MIAMI-DADE COUNTY
PRODUCT CONTROL SECTION
11805 SW 26 Street, Room 208
Miami, Florida 33175-2474
T (786) 315-2590 F (786) 315-2599
www.miamidade.gov/economy

DEPARTMENT OF REGULATORY AND ECONOMIC RESOURCES (RER)
BOARD AND CODE ADMINISTRATION DIVISION

# NOTICE OF ACCEPTANCE (NOA)

**Stanley Access Technologies, LLC**
**65 Scott Swamp Road**
**Farmington, CT 06032**

**SCOPE:**

This NOA is being issued under the applicable rules and regulations governing the use of construction materials. The documentation submitted has been reviewed and accepted by Miami-Dade County RER -Product Control Section to be used in Miami Dade County and other areas where allowed by the Authority Having Jurisdiction (AHJ).

This NOA shall not be valid after the expiration date stated below. The Miami-Dade County Product Control Section (In Miami Dade County) and/or the AHJ (in areas other than Miami Dade County) reserve the right to have this product or material tested for quality assurance purposes. If this product or material fails to perform in the accepted manner, the manufacturer will incur the expense of such testing and the AHJ may immediately revoke, modify, or suspend the use of such product or material within their jurisdiction. RER reserves the right to revoke this acceptance, if it is determined by Miami-Dade County Product Control Section that this product or material fails to meet the requirements of the applicable building code.

This product is approved as described herein, and has been designed to comply with the Florida Building Code, including the High Velocity Hurricane Zone.

**DESCRIPTION: Series "Dura Storm" Aluminum Automatic Sliding Glass Door : O-Sx-Sx-O, O-Sx and So-Sx-Sx-So, So-Sx w/ Operable Panels w/ Full Breakout-LMI**

**APPROVAL DOCUMENT:** Drawing No. **12-SAT-13**, titled "Dura-Storm 2000/3000 Auto SGD, Bi-Parting/Single Slide-LMI", sheets 1 thru 12 of 12 prepared by Engineering Express, dated 07-01-12 and last revised on 10/22/2013, signed and sealed by Frank L. Bennardo, P.E., bearing the Miami-Dade County Product Control Approval stamp with the Notice of Acceptance number and approval date by the Miami-Dade County Product Control Section.

**MISSILE IMPACT RATING: Large and Small Missile Impact**

**LIMITATIONS:**

1. See elevation for anchors requirements in sheet **1** and Header clusters details in sheet **5** and Threshold clusters in sheet **9**. See sheets **2** & **3** for concealed 3-point locking (active panel) & 2-point (in-active). Also see applicable 2-point **G-86** CVR panic devices (active/inactive panels) for series **3000** in sheets **3** & **4** to be used w/ Horizontal muntin bars (detail V, sheet 12) and DLO height not to exceed 36-3/4" max.
2. Not approved where water infiltration is required. Fixed glass more than 36" wide must be supported with approved setting blocks per FBC requirements.
3. Electrical devices, functions and installation is not part of this approval and to be reviewed and approved by Authority Having Jurisdiction (AHJ)

**LABELING:** Each unit shall bear a permanent label with the manufacturer's name or logo, city, state and series and following statement: "Miami-Dade County Product Control Approved", noted herein.

**RENEWAL** of this NOA shall be considered after a renewal application has been filed and there has been no change in the applicable building code negatively affecting the performance of this product.

**TERMINATION** of this NOA will occur after the expiration date or if there has been a revision or change in the materials, use, and/or manufacture of the product or process. Misuse of this NOA as an endorsement of any product, for sales, advertising or any other purposes shall automatically terminate this NOA. Failure to comply with any section of this NOA shall be cause for termination and removal of NOA.

**ADVERTISEMENT:** The NOA number preceded by the words Miami-Dade County, Florida, and followed by the expiration date may be displayed in advertising literature. If any portion of the NOA is displayed, then it shall be done in its entirety.

MIAMI-DADE COUNTY APPROVED

10/23/13

**INSPECTION:** A copy of this entire NOA shall be provided to the user by the manufacturer or its distributors and shall be available for inspection at the job site at the request of the Building Official.

This NOA revises NOA # **12-0807.03** consists of the pages 1& 2 and evidence pages E-1 & E-2, as well as approval document mentioned above.

The submitted documentation was reviewed by **Ishaq I. Chanda, P.E.**

MIAMI-DADE COUNTY APPROVED

10/23/13

# NOTICE OF ACCEPTANCE: EVIDENCE SUBMITTED

## A. DRAWINGS

1. Manufacturer's die drawings and sections (submitted under file **#12-0807.03**).
2. Drawing No. **12-SAT-13**, titled "Dura-Storm 2000/3000 Auto SGD, Bi-Parting/Single Slide-LMI", sheets 1 thru 12 of 12 prepared by Engineering Express, dated 07-01-12 and last revised on 10/22/2013, signed and sealed by Frank L. Bennardo, P.E.

## B. TESTS

1. Test reports on: 1) Air Infiltration Test, per FBC, TAS 202-94
   2) Uniform Static Air Pressure Test, Loading per FBC TAS 202-94
   3) Water Resistance Test, per FBC, TAS 202-94 (Not conducted)
   4) Large Missile Impact Test per FBC, TAS 201-94
   5) Cyclic Wind Pressure Loading per FBC, TAS 203-94
   6) Forced Entry Test, per FBC 2411 3.2.1, TAS 202-94

   Along with installation diagram of aluminum automatic entrance doors Sx-So w/ G-86 CVR Panic (TAS 202, 201/203-94) and So-Sx-Sx-So w/ Transom & G-86 CVR Panic (TAS 202), prepared by Fenestration Testing Laboratory, Inc. Test Report No. **FTL-7247,** dated 3/08/13, signed and sealed by Marlin D. Brinson, P. E
2. Test reports on: 1) Air Infiltration Test, per FBC, TAS 202-94
   2) Uniform Static Air Pressure Test, Loading per FBC TAS 202-94
   3) Water Resistance Test, per FBC, TAS 202-94 (Not conducted)
   4) Large Missile Impact Test per FBC, TAS 201-94
   5) Cyclic Wind Pressure Loading per FBC, TAS 203-94
   6) Forced Entry Test, per FBC 2411 3.2.1, TAS 202-94

   Along with installation diagram of aluminum automatic entrance doors, prepared by Fenestration Testing Laboratory, Inc. Test Report No. **FTL-6803,** dated 05/11/12 and last revised on 03-21-13, signed and sealed by Marlin D. Brinson, P. E.
   Note: This test report has been revised by an addendum letter dated Nov 21, 2012, issued by Fenestration Testing Lab, signed and sealed by Marlin D. Brinson, P. E. (submitted under file **#12-0807.03**)

## C. CALCULATIONS (submitted under file **#12-0807.03**)

1. Anchor verification calculations and structural analysis, complying with FBC-2010, prepared by Engineering Express, dated 08-02-12, signed and sealed by Frank L. Bennardo, P.E.
2. Glazing complies w/ ASTME-1300-02 & -04.

## QUALITY ASSURANCE

1. Miami Dade Department of Regulatory and Economic Resources (RER).

## D. MATERIAL CERTIFICATIONS

1. Notice of Acceptance No. **12-1213.04** issued to SAF-GLAS, L.L.C. for "**SAF GLAS, Polycarbonate laminate**", expiring on 12/16/13.
2. Notice of Acceptance No. **11-0624.01** issued to E.I. DuPont DeNemours & Co., Inc. for their "**DuPont PVB Butacite ®**", expiring on 12/11/16.
3. Technical strength data of Trelleborg EPDM per ASTM C864.

Ishaq I. Chanda

**Ishaq I. Chanda, P.E.**
**Product Control Examiner**
**NOA No. 13-0529.23**
**Expiration Date: April 04, 2018**
**Approval Date: October 31, 2013**

## NOTICE OF ACCEPTANCE: EVIDENCE SUBMITTED

### E. STATEMENTS

1. Statement letter of conformance to FBC 2010, prepared by Engineering Express, dated May 17, 2013, signed and sealed by Frank L. Bennardo, P.E
2. Statement letter of conformance and letter of no financial interest, prepared by Engineering Express, dated 08-02-12, signed and sealed by Frank L. Bennardo, P.E.
3. Lab compliance as part of the above referenced test report.

### G. OTHER

1. This NOA **revises** NOA **#12-0807.03**, expiring 04/18/18.
2. Test proposals # 13-0006 dated 01/14/13 approved by RER and # 11-1016, dated NOV 11, 2011 approved by PERA.
3. Manufacture supplied Adam Rites deadbolt/hook, bolts mechanism and G-86 panic exit device brochures.

Ishaq I. Chanda

**Ishaq I. Chanda, P.E.**
**Product Control Examiner**
**NOA No. 13-0529.23**
**Expiration Date: April 04, 2018**
**Approval Date: October 31, 2013**

# DURA-STORM SERIES 2000/3000 TYPICAL ELEVATIONS

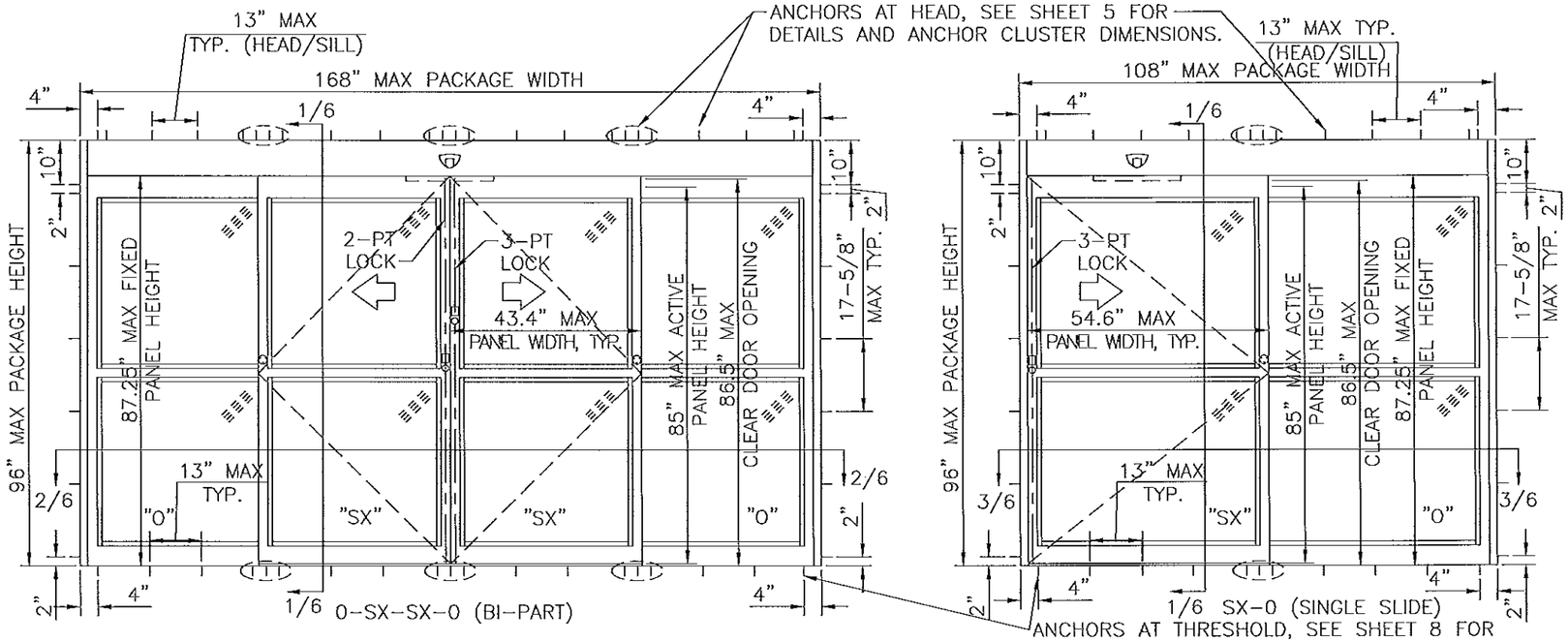


DURA-STORM 2000 TYPICAL ELEVATIONS

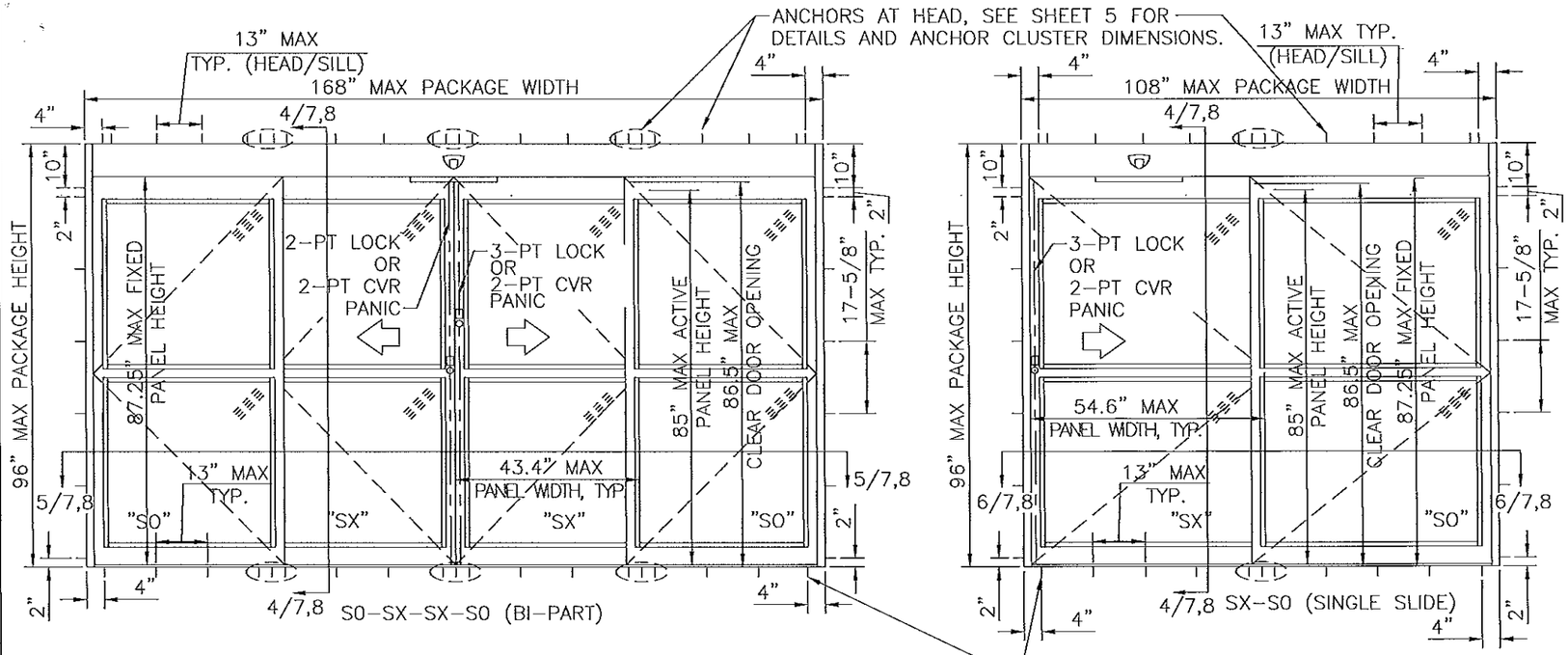


DURA-STORM 3000 TYPICAL ELEVATIONS

GENERAL NOTES

1. DOORS HAVE BEEN TESTED & DESIGNED IN ACCORDANCE WITH THE REQUIREMENTS OF THE 2010 FLORIDA BUILDING CODE HIGH VELOCITY HURRICANE ZONE (HVHZ) AND MIAMI-DADE COUNTY PROTOCOLS TAS 201 FOR LARGE MISSILE IMPACT, TAS 202 FOR UNIFORM STATIC AIR PRESSURE AND TAS 203 FOR CYCLIC WIND LOADING.
2. PERMIT HOLDER SHALL VERIFY THE ADEQUACY OF THE EXISTING STRUCTURE TO WITHSTAND ADDITIONAL IMPOSED LOADS. 1X OR 2X WOOD BUCKS BY OTHERS SHALL BE ANCHORED PROPERLY TO TRANSFER LOADS TO THE EXISTING STRUCTURE.
3. NO INCREASE IN ALLOWABLE STRESS HAS BEEN USED IN THE DESIGN OF THESE PRODUCTS. WIND LOAD DURATION FACTOR Cd = 1.6 WAS USED FOR WOOD ANCHOR DESIGN.
4. POSITIVE AND NEGATIVE DESIGN PRESSURES CALCULATED FOR USE WITH THIS SYSTEM SHALL BE DETERMINED PER SEPARATE ENGINEERING IN ACCORDANCE WITH THE GOVERNING CODE. PRESSURE REQUIREMENTS AS DETERMINED IN ACCORDANCE WITH ASCE 7 AND CHAPTER 1609 OF THE FLORIDA BUILDING CODE SHALL BE LESS THAN OR EQUAL TO THE POSITIVE OR NEGATIVE DESIGN PRESSURE CAPACITY VALUES LISTED HEREIN FOR ANY ASSEMBLY AS SHOWN.
5. DESIGN PRESSURES NOTED HEREIN ARE BASED ON MAXIMUM TESTED PRESSURES DIVIDED BY A 1.5 SAFETY FACTOR.
6. DOORS DETAILED HEREIN HAVE BEEN DESIGNED AND TESTED TO THE MAXIMUM SPANS AND LOADS SHOWN ON THESE DRAWINGS REFERENCE FENESTRATION TESTING LAB REPORTS 6803 & 7247.
7. ANCHORS SHALL BE INSTALLED PER MANUFACTURER'S SPECIFICATIONS, SPACED AS NOTED HEREIN. MINIMUM EMBEDMENT AND EDGE DISTANCE EXCLUDES STUCCO, FOAM, BRICK, AND OTHER WALL FINISHES.
8. WHERE EXISTING STRUCTURE IS WOOD FRAMING, EXISTING CONDITIONS MAY VARY. FIELD VERIFY THAT FASTENERS ARE INTO ADEQUATE WOOD FRAMING MEMBERS, NOT INTO PLYWOOD.
9. WOOD HOST STRUCTURE SHALL BE "SOUTHERN PINE" G=0.55 OR GREATER DENSITY.
10. WHERE EXISTING STRUCTURE IS WOOD FRAMING, EXISTING CONDITIONS MAY VARY. FIELD VERIFY THAT FASTENERS ARE INTO ADEQUATE WOOD FRAMING MEMBERS, NOT INTO PLYWOOD.
11. THE SYSTEM DETAILED HEREIN IS GENERIC AND DOES NOT PROVIDE INFORMATION FOR A SPECIFIC SITE. FOR SITE CONDITIONS DIFFERENT FROM THE CONDITIONS DETAILED HEREIN, A LICENSED ENGINEER OR REGISTERED ARCHITECT SHALL PREPARE SITE SPECIFIC DOCUMENTS FOR USE IN CONJUNCTION WITH THIS DOCUMENT FOR INSTALLATIONS OUTSIDE THE HVHZ; WITHIN THE HVHZ, A ONE-TIME APPROVAL FROM MIAMI-DADE COUNTY SHALL BE OBTAINED.
12. ALL BOLTS AND WASHERS SHALL BE ZINC COATED, GALVANIZED, OR STAINLESS STEEL WITH A MINIMUM TENSILE STRENGTH OF 60 KSI, EXCEPT INSTALLATION ANCHORS.
13. ALL SINGLE SLIDE ENTRANCES ARE SHOWN "RIGHT HAND"; "LEFT HAND" IS MIRROR IMAGE.

**PRODUCT REVISED**
**to comply with the Florida Building Code**
**Acceptance No.** 10-0529.23
**Expiration Date** APR 04, 2018
**By** [signature]
**Miami-Dade Product Control**

SYSTEM NOTES

1. ALL ALUMINUM PARTS SHALL BE 6063-T6 ALUMINUM ALLOY AND TEMPER, UNLESS OTHERWISE NOTED.
2. GLAZING 9/16" LAMINATED IMPACT RATED (SEE GLAZING DETAILS SHEET 12)
3. CORNER PANEL CONSTRUCTION: PANEL CORNERS ARE BUTT JOINED, SECURED WITH FOUR (4) FULL WIDTH 5/16" THREADED TIE RODS AT TOP RAIL, INTERMEDIATE HORIZONTAL MUNTIN BAR, AND BOTTOM RAIL. ALL JOINTS ARE WELDED. EXCEPTION: WHEN PANIC EXIT DEVICE IS INSTALLED, CORRESPONDING 4 1/4" MUNTIN BAR IS SECURED BY APPROVED CLIPS. (ITEM #79, SHEET 12, DETAIL V)
4. THE GLAZING MATERIAL IN BOTH FIXED AND SLIDING PANELS OF ALL SLIDING DOORS MUST COMPLY WITH THE REQUIREMENTS IN THE PERFORMANCE SPECIFICATIONS AND METHODS OF TEST FOR SAFETY GLAZING MATERIALS USED IN BUILDINGS, PER FBC REQUIREMENTS.
5. CVR = CONCEALED VERTICAL ROD.

FRANK L. BENNARDO, P.E.
LICENSE NO. 46548
STATE OF FLORIDA
PROFESSIONAL ENGINEER
10/22/2013


FRANK L. BENNARDO, P.E.
CERT OF AUTH #00016549
ENGINEERING EXPRESS®
160 SW 12th AVENUE, #186
DEERFIELD BEACH, FL 33442
PH: (954) 354-0660 FAX: (954) 354-0443
WWW.ENGEXP.COM
CERT OF AUTH #0685
A. FRANK L. BENNARDO, P.E., INC. INNOVATION


**STANLEY**
ACCESS TECHNOLOGIES
65 SCOTT SWAMP ROAD, FARMINGTON, CT 06032

SERIES "DURA-STORM 2000/3000" AUTO SGD
BI-PARTING/SINGLE SLIDE (LMI)
MIAMI-DADE NOTICE OF ACCEPTANCE

| REMARKS | DRWN | CHKD | DATE |
|---|---|---|---|
| INIT ISSUE | KL | FLB | 07/01/12 |
| REVIEWER COMMENT | KL | FLB | 11/26/12 |
| ADD'L COMMENTS | KL | FLB | 01/28/13 |
| ADD'L COMMENTS | KL | FLB | 03/22/13 |
| ADD'L COMMENTS | KL | FLB | 04/01/13 |
| REV. PER TESTING | KL | FLB | 05/17/13 |
| ADD'L COMMENTS | KL | FLB | 08/07/13 |
| ADD'L COMMENTS | KL | FLB | 10/02/13 |

12-SAT-13

SCALE: - 07

PAGE DESCRIPTION:
-
-

14

1

# DURA-STORM SERIES 2000 ELEVATION AND PLAN

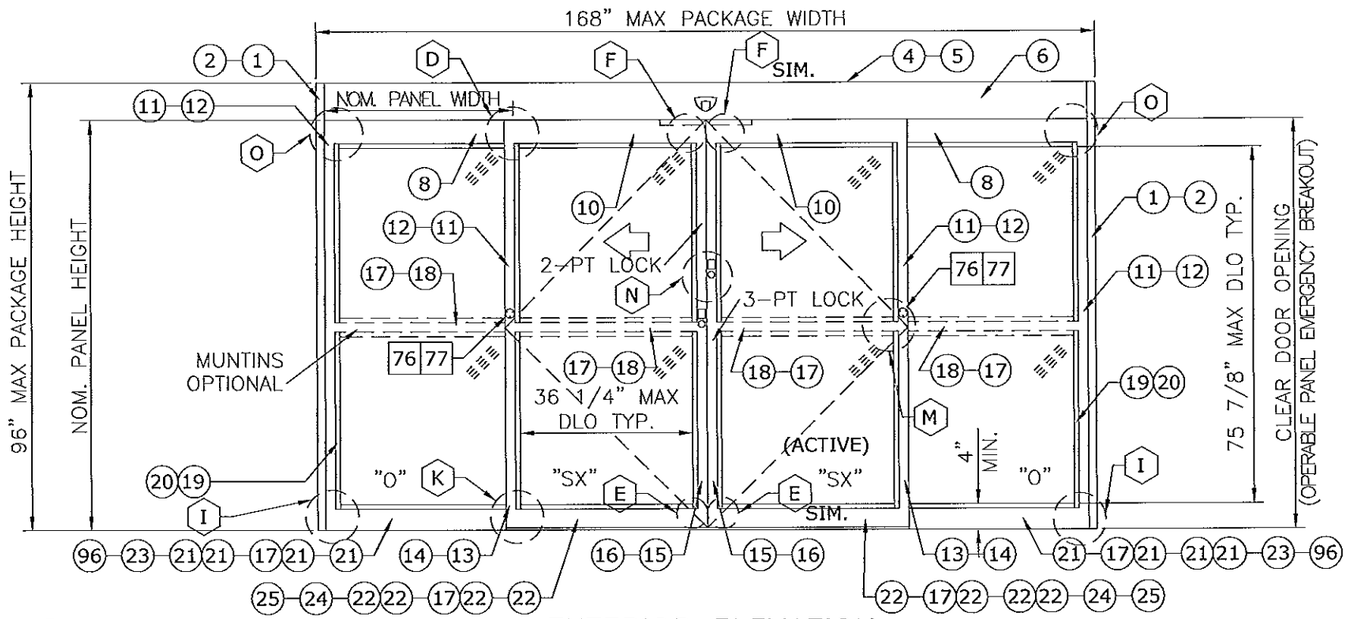


EXTERIOR ELEVATION

(XX) : EXTRUSION
(XX)(XX) : EXTRUSION, MULTI-PIECE
(XX)-(XX) : EXTRUSION, OPTION
[XX] : PART
[XX][XX] : PART, MULTI-PIECE
[XX]-[XX] : PART, OPTION
⟨XX⟩ : DETAIL
⟨XX⟩-⟨XX⟩ : DETAIL, OPTION

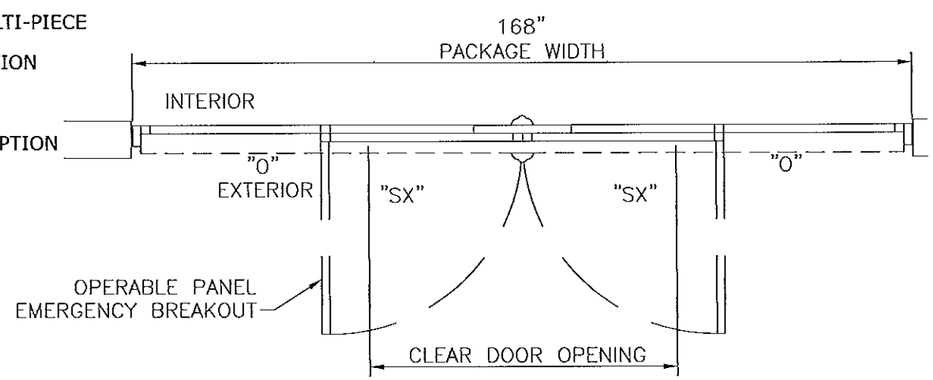


PLAN

NOTES
1. TYPICAL DOOR SHOWN. STILE, RAIL AND MUNTIN OPTIONS AVAILABLE AS INDICATED.
2. HORIZONTAL MUNTIN BAR NOT REQUIRED AS INDICATED BY DASHED LINES. MAX DLO: 36 1/4" W X 75 3/4" H AS SHOWN
3. 5-POINT LOCKING STANDARD (3-PT ACTIVE & 2-PT). SEE SHEET 13.
4. PRODUCT SHALL BE MANUFACTURED AND INSTALLED IN ACCORDANCE WITH PRODUCT APPROVALS.
5. SEE SHEETS 5, 6 AND 9 FOR REQUIRED ANCHORAGE.
6. SEE SHEET 12 FOR GLAZING DETAILS.

| DESIGN RATINGS | | |
|---|---|---|
| MISSILE IMPACT RATING | | |
| ☒ | LARGE AND SMALL MISSILE IMPACT | |
| | | |
| DESIGN PRESSURE RATING (PSF[Pa]) | | |
| | WHERE WATER INFILTRATION RATING IS REQUIRED | WHERE WATER INFILTRATION RATING IS NOT REQUIRED |
| POSITIVE | NOT APPROVED | 75 PSF |
| NEGATIVE | NOT APPROVED | 75 PSF |

SERIES 2000 BI-PART AVAILABLE PACKAGE WIDTH INFORMATION

| PACKAGE WIDTH | ROUGH OPENING | STILE TYPE | NOMINAL CLEAR DOOR OPENING | NOMINAL PANEL WIDTH (SX) | NOMINAL PANEL WIDTH (O) | CAULKING ALLOWANCE |
|---|---|---|---|---|---|---|
| 168.0" | 168.5" | NARROW | 70.6" | 42.7" | 42.7" | 1/4" / SIDE |
| 168.0" | 168.5" | MEDIUM | 66.3" | 43.4" | 43.4" | 1/4" / SIDE |

SERIES 2000 BI-PART AVAILABLE PACKAGE HEIGHT INFORMATION

| PACKAGE HEIGHT | ROUGH OPENING | NOMINAL CLEAR DOOR OPENING | CAULKING ALLOWANCE |
|---|---|---|---|
| 96.0" | 96.3" | 86.5" | 1/4" TOP |

PRODUCT REVISED
as complying with the Florida
Building Code
Acceptance No 13-0529.23
Expiration Date 4/4/18
By
Miami Dade Product Control

FRANK L. BENNARDO
FRANK L. BENNARDO, P.E.
# PE0046549
No. 46549
10/22/2013
STATE OF FLORIDA
PROFESSIONAL ENGINEER


ENGINEERING EXPRESS®
160 SW 12th AVENUE, #1103
DEERFIELD BEACH, FL 33442
Ph: (954) 354-0660 Fax: (954) 354-0443
WWW.ENGEXP.COM
CERT OF AUTH #9885
A FRANK L. BENNARDO, P.E., INC. INNOVATION


STANLEY
ACCESS TECHNOLOGIES
65 SCOTT SWAMP ROAD, FARMINGTON, CT 06032

SERIES "DURA-STORM 2000/3000" AUTO SGD
BI-PARTING/SINGLE SLIDE (LM1)
MIAMI-DADE NOTICE OF ACCEPTANCE

| REMARKS | DRWN | CH'KD | DATE |
|---|---|---|---|
| INIT ISSUE | KL | FLB | 07/01/12 |
| REVIEWER COMMENT | KL | FLB | 11/28/12 |
| ADD'L COMMENTS | KL | FLB | 01/28/13 |
| ADD'L COMMENTS | KL | FLB | 03/22/13 |
| ADD'L COMMENTS | KL | FLB | 04/01/13 |
| REV. PER TESTING | KL | FLB | 05/17/13 |
| ADD'L COMMENTS | KL | FLB | 08/07/13 |
| ADD'L COMMENTS | KL | FLB | 10/03/13 |

12-SAT-13
SCALE: - 07
PAGE DESCRIPTION:
-
-

# DURA-STORM SERIES 3000 ELEVATION AND PLAN

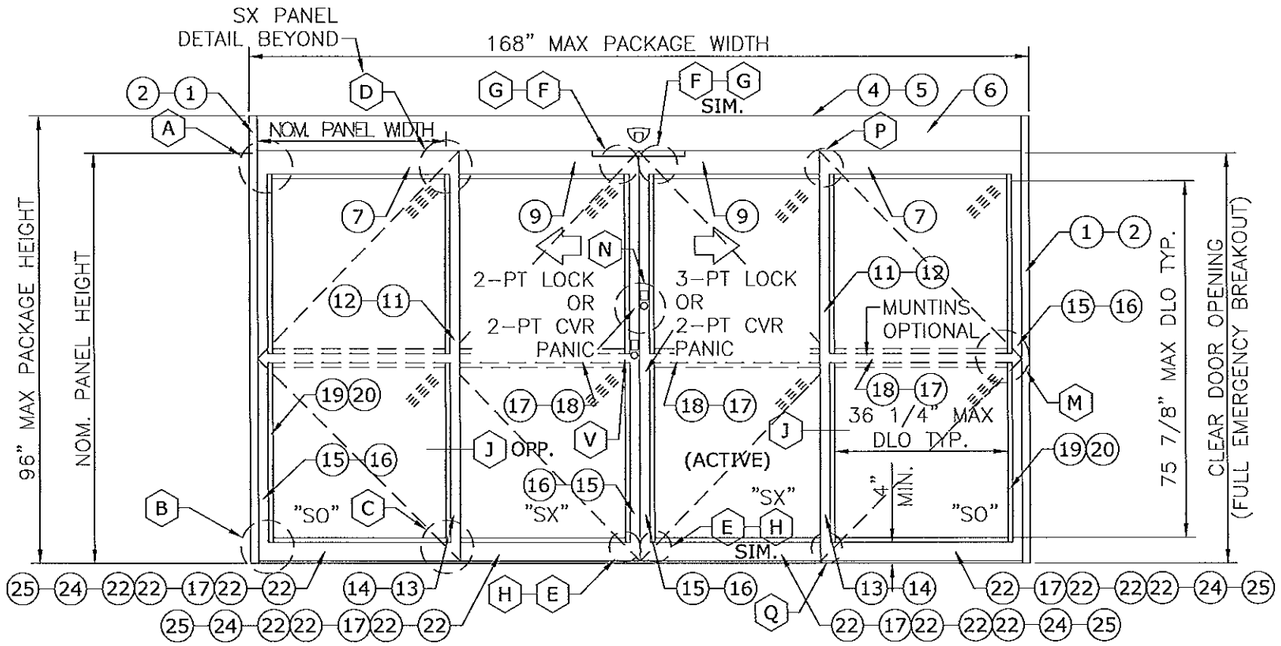


EXTERIOR ELEVATION

(XX) : EXTRUSION

(XX)(XX) : EXTRUSION, MULTI-PIECE

(XX)-(XX) : EXTRUSION, OPTION

[XX] : PART

[XX][XX] : PART, MULTI-PIECE

[XX]-[XX] : PART, OPTION

(XX) : DETAIL

(XX)-(XX) : DETAIL, OPTION

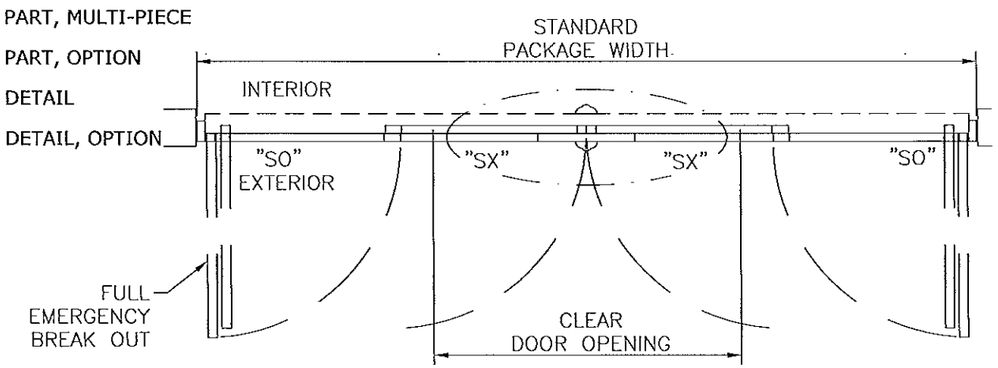


PLAN

| DESIGN RATINGS | | |
|---|---|---|
| MISSILE IMPACT RATING | | |
| ☒ | LARGE AND SMALL MISSILE IMPACT | |
| | | |
| DESIGN PRESSURE RATING (PSF[Pa]) | | |
| | WHERE WATER INFILTRATION RATING IS REQUIRED | WHERE WATER INFILTRATION RATING IS NOT REQUIRED |
| POSITIVE | NOT APPROVED | 75 PSF |
| NEGATIVE | NOT APPROVED | 75 PSF |

| SERIES 3000 BI-PART AVAILABLE PACKAGE WIDTH INFORMATION | | | | | | |
|---|---|---|---|---|---|---|
| PACKAGE WIDTH | ROUGH OPENING | STILE TYPE | NOMINAL CLEAR DOOR OPENING | NOMINAL PANEL WIDTH (SX) | NOMINAL PANEL WIDTH (O) | CAULKING ALLOWANCE |
| 168.0" | 168.5" | NARROW | 70.6" | 42.7" | 42.7" | 1/4" / SIDE |
| 168.0" | 168.5" | MEDIUM | 66.3" | 43.4" | 43.4" | 1/4" / SIDE |

| SERIES 3000 BI-PART AVAILABLE PACKAGE HEIGHT INFORMATION | | | |
|---|---|---|---|
| PACKAGE HEIGHT | ROUGH OPENING | NOMINAL CLEAR DOOR OPENING | CAULKING ALLOWANCE |
| 96.0" | 96.3" | 86.5" | 1/4" TOP |

PRODUCT REVISED
as complying with the Florida
Building Code
Acceptance No. 13-0329.23
Expiration Date 4/14/18
By
Miami-Dade Product Control

NOTES
1. TYPICAL DOOR SHOWN. STILE, RAIL AND MUNTIN OPTIONS AVAILABLE AS INDICATED.
2. HORIZONTAL MUNTIN BAR NOT REQUIRED EXCEPT AT PANIC DEVICE, AS INDICATED BY DASHED LINES. MAX DLO: 36 1/4" W X 75 3/4" H AS SHOWN; 36 3/4" H WITH PANIC DEVICE MUNTIN.
3. 4-POINT CVR LOCKING WITH G86 PANIC RELEASE (2-PT CVR ACTIVE & 2-PT CVR) AND 5-POINT LOCKING (3-PT ACTIVE & 2-PT) AVAILABLE. SEE SHEET 13.
4. PRODUCT SHALL BE MANUFACTURED AND INSTALLED IN ACCORDANCE WITH PRODUCT APPROVALS.
5. SEE SHEETS 5, 7, 8, AND 9 FOR REQUIRED ANCHORAGE.
6. SEE SHEET 12 FOR GLAZING DETAILS.


FRANK L. BENNARDO, P.E.
#PE0046549
STATE OF FLORIDA
10/22/2013
ENGINEERING EXPRESS
160 SW 12th AVENUE, #106
DEERFIELD BEACH, FL 33442
Ph: (954) 354-0660 Fax: (954) 354-0443
WWW.ENGEXP.COM
CERT OF AUTH #9885
A. FRANK L. BENNARDO, P.E., INC. INNOVATION


STANLEY
ACCESS TECHNOLOGIES
65 SCOTT SWAMP ROAD, FARMINGTON, CT 06032

SERIES "DURA-STORM 2000/3000" AUTO SGD
BI-PARTING/SINGLE SLIDE (LMI)
MIAMI-DADE NOTICE OF ACCEPTANCE

| REMARKS | DRWN | CHKD | DATE |
|---|---|---|---|
| INIT ISSUE | KL | FLB | 07/01/12 |
| REVIEWER COMMENT | KL | FLB | 11/26/12 |
| ADD'L COMMENTS | KL | FLB | 01/28/13 |
| ADD'L COMMENTS | KL | FLB | 03/22/13 |
| ADD'L COMMENTS | KL | FLB | 04/01/13 |
| REV. PER TESTING | KL | FLB | 05/17/13 |
| ADD'L COMMENTS | KL | FLB | 08/07/13 |
| ADD'L COMMENTS | KL | FLB | 10/03/13 |

12-SAT-13

SCALE: - 07

PAGE DESCRIPTION:
-
-

# DURA-STORM SERIES 2000/3000 SINGLE SLIDES, ELEVATION AND PLAN

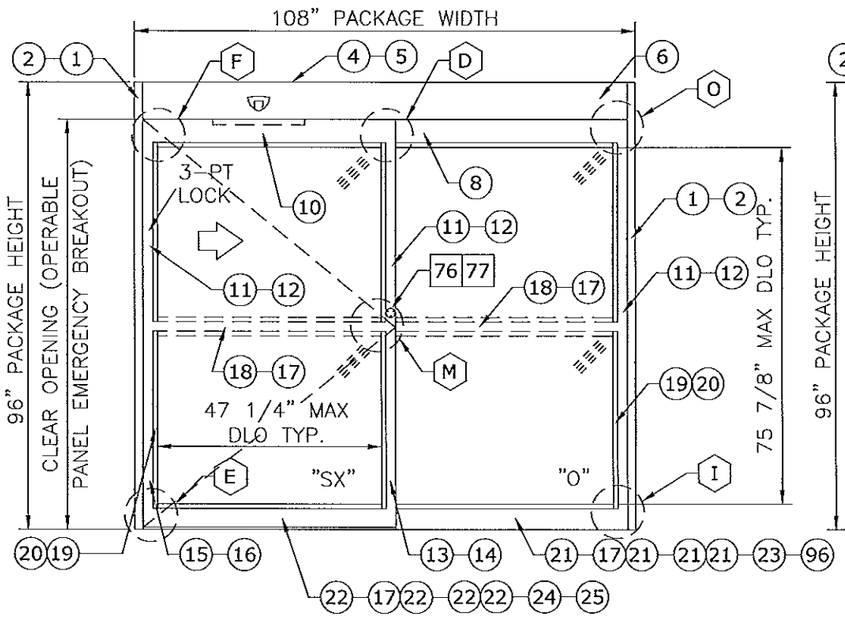


SERIES 2000 (SX-O) SINGLE SLIDE
EXTERIOR ELEVATION

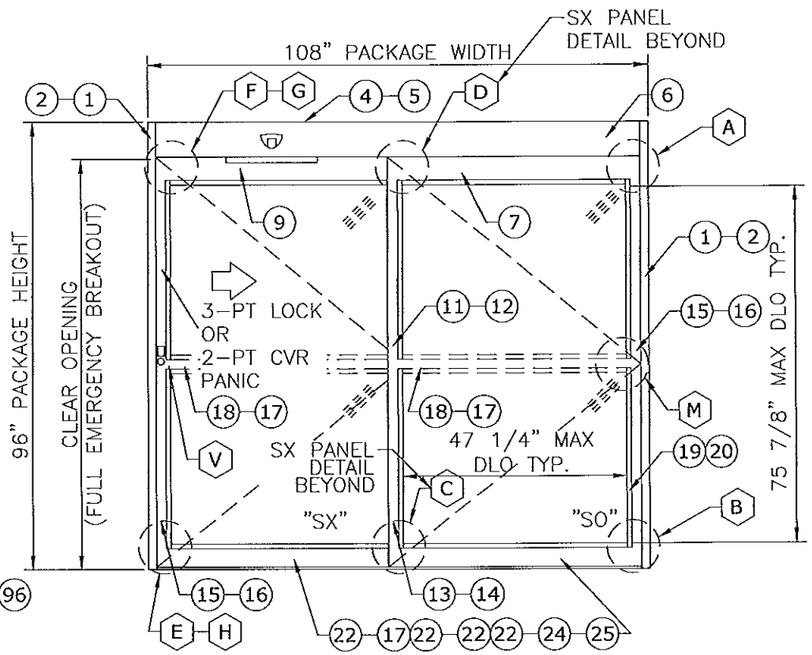


SERIES 3000 (SX-SO) SINGLE SLIDE
EXTERIOR ELEVATION

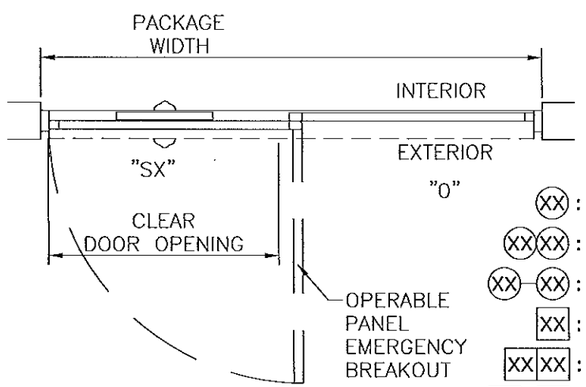


SERIES 2000 (SX-O) SINGLE SLIDE
PLAN

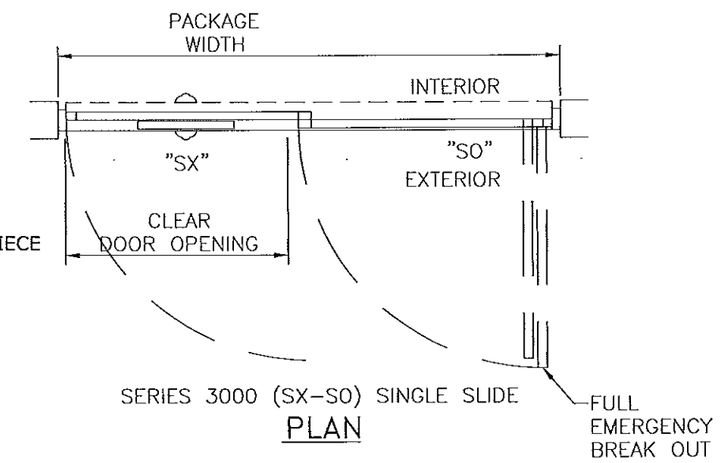


SERIES 3000 (SX-SO) SINGLE SLIDE
PLAN

(XX) : EXTRUSION
(XX)(XX) : EXTRUSION, MULTI-PIECE
(XX)-(XX) : EXTRUSION, OPTION
[XX] : PART
[XX][XX] : PART, MULTI-PIECE
[XX]-[XX] : PART, OPTION
⟨XX⟩ : DETAIL
⟨XX⟩-⟨XX⟩ : DETAIL, OPTION

| DESIGN RATINGS | | |
|---|---|---|
| MISSILE IMPACT RATING | | |
| ☒ | LARGE AND SMALL MISSILE IMPACT | |
| DESIGN PRESSURE RATING (PSF[Pa]) | | |
| | WHERE WATER INFILTRATION RATING IS REQUIRED | WHERE WATER INFILTRATION RATING IS NOT REQUIRED |
| POSITIVE | NOT APPROVED | 75 PSF |
| NEGATIVE | NOT APPROVED | 75 PSF |

SERIES 2000 AND 3000 SINGLE SLIDE AVAILABLE PACKAGE WIDTH INFORMATION

| PACKAGE WIDTH | ROUGH OPENING | STILE TYPE | NOMINAL CLEAR DOOR OPENING | NOMINAL PANEL WIDTH (SX) | NOMINAL PANEL WIDTH (O) | CAULKING ALLOWANCE |
|---|---|---|---|---|---|---|
| 108.0" | 108.5" | NARROW | 46.4" | 53.8" | 53.8" | 1/4" / SIDE |
| 108.0" | 108.5" | MEDIUM | 44.3" | 54.6" | 54.6" | 1/4" / SIDE |

SERIES 2000 AND 3000 SINGLE SLIDE AVAILABLE PACKAGE HEIGHT INFORMATION

| PACKAGE HEIGHT | ROUGH OPENING | NOMINAL CLEAR DOOR OPENING | CAULKING ALLOWANCE |
|---|---|---|---|
| 96.0" | 96.3" | 86.5" | 1/4" TOP |

NOTES
1. TYPICAL DOOR SHOWN. STILE, RAIL AND MUNTIN OPTIONS AVAILABLE AS INDICATED.
2. HORIZONTAL MUNTIN BAR NOT REQUIRED EXCEPT AT PANIC DEVICE AS INDICATED BY DASHED LINES. MAX DLO: 47 1/4" W X 76" H AS SHOWN; 36 3/4" H WITH PANIC DEVICE MUNTIN.
3. 2-POINT CVR LOCKING WITH G86 PANIC RELEASE AND 3-POINT LOCKING AVAILABLE ON SERIES 3000. 3-POINT ONLY ON SERIES 2000. SEE SHEET 13.
4. PRODUCT SHALL BE MANUFACTURED AND INSTALLED IN ACCORDANCE WITH PRODUCT APPROVALS.
5. SEE SHEETS 5, 7, 8 AND 9 FOR REQUIRED ANCHORAGE.
6. SEE SHEET 12 FOR GLAZING DETAILS.

PRODUCT REVISED
as complying with the Florida Building Code
Acceptance No. 13-0529.23
Expiration Date 4/4/13
By
Miami Dade Product Control

FRANK L. BENNARDO, P.E. #PE0046649
LICENSE No. 46649 STATE OF FLORIDA PROFESSIONAL ENGINEER
10/22/2013


ENGINEERING EXPRESS
160 SW 12th AVENUE, SUITE 104
DEERFIELD BEACH, FL 33442
Ph: (954) 354-0660 Fax: (954) 354-0443
WWW.ENGEXP.COM
CERT OF AUTH #9885
A. FRANK L. BENNARDO, P.E., INC. INNOVATION


STANLEY
ACCESS TECHNOLOGIES
65 SCOTT SWAMP ROAD, FARMINGTON, CT 06032

SERIES "DURA-STORM 2000/3000" AUTO SGD
BI-PARTING/SINGLE SLIDE (LMI)
MIAMI-DADE NOTICE OF ACCEPTANCE

| REMARKS | DRWN | CHK'D | DATE |
|---|---|---|---|
| INIT ISSUE | KL | FLB | 07/01/12 |
| REVIEWER COMMENT | KL | FLB | 11/26/12 |
| ADD'L COMMENTS | KL | FLB | 01/28/13 |
| ADD'L COMMENTS | KL | FLB | 03/22/13 |
| ADD'L COMMENTS | KL | FLB | 04/01/13 |
| REV. PER TESTING | KL | FLB | 05/17/13 |
| ADD'L COMMENTS | KL | FLB | 08/07/13 |
| ADD'L COMMENTS | KL | FLB | 10/03/13 |

12-SAT-13
SCALE: - 07
PAGE DESCRIPTION:
-
-

# DURA-STORM SERIES 2000/3000 HEADER ANCHORING

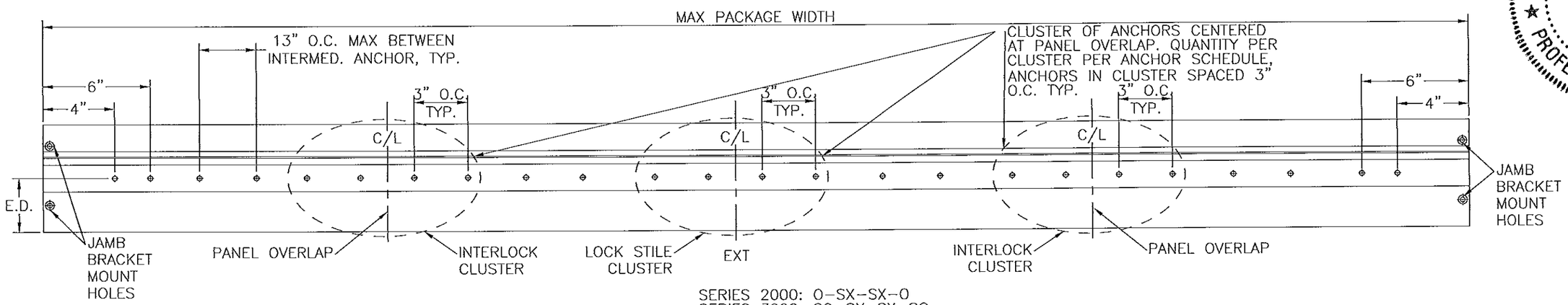


SERIES 2000: O–SX–SX–O
SERIES 3000: SO–SX–SX–SO

## HEADER ANCHORING

N.T.S. BI–PARTING

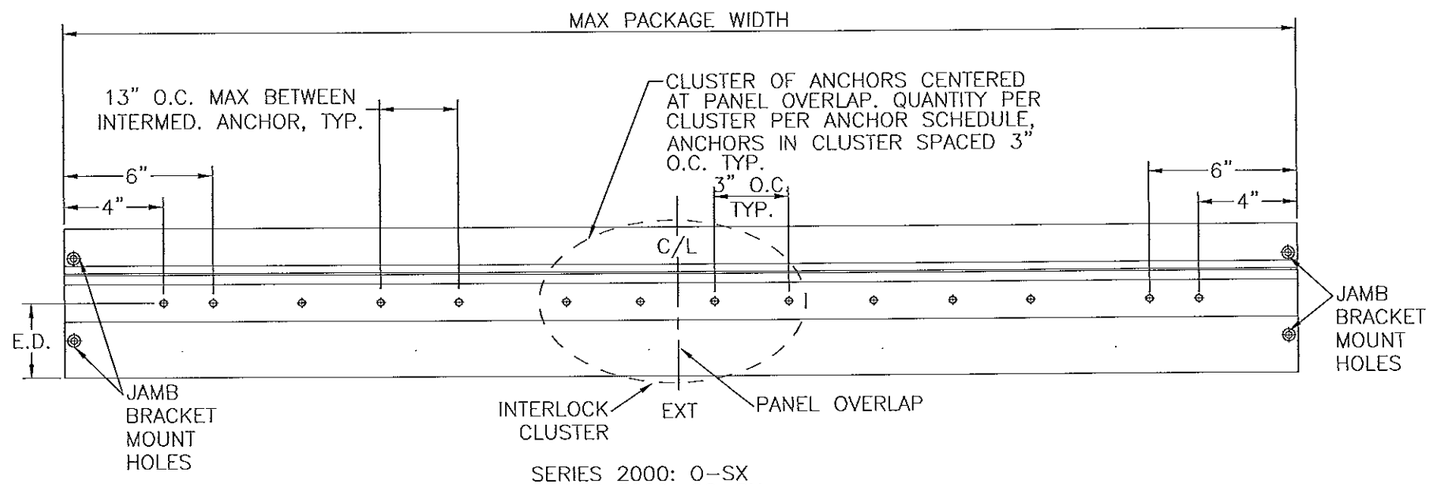


SERIES 2000: O–SX
SERIES 3000: SO–SX

## HEADER ANCHORING

N.T.S. SINGLE SLIDE

SEE JAMB ANCHORS SHEETS 6 THROUGH 8, AND THRESHOLD ANCHORS SHEET 8. THRESHOLD ANCHORS APPLICABLE ONLY TO 3KSI CONCRETE.

**ANCHOR SCHEDULE**

| HOST STRUCTURE | ANCHOR | EMBEDMENT | EDGE DISTANCE | NUMBER OF ANCHORS PER INTERLOCK/LOCK STILE CLUSTER | | | | MAX INTERMEDIATE ANCHOR SPACING ALONG HEAD & THRESHOLD | MAX ANCHOR SPACING ALONG JAMBS |
|---|---|---|---|---|---|---|---|---|---|
| | | | | HEAD | | THRESHOLD | | | |
| | | | | SINGLE SLIDE | BI-PART | SINGLE SLIDE | BI-PART | | |
| 3KSI MIN. CONCRETE | 1/4" POWERS/RAWL PERMASEAL TAPPER | 1-1/2" | 3" | 4 | 4 | 6 | 6 | 13" O.C. MAX | 17-5/8" O.C. MAX |
| 3/16" MIN. A36 STEEL | 1/4-20 SAE GR. 5 SMS | FULL THREAD ENGAGEMENT | 1/2" | 4 | 4 | N/A | N/A | 13" O.C. MAX | 17-5/8" O.C. MAX |
| G=0.55 MIN. WOOD | #14 WOOD SCREW | 2" | 3/4" | 4 | 4 | N/A | N/A | 13" O.C. MAX | 17-5/8" O.C. MAX |
| 1/8" MIN. 6063-T5 ALUM. | #14 SAE GR. 5 SDS | FULL THREAD ENGAGEMENT | 1/2" | 4 | 4 | N/A | N/A | 13" O.C. MAX | 17-5/8" O.C. MAX |

PRODUCT REVISED
as complying with the Florida Building Code
Acceptance No 13-0329.13
Expiration Date 4/4/13
By
Miami Dade Product Control

FRANK L. BENNARDO, P.E. #PE0048041
LICENSED
No. 46945
STATE OF FLORIDA
PROFESSIONAL ENGINEER
10/02/2013


ENGINEERING EXPRESS
160 SW 12th AVENUE, SUITE 106
DEERFIELD BEACH, FL 33442
Ph: (954) 354-0660 Fax: (954) 354-0442
WWW.ENGEXP.COM
CERT OF AUTH #9885
A. FRANK L. BENNARDO, P.E., INC. INNOVATION


STANLEY
ACCESS TECHNOLOGIES
65 SCOTT SWAMP ROAD, FARMINGTON, CT 06032

SERIES "DURA-STORM 2000/3000" AUTO SGD
BI-PARTING/SINGLE SLIDE (LMI)
MIAMI-DADE NOTICE OF ACCEPTANCE

| REMARKS | DRWN | CHKD | DATE |
|---|---|---|---|
| INIT ISSUE | KL | FLB | 07/01/12 |
| REVIEWER COMMENT | KL | FLB | 11/26/12 |
| ADD'L COMMENTS | KL | FLB | 01/28/13 |
| ADD'L COMMENTS | KL | FLB | 03/22/13 |
| ADD'L COMMENTS | KL | FLB | 04/01/13 |
| REV. PER TESTING | KL | FLB | 05/17/13 |
| ADD'L COMMENTS | KL | FLB | 08/07/13 |
| ADD'L COMMENTS | KL | FLB | 10/03/13 |

12-SAT-13

SCALE: - 07

PAGE DESCRIPTION:

14

5

# DURA-STORM SERIES 2000 SECTIONS & ANCHORING, STANDARD 5-PT LOCKS

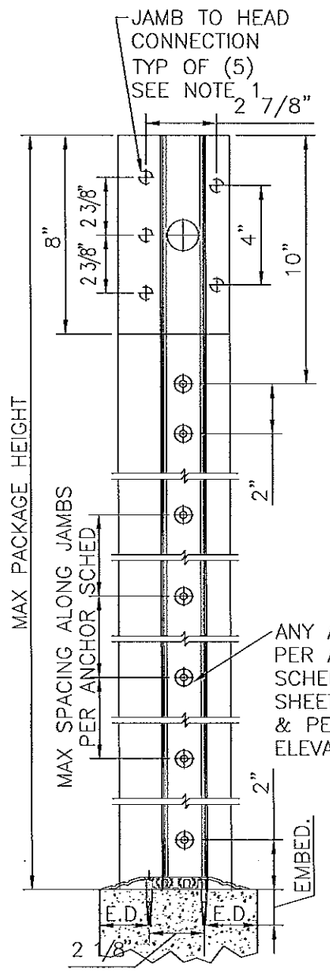


FRAME ANCHORING
N.T.S.

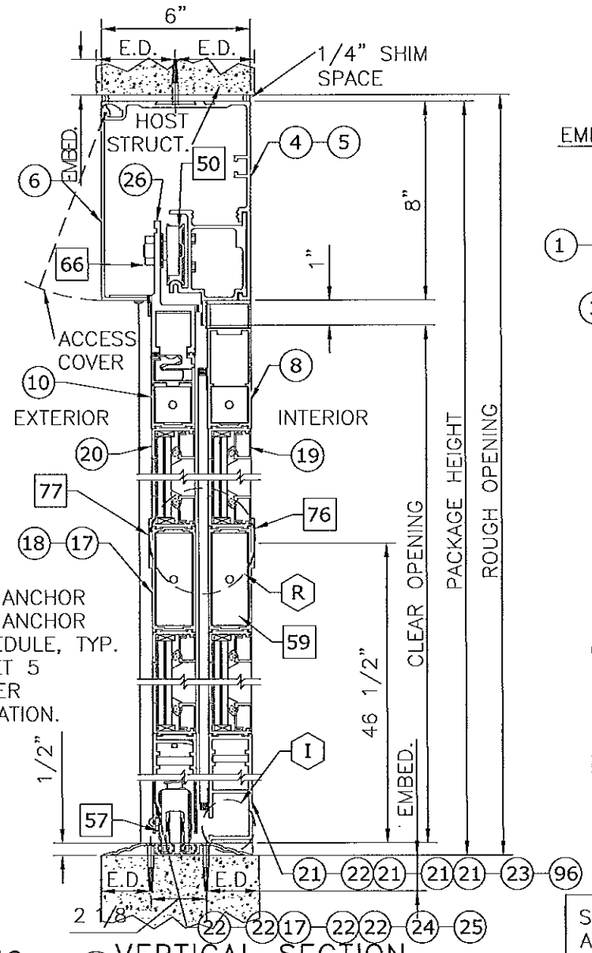


1 VERTICAL SECTION
2"=1'-0"

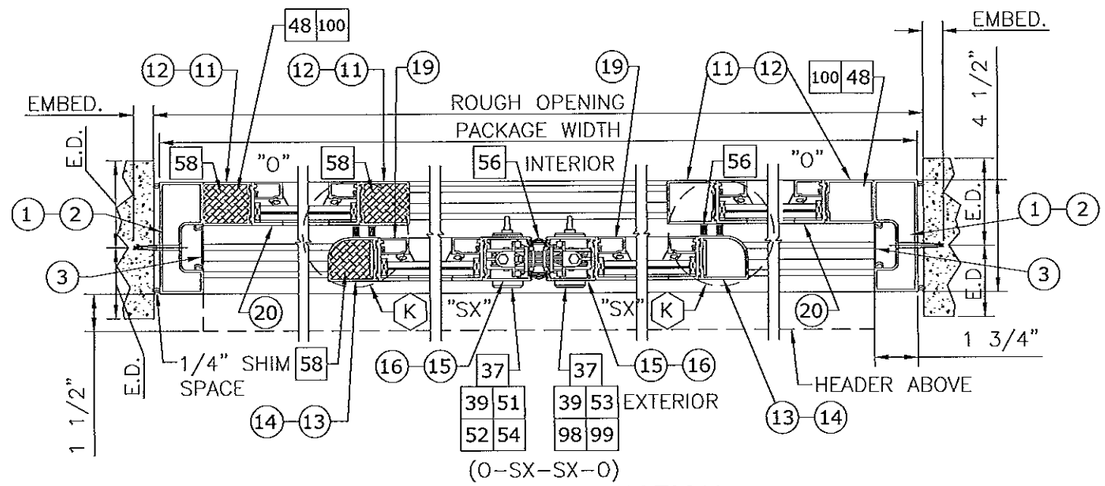


2 HORIZONTAL SECTION
2"=1'-0"
BI-PARTING

(XX) : EXTRUSION

(XX)(XX) : EXTRUSION, MULTI-PIECE

(XX)-(XX) : EXTRUSION, OPTION

[XX] : PART

[XX][XX] : PART, MULTI-PIECE

[XX]-[XX] : PART, OPTION

⟨XX⟩ : DETAIL

⟨XX⟩-⟨XX⟩ : DETAIL, OPTION

SEE HEAD ANCHORS SHEET 5, AND THRESHOLD ANCHORS SHEET 9. THRESHOLD ANCHORS APPLICABLE ONLY TO 3KSI CONCRETE.

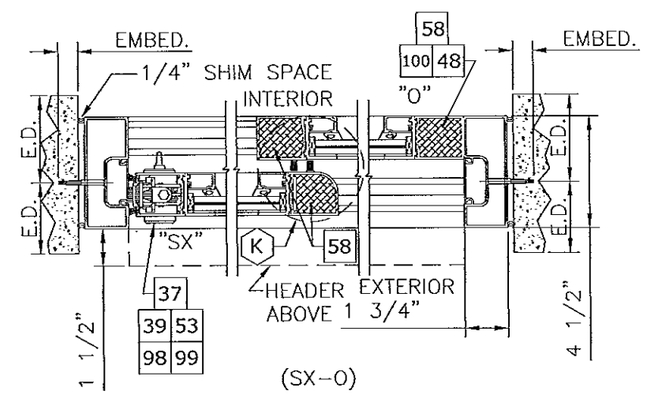


3 HORIZONTAL SECTION
2"=1'-0"
SINGLE SLIDE

NOTE: ITEM 58 "FOAM BLOCK" INSTALLED IN ALL STILES, EXCEPT LOCKING STILES. NOT SHOWN IN ALL STILES FOR CLARITY

NOTES
1. JAMB TO HEAD CONNECTION FASTENERS; 5/16-18 HHMS WITH WASHER.
2. SEE SHEET 11 FOR STACKED BOTTOM RAIL OPTIONS.

**NOTE: SEE SHEET 5 FOR ANCHOR SCHEDULE AND ALLOWABLE ANCHOR TYPES**

**PRODUCT REVISED**
in compliance with the Florida Building Code
Acceptance No. 12-0525.23
Expiration Date 4/4/18
By James L. Lemke
Miami-Dade Product Control

FRANK L. BENNARDO, P.E.
#FE6046549
FRANK L. BENNARDO LICENSE No. 46549 STATE OF FLORIDA PROFESSIONAL ENGINEER
10/22/2013


ENGINEERING EXPRESS®
160 SW 12th AVENUE, #106
DEERFIELD BEACH, FL 33442
Ph: (954) 354-0660 Fax: (954) 354-0443
WWW.ENGEXP.COM
CERT OF AUTH #9885
A. FRANK L. BENNARDO, P.E., INC. INNOVATION


STANLEY
ACCESS TECHNOLOGIES
65 SCOTT SWAMP ROAD, FARMINGTON, CT 06032

SERIES "DURA-STORM 2000/3000" AUTO SGD
BI-PARTING/SINGLE SLIDE (LMI)
MIAMI-DADE NOTICE OF ACCEPTANCE

| REMARKS | DRWN | CHKD | DATE |
|---|---|---|---|
| INIT ISSUE | KL | FLB | 07/01/12 |
| REVIEWER COMMENT | KL | FLB | 11/28/12 |
| ADD'L COMMENTS | KL | FLB | 01/28/13 |
| ADD'L COMMENTS | KL | FLB | 03/22/13 |
| ADD'L COMMENTS | KL | FLB | 04/01/13 |
| REV. PER TESTING | KL | FLB | 05/17/13 |
| ADD'L COMMENTS | KL | FLB | 08/07/13 |
| ADD'L COMMENTS | KL | FLB | 10/03/13 |

12-SAT-13

SCALE: - 07

PAGE DESCRIPTION:
-
-

14

6

# DURA-STORM SERIES 3000 SECTIONS & ANCHORING, STANDARD 5-PT LOCKS

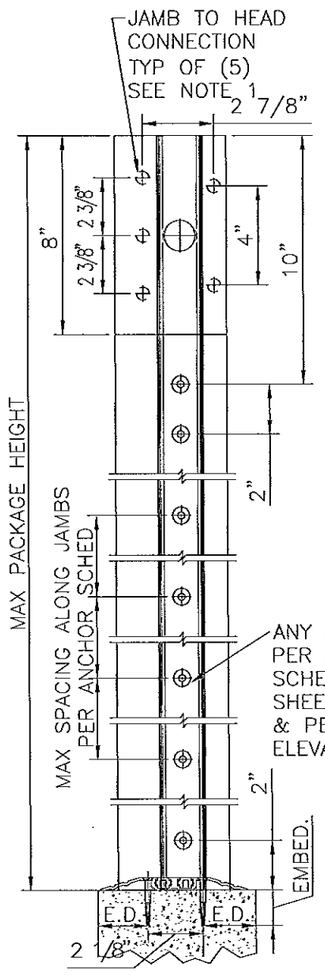


FRAME ANCHORING
N.T.S.

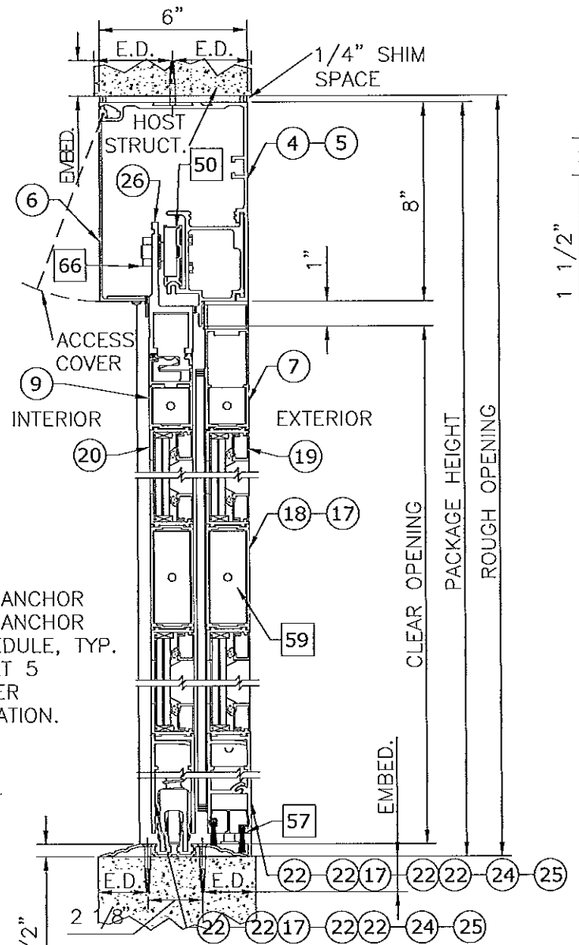


4 VERTICAL SECTION
2"=1'-0"

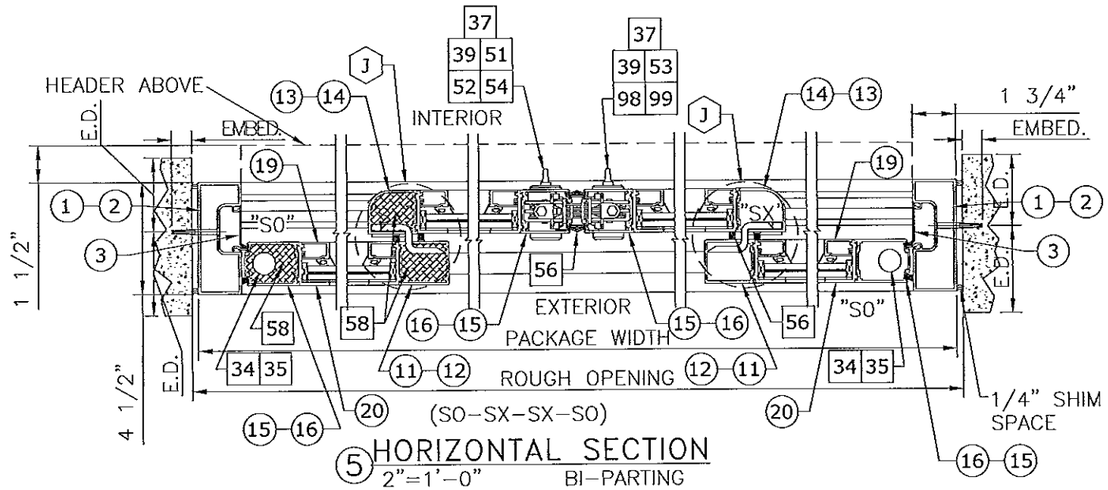


5 HORIZONTAL SECTION
2"=1'-0" BI-PARTING

XX : EXTRUSION
XX XX : EXTRUSION, MULTI-PIECE
XX - XX : EXTRUSION, OPTION
XX : PART
XX XX : PART, MULTI-PIECE
XX - XX : PART, OPTION
XX : DETAIL
XX - XX : DETAIL, OPTION

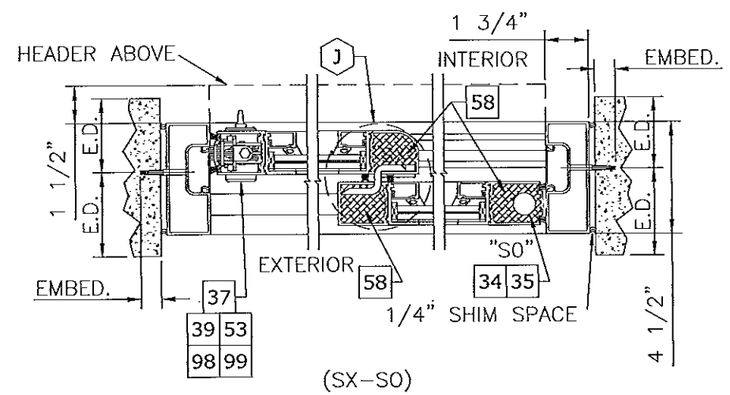


6 HORIZONTAL SECTION
2"=1'-0" SINGLE SLIDE

NOTE: ITEM 58 "FOAM BLOCK" INSTALLED IN ALL STILES, EXCEPT LOCKING STILES. NOT SHOWN IN ALL STILES FOR CLARITY

SEE HEAD ANCHORS SHEET 5, AND THRESHOLD ANCHORS SHEET 9. THRESHOLD ANCHORS APPLICABLE ONLY TO 3KSI CONCRETE.

NOTES
1. JAMB TO HEAD CONNECTION FASTENERS; 5/16-18 HHMS WITH WASHER.
2. SEE SHEET 11 FOR STACKED BOTTOM RAIL OPTIONS.

NOTE: SEE SHEET 5 FOR ANCHOR SCHEDULE AND ALLOWABLE ANCHOR TYPES

PRODUCT REVISED
in complying with the Florida Building Code
Acceptance No. 13-0529.23
Expiration Date 4/14/18
By
Miami Dade Product Control

FRANK L. BENNARDO, P.E.
LICENSE No. 46549
STATE OF FLORIDA
PROFESSIONAL ENGINEER
10/22/2013


FRANK L. BENNARDO, P.E.
# PE0046549
ENGINEERING EXPRESS
160 SW 12th AVENUE, #106
DEERFIELD BEACH, FL 33442
Ph: (954) 354-0660 Fax: (954) 354-0443
WWW.ENGEXP.COM
CERT OF AUTH #0985
A FRANK L. BENNARDO, P.E., INC. INNOVATION


STANLEY
ACCESS TECHNOLOGIES
65 SCOTT SWAMP ROAD, FARMINGTON, CT 06032

SERIES "DURA-STORM 2000/3000" AUTO SGD
BI-PARTING/SINGLE SLIDE (LMI)
MIAMI-DADE NOTICE OF ACCEPTANCE

| REMARKS | DRWN | CHKD | DATE |
|---|---|---|---|
| INIT ISSUE | KL | FLB | 07/01/12 |
| REVIEWER COMMENT | KL | FLB | 11/26/12 |
| ADD'L COMMENTS | KL | FLB | 01/28/13 |
| ADD'L COMMENTS | KL | FLB | 03/22/13 |
| ADD'L COMMENTS | KL | FLB | 04/01/13 |
| REV. PER TESTING | KL | FLB | 05/17/13 |
| ADD'L COMMENTS | KL | FLB | 08/07/13 |
| ADD'L COMMENTS | KL | FLB | 10/03/13 |

12-SAT-13
SCALE: - 07
PAGE DESCRIPTION:
-
-

# DURA-STORM SERIES 3000 SECTIONS & ANCHORING, PANIC RELEASE 4-PT LOCKS

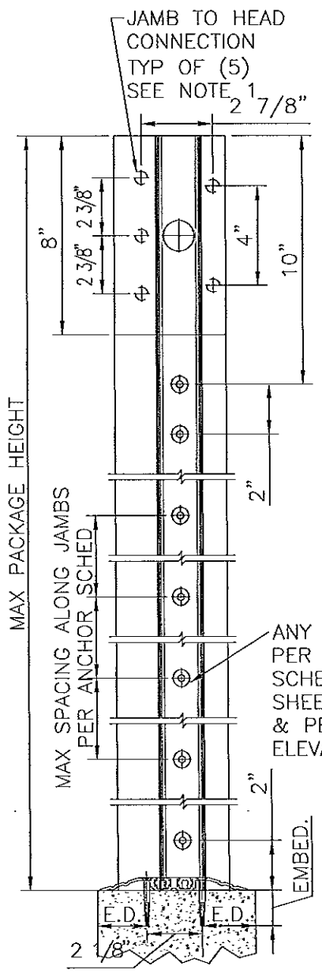


FRAME ANCHORING
2"=1'-0"

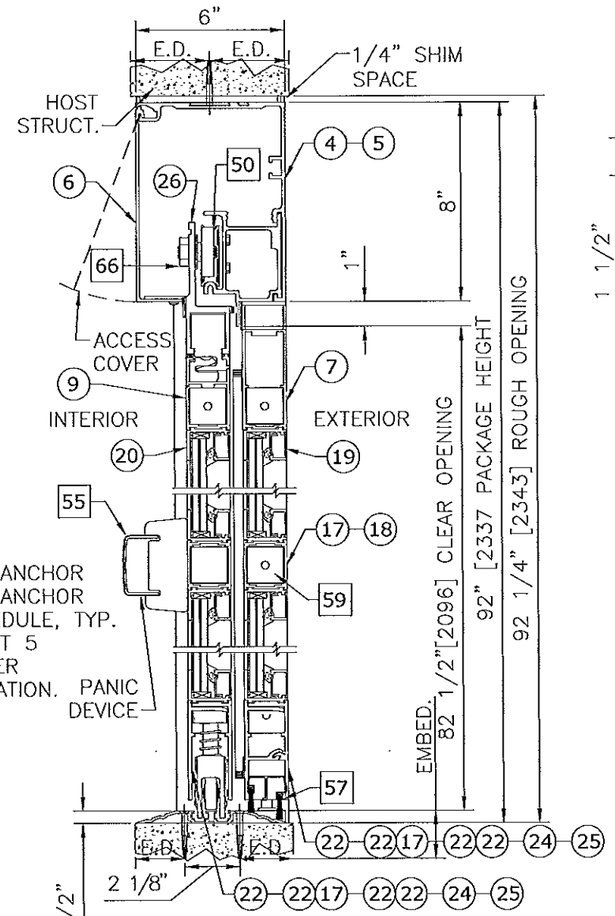


4 VERTICAL SECTION
2"=1'-0"

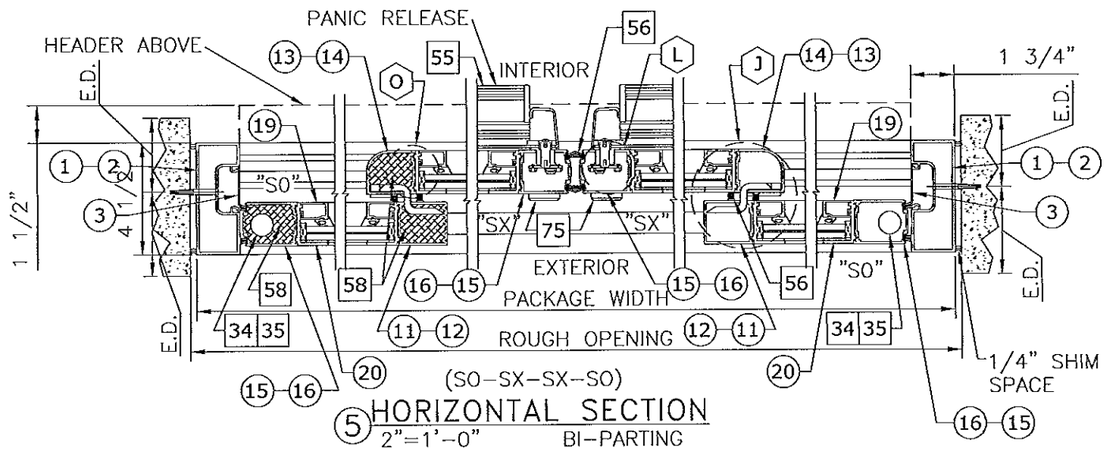


5 HORIZONTAL SECTION
2"=1'-0" BI-PARTING

(XX) : EXTRUSION
(XX)(XX) : EXTRUSION, MULTI-PIECE
(XX)-(XX) : EXTRUSION, OPTION
[XX] : PART
[XX][XX] : PART, MULTI-PIECE
[XX]-[XX] : PART, OPTION
⟨XX⟩ : DETAIL
⟨XX⟩-⟨XX⟩ : DETAIL, OPTION

SEE HEAD ANCHORS SHEET 5, AND THRESHOLD ANCHORS SHEET 9. THRESHOLD ANCHORS APPLICABLE ONLY TO 3KSI CONCRETE.

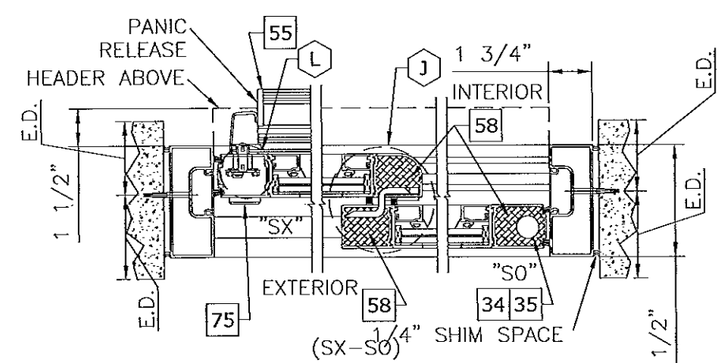


6 HORIZONTAL SECTION
2"=1'-0" SINGLE SLIDE

NOTE: ITEM 58 "FOAM BLOCK" INSTALLED IN ALL STILES, EXCEPT LOCKING STILES. NOT SHOWN IN ALL STILES FOR CLARITY

NOTES
1. JAMB TO HEAD CONNECTION FASTENERS; 5/16-18 HHMS WITH WASHER.
2. SEE SHEET 11 FOR STACKED BOTTOM RAIL OPTIONS.

NOTE: SEE SHEET 5 FOR ANCHOR SCHEDULE AND ALLOWABLE ANCHOR TYPES

PRODUCT REVISED
as complying with the Florida Building Code
Acceptance No. 13-0529.23
Expiration Date 07/01/18
By
Miami Dade Product Control

FRANK L. BENNARDO
LICENSE No. 46549
STATE OF FLORIDA
PROFESSIONAL ENGINEER
10/22/2013


FRANK L. BENNARDO, P.E.
FL#46549
ENGINEERING EXPRESS®
160 SW 12th AVENUE, #106
DEERFIELD BEACH, FL 33442
Ph: (954) 354-0660 Fax: (954) 354-0443
WWW.ENGEXP.COM
CERT OF AUTH #0885
A. FRANK L. BENNARDO, P.E., INC. INNOVATION


STANLEY
ACCESS TECHNOLOGIES
65 SCOTT SWAMP ROAD, FARMINGTON, CT 06032

SERIES "DURA-STORM 2000/3000" AUTO SGD
BI-PARTING/SINGLE SLIDE (LMI)
MIAMI-DADE NOTICE OF ACCEPTANCE

| REMARKS | DRWN | CHKD | DATE |
|---|---|---|---|
| INIT ISSUE | KL | FLB | 07/01/12 |
| REVIEWER COMMENT | KL | FLB | 11/28/12 |
| ADD'L COMMENTS | KL | FLB | 01/28/13 |
| ADD'L COMMENTS | KL | FLB | 03/22/13 |
| ADD'L COMMENTS | KL | FLB | 04/01/13 |
| REV. PER TESTING | KL | FLB | 05/17/13 |
| ADD'L COMMENTS | KL | FLB | 08/07/13 |
| ADD'L COMMENTS | KL | FLB | 10/03/13 |

12-SAT-13
SCALE: -
07
PAGE DESCRIPTION:
-
-

# DURA-STORM SERIES 2000/3000 THRESHOLDS & ANCHORING

**NOTE: USE CONCRETE ANCHOR PER ANCHOR SCHEDULE FOR ALL THRESHOLD ANCHORAGE DETAILS SHOWN HEREIN. SEE SHEET 5 FOR ANCHOR SCHEDULE AND ALLOWABLE CONCRETE ANCHOR TYPES**

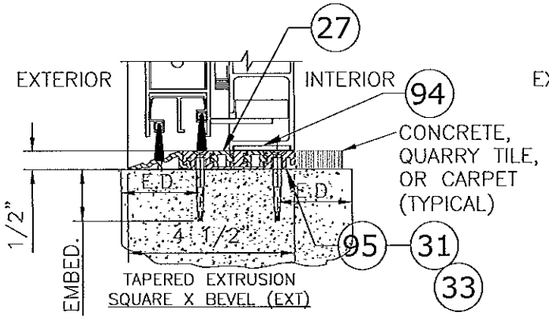


THRESHOLD–TAPERED EXT
3"=1'–0" 2000

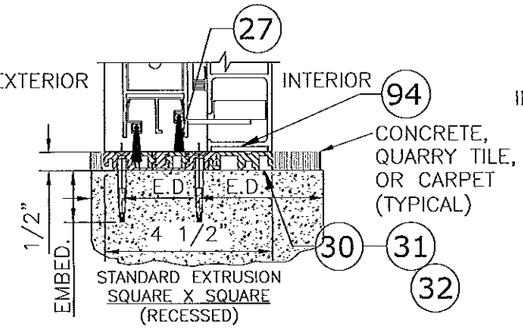


THRESHOLD–SQUARE
3"=1'–0" 2000

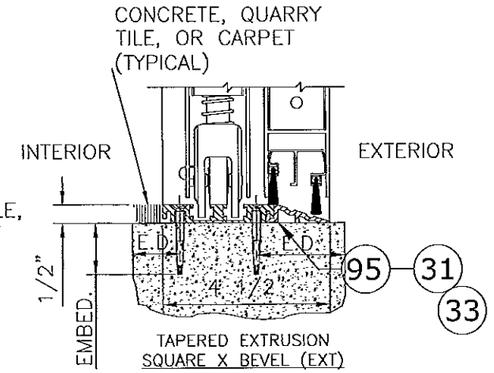


THRESHOLD–TAPERED EXT
3"=1'–0" 3000

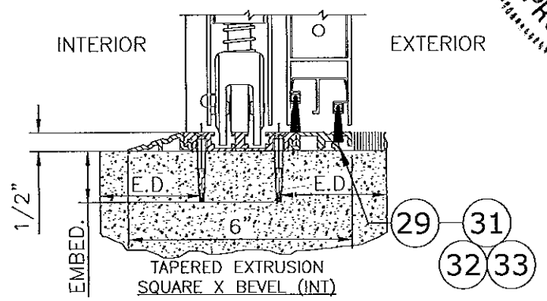


THRESHOLD–TAPERED INT
3"=1'–0" 3000

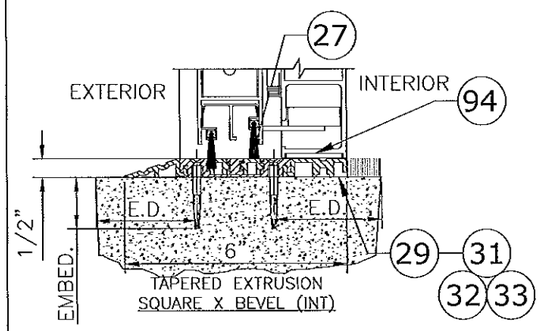


THRESHOLD–TAPERED INT
3"=1'–0" 2000

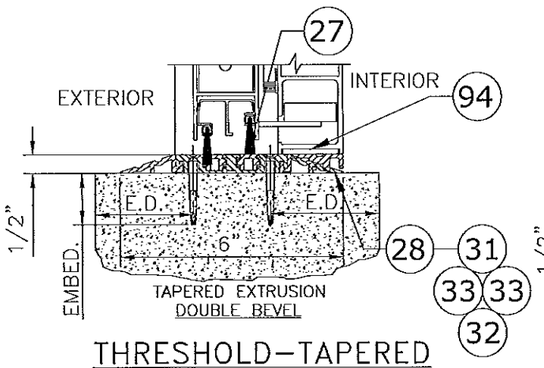


THRESHOLD–TAPERED
3"=1'–0" 2000

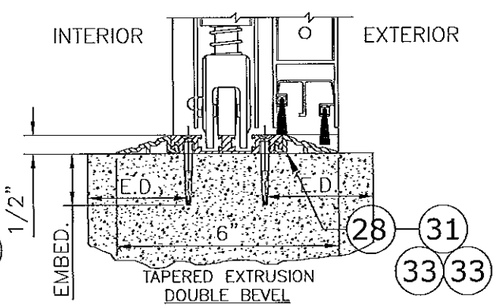


THRESHOLD–TAPERED
3"=1'–0" 3000

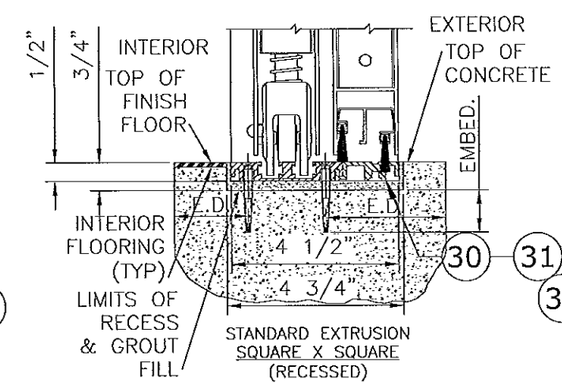


THRESHOLD–SQUARE
3"=1'–0" 3000

CLUSTER OF ANCHORS IN (2) ROWS CENTERED AT PANEL OVERLAP. QUANTITY PER CLUSTER PER ANCHOR SCHEDULE, ANCHORS IN CLUSTER SPACED 3" O.C. ALONG ROW, TYP.

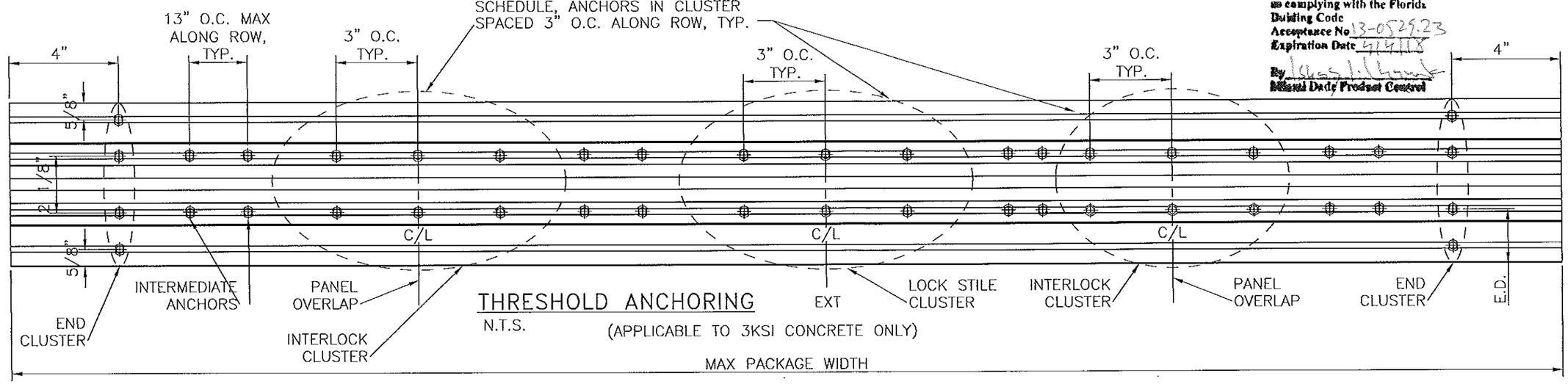


THRESHOLD ANCHORING
N.T.S.
(APPLICABLE TO 3KSI CONCRETE ONLY)

PRODUCT REVISED
in complying with the Florida Building Code
Acceptance No 13-0529.23
Expiration Date 5/14/18
By
Miami Dade Product Control

FRANK L. BENNARDO, P.E.
LICENSE No. 46510
STATE OF FLORIDA
PROFESSIONAL ENGINEER
10/22/2013


ENGINEERING EXPRESS
160 SW 12th AVENUE, #106
DEERFIELD BEACH, FL 33442
Ph: (954) 354-0660 Fax: (954) 354-0443
WWW.ENGEXP.COM
CERT OF AUTH #8885
A. FRANK L. BENNARDO, P.E., INC. INNOVATION


STANLEY
ACCESS TECHNOLOGIES
65 SCOTT SWAMP ROAD, FARMINGTON, CT 06032

SERIES "DURA-STORM 2000/3000" AUTO SGD
BI-PARTING/SINGLE SLIDE (LMI)
MIAMI-DADE NOTICE OF ACCEPTANCE

| REMARKS | DRWN | CHKD | DATE |
|---|---|---|---|
| INIT ISSUE | KL | FLB | 07/01/12 |
| REVIEWER COMMENT | KL | FLB | 11/28/12 |
| ADD'L COMMENTS | KL | FLB | 01/28/13 |
| ADD'L COMMENTS | KL | FLB | 03/22/13 |
| ADD'L COMMENTS | KL | FLB | 04/01/13 |
| REV. PER TESTING | KL | FLB | 05/17/13 |
| ADD'L COMMENTS | KL | FLB | 08/07/13 |
| ADD'L COMMENTS | KL | FLB | 10/03/13 |

12-SAT-13
SCALE: - 07
PAGE DESCRIPTION:
-
-

# DURA-STORM SERIES 2000/3000 EXTRUSIONS

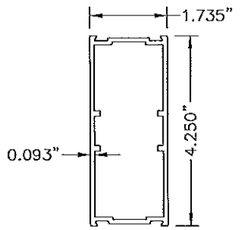


18 MUNTIN BAR
N.T.S. 6063-T6

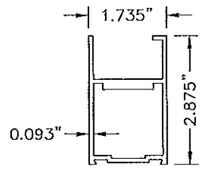


9 TOP RAIL, SX (3000)
N.T.S. 6063-T6

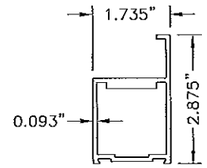


10 TOP RAIL, SX (2000)
N.T.S. 6063-T6

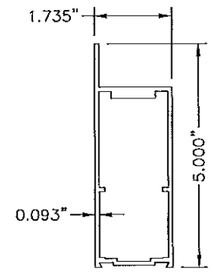


7 TOP RAIL, SO (3000)
N.T.S. 6063-T6

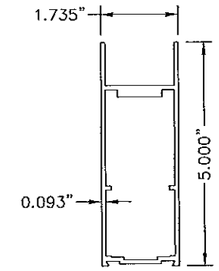


8 TOP RAIL, O (2000)
N.T.S. 6063-T6

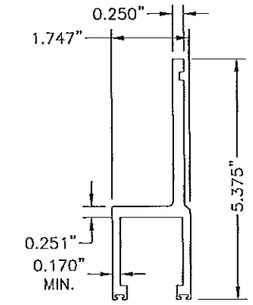


26 HANGER
N.T.S. 6063-T6

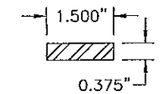


74 STEEL PANIC REINFORCING
N.T.S. ASTM A-36

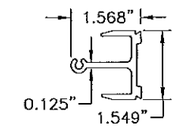


79 PANIC MUNTIN CLIP
N.T.S. 6063-T6

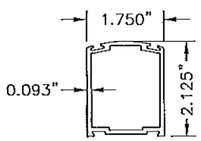


15 STILE LEAD (NARROW)
N.T.S. 6063-T6

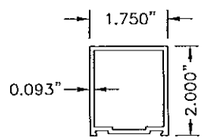


11 STILE FIXED (NARROW)
N.T.S. 6063-T6

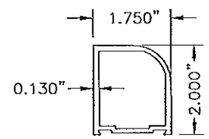


13 STILE PIVOT (NARROW)
N.T.S. 6063-T6

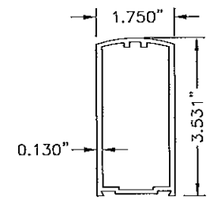


12 STILE LEAD (MEDIUM)
N.T.S. 6063-T6

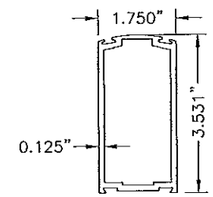


16 STILE LOCK (MEDIUM)
N.T.S. 6063-T6

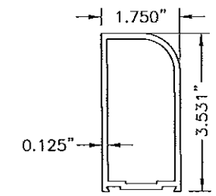


14 STILE PIVOT (MEDIUM)
N.T.S. 6063-T6

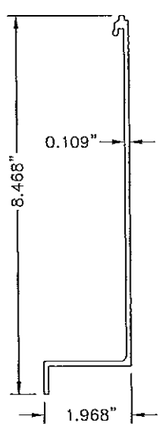


6 HEADER COVER
N.T.S. 6063-T6

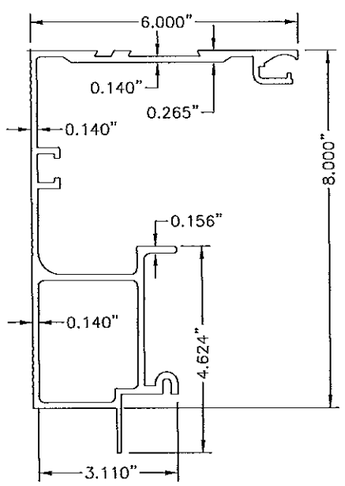


4 HEADER
N.T.S. 6063-T6

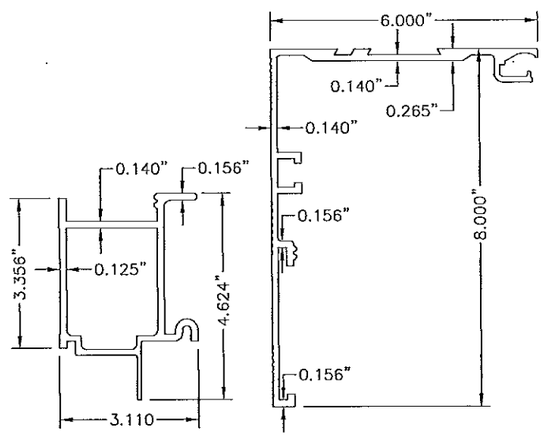


5 HEADER (2 PC.)
N.T.S. 6063-T6

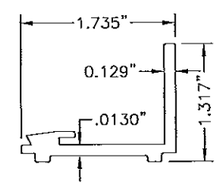


20 GUTTER
N.T.S. 6063-T6

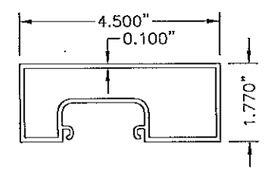


1 JAMB 4 1/2
N.T.S. 6063-T6

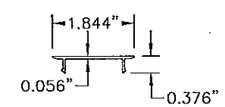


3 JAMB INSERT
N.T.S. 6063-T6

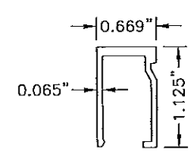


19 GLASS STOP
N.T.S. 6063-T6

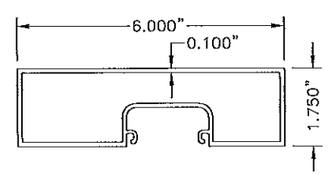


2 JAMB 6
N.T.S. 6063-T6

PRODUCT REVISED
as complying with the Florida
Building Code
Acceptance No 13-0329.23
Expiration Date 4/6/13
By
Miami Dade Product Control

FRANK L. BENNARDO, P.E.
LICENSE No. 46549
STATE OF FLORIDA
PROFESSIONAL ENGINEER
10/22/2013


FRANK L. BENNARDO, P.E.
FL LICENSE No. 46549
ENGINEERING EXPRESS®
160 SW 12th AVENUE, #306
DEERFIELD BEACH, FL 33442
Ph: (954) 354-0660 Fax: (954) 354-0443
WWW.ENGEXP.COM
CERT OF AUTH #0885
A. FRANK L. BENNARDO, P.E., INC. INNOVATION


STANLEY
ACCESS TECHNOLOGIES
65 SCOTT SWAMP ROAD, FARMINGTON, CT 06032

SERIES "DURA-STORM 2000/3000" AUTO SGD
BI-PARTING/SINGLE SLIDE (LMI)
MIAMI-DADE NOTICE OF ACCEPTANCE

| REMARKS | DRWN | CHKD | DATE |
|---|---|---|---|
| INIT ISSUE | KL | FLB | 07/01/12 |
| REVIEWER COMMENT | KL | FLB | 11/28/12 |
| ADD'L COMMENTS | KL | FLB | 01/28/13 |
| ADD'L COMMENTS | KL | FLB | 03/22/13 |
| ADD'L COMMENTS | KL | FLB | 04/01/13 |
| REV. PER TESTING | KL | FLB | 05/17/13 |
| ADD'L COMMENTS | KL | FLB | 08/07/13 |
| ADD'L COMMENTS | KL | FLB | 10/03/13 |

12-SAT-13

SCALE: - 07

PAGE DESCRIPTION:
-
-

14

10

# DURA-STORM SERIES 2000/3000 EXTRUSIONS

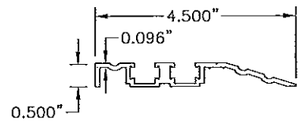


95 COMPONENT THRESHOLD
N.T.S. 6063-T6

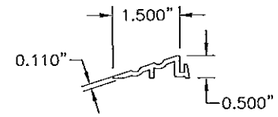


33 COMPONENT THRESHOLD
N.T.S. 6063-T6

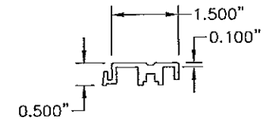


32 COMPONENT THRESHOLD
N.T.S. 6063-T6

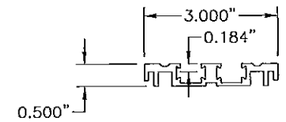


31 COMPONENT THRESHOLD
N.T.S. 6063-T6

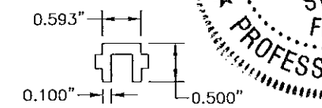


27 THRESHOLD FILLER
N.T.S. 6063-T6

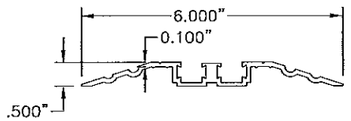


28 ALT THRESHOLD
N.T.S. 6063-T6

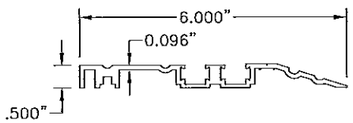


29 ALT THRESHOLD
N.T.S. 6063-T6

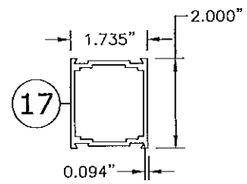


MUNTIN BAR
N.T.S. 6063-T6

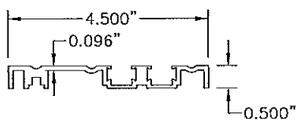


30 THRESHOLD
N.T.S. 6063-T6

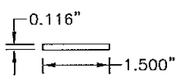


94 KEY STRIP
N.T.S. 6063-T6

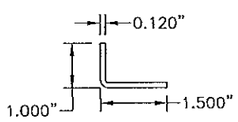


48 BRACKET
N.T.S. 6063-T6

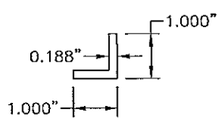


100 ANGLE
N.T.S. 6063-T6

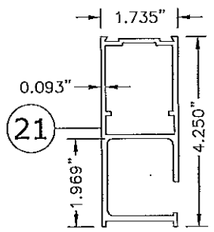


BOTTOM RAIL, O
N.T.S. 6063-T6

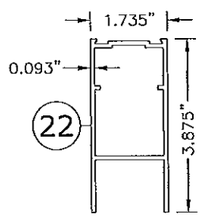


BOTTOM RAIL, SX/SO
N.T.S. 6063-T6

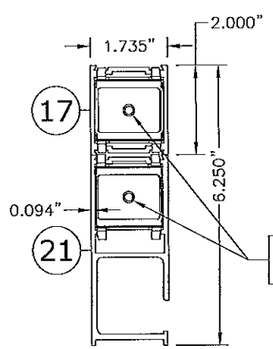


STACKED BOTTOM RAIL, O
N.T.S. 6063-T6

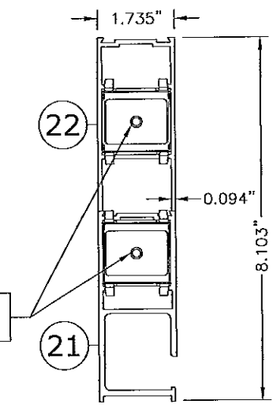


STACKED BOTTOM RAIL, O
N.T.S. 6063-T6

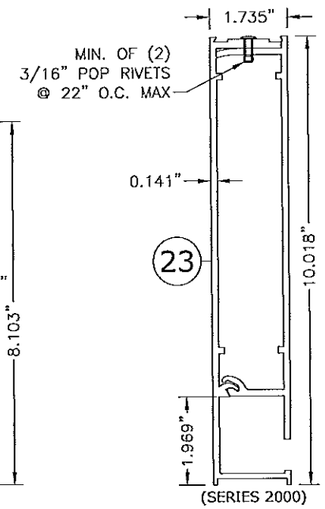


BOTTOM RAIL, O
N.T.S. 2-PIECE 6063-T6

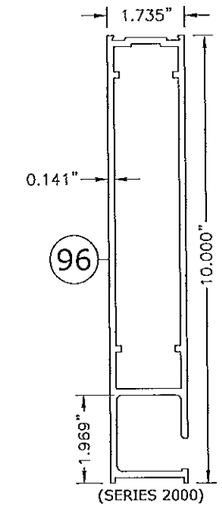


BOTTOM RAIL, O
N.T.S. 1-PIECE 6063-T6

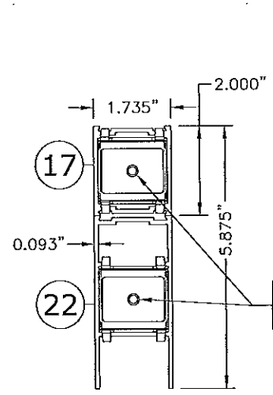


STACKED BOTTOM RAIL, SX/SO
N.T.S. 6063-T6

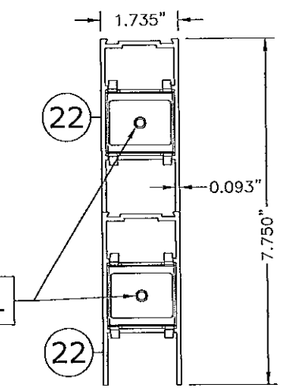


STACKED BOTTOM RAIL, SX/SO
N.T.S. 6063-T6

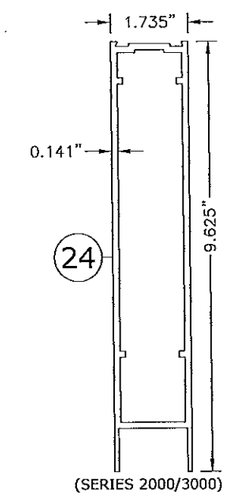


BOTTOM RAIL, SX/SO
N.T.S. 1-PIECE 6063-T6

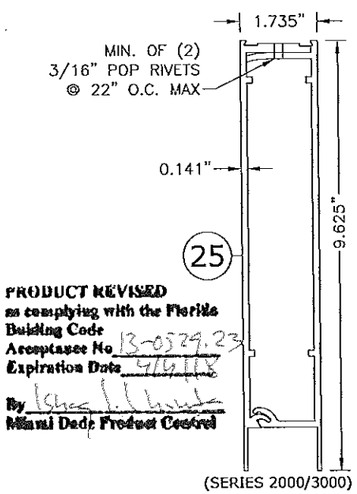


BOTTOM RAIL, SX/SO
N.T.S. 2-PIECE 6063-T6

PRODUCT REVISED
as complying with the Florida Building Code
Acceptance No. 13-0529.23
Expiration Date 9/6/18
By
Miami Dade Product Control

FRANK L. BENNARDO
LICENSE No. 46549
STATE OF FLORIDA
PROFESSIONAL ENGINEER
10/22/2013


FRANK L. BENNARDO, P.E.
LIC # PE0046549
ENGINEERING EXPRESS®
160 SW 12th AVENUE, #106
DEERFIELD BEACH, FL 33442
Ph: (954) 354-0660 Fax: (954) 354-0443
WWW.ENGEXP.COM
CERT OF AUTH #9985
A. FRANK L. BENNARDO, P.E., INC. INNOVATION


STANLEY
ACCESS TECHNOLOGIES
65 SCOTT SWAMP ROAD, FARMINGTON, CT 06032

SERIES "DURA-STORM 2000/3000" AUTO SGD
BI-PARTING/SINGLE SLIDE (LMI)
MIAMI-DADE NOTICE OF ACCEPTANCE

| REMARKS | DRWN | CHKD | DATE |
|---|---|---|---|
| INIT ISSUE | KL | FLB | 07/01/12 |
| REVIEWER COMMENT | KL | FLB | 11/26/12 |
| ADDL COMMENTS | KL | FLB | 01/28/13 |
| ADDL COMMENTS | KL | FLB | 03/22/13 |
| ADDL COMMENTS | KL | FLB | 04/01/13 |
| REV. PER TESTING | KL | FLB | 05/17/13 |
| ADDL COMMENTS | KL | FLB | 08/07/13 |
| ADDL COMMENTS | KL | FLB | 10/03/13 |

12-SAT-13
SCALE: - 07
PAGE DESCRIPTION:
-
-

14

11

# DURA-STORM SERIES 2000/3000 DETAILS

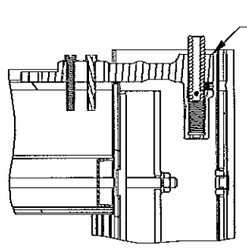


A SO PIVOT TOP
NTS SERIES 3000

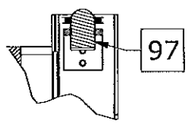


P SO PANEL BALL DETENT TOP
NTS SERIES 3000

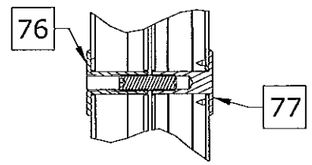


R SX/O WIND CLIP
NTS SERIES 2000

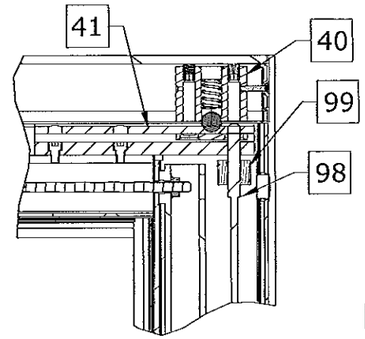


F STD BOLT TOP
NTS SERIES 2000/3000

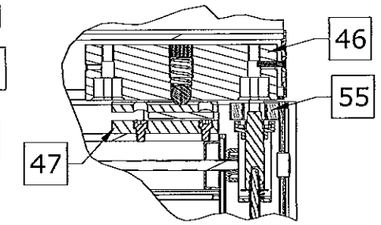


G PANIC BOLT TOP
NTS 3000

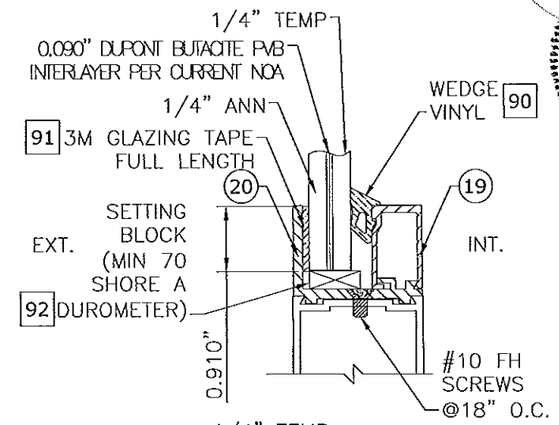


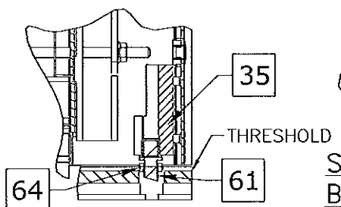


B SO PIVOT BOTTOM
NTS SERIES 3000

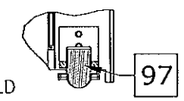


Q SO PANEL BALL DETENT BOTTOM
NTS SERIES 3000

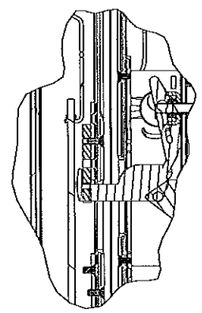

N 3-POINT LATCH DETAIL
NTS SERIES 2000/3000

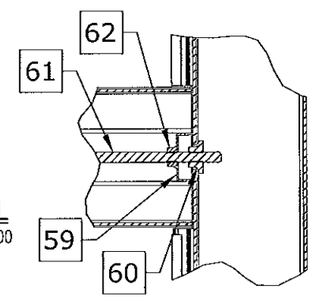


M MUNTIN DETAIL
NTS SERIES 2000/3000

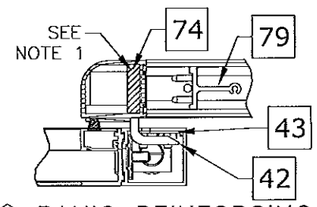


O PANIC REINFORCING
NTS 3000

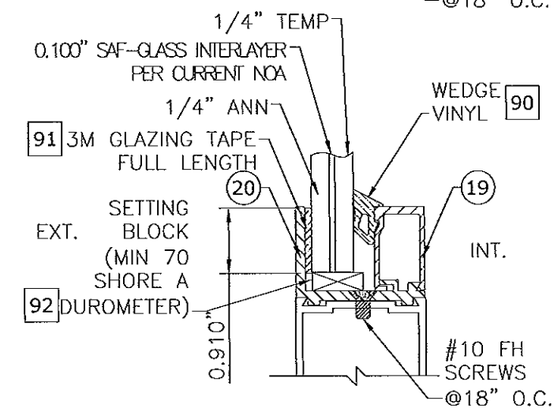


9/16" LAMINATED GLAZING DETAILS
NTS

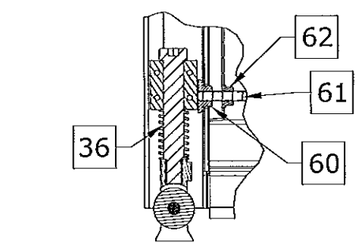


C SX GUIDE/PIVOT BOTTOM
NTS SERIES 3000

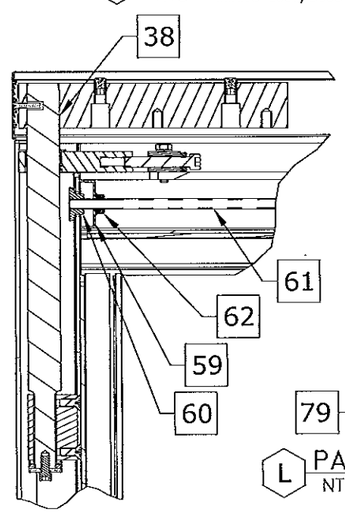


D SX PIVOT TOP
NTS SERIES 2000/3000

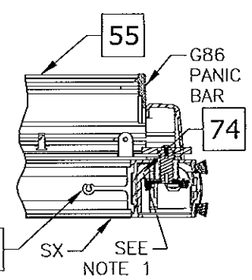


L PANIC REINFORCING
NTS 3000

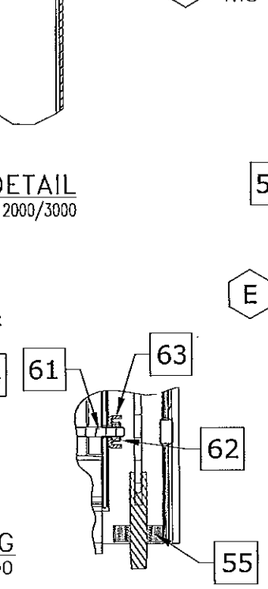


E STD BOLT BOTTOM
NTS SERIES 2000/3000




H PANIC BOLT BOTTOM
NTS 3000

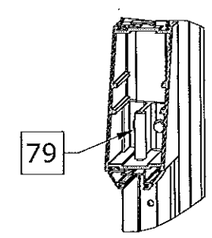


V PANIC MUNTIN DETAIL
NTS 3000

PRODUCT REVISED
as complying with the Florida Building Code
Acceptance No. 13-0529.23
Expiration Date 5/14/18
By
Miami Dade Product Control

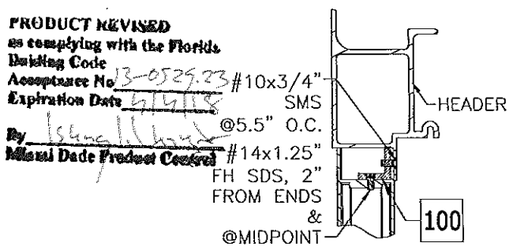


O O PANEL ANGLE
NTS SERIES 2000

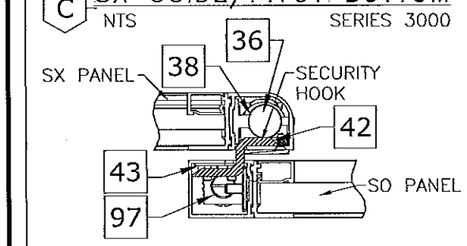


J SECURITY HOOK
NTS SERIES 3000
(SX-SO INTERLOCK)

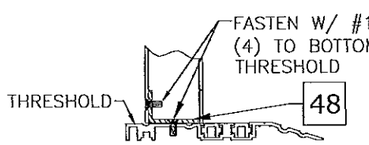


I O-PANEL BRACKET
NTS SERIES 2000

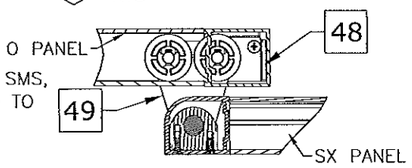


K SX GUIDE/PIVOT BOTTOM
NTS SERIES 2000
(O-SX INTERLOCK)

NOTES
1. ITEM 74, "STEEL PLATE-PANIC REINFORCING", IS CONTAINED WITHIN VERTICAL STILE, HAS A MINIMUM LENGTH OF 48", AND IS CENTERED VERTICALLY ABOUT CENTERLINE OF HORIZONTAL MUNTIN. ITEM 74 IS FASTENED AS FOLLOWS: SINGLE ROW #10 X 32 X 1/2" FHTCMS @ 6" OC.


FRANK L. BENNARDO, P.E.
LICENSE NO. PE0096549
STATE OF FLORIDA
10/22/2013
ENGINEERING EXPRESS, INC.
160 SW 12th AVENUE, STE 106
DEERFIELD BEACH, FL 33442
Ph: (954) 354-0660 Fax: (954) 354-0443
WWW.ENGEXP.COM
CERT OF AUTH #9885
A. FRANK L. BENNARDO, P.E., INC. INNOVATION ENGINEER


STANLEY
ACCESS TECHNOLOGIES
65 SCOTT SWAMP ROAD, FARMINGTON, CT 06032

SERIES "DURA-STORM 2000/3000" AUTO SGD
BI-PARTING/SINGLE SLIDE (LMI)
MIAMI-DADE NOTICE OF ACCEPTANCE

| REMARKS | DRWN | CHKD | DATE |
|---|---|---|---|
| INIT ISSUE | KL | FLB | 07/01/12 |
| REVIEWER COMMENT | KL | FLB | 11/26/12 |
| ADD'L COMMENTS | KL | FLB | 01/28/13 |
| ADD'L COMMENTS | KL | FLB | 03/22/13 |
| ADD'L COMMENTS | KL | FLB | 04/01/13 |
| REV. PER TESTING | KL | FLB | 05/17/13 |
| ADD'L COMMENTS | KL | FLB | 08/07/13 |
| ADD'L COMMENTS | KL | FLB | 10/03/13 |

12-SAT-13

SCALE: - 07

PAGE DESCRIPTION:
-
-

14

12

# DURA-STORM SERIES 2000/3000 LOCKING ARRANGEMENTS

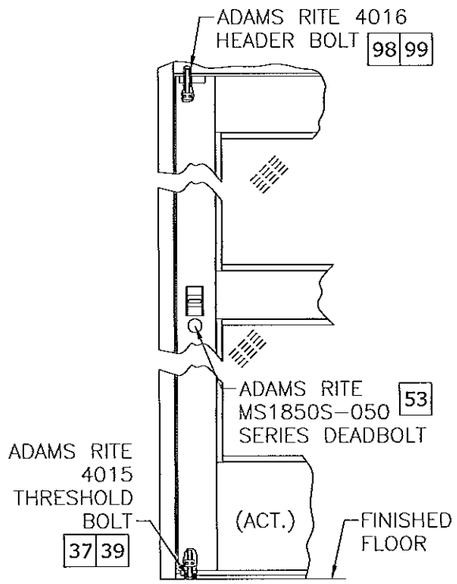


3-PT CONCEALED
LOCKING SYSTEM
SERIES 2000/3000
SINGLE SLIDE

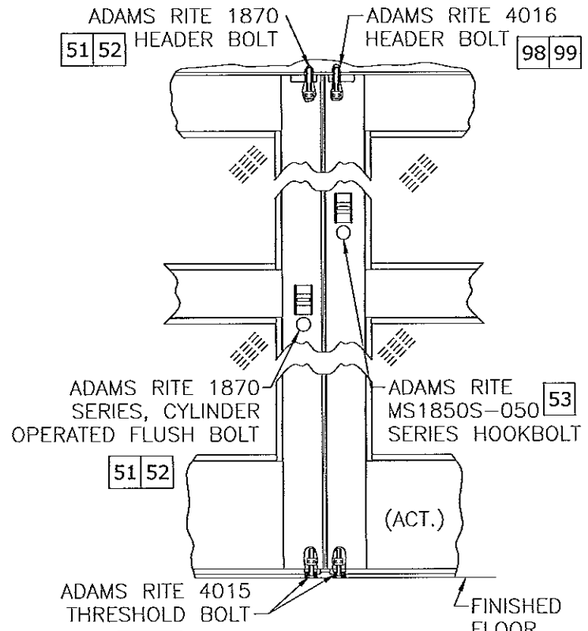


5-PT CONCEALED
LOCKING SYSTEM
SERIES 2000/3000
BI-PARTING

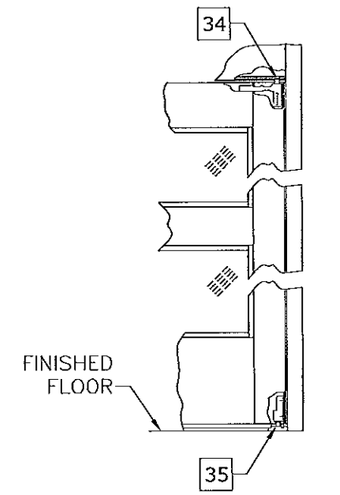


SERIES 3000
SO-PANEL

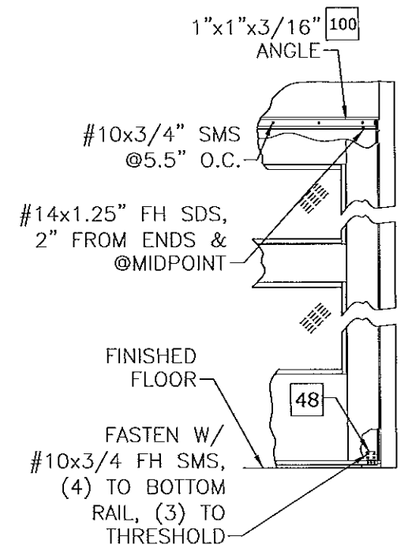


SERIES 2000
O-PANEL

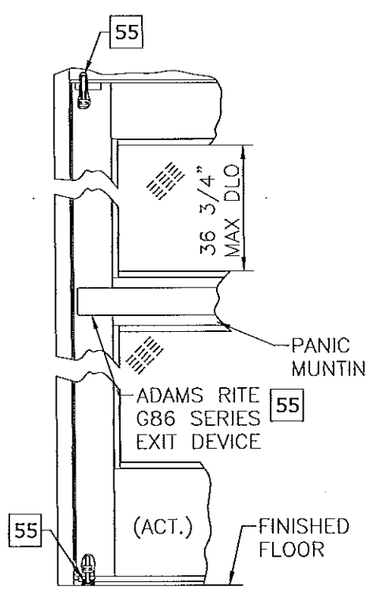


2-PT CONCEALED
VERTICAL ROD WITH
PANIC RELEASE
LOCKING SYSTEM
SERIES 3000
SINGLE SLIDE

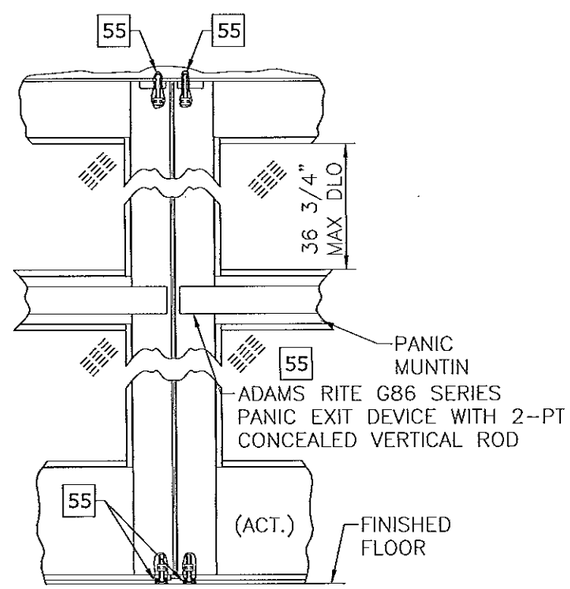


4-PT CONCEALED
VERTICAL ROD WITH
PANIC RELEASE
LOCKING SYSTEM
SERIES 3000
BI-PARTING

PRODUCT REVISED
as complying with the Florida
Building Code
Acceptance No 12-0529.23
Expiration Date 5/4/18
By
Miami Dade Product Control

FRANK L. BENNARDO, P.E.
# PE0046549

FRANK L. BENNARDO
LICENSE
No. 46549
STATE OF
FLORIDA
PROFESSIONAL ENGINEER

10/22/2013


ENGINEERING EXPRESS
160 SW 12th AVENUE, #106
DEERFIELD BEACH, FL 33442
Ph: (954) 354-0660 Fax: (954) 354-0443
WWW.ENGEXP.COM
CERT OF AUTH #9885
A FRANK L. BENNARDO, P.E., INC. INNOVATION


STANLEY
ACCESS TECHNOLOGIES
65 SCOTT SWAMP ROAD, FARMINGTON, CT 06032

SERIES "DURA-STORM 2000/3000" AUTO SGD
BI-PARTING/SINGLE SLIDE (LMI)
MIAMI-DADE NOTICE OF ACCEPTANCE

| REMARKS | DRWN | CHKD | DATE |
|---|---|---|---|
| INIT ISSUE | KL | FLB | 07/01/12 |
| REVIEWER COMMENT | KL | FLB | 11/28/12 |
| ADDL COMMENTS | KL | FLB | 01/28/13 |
| ADDL COMMENTS | KL | FLB | 03/22/13 |
| ADDL COMMENTS | KL | FLB | 04/01/13 |
| REV. PER TESTING | KL | FLB | 05/17/13 |
| ADDL COMMENTS | KL | FLB | 08/07/13 |
| ADDL COMMENTS | KL | FLB | 10/03/13 |

12-SAT-13

SCALE: - 07

PAGE DESCRIPTION:
-
-

14

13

# DURA-STORM SERIES 2000/3000 BILL OF MATERIALS

| BILL OF MATERIALS | |
|---|---|
| REFERENCE | DESCRIPTION |
| 1 | Extrusion - Jamb - 4 1/2" |
| 2 | Extrusion - Jamb - 6" |
| 3 | Extrusion - Jamb - Insert |
| 4 | Extrusion - Header - 1 PC |
| 5 | Extrusion - Header - 2 PC |
| 6 | Extrusion - Header Cover - |
| 7 | Extrusion - Top Rail - SO |
| 8 | Extrusion - Top Rail - O |
| 9 | Extrusion - Top Rail - SX |
| 10 | Extrusion - Top Rail - SX |
| 11 | Extrusion - Stile, Narrow - Fixed |
| 12 | Extrusion - Stile, Medium - Lead |
| 13 | Extrusion - Stile, Narrow - Pivot |
| 14 | Extrusion - Stile, Medium - Pivot |
| 15 | Extrusion - Stile, Narrow - Lead |
| 16 | Extrusion - Stile, Medium - Lock |
| 17 | Extrusion - Muntin Bar/Stacked Bottom Rail Part - 2" |
| 18 | Extrusion - Muntin Bar - 4.25" |
| 19 | Extrusion - Glass Stop |
| 20 | Extrusion - Glass Gutter |
| 21 | Extrusion - Bottom Rail O - 4" |
| 22 | Extrusion - Bottom Rail SO/SX - 4" |
| 23 | Extrusion - Bottom Rail O - 10" - 2 PC |
| 24 | Extrusion - Bottom Rail SX/SO - 1 PC - 10" |
| 25 | Extrusion - Bottom Rail SX/SO - 2 PC - 10" |
| 26 | Extrusion - Hanger - |
| 27 | Extrusion - Threshold - Filler |
| 28 | Extrusion - Threshold - Dbl bevel - 6" |
| 29 | Extrusion - Threshold - Sq/Bvl - 6" |
| 30 | Extrusion - Threshold - Recessed - 4.5" |
| 31 | Extrusion - Threshold - Core |
| 32 | Extrusion - Threshold - Square |
| 33 | Extrusion - Threshold - Bevel |
| 34 | Component - Top Pivot - SO - 3000 |
| 35 | Component - Bottom Pivot - SO - 3000 |
| 36 | Component - Bottom Guide - SX- 3000 |
| 37 | Component - Throw Bolt - Std - Adams Rite 4015 |
| 38 | Component - Top pivot - SX |
| 39 | Component - Guide - Throw Bolt - Adams Rite 4015 |
| 40 | Component - Ball Detent - Std |
| 41 | Component - Detent Block - Std |
| 42 | Component - Security Hook - Std |
| 43 | Component - Backing Plate - Security Hook |

| BILL OF MATERIALS | |
|---|---|
| REFERENCE | DESCRIPTION |
| 46 | Component - Ball Detent |
| 47 | Component - Detent Block |
| 48 | Component - Bracket - O Panel |
| 49 | Component - Bottom Guide - SX - 2000 |
| 50 | Component - Load Wheel - Steel/Aluminum/Plastic |
| 51 | Component - 2-PT Lock - Cylinder - Adams Rite 1870 Flushbolt, to be used with A.R. 4015 bottom bolt. |
| 52 | Component - 2-PT Lock - Thumb Turn - Adams Rite 1870 Flushbolt, to be used with A.R. 4015 bottom bolt. |
| 53 | Component - 8 Ply Hookbolt Lock - Single Action - Adams Rite MS1850S-050 (Deadbolt), Used w/ Adams Rite 4015 and 4016 Bolts |
| 54 | Component - Exit Indicator - |
| 55 | Component - 2-Pt Panic Device - Adams Rite G86 with concealed vertical rod (top/bottom) and latch assembly. |
| 56 | Component - Pile - Adhesive/non Adhesive backed |
| 57 | Component - Brush - Sweep |
| 58 | Component - Foam Block - |
| 59 | Hardware - Tie Rod - Plate |
| 60 | Hardware - Tie Rod - Nut - 5/16-18 - Steel |
| 61 | Hardware - Threaded Rod - 5/16-18 - Steel |
| 62 | Hardware - 5/16 - 18 - Nut - Steel |
| 63 | Hardware - Tie Rod / Rail - Plate - Steel |
| 64 | Hardware - 7/16-20 Jamb Nut - Steel |
| 65 | Hardware - 7/16 SO Pivot Pin - Steel |
| 66 | Hardware - 5/8-11 Nut - Steel |
| 74 | Component - Steel Plate - Panic Reinforcing (48" Min.) |
| 75 | Component - Key Operator - Adams Rite |
| 76 | Component - Lock Flange (Int) - "Wind Clip" |
| 77 | Component - Lock Flange (Ext) - "Wind Clip" |
| 79 | Component - Muntin Clip (with Panic) |
| 90 | Glazing - Wedge Vinyl - RM270864 by Trelleborg |
| 91 | Glazing - 3M Tape - |
| 92 | Glazing - Setting Block - |
| 94 | Extrusion - Key Strip |
| 95 | Extrusion - Threshold - Sq/Bvl - 4.5" |
| 96 | Extrusion - Bottom Rail O - 10" |
| 97 | Component - Ball Detent - SO |
| 98 | Component - Throw Bolt - Std - Adams Rite 4016 |
| 99 | Component - Guide - Throw Bolt - Adams Rite 4016 |
| 100 | Extrusion - 1"x1"x3/16" Angle |

NON-CALL OUT PART #S FROM 44,45, 67-73, 78, 80-89 ARE NOT PART OF BOM

PRODUCT REVIEWED
as complying with the Florida
Building Code
Acceptance No 18-0529.23
Expiration Date APR 04 2018
By
Miami Dade Product Control

FRANK L. BENNARDO, P.E.
# PE0046549
LICENSE No. 46549
STATE OF FLORIDA
PROFESSIONAL ENGINEER
10/22/2013


ENGINEERING EXPRESS®
160 SW 12th AVENUE, #206
DEERFIELD BEACH, FL 33442
Ph: (954) 354-0660 Fax: (954) 354-0443
WWW.ENGEXP.COM
CERT OF AUTH #9885
A. FRANK L. BENNARDO, P.E., INC. INNOVATION


STANLEY
ACCESS TECHNOLOGIES
65 SCOTT SWAMP ROAD, FARMINGTON, CT 06032

SERIES "DURA-STORM 2000/3000" AUTO SGD
BI-PARTING/SINGLE SLIDE (LMI)
MIAMI-DADE NOTICE OF ACCEPTANCE

| REMARKS | DRWN | CHKD | DATE |
|---|---|---|---|
| INIT ISSUE | KL | FLB | 07/01/12 |
| REVIEWER COMMENT | KL | FLB | 11/28/12 |
| ADD'L COMMENTS | KL | FLB | 01/28/13 |
| ADD'L COMMENTS | KL | FLB | 03/22/13 |
| ADD'L COMMENTS | KL | FLB | 04/01/13 |
| REV. PER TESTING | KL | FLB | 05/17/13 |
| ADD'L COMMENTS | KL | FLB | 08/07/13 |
| ADD'L COMMENTS | KL | FLB | 10/03/13 |

12-SAT-13

SCALE: - 07

PAGE DESCRIPTION:
-
-