MIAMI-DADE COUNTY
DEPARTMENT OF REGULATORY AND ECONOMIC RESOURCES (RER)
BOARD AND CODE ADMINISTRATION DIVISION

MIAMI-DADE COUNTY
PRODUCT CONTROL SECTION
11805 SW 26 Street, Room 208
Miami, Florida 33175-2474
T (786) 315-2590 F (786) 315-2599
www.miamidade.gov/economy

NOTICE OF ACCEPTANCE (NOA)

Rollac Shutters of Texas, Inc.
5331 W. Orange Street
Pearland, TX 77581

SCOPE:
This NOA is being issued under the applicable rules and regulations governing the use of construction materials. The documentation submitted has been reviewed and accepted by Miami-Dade County RER-Product Control Section to be used in Miami Dade County and other areas where allowed by the Authority Having Jurisdiction (AHJ).

This NOA shall not be valid after the expiration date stated below. The Miami-Dade County Product Control Section (In Miami Dade County) and/or the AHJ (in areas other than Miami Dade County) reserve the right to have this product or material tested for quality assurance purposes. If this product or material fails to perform in the accepted manner, the manufacturer will incur the expense of such testing and the AHJ may immediately revoke, modify, or suspend the use of such product or material within their jurisdiction. RER reserves the right to revoke this acceptance, if it is determined by Miami-Dade County Product Control Section that this product or material fails to meet the requirements of the applicable building code.

This product is approved as described herein, and has been designed to comply with the High Velocity Hurricane Zone the Florida Building Code.

DESCRIPTION: A-200-H Slat Extruded Aluminum Roll-Up Shutter – L.M.I.

APPROVAL DOCUMENT: Drawing No. **12-039**, titled " A-200-H Slat Roll-Up Shutter ", prepared by Tilteco, Inc., sheets 1 through 13 of 13 (including sheet 1A), dated February 17, 2012, signed and sealed by Walter A. Tillit Jr., P.E., bearing the Miami-Dade County Product Control renewal stamp with the Notice of Acceptance number and the expiration date by the Miami-Dade County Product Control Section.

MISSILE IMPACT RATING: Large and Small Missile Impact Resistant

LABELING: Each unit shall bear a permanent label with the manufacturer's name or logo, city, state, the following statement: "Miami-Dade County Product Control Approved" and NOA number, per TAS-201, TAS-202, and TAS-203, unless otherwise noted herein.

RENEWAL of this NOA shall be considered after a renewal application has been filed and there has been no change in the applicable building code negatively affecting the performance of this product.

TERMINATION of this NOA will occur after the expiration date or if there has been a revision or change in the materials, use, and/or manufacture of the product or process. Misuse of this NOA as an endorsement of any product, for sales, advertising or any other purposes shall automatically terminate this NOA. Failure to comply with any section of this NOA shall be cause for termination and removal of NOA.

ADVERTISEMENT: The NOA number preceded by the words Miami-Dade County, Florida, and followed by the expiration date may be displayed in advertising literature. If any portion of the NOA is displayed, then it shall be done in its entirety.

INSPECTION: A copy of this entire NOA shall be provided to the user by the manufacturer or its distributors and shall be available for inspection at the job site at the request of the Building Official.

This NOA **renews NOA # 12-0315.15** and consists of this page 1 and evidence submitted pages E-1 & E-2, as well as approval document mentioned above.
The submitted documentation was reviewed by **Helmy A. Makar, P.E., M.S.**

MIAMI-DADE COUNTY APPROVED

08/01/2013

NOA No. 13-0529.27
Expiration Date: 05/26/2018
Approval Date: 08/01/2013

NOTICE OF ACCEPTANCE: EVIDENCE SUBMITTED

A. DRAWINGS

1. Drawing No. **12-039**, titled "A-200-H Slat Roll-Up Shutter", prepared by Tilteco, Inc., sheets 1 through 13 of 13 (including sheet 1A), dated 02/17/2012, signed and sealed by Walter A. Tillit, Jr., P.E.

B. TESTS *"Submitted under NOA # 09-0303.28"*

1. Test reports on 1) Uniform Static Air Pressure Test, Loading per FBC, TAS 202-94
   2) Large Missile Impact Test per FBC, TAS 201-94
   3) Cyclic Wind Pressure Loading per FBC, TAS 203-94
   4) Tensile Test per ASTM B557-06,

   Along with marked-up drawings and installation diagram of Series A-200 Extruded Aluminum Roll up Shutter, prepared by Fenestration Testing Laboratory, Inc., Test Report No. **FTL # 5852**, dated 02/26/2009, signed and sealed by Carlos S. Rionda, P.E.

C. CALCULATIONS *"Submitted under NOA # 09-0303.28"*

1. 2007 FBC revision calculations of A-200-H Slat Roll-up Shutters, prepared Tilteco, Inc., sheets 1 through 127 of 127, dated 06/29/2009, signed and sealed by Walter A. Tillit, Jr., P.E.

D. QUALITY ASSURANCE

1. Miami-Dade Department of Permitting, Environment, and Regulatory Affairs (PERA)

E. MATERIAL CERTIFICATIONS

1. None.

F. STATEMENTS

1. Statement letter of code conformance to 2010 issued by Tilteco, Inc., dated 03/13/2012, signed and sealed by Walter A. Tillit, Jr., P.E.

   "Submitted under NOA # 09-0303.28"

2. No financial interest letter issued by Tilteco, Inc., dated 07/15/2009, signed and sealed by Walter A. Tillit Jr., P.E.

Helmy A. Makar, P.E., M.S.
Product Control Unit Supervisor
NOA No. 13-0529.27
Expiration Date: 05/26/2018
Approval Date: 08/01/2013

NOTICE OF ACCEPTANCE: EVIDENCE SUBMITTED

2. NEW INFORMATION SUBMITTED

A. DRAWINGS

1. None.

B. TESTS

1. None.

C. CALCULATIONS

1. None.

D. QUALITY ASSURANCE

1. By Miami-Dade County Department of Regulatory and Economic Resources.

E. MATERIAL CERTIFICATIONS

1. None.

F. STATEMENTS

1. Statement letter of code conformance to 2010 issued by Tilteco, Inc., dated 05/15/2013, signed and sealed by Walter A. Tillit, Jr., P.E.

Helmy A. Makar, P.E., M.S.
Product Control Unit Supervisor
NOA No. 13-0529.27
Expiration Date: 05/26/2018
Approval Date: 08/01/2013

GENERAL NOTES:

1. ROLL-UP SHUTTER SHOWN ON THIS PRODUCT APPROVAL DOCUMENT (P.A.D.) HAS BEEN VERIFIED FOR CODE COMPLIANCE IN ACCORDANCE WITH THE **2007 & 2010** EDITIONS OF THE FLORIDA BUILDING CODE. THIS ROLL-UP SHUTTER MAY BE INSTALLED AT HIGH VELOCITY HURRICANE ZONES (MIAMI-DADE/BROWARD COUNTIES).

   DESIGN WIND LOADS SHALL BE DETERMINED AS PER SECTIONS **1620** OF THE ABOVE MENTIONED CODES, USING ASCE 7-05 STANDARD FOR INSTALLATIONS UNDER 2007 FBC & ASCE 7-10 FOR INSTALLATIONS UNDER 2010 FBC AND SHALL NOT EXCEED THE MAXIMUM (A.S.D.) DESIGN PRESSURE RATINGS INDICATED ON SHEETS 5, 6 & 8 THRU 13.

   IN ORDER TO VERIFY THE ABOVE CONDITION, ULTIMATE DESIGN WIND LOADS DETERMINED PER ASCE 7-10 SHALL BE FIRST REDUCED TO A.S.D. DESIGN WIND LOADS BY MULTIPLYING THEM BY 0.6 IN ORDER TO COMPARE THESE W/ MAX. (A.S.D.) DESIGN PRESSURE RATINGS INDICATED ON SHEETS 5, 6 & 8 THRU 13.

   IN ORDER TO VERIFY THAT COMPONENTS AND ANCHORS ON THIS P.A.D. AS TESTED WERE NOT OVER STRESSED, A 33% INCREASE IN ALLOWABLE STRESS FOR WIND LOADS WAS NOT USED IN THEIR ANALYSIS. FASTENERS SPACING INTO WOOD HAS BEEN DETERMINED IN ACCORDANCE WITH N.D.S. 2005.

   ROLL-UP SHUTTER'S ADEQUACY FOR IMPACT AND FATIGUE RESISTANCE HAS BEEN VERIFIED IN ACCORDANCE WITH SECTION **1626** OF THE ABOVE MENTIONED CODE AS PER TAS-201, 202 & 203 PROTOCOLS, AS PER HURRICANE TESTING LAB. REPORTS # 0187-0406-99, 0187-0423-99, 0187-0413-99, 0187-0414-99.

2. ALL ALUMINUM EXTRUSIONS SHALL BE ALUMINUM ASSOCIATION 6063-T5 ALLOY & TEMPER (UNLESS OTHERWISE NOTED).

3. ALL SCREWS TO BE STAINLESS STEEL 304 OR 316 AISI SERIES OR CORROSION RESISTANT COATED CARBON STEEL AS PER DIN 50018 WITH 50 ksi YIELD STRENGTH AND 90 ksi TENSILE STRENGTH. ALL TEK SCREWS SHALL BE AS MANUFACTURED BY ITW BUILDEX, INC. & SHALL COMPLY W/ FLORIDA BUILDING CODE SECTION 2411.3.3.4.

4. BOLTS TO BE ASTM A-307 GALVANIZED STEEL OR AISI 304 SERIES STAINLESS STEEL, WITH 36 ksi MINIMUM YIELD STRENGTH.

5. STORM BARS AT FLOOR AND CEILING MOUNTING INSTALLATIONS MAY BE REMOVABLE AT NON HURRICANE CONDITIONS. HOWEVER, EACH STORM BAR SHALL BEAR A PERMANENT LABEL IN A VISIBLE PLACE WITH A WARNING NOTE INSTRUCTING THE TENANT OR OWNER THAT STORM BARS MUST BE INSTALLED WITH CORRESPONDING HARDWARE DURING PERIODS OF HURRICANE WARNING AND THAT ROLL UP SHUTTERS WILL NOT OFFER HURRICANE PROTECTION UNLESS ALL STORM BAR ARE INSTALLED AS DIRECTED.

6. ANCHORS TO WALL FOR SIDE RAILS & BOX CONNECTION SHALL BE AS FOLLOWS (UNLESS OTHERWISE NOTED):

   (A) TO EXISTING POURED CONCRETE (Min. f'c=3192 psi):
   - 1/4"ø TAPCON ANCHORS, AS MANUFACTURED BY ITW BUILDEX, INC.

   NOTES:
   A.1) MINIMUM EMBEDMENT OF TAPCON ANCHORS INTO POURED CONCRETE IS 1 3/4". NO EMBEDMENT INTO STUCCO SHALL BE CONSIDERED AS PART OF THE REQUIRED EMBEDMENT.
   A.2) IN CASE THAT PRECAST STONE, PRECAST CONCRETE PANELS, OR PAVERS BE FOUND ON THE EXISTING WALL OR FLOOR, ANCHORS SHALL BE LONG ENOUGH TO REACH THE MAIN STRUCTURE BEHIND SUCH PANELS. ANCHORAGE SHALL BE AS INDICATED ON NOTE A.1 ABOVE.

   (B) TO EXISTING CONCRETE BLOCK WALL (ASTM C-90):
   - 1/4"ø TAPCON ANCHORS AS MANUFACTURED BY ITW BUILDEX, INC.

   NOTES:
   B.1) MINIMUM EMBEDMENT OF TAPCON ANCHORS INTO CONCRETE BLOCK UNIT SHALL BE 1 1/4".
   B.2) IN CASE THAT PRECAST STONE OR PRECAST CONCRETE PANELS BE FOUND ON THE EXISTING WALL, ANCHORS SHALL BE LONG ENOUGH TO REACH THE MAIN STRUCTURE BEHIND SUCH PANELS. ANCHORAGE SHALL BE AS INDICATED ON NOTE B.1 ABOVE.

   (C) TO EXISTING WOOD FRAME BUILDING: SOUTHERN PINE #2 W/ G=0.55 MIN.
   - 1/4"ø LAG SCREWS PER N.D.S.

   NOTES:
   C.1) MINIMUM THREADED PENETRATION OF LAG SCREWS INTO THE WOOD FRAME UNIT SHALL BE 1 1/2" NO THREADED PENETRATION INTO STUCCO SHALL BE CONSIDERED AS PART OF THE REQUIRED THREADED PENETRATION.
   C.2) MINIMUM EDGE DISTANCE OF LAG SCREWS INTO WOOD SHALL BE AS INDICATED ON SHEET 9.
   C.3) IN CASE THAT PRECAST STONE, PRECAST CONCRETE OR BRICK PANELS, VENEER OR PAVERS BE FOUND ON THE EXISTING WALL, ANCHORS SHALL BE LONG ENOUGH TO REACH THE MAIN SUBSTRATE BEHIND SUCH PANELS. MINIMUM THREADED PENETRATION SHALL BE AS INDICATED ON NOTE C.1 ABOVE.

PRODUCT REVISED
as complying with the Florida Building Code
Acceptance No 12-0315.15
Expiration Date 05/26/2013
By
Miami Dade Product Control

7. ANCHORS SHALL BE INSTALLED FOLLOWING ALL OF THE RECOMMENDATIONS AND SPECIFICATIONS OF THE ANCHOR'S MANUFACTURER.

8. ANCHORS REQUIRED FOR STORM BARS, HEADER & MULLIONS CONNECTIONS TO CONCRETE (MIN. f'c=3000 psi) SHALL BE AS SPECIFIED ON APPLICABLE SECTIONS SHOWN ON SHEETS 5, 6, 7 & 8 OF 13 RESPECTIVELY.

   -CALK-IN ANCHORS TO BE AS MANUFACTURED BY POWERS FASTENERS, INC.
   -TAPCON ANCHORS AS MANUFACTURED BY ITW BUILDEX, INC.
   -KWIK BOLT TZ EXPANSION ANCHORS AS MANUFACTURED BY HILTI, INC.

   MINIMUM EDGE DISTANCE AND SPACING FOR ABOVE MENTIONED ANCHORS SHALL BE AS INDICATED BELOW OR AT ABOVE MENTIONED SHEET. EDGE DISTANCE AND EMBEDMENT ARE BEYOND ANY FINISH MATERIAL.

ANCHOR	SPACING	EDGE DISTANCE	MINIMUM EMBEDMENT POURED CONCRETE	MINIMUM EMBEDMENT CONCRETE BLOCK
-1/4"ø TAPCON	3"	3"	1 3/4" (Min. f'c=3192 psi)	1 1/4" (ASTM C-90)
-1/4"ø CALK-IN	2 1/2"	3"	7/8" (Min. f'c=3000 psi)	–
-3/8"ø CALK-IN	3 3/4"	4 1/2"	1 1/4" (Min. f'c=3000 psi)	–
-5/16"ø TAPCON XL	3 3/4"	4"	–	1 3/4" (ASTM C-90, GROUT FILLED)
-3/8"ø KWIK BOLT TZ	6"	4 3/8"	2" (Min. f'c=3000 psi)	–

9. IT SHALL BE THE RESPONSIBILITY OF THE CONTRACTOR TO VERIFY THE SOUNDNESS OF THE STRUCTURE WHERE SHUTTER IS TO BE ATTACHED TO INSURE PROPER ANCHORAGE. THIS SHUTTER SHALL ONLY BE ATTACHED TO CONCRETE, BLOCK OR WOOD FRAME BUILDINGS.

10. THE INSTALLATION CONTRACTOR IS TO SEAL/CAULK ALL SHUTTER COMPONENT EDGES WHICH REMAIN IN CONTINUOUS CONTACT WITH THE BUILDING TO PREVENT WIND/RAIN INTRUSION. CAULK AND SEAL SHUTTER TRACKS ALL AROUND FULL LENGTH.

11. A-150-H & A-200-H SLATS FOAM PLASTIC CORE SHALL CONSIST OF 100/100 PARTS BY WEIGHT OF ELASTOPOR R P12041 R(1.06 SPECIFIC GRAVITY) RESIN + ELASTOPOR R P1001 U(1.22 SPECIFIC GRAVITY) ISOCYANATE. SLATS FOAM PLASTIC CORE SURFACE BURNING CHARACTERISTICS HAVE BEEN VERIFIED IN ACCORDANCE WITH SECTION 2612.3 OF THE FLORIDA BUILDING CODE AS PER CELOTEX CORPORATION TEST REPORT #520274A & 520536 RESPECTIVELY.

12. SHUTTER MANUFACTURER'S LABEL SHALL BE PLACED ON THE EXPOSED SURFACE OF THE SIDE RAIL APPROXIMATELY 4" ABOVE THE BOTTOM OF SUCH RAIL.
    LABEL SHALL READ AS FOLLOWS:
    ROLLAC SHUTTER OF TEXAS, INC.
    PEARLAND, TX.
    MIAMI-DADE COUNTY PRODUCT CONTROL APPROVED.

PRODUCT RENEWED
as complying with the Florida Building Code
Acceptance No 13-0529.27
Expiration Date 05/26/2018
By
Miami Dade Product Control

13. ROLL-UP MECHANISM NOT PART OF THIS APPROVAL, BUT SHALL BE CERTIFIED BY AN INDEPENDENT TESTING AGENCY.

14. ROLL-UP SHUTTER INSTALLATION SHALL COMPLY WITH SPECS INDICATED IN THIS DRAWING PLUS ANY BUILDING AND ZONING REGULATIONS PROVIDED BY THE JURISDICTION WHERE PERMIT IS APPLIED TO.

15. (a) THIS P.A.D. PREPARED BY THIS ENGINEER IS GENERIC AND DOES NOT PROVIDE INFORMATION FOR A SITE SPECIFIC PROJECT; i.e. WHERE THE SITE CONDITIONS DEVIATE FROM THE P.A.D.

    (b) CONTRACTOR TO BE RESPONSIBLE FOR THE SELECTION, PURCHASE AND INSTALLATION INCLUDING LIFE SAFETY OF THIS PRODUCT, BASED ON THIS P.A.D. PROVIDED HE/SHE DOES NOT DEVIATE FROM THE CONDITIONS DETAILED ON THIS DOCUMENT. CONSTRUCTION SAFETY AT SITE IS THE CONTRACTOR'S RESPONSIBILITY.

    (c) THIS P.A.D. WILL BE CONSIDERED INVALID IF ALTERED BY ANY MEANS.

    (d) SITE SPECIFIC PROJECTS SHALL BE PREPARED BY A FLORIDA REGISTERED ENGINEER OR ARCHITECT WHICH WILL BECOME THE ENGINEER OF RECORD (E.O.R.) FOR THE PROJECT AND WHO WILL BE RESPONSIBLE FOR THE PROPER USE OF THE P.A.D.
    ENGINEER OF RECORD, ACTING AS A DELEGATED ENGINEER TO THE P.A.D. ENGINEER, SHALL SUBMIT TO THIS LATTER THE SITE SPECIFIC DRAWINGS FOR REVIEW.

    (e) THIS P.A.D. SHALL BEAR THE DATE AND ORIGINAL SEAL AND SIGNATURE OF THE PROFESSIONAL ENGINEER OF RECORD THAT PREPARED IT.

WALTER A. TILLIT JR. LICENSE No. 44167 STATE OF FLORIDA PROFESSIONAL ENGINEER

FLORIDA BUILDING CODE (High Velocity Hurricane Zone)

©2012 TILTECO, INC.

TILTECO INC.
TILLIT TESTING & ENGINEERING COMPANY
6355 N.W. 36th. St., Ste. 305, VIRGINIA GARDENS, FL 33166
Phone : (305)871-1530 , Fax : (305)871-1531
e-mail: tilteco@aol.com
EB-0006719
WALTER A. TILLIT Jr. P.E.
FLORIDA Lic. # 44167

A-200-H SLAT ROLL-UP SHUTTER

ROLLAC SHUTTERS OF TEXAS, INC.
5331 ORANGE STREET
PEARLAND, TX. 77581
PHONE: (800) 880-0922, FAX: (281) 485-0839

REV. No	DESCRIPTION	DATE	REV. No	DESCRIPTION	DATE
1	OLD 09-125	02/17/12	3		
2			4		

DRAWN BY: L.G./A.G.
02/17/12 DATE
12-039 DRAWING No
SHEET 1 OF 13

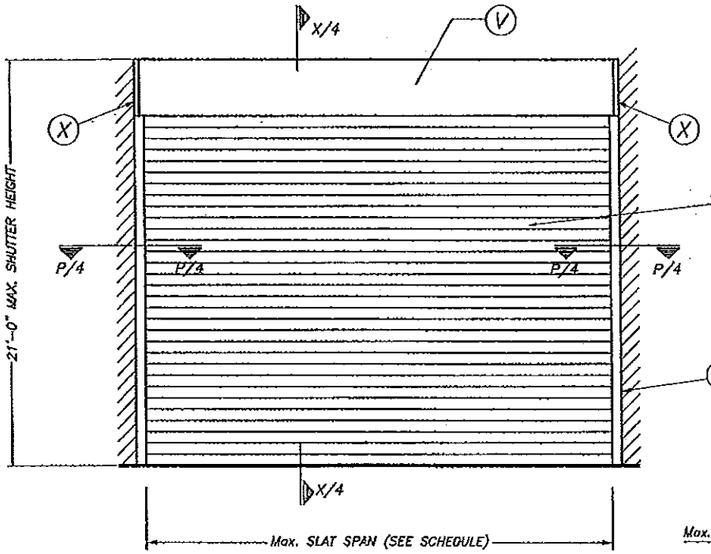

TYPICAL SINGLE UNIT ELEVATION (NO STORM BARS REQUIRED)

NOTE: SEE SHEET 2 & 3 OF 13 FOR COMPONENTS NOMENCLATURE.

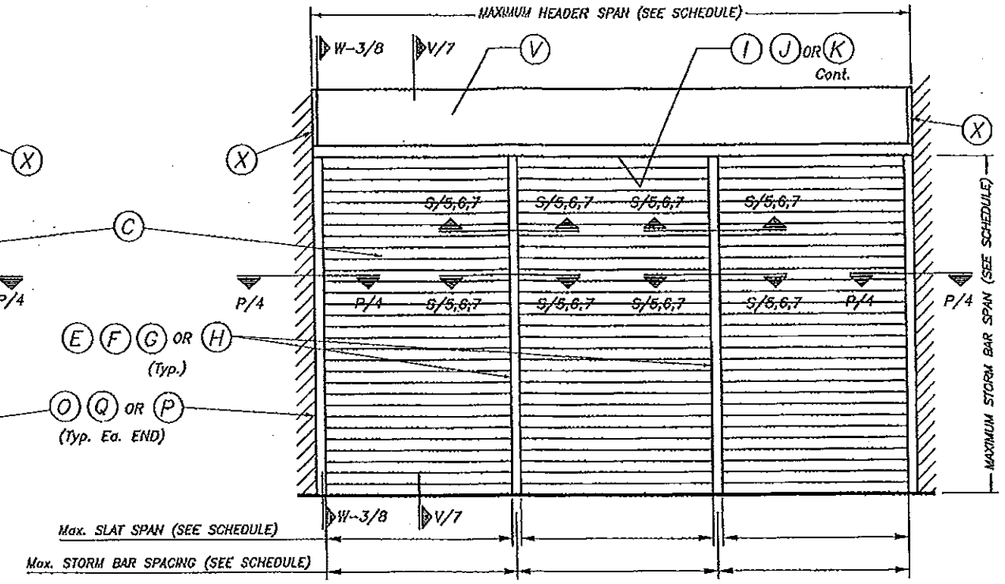

TYPICAL MULTIPLE UNIT ELEVATION (STORM BARS REQUIRED)

NOTE: SEE SHEET 2 & 3 OF 13 FOR COMPONENTS NOMENCLATURE.

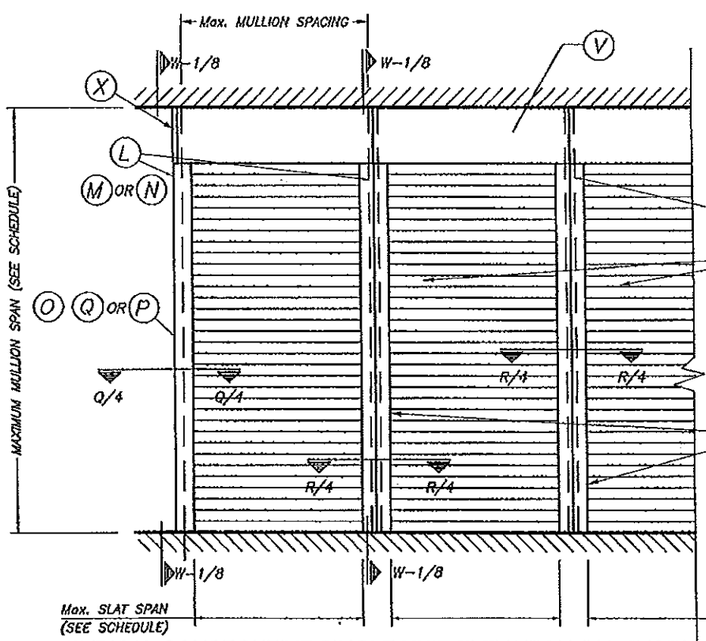

TYPICAL CONSECUTIVE SINGLE UNIT ELEVATION (NO STORM BARS REQUIRED)

NOTE: SEE SHEET 2 & 3 OF 13 FOR COMPONENTS NOMENCLATURE.

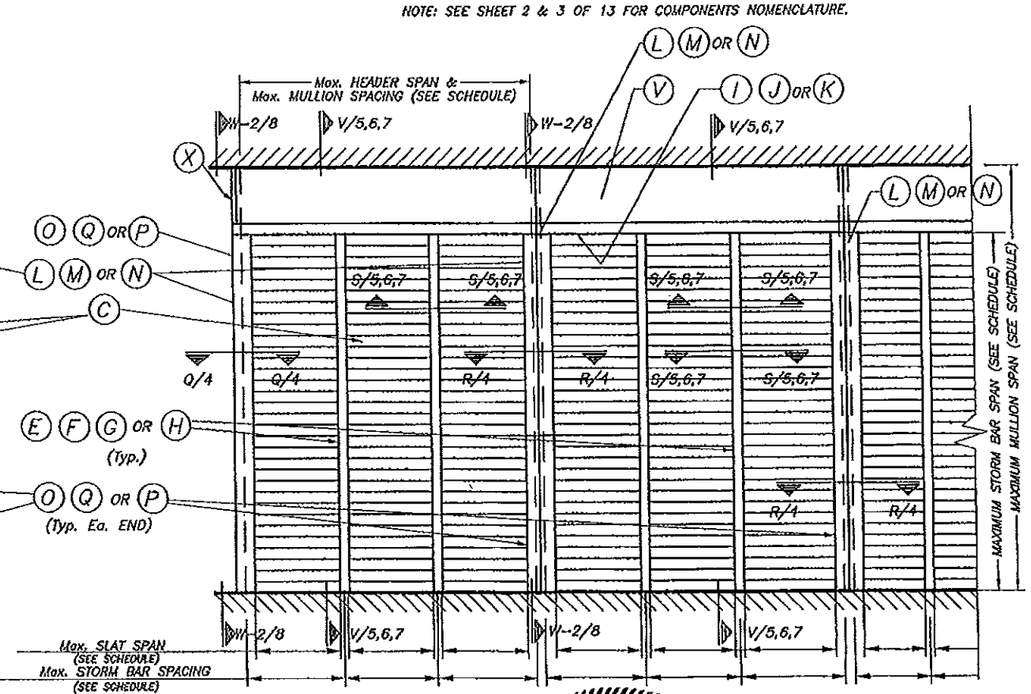

TYPICAL CONSECUTIVE MULTIPLE UNIT ELEVATION (STORM BARS REQUIRED)

NOTE: SEE SHEET 2 & 3 OF 13 FOR COMPONENTS NOMENCLATURE.

PRODUCT RENEWED
as complying with the Florida
Building Code
Acceptance No 13-0529.27
Expiration Date 05/26/2018
By
Miami Dade Product Control

PRODUCT REVISED
as complying with the Florida
Building Code
Acceptance No 12-0315.15
Expiration Date 05/26/2013
By
Miami Dade Product Control

WALTER A. TILLIT JR.
LICENSE
No. 44167
STATE OF FLORIDA
PROFESSIONAL ENGINEER

©2012 TILTECO, INC.

TILTECO INC.
TILLIT TESTING & ENGINEERING COMPANY
6355 N.W. 36th. St. Ste. 305, VIRGINIA GARDENS, FL 33166
Phone : (305)871-1530 . Fax : (305)871-1531
e-mail: tilteco@aol.com
EB-0008719
WALTER A. TILLIT Jr. P.E.
FLORIDA Lic. # 44167

FLORIDA BUILDING CODE (High Velocity Hurricane Zone)

A-200-H SLAT ROLL-UP SHUTTER

ROLLAC SHUTTERS OF TEXAS, INC.

5331 ORANGE STREET
PEARLAND, TX. 77581
PHONE: (800) 880-0922, FAX: (281) 485-0839

REV. No	DESCRIPTION	DATE	REV. No	DESCRIPTION	DATE
1	OLD 09-125	02/17/12	3		
2			4		

DRAWN BY:	L.G./A.G.
DATE	02/17/12
DRAWING No	12-039
	SHEET 1A OF 13

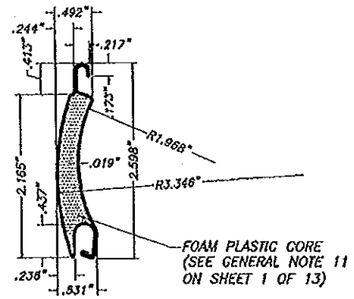

(C) TYPE 1 SLAT:

A-200-H SLAT
55mm (t = .019") HIGH DENSITY FOAM PLASTIC CORE SHEET METAL ALUMINUM SLAT
3005-H48 ALUMINUM ALLOY
SCALE: 1/2" = 1"

NOTE:
TYPE 1 SLAT SHALL BE INSTALLED W/ SIDE LOCKS AT EVERY OTHER SLAT.

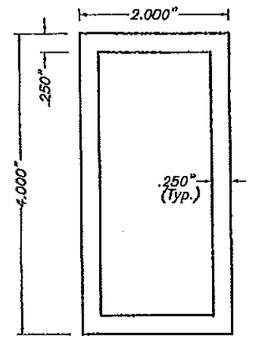

(E) TYPE 1 STORM BAR:

4" HEAVY EXTRUDED STORM BAR
6063-T6 ALUMINUM ALLOY
SCALE: 1/2" = 1"

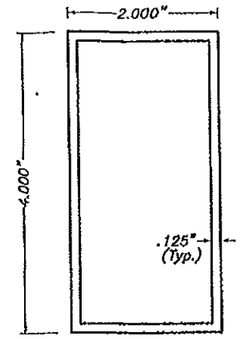

(F) TYPE 2 STORM BAR:

4" EXTRUDED STORM BARS
6063-T6 ALUMINUM ALLOY
SCALE: 1/2" = 1"

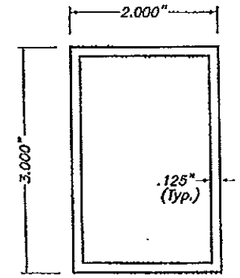

(G) TYPE 3 STORM BAR:

3" EXTRUDED STORM BARS
6063-T6 ALUMINUM ALLOY
SCALE: 1/2" = 1"

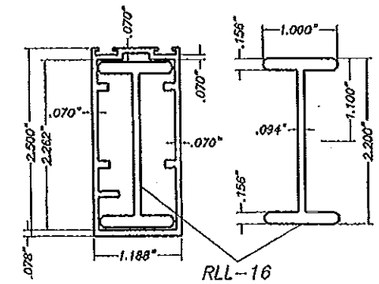

(H) TYPE 4 STORM BAR:

RLL-15 + RLL-16 EXTRUDED STORM BAR
6063-T5 ALUMINUM ALLOY
SCALE: 1/2" = 1"

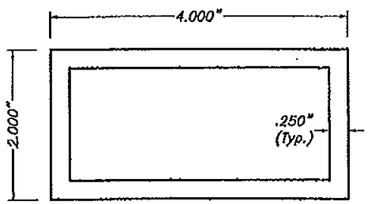

(I) TYPE 1 HEADER:

4" HEAVY EXTRUDED HEADER
6063-T6 ALUMINUM ALLOY
SCALE: 1/2" = 1"

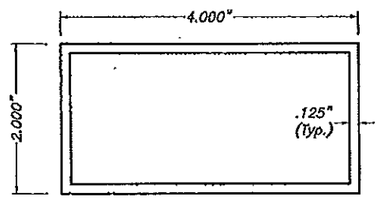

(J) TYPE 2 HEADER:

4" EXTRUDED HEADER
6063-T6 ALUMINUM ALLOY
SCALE: 1/2" = 1"

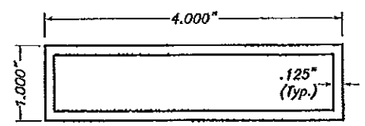

(K) TYPE 3 HEADER:

1"x4" EXTRUDED HEADER
6063-T5 ALUMINUM ALLOY
SCALE: 1/2" = 1"

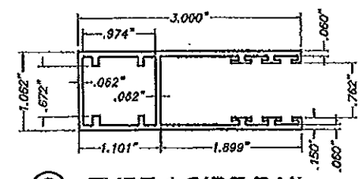

(O) TYPE 1 SIDE RAIL

RLL-25 SIDE RAIL
6063-T5 ALUMINUM ALLOY
SCALE: 1/2" = 1"

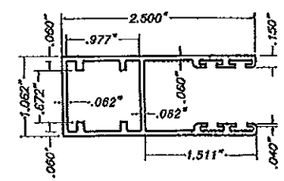

(Q) TYPE 2 SIDE RAIL

RLL-1 SIDE RAIL
6063-T5 ALUMINUM ALLOY
SCALE: 1/2" = 1"

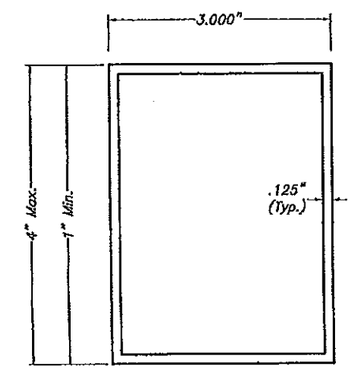

(Y) BUILD-OUT TUBES

3"x4" EXTRUDED TUBE
6063-T5 ALUMINUM ALLOY
SCALE: 1/2" = 1"

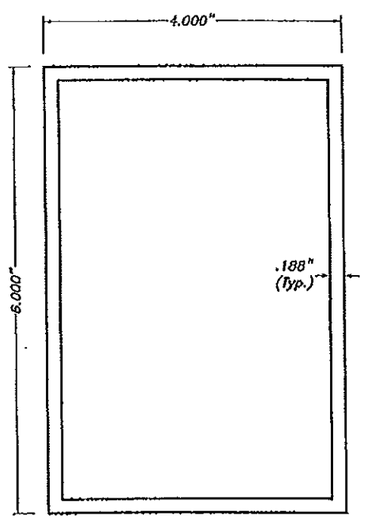

(L) TYPE 1 MULLION:

6" EXTRUDED MULLION
6063-T5 ALUMINUM ALLOY

SCALE: 1/2" = 1"

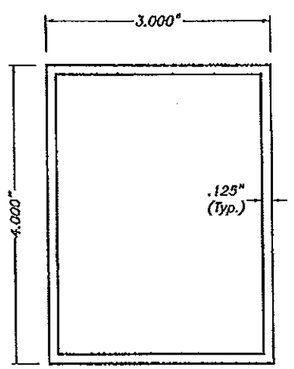

(M) TYPE 2 MULLION:

4" EXTRUDED MULLION
6063-T5 ALUMINUM ALLOY
SCALE: 1/2" = 1"

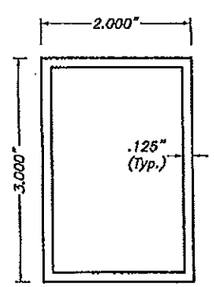

(N) TYPE 3 MULLION:

3" EXTRUDED MULLION
6063-T6 ALUMINUM ALLOY
SCALE: 1/2" = 1"

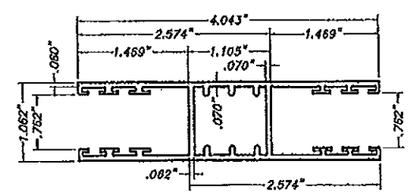

(T) TYPE 3 SIDE RAIL

RLL-7 SIDE RAIL
6063-T5 ALUMINUM ALLOY
SCALE: 1/2" = 1"

PRODUCT RENEWED
as complying with the Florida Building Code
Acceptance No 13-0529.27
Expiration Date 05/26/2018
By
Miami Dade Product Control

PRODUCT REVISED
as complying with the Florida Building Code
Acceptance No 12-0315.15
Expiration Date 05/26/2013
By
Miami Dade Product Control

WALTER A. TILLIT JR.
LICENSE
No. 44167
STATE OF FLORIDA
PROFESSIONAL ENGINEER

FLORIDA BUILDING CODE (High Velocity Hurricane Zone)

©2012 TILTECO, INC.

TILTECO INC.
TILLIT TESTING & ENGINEERING COMPANY
6355 N.W. 36th. St., Ste. 305, VIRGINIA GARDENS, Fl. 33166
Phone : (305)871-1530 , Fax : (305)871-1531
e-mail: tilteco@aol.com
EB-0006719
WALTER A. TILLIT Jr. P.E.
FLORIDA Lic. # 44167

A-200-H SLAT ROLL-UP SHUTTER

ROLLAC SHUTTERS OF TEXAS, INC.
5331 ORANGE STREET
PEARLAND, TX. 77581
PHONE: (800) 880-0922, FAX: (281) 485-0839

REV. No	DESCRIPTION	DATE	REV. No	DESCRIPTION	DATE
1	OLD 09-125	02/17/12	3		
2			4		

DRAWN BY: L.G./A.O.
02/17/12 DATE
12-039 DRAWING No
SHEET 2 OF 13

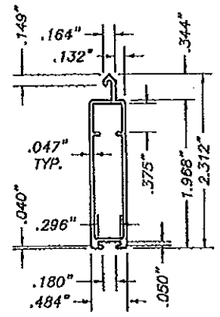

RLL-6
EXTRUDED ALUMINUM
6063-T5 ALUMINUM ALLOY

(14) DETAIL

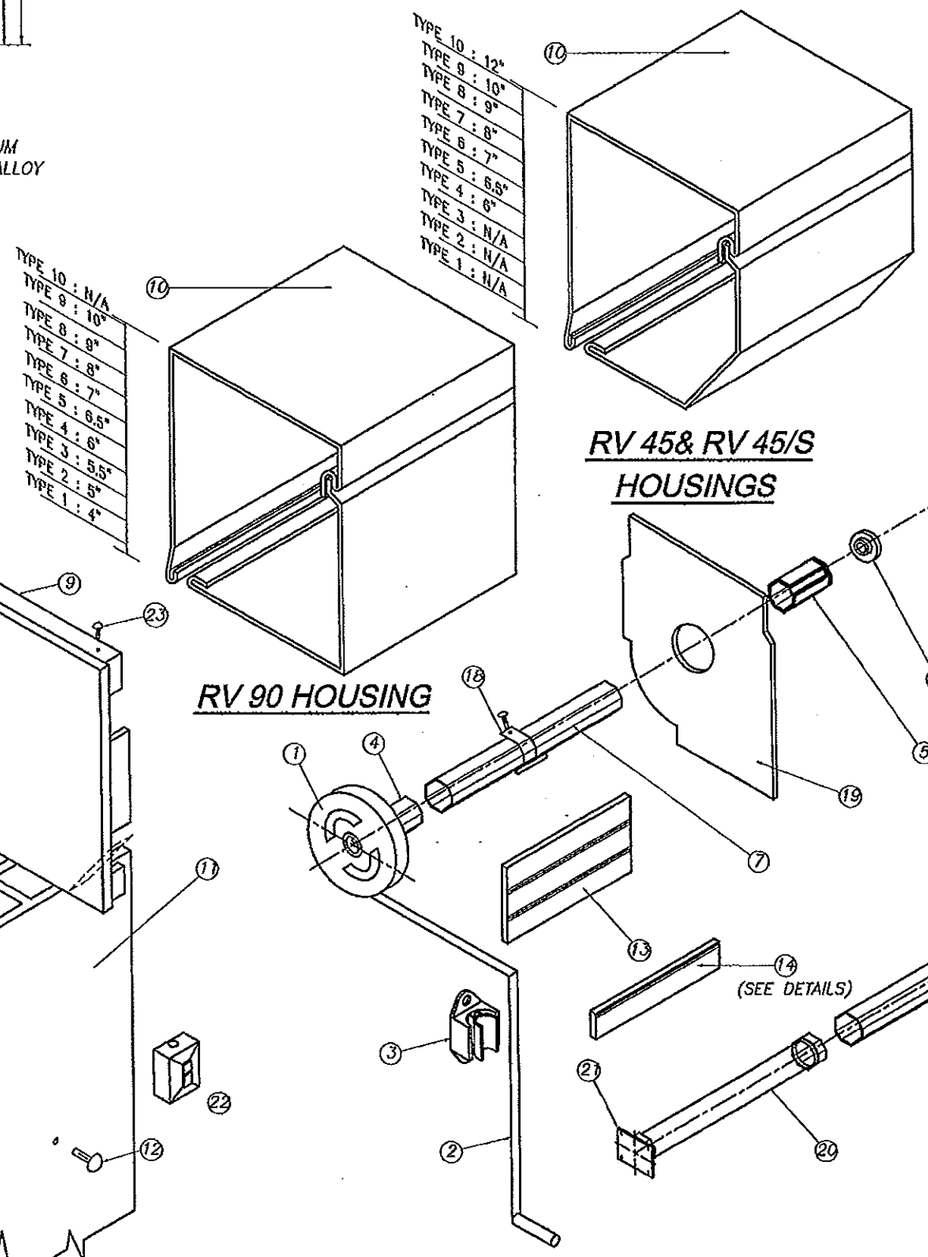

RV 45& RV 45/S HOUSINGS

RV 90 HOUSING

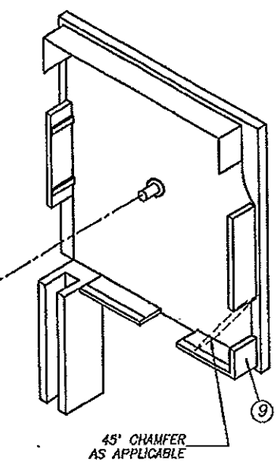

(V) BOX COMPONENTS AND ASSEMBLY DETAIL

(SEE NOTE 13 ON SHEET 1)

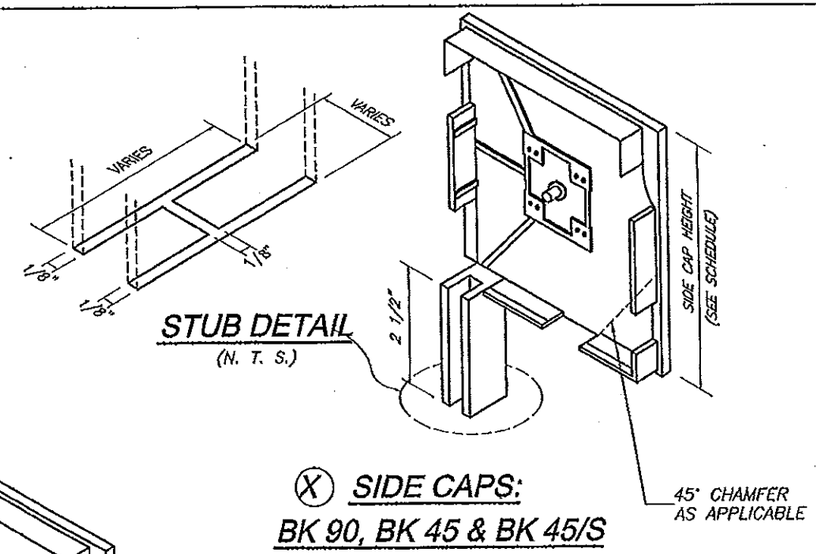

STUB DETAIL

(N. T. S.)

(X) SIDE CAPS: BK 90, BK 45 & BK 45/S

COMPONENTS FOR GEAR OPERATED SYSTEM

(1) – GEAR
(2) – UNIVERSAL & CRANK
(3) – CRANK HOLDER(OPTIONAL)
(4) – GEAR INSERT(GEAR TO AXLE CONNECTOR)
(5) – IDLER INSERT
(6) – BALL BEARING
(7) – OCTAGONAL AXLE *
(9) – SIDE/END CAP *
(10) – HOUSING(FRONT & BOTTOM), 0.040" THICK
(11) – SIDE RAIL
(12) – PLUG-BUTTOMS
(13) – ALUMINUM SLATS
(14) – BASE SLAT
(15) – PLASTIC STOPS(OPTIONAL)
(16) – SIDE LOCKS(OPTIONAL)
(17) – STAPLES(OPTIONAL)
(18) – SPRINGLOCK HANGER
(19) – SAFETY PLATES

ADDITIONAL COMPONENTS FOR MOTORIZED OPERATED SYSTEM

(20) – TUBULAR MOTOR
(21) – MOTOR BRACKET
(22) – SWITCH

FASTENERS

(23) – 3/16" ALUMINUM POP RIVETS(6 REQ'D EA. SIDE CAP) : 2 @ TOP, 2 @ REAR, 2@ BOTTOM

SIDE CAP HEIGHT SCHEDULE		
TYPE	90°	45°
1	4.0"	N/A
2	5.0"	N/A
3	5.5"	N/A
4	6.0"	6.0"
5	6.5"	6.5"
6	7.0"	7.0"
7	8.0"	8.0"
8	9.0"	9.0"
9	10.0"	10.0"
10	N/A	12.0"

N/A = NOT APPLICABLE

* SHALL BE CAPABLE TO SUSTAIN SLAT'S WEIGHT AND ASSURE LIFTING MECHANISM (SEE NOTE 13/1).

PRODUCT REVISED
as complying with the Florida
Building Code
Acceptance No 12-0315.15
Expiration Date 05/26/2013
By
Miami Dade Product Control

PRODUCT RENEWED
as complying with the Florida
Building Code
Acceptance No 13-0529.27
Expiration Date 05/26/2018
By
Miami Dade Product Control

WALTER A. TILLIT JR.
LICENSE
No. 44167
STATE OF FLORIDA
PROFESSIONAL ENGINEER

FLORIDA BUILDING CODE (High Velocity Hurricane Zone)

©2012 TILTECO, INC.

TILTECO INC.
TILLIT TESTING & ENGINEERING COMPANY
6355 N.W. 36th. St., Ste. 305, VIRGINIA GARDENS, FL 33166
Phone : (305)871-1530 . Fax : (305)871-1531
e-mail: tilteco@aol.com
EB-0006719
WALTER A. TILLIT Jr. P.E.
FLORIDA Lic. # 44167

A-200-H SLAT ROLL-UP SHUTTER

ROLLAC SHUTTERS OF TEXAS, INC.
5331 ORANGE STREET
PEARLAND, TX. 77581
PHONE: (800) 880-0922, FAX: (281) 485-0839

REV. No	DESCRIPTION	DATE	REV. No	DESCRIPTION	DATE
1	OLD 09-125	02/17/12	3		
2			4		

DRAWN BY: L.G./A.O.
02/17/12 DATE
12-039 DRAWING No
SHEET 3 OF 13

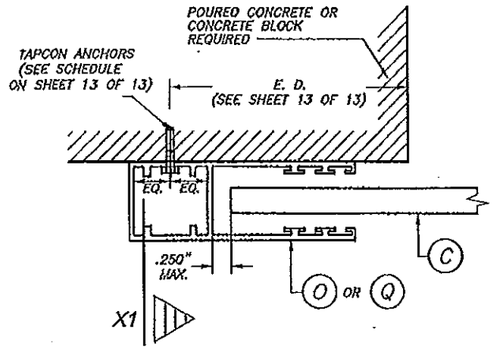

SECTION P - P (1) : WALL MOUNT

SCALE: FULL

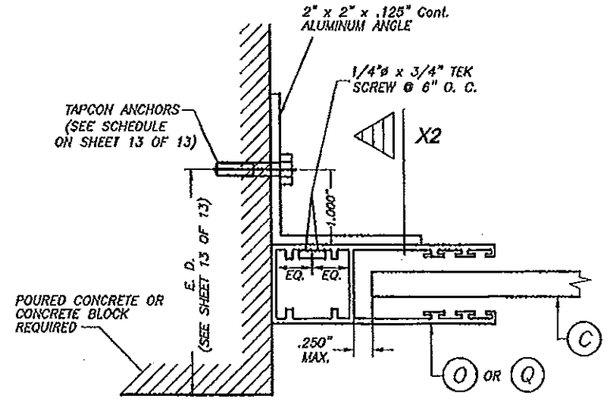

SECTION P - P (2) : SIDE WALL MOUNT

SCALE: 1/2" = 1"

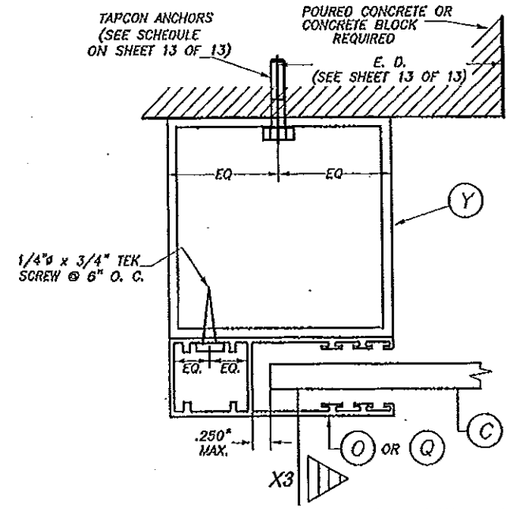

SECTION P - P (3) : BUILD-OUT

SCALE: 1/2" = 1"

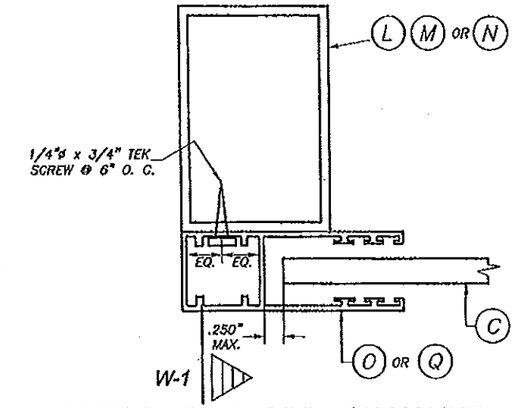

SECTION Q - Q : MULLION MOUNT

SCALE: 1/2" = 1"

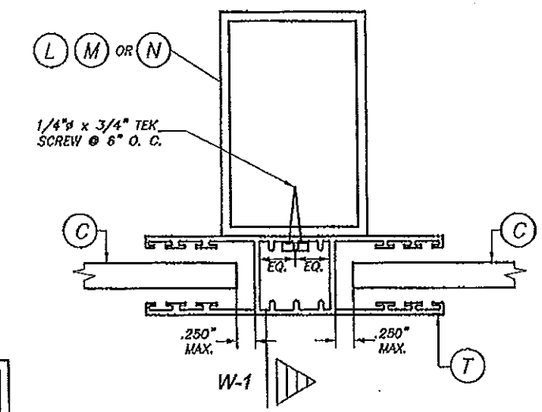

SECTION R - R : MULLION MOUNT

SCALE: 1/2" = 1"

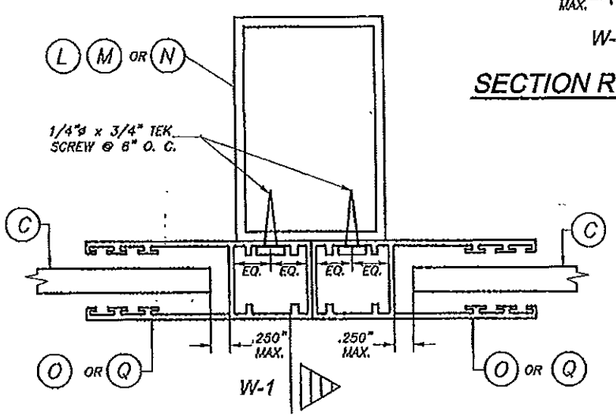

SECTION R - R : MULLION MOUNT

SCALE: 1/2" = 1"

PRODUCT RENEWED
as complying with the Florida
Building Code
Acceptance No 13-0529.27
Expiration Date 05/26/2018
By
Miami Dade Product Control

PRODUCT REVISED
as complying with the Florida
Building Code
Acceptance No 12-0315.15
Expiration Date 05/26/2013
By
Miami Dade Product Control

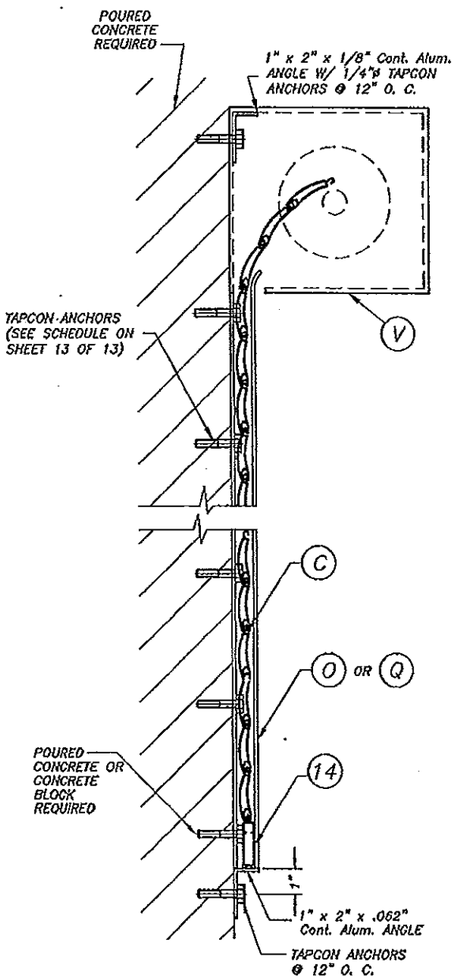

SECTION X - X (1)

N. T. S.

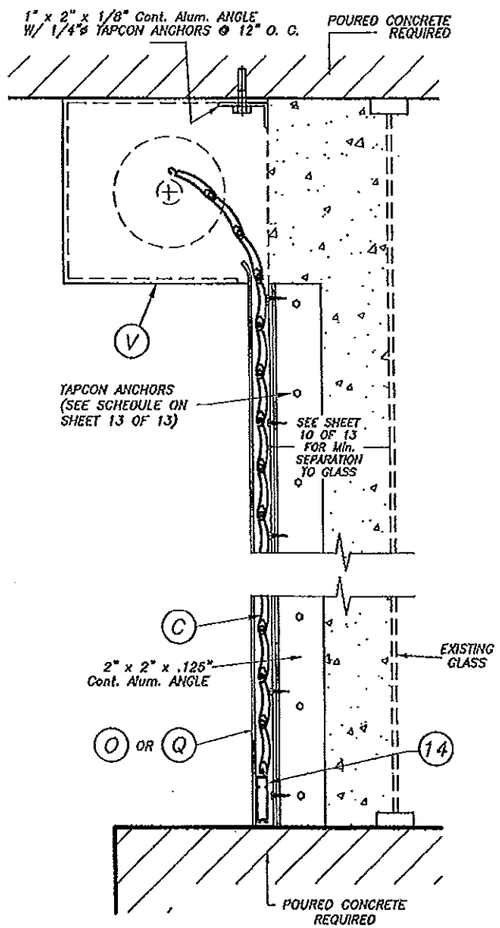

SECTION X - X (2)

N. T. S.

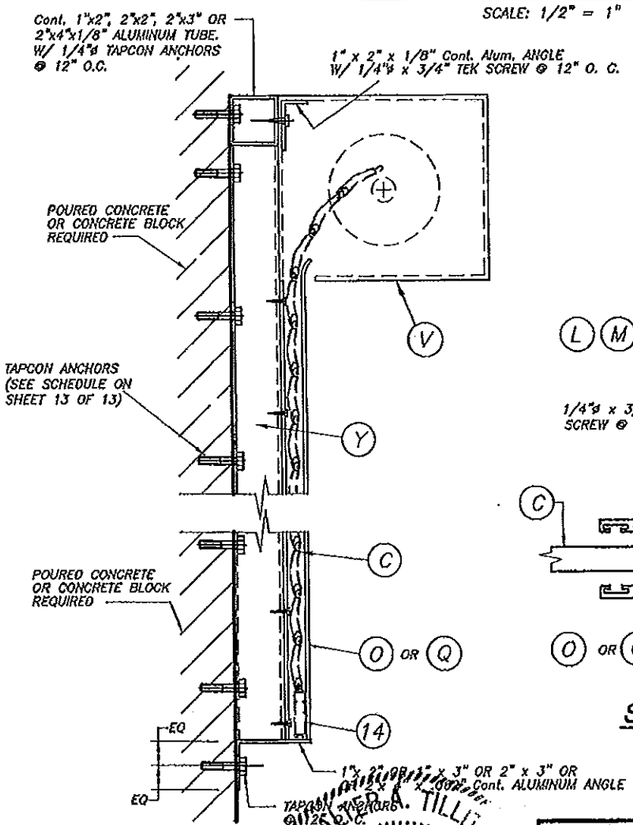

SECTION X - X (3)

N. T. S.

WALTER A. TILLIT JR.
LICENSE
No. 44167
STATE OF FLORIDA
PROFESSIONAL ENGINEER

FLORIDA BUILDING CODE (High Velocity Hurricane Zone)

©2012 TILTECO, INC.

TILTECO INC.
TILLIT TESTING & ENGINEERING COMPANY
6355 N.W. 36th, St. Ste. 305, VIRGINIA GARDENS, FL 33166
Phone : (305)871-1830 . Fax : (305)871-1531
e-mail: tilteco@aol.com
EB-0006719
WALTER A. TILLIT Jr. P.E.
FLORIDA Lic. # 44167

A-200-H SLAT ROLL-UP SHUTTER

ROLLAC SHUTTERS OF TEXAS, INC.
5331 ORANGE STREET
PEARLAND, TX. 77581
PHONE: (800) 880-0922, FAX: (281) 485-0839

REV. No	DESCRIPTION	DATE	REV. No	DESCRIPTION	DATE
1	OLD 09-125	02/17/12	3		
2			4		

DRAWN BY:	L.G./A.G.
DATE	02/17/12
DRAWING No	12-039
	SHEET 4 OF 13

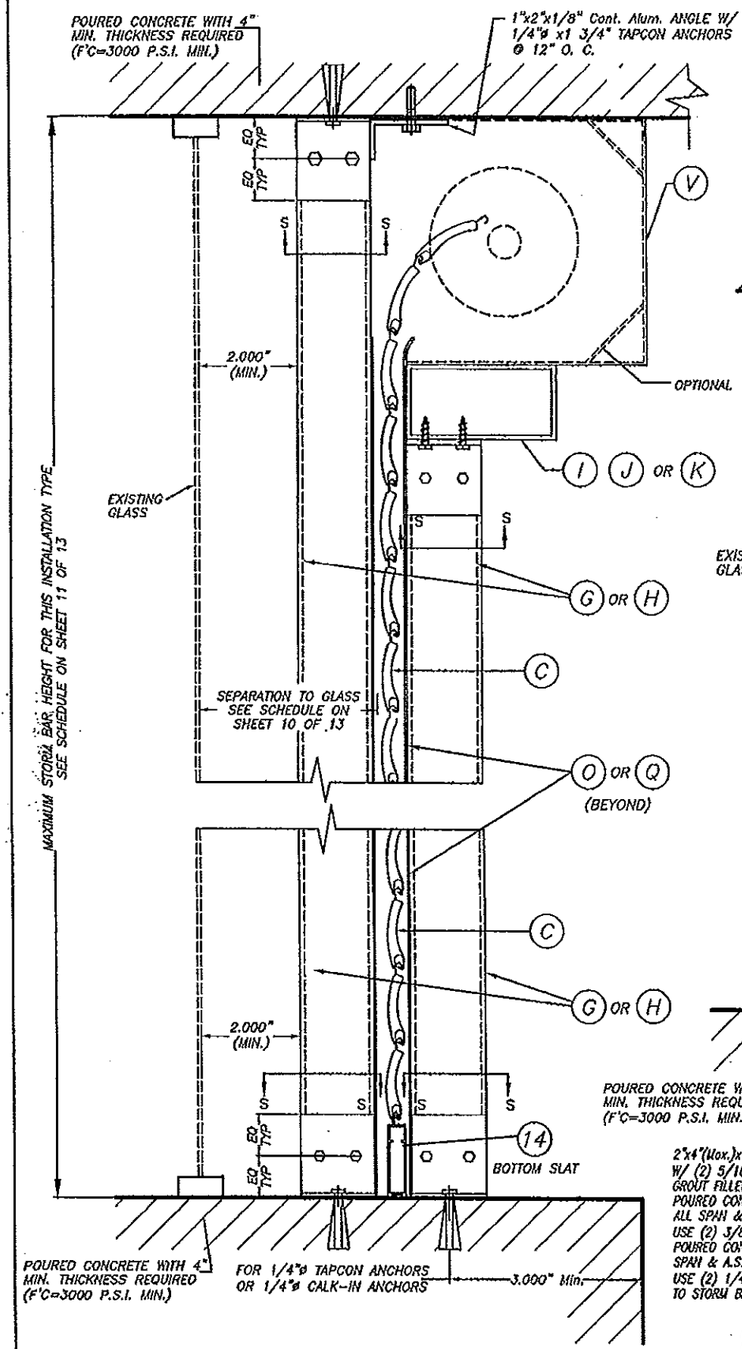

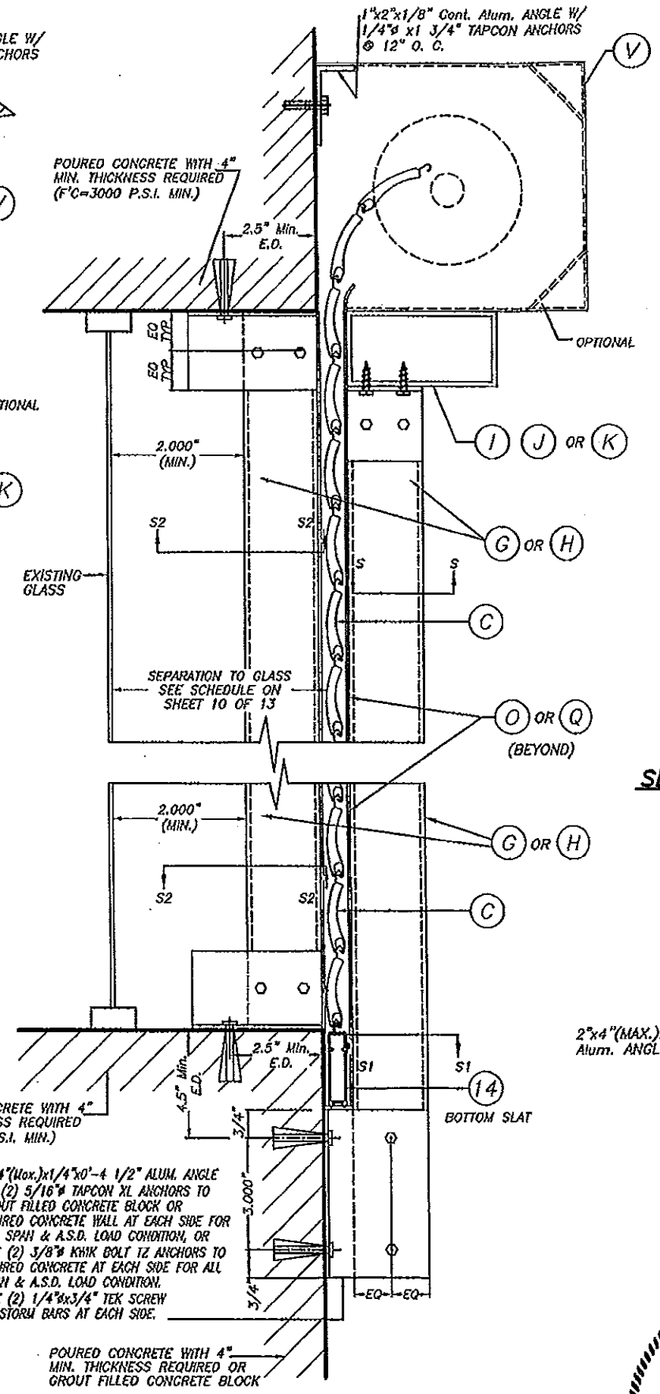

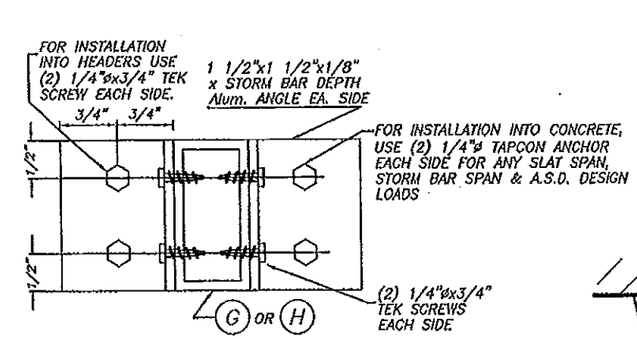

SECTION S – S (FOR FIXED STORM BAR)

SCALE : 1/2" = 1"

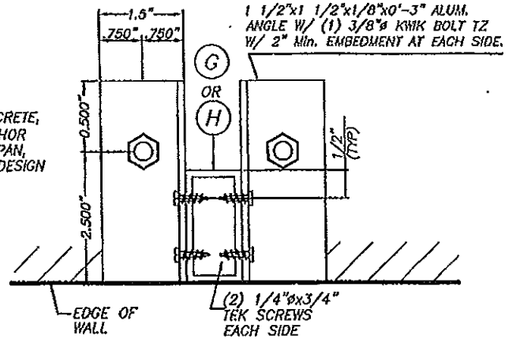

SECTION S2 – S2

SCALE : 1/4" = 1"

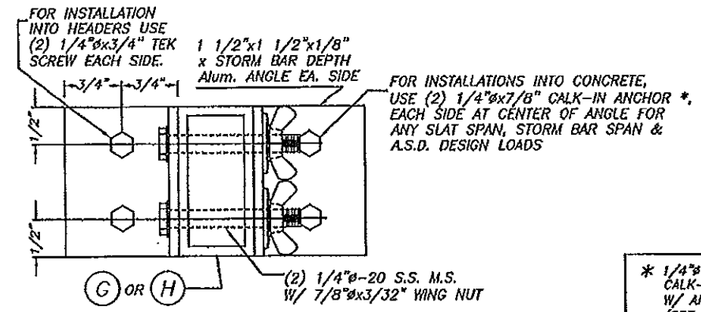

SECTION S – S (FOR REMOVABLE STORM BAR)

SCALE : 1/2" = 1"

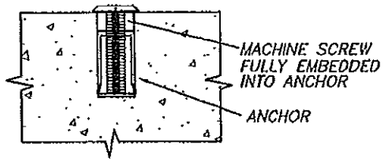

DETAIL A

SCALE : 1/2" = 1"

* 1/4"ø-20 MACHINE SCREWS USED JOINTLY W/ 1/4"øx7/8" CALK-IN ANCHORS RESPECTIVELY SHALL BE LEFT TOGETHER W/ ANCHORS AT THE TIME STORM BARS ARE REMOVED. (SEE DET. A).

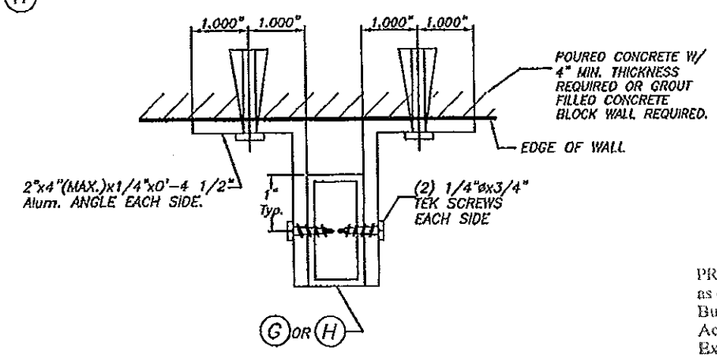

SECTION S1 - S1

SCALE : N. T. S.

PRODUCT RENEWED
as complying with the Florida Building Code
Acceptance No 13-0529.27
Expiration Date 05/26/2018
By
Miami Dade Product Control

PRODUCT REVISED
as complying with the Florida Building Code
Acceptance No 12-0315.15
Expiration Date 05/26/2013
By
Miami Dade Product Control

CEILING & FLOOR MOUNTING: SECTION V–V(2) INSTALLATION W/ FIXED OR REMOVABLE STORM BARS W/ CONCRETE ANCHORS

(SEE SECTION "S" FOR ANCHOR TYPE REQUIREMENT)

N.T.S.

SINGLE SPAN SECTIONS AND DETAILS ARE SIMILAR TO ABOVE SHOWN WITHOUT STORM BAR & HEADERS.

WALL MOUNTING: SECTION V–V(1) INSTALLATION W/ FIXED STORM BARS W/CONCRETE ANCHORS

SCALE : N.T.S.

SECTION V – V

WALTER A. TILLIT JR. LICENSE No. 44167 STATE OF FLORIDA PROFESSIONAL ENGINEER

FLORIDA BUILDING CODE (High Velocity Hurricane Zone)

©2012 TILTECO, INC.

TILTECO INC.
TILLIT TESTING & ENGINEERING COMPANY
6333 N.W. 36th St., Ste. 305, VIRGINIA GARDENS, FL 33166
Phone : (305)871-1530 . Fax : (305)871-1531
e-mail: tilteco@aol.com
EB-0006719
WALTER A. TILLIT Jr. P.E.
FLORIDA Lic. # 44167

A-200-H SLAT ROLL-UP SHUTTER

ROLLAC SHUTTERS OF TEXAS, INC.
5331 ORANGE STREET
PEARLAND, TX. 77581
PHONE: (800) 880-0922, FAX: (281) 485-0839

REV. No	DESCRIPTION	DATE	REV. No	DESCRIPTION	DATE
1	OLD 09-125	02/17/12	3		
2			4		

DRAWN BY: L.G./A.G.

02/17/12 DATE

12-039 DRAWING No

SHEET 5 OF 13

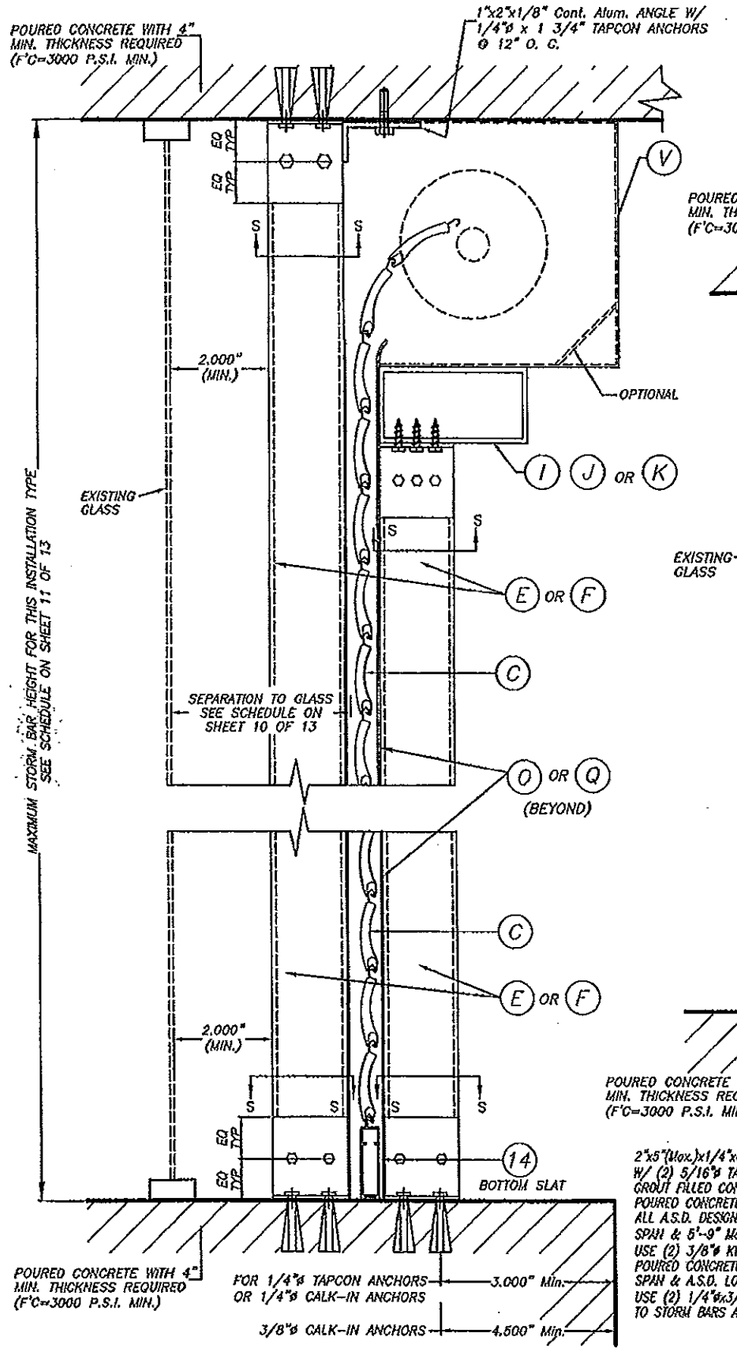

CEILING & FLOOR MOUNTING: SECTION V-V(2) INSTALLATION W/ FIXED OR REMOVABLE STORM BARS W/ CONCRETE ANCHORS

(SEE SECTION "S" FOR ANCHOR TYPE REQUIREMENT)

N.T.S.

SINGLE SPAN SECTIONS AND DETAILS ARE SIMILAR TO ABOVE SHOWN WITHOUT STORM BAR & HEADERS.

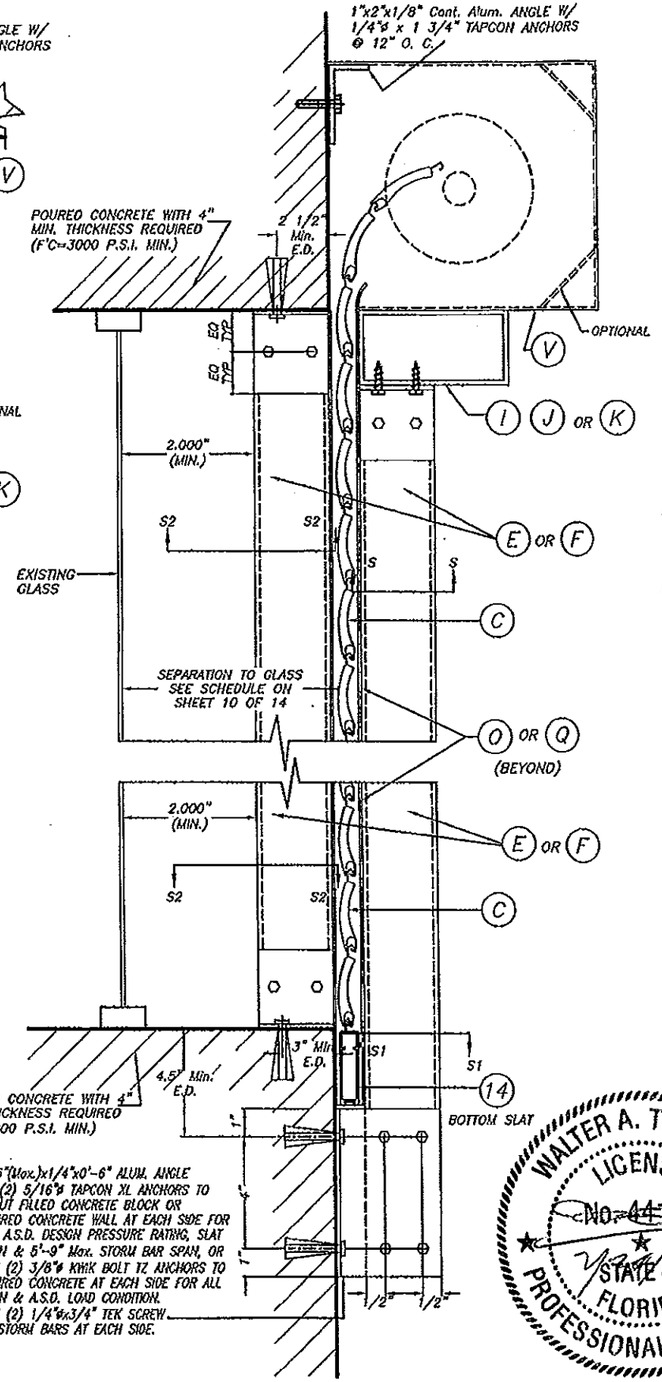

WALL MOUNTING: SECTION V-V(1) INSTALLATION W/ FIXED STORM BARS W/CONCRETE ANCHORS

SCALE : N.T.S.

SECTION V - V

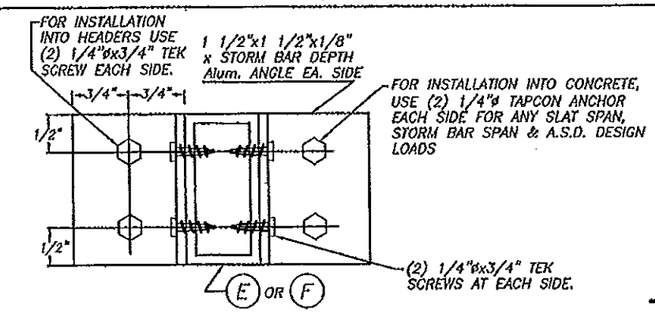

SECTION S - S (FOR FIXED STORM BAR)

SCALE : N.T.S.

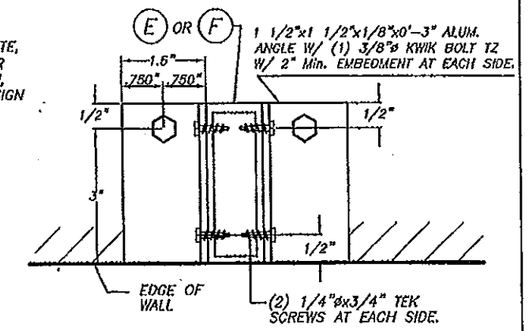

SECTION S2 - S2

SCALE : N.T.S.

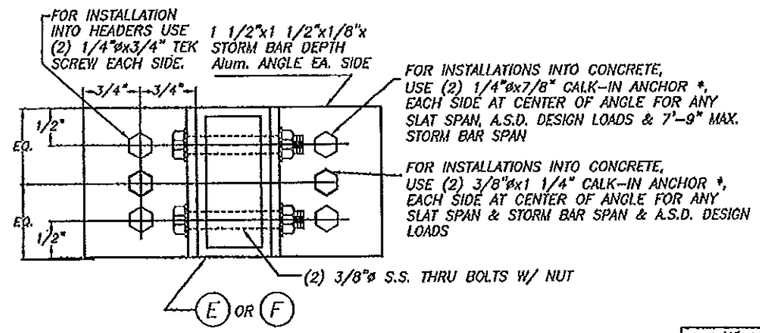

SECTION S - S (FOR REMOVABLE STORM BAR)

SCALE : N.T.S.

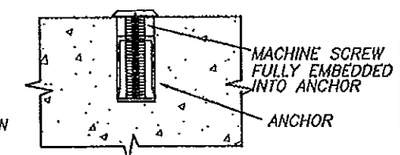

DETAIL A

SCALE : 1/2" = 1"

* 1/4" ø-20 OR 3/8" ø-16 MACHINE SCREWS USED JOINTLY W/ 1/4" ø x 7/8" OR 3/8" ø x 1 1/4" CALK-IN ANCHORS RESPECTIVELY SHALL BE LEFT TOGETHER W/ ANCHORS AT THE TIME STORM BARS ARE REMOVED. (SEE DET. A).

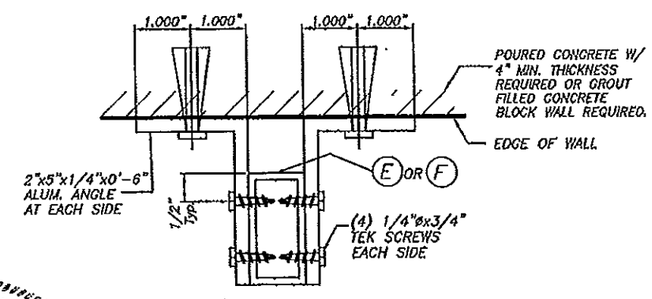

SECTION S1 - S1

SCALE : N. T. S.

WALTER A. TILLIT JR. LICENSE No. 44167 STATE OF FLORIDA PROFESSIONAL ENGINEER

PRODUCT RENEWED as complying with the Florida Building Code Acceptance No 13-0529.27 Expiration Date 05/26/2018 By Miami Dade Product Control

PRODUCT REVISED as complying with the Florida Building Code Acceptance No 12-0315.15 Expiration Date 05/26/2013 By Miami Dade Product Control

FLORIDA BUILDING CODE (High Velocity Hurricane Zone)

©2012 TILTECO, INC.

TILTECO INC.
TILLIT TESTING & ENGINEERING COMPANY
6355 N.W. 36th, St. Ste. 305, VIRGINIA GARDENS, FL 33166
Phone : (305)871-1530 . Fax : (305)871-1531
e-mail: tilteco@aol.com
EB-0008719
WALTER A. TILLIT Jr. P.E.
FLORIDA Lic. # 44167

A-200-H SLAT ROLL-UP SHUTTER

ROLLAC SHUTTERS OF TEXAS, INC.
5331 ORANGE STREET
PEARLAND, TX. 77581
PHONE: (800) 880-0922, FAX: (281) 485-0839

REV. No	DESCRIPTION	DATE	REV. No	DESCRIPTION	DATE
1	OLD 09-125	02/17/12	3		
2			4		

DRAWN BY: L.G./A.G.
02/17/12 DATE
12-039 DRAWING No
SHEET 6 OF 13

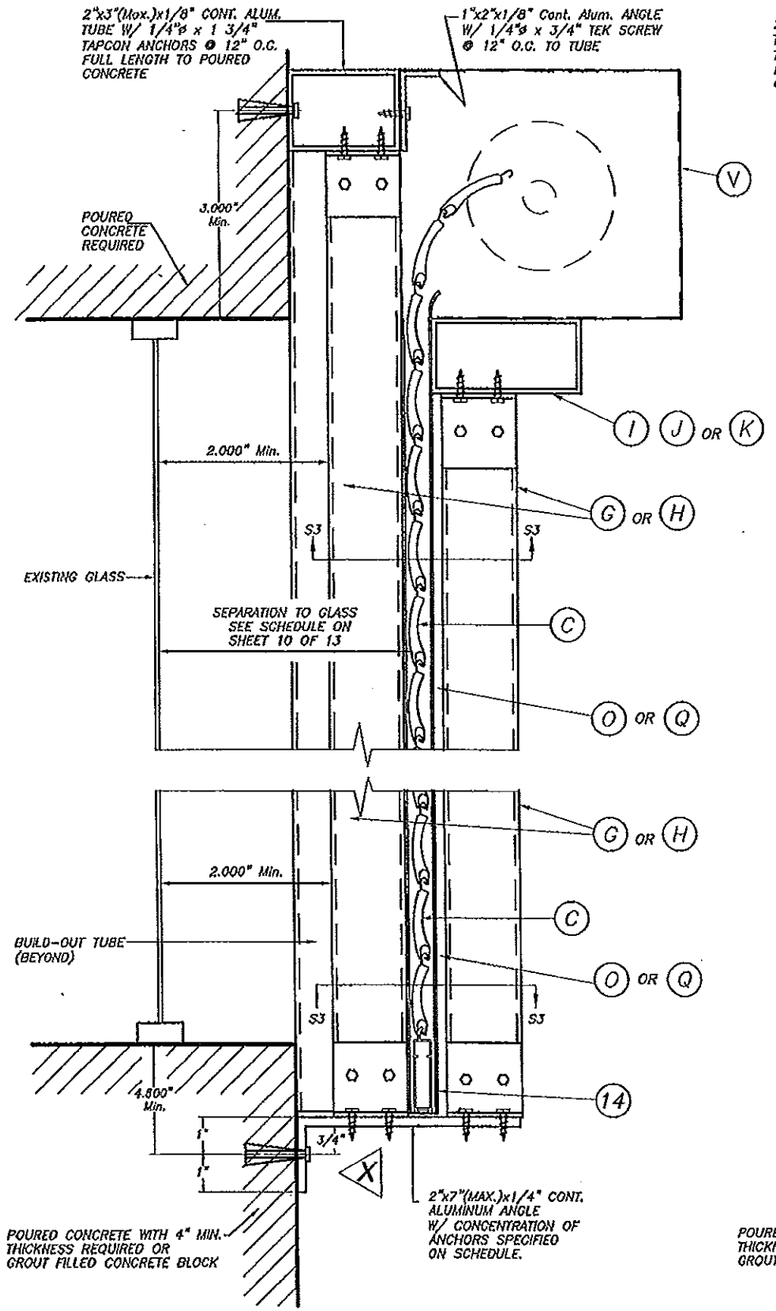

CASE I

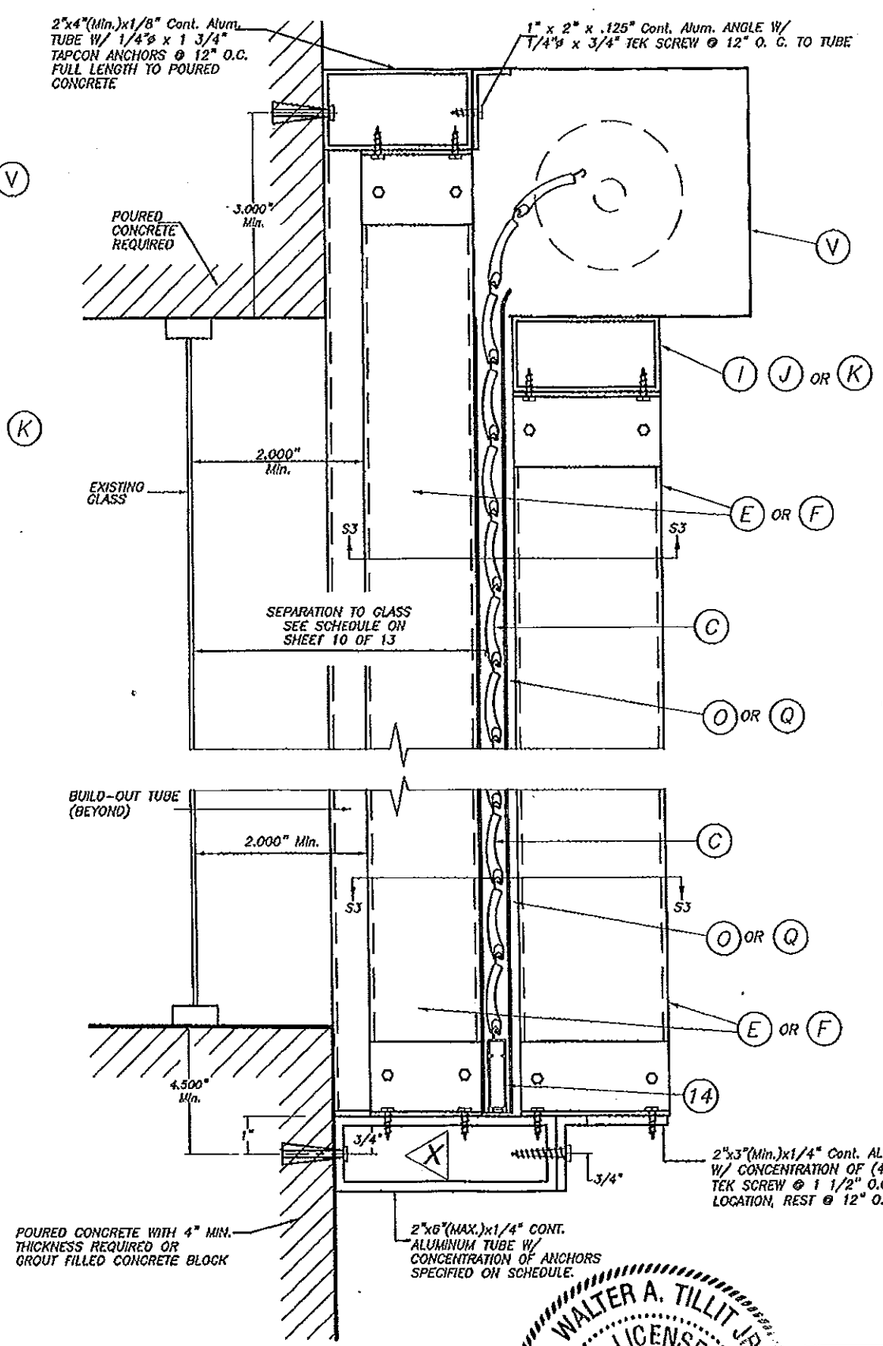

CASE II

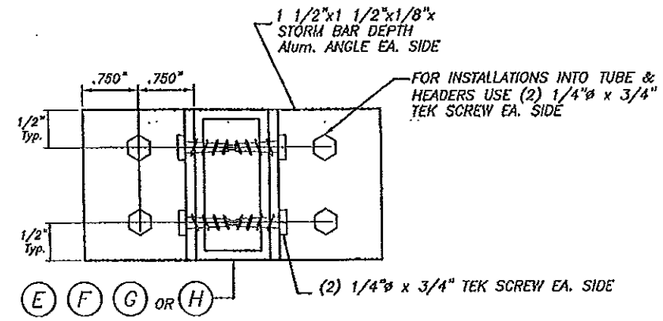

SECTION S3 - S3

SCALE : 1/2" = 1"

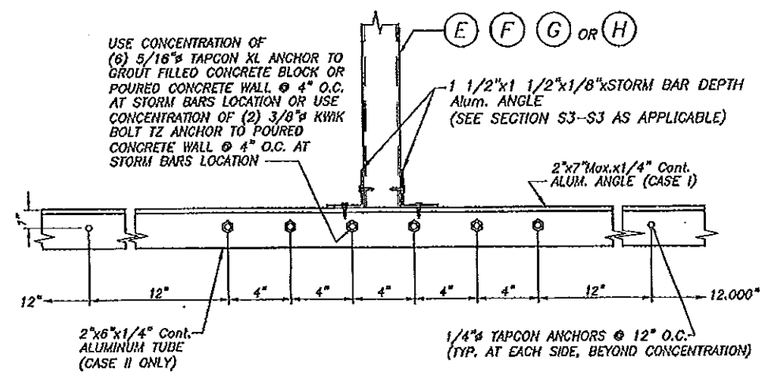

ELEVATION X

SCALE : 1/8" = 1"

PRODUCT RENEWED
as complying with the Florida
Building Code
Acceptance No 13-0529.27
Expiration Date 05/26/2018
By
Miami Dade Product Control

PRODUCT REVISED
as complying with the Florida
Building Code
Acceptance No 12-0315.15
Expiration Date 05/26/2013
By
Miami Dade Product Control

STORM BAR CONNECTION AT BUILD-OUT INSTALLATION : SECTIONS V - V (3)

SCALE : 1/4" = 1"

WALTER A. TILLIT JR. LICENSE No. 44167 STATE OF FLORIDA PROFESSIONAL ENGINEER

FLORIDA BUILDING CODE (High Velocity Hurricane Zone)

©2012 TILTECO, INC.

TILTECO INC.
TILLIT TESTING & ENGINEERING COMPANY
6333 N.W. 36th St. Ste. 305, VIRGINIA GARDENS, FL 33166
Phone : (305)871-1530 . Fax : (305)871-1531
e-mail: tilteco@aol.com
EB-0006719
WALTER A. TILLIT Jr. P.E.
FLORIDA Lic. # 44167

A-200-H SLAT ROLL-UP SHUTTER

ROLLAC SHUTTERS OF TEXAS, INC.
5331 ORANGE STREET
PEARLAND, TX. 77581
PHONE: (800) 880-0922, FAX: (281) 485-0839

REV. No	DESCRIPTION	DATE	REV. No	DESCRIPTION	DATE
1	OLD 09-125	02/17/12	3		
2			4		

DRAWN BY: L.G./A.G.
02/17/12 DATE
12-039 DRAWING No
SHEET 7 OF 13

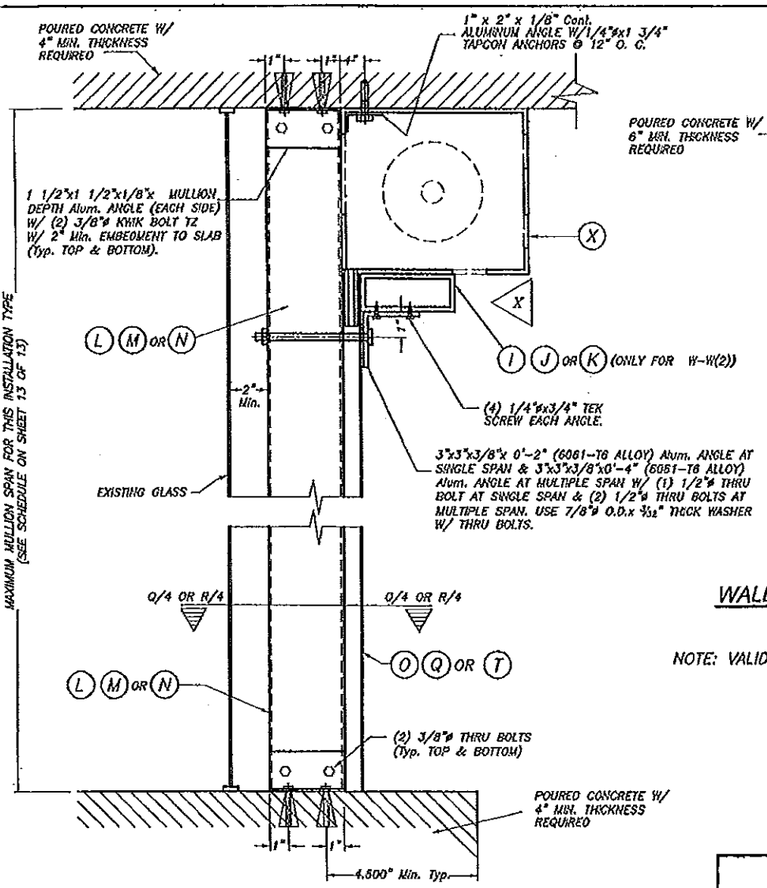

FLOOR/CEILING MOUNTING : SECTION W-W (1), W/O HEADER SECTION W-W (2), W/HEADER

SCALE : 1/8" = 1"

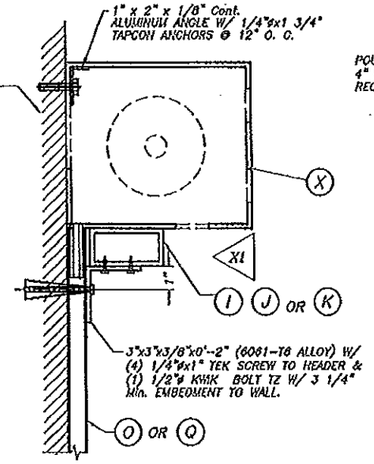

ALTERNATIVE :1 WALL MOUNTING : SECTION W-W (3)

SCALE : 1/8" = 1"

NOTE: VALID FOR ALL SPANS AND A.S.D. LOAD COMBINATIONS.

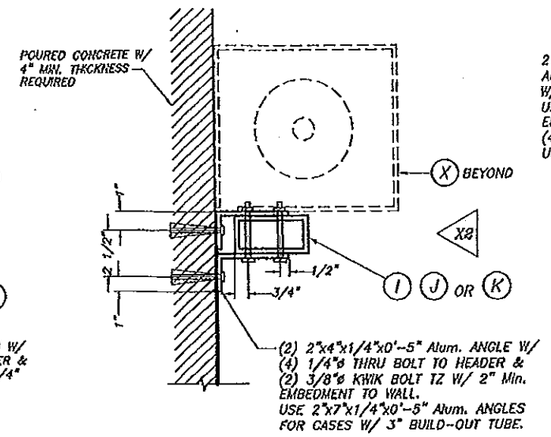

ALTERNATIVE :2 WALL MOUNTING : SECTION W-W(3)

SCALE : 1/8" = 1"

NOTE: VALID FOR ALL SPANS AND A.S.D. LOAD COMBINATIONS.

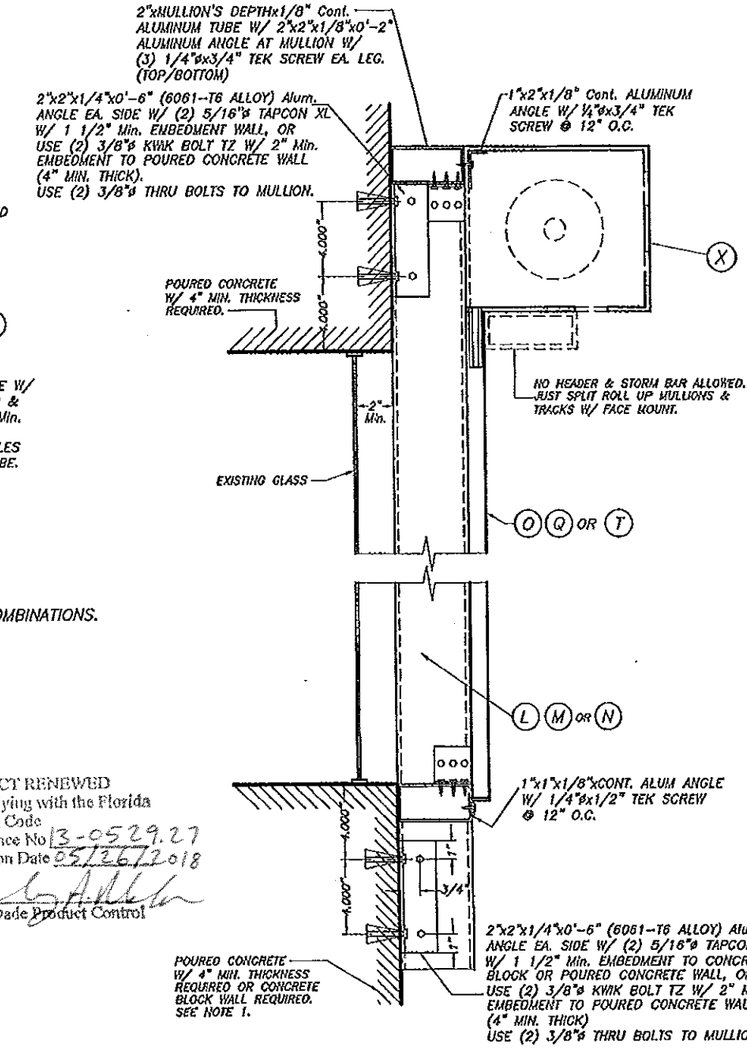

WALL MOUNTING : MULLION CONNECTION AT TOP & BOTTOM : SECTION W-W (1)

SCALE : 1/8" = 1"

NOTE 1:

EXISTING WALL MAY CONCRETE BLOCK FOR A.S.D. DESIGN PRESSURE RATING UP TO 130.0 psf W/ 4'-0" Max. MULLION SPAN AND 4'-0" Max. MULLION SPACING AND SHALL BE 4" MIN. THICK POURED CONCRETE FOR ALL GREATER MULLION SPAN AND LOAD COMBINATIONS.

PRODUCT RENEWED
as complying with the Florida Building Code
Acceptance No 13-0529.27
Expiration Date 05/26/2018
By
Miami Dade Product Control

PRODUCT REVISED
as complying with the Florida Building Code
Acceptance No 12-0315.15
Expiration Date 05/26/2013
By
Miami Dade Product Control

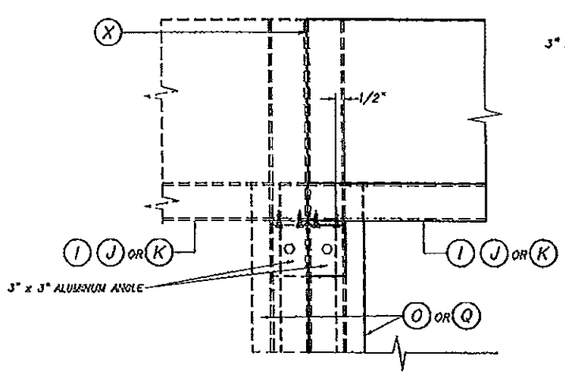

ELEVATION X

SCALE : 1/8" = 1"

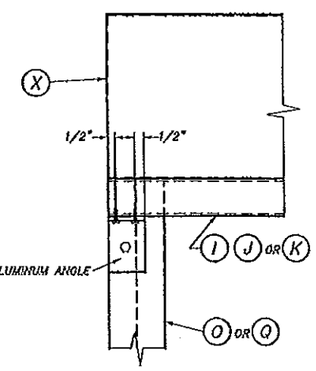

ELEVATION X1

SCALE : 1/8" = 1"

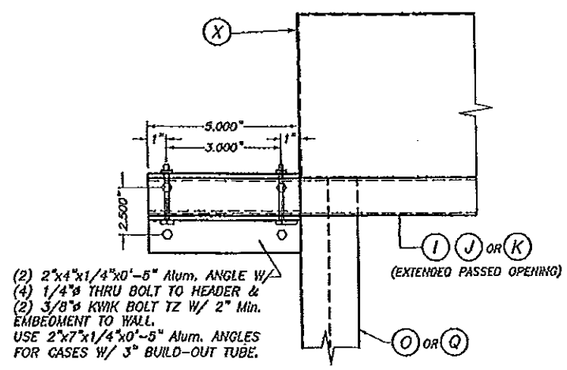

ELEVATION X2

SCALE : 1/8" = 1"

TYPICAL HEADER CONNECTION AT ENDS: SECTIONS W-W

WALTER A. TILLIT JR. LICENSE No. 44167 STATE OF FLORIDA PROFESSIONAL ENGINEER

FLORIDA BUILDING CODE (High Velocity Hurricane Zone)

©2012 TILTECO, INC.

TILTECO INC.
TILLIT TESTING & ENGINEERING COMPANY
8355 N.W. 36th, St. Ste. 305, VIRGINIA GARDENS, FL 33166
Phone : (305)871-1530 , Fax : (305)871-1531
e-mail: tilteco@aol.com
EB-0006719
WALTER A. TILLIT Jr. P.E.
FLORIDA Lic. # 44167

A-200-H SLAT ROLL-UP SHUTTER

ROLLAC SHUTTERS OF TEXAS, INC.
5331 ORANGE STREET
PEARLAND, TX. 77581
PHONE: (800) 880-0922, FAX: (281) 485-0839

REV. No	DESCRIPTION	DATE	REV. No	DESCRIPTION	DATE
1	OLD 09-125	02/17/12	3		
2			4		

DRAWN BY: L.G./A.G.
02/17/12 DATE
12-039 DRAWING No
SHEET 8 OF 13

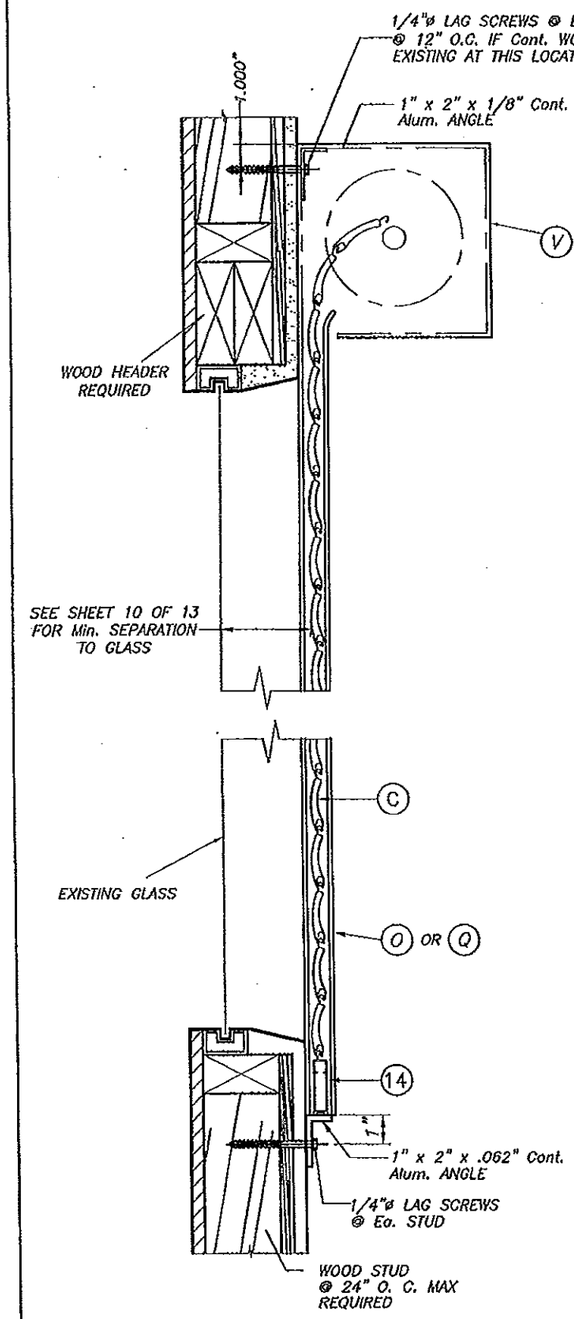

WALL MOUNTING INSTALLATION SINGLE SPAN CONDITION

N. T. S.

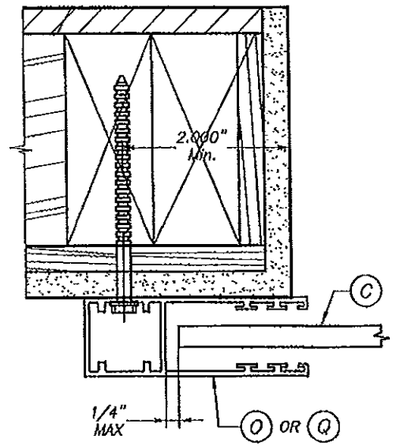

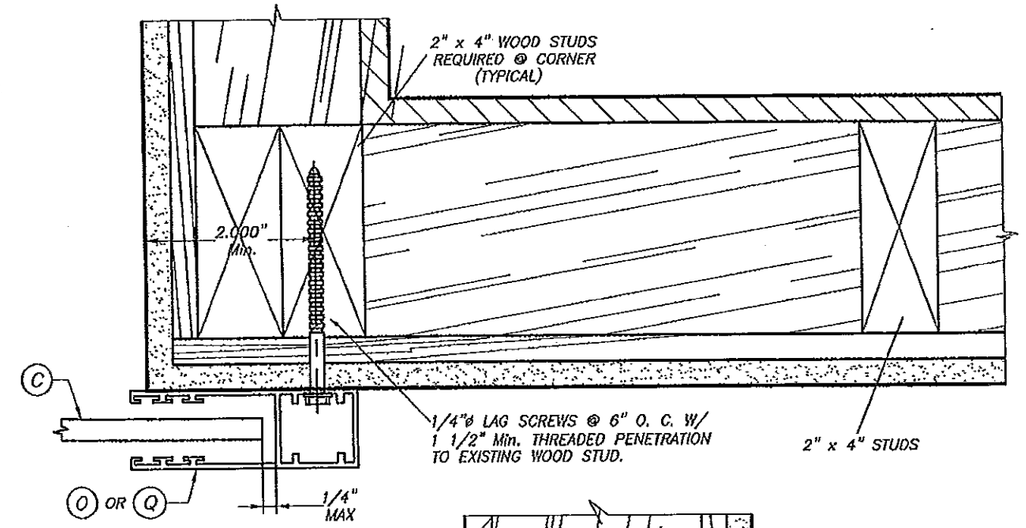

PLAN A (SECTION) WALL MOUNT

SCALE : 3/8" = 1"

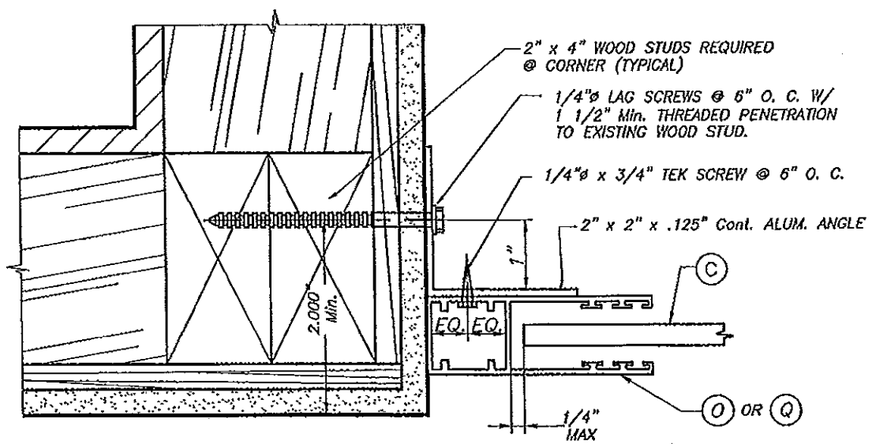

PLAN B (SECTION) INSIDE MOUNT

SCALE : 3/8" = 1"

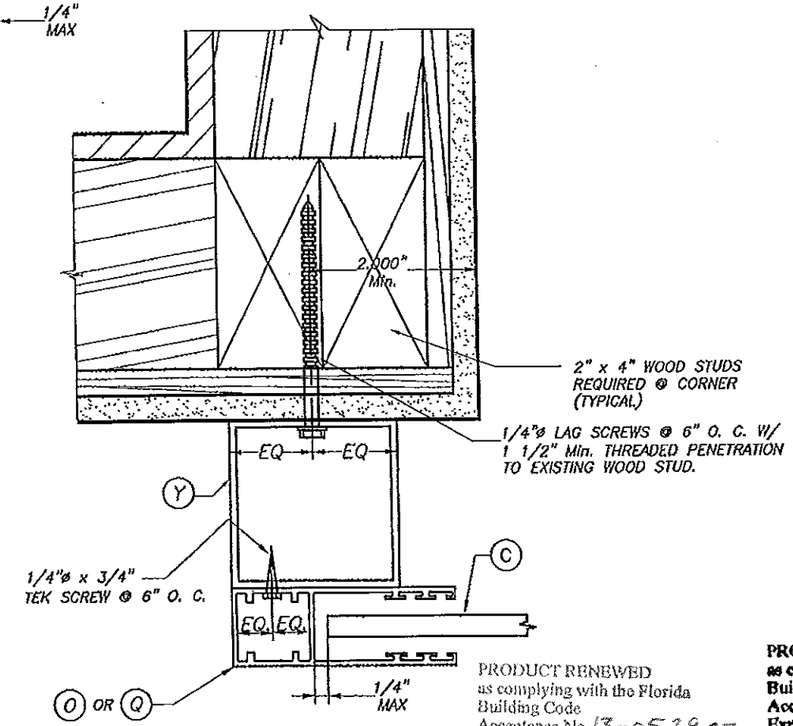

PLAN C (SECTION) BUILD-OUT

SCALE : 3/8" = 1"

PRODUCT RENEWED
as complying with the Florida Building Code
Acceptance No 13-0529.27
Expiration Date 05/26/2018
By
Miami Dade Product Control

PRODUCT REVISED
as complying with the Florida Building Code
Acceptance No 12-0315.15
Expiration Date 05/26/2013
By
Miami Dade Product Control

INSTALLATIONS INTO EXISTING WOOD BUILDINGS

NOTES:

1. INSTALLATIONS ARE ONLY VALID FOR BUILDINGS WITH A.S.D. DESIGN PRESSURE RATING UP TO 80.0 psf AND FOR SHUTTERS W/O STORM BARS, HEADERS AND MULLIONS.
2. FOR NEW FRAME CONSTRUCTION: WOOD MEMBER TO BE SOUTHERN PINE No. 2 W/ SPECIFIC DENSITY OF 0.55 OR EQUAL.

WALTER A. TILLIT JR. LICENSE No. 44167 STATE OF FLORIDA PROFESSIONAL ENGINEER

FLORIDA BUILDING CODE (High Velocity Hurricane Zone)

©2012 TILTECO, INC.

TILTECO INC.
TILLIT TESTING & ENGINEERING COMPANY
6355 N.W. 36th. St. Ste. 305, VIRGINIA GARDENS, FL 33166
Phone : (305)871-1530 . Fax : (305)871-1531
e-mail: tilteco@aol.com
EB-0008719
WALTER A. TILLIT Jr. P.E.
FLORIDA Lic. # 44167

A-200-H SLAT ROLL-UP SHUTTER

ROLLAC SHUTTERS OF TEXAS, INC.
5331 ORANGE STREET
PEARLAND, TX. 77581
PHONE: (800) 880-0922, FAX: (281) 485-0839

REV. No	DESCRIPTION	DATE	REV. No	DESCRIPTION	DATE
1	OLD 09-125	02/17/12	3		
2			4		

DRAWN BY: L.G./A.G.
02/17/12 DATE
12-039 DRAWING No
SHEET 9 OF 13

SLAT PERFORMANCE CHART
MAXIMUM NEGATIVE A.S.D. DESIGN PRESSURE RATING (p. s. f.) AND CORRESPONDING MAXIMUM SLAT SPAN "L" FOR TYPE 1 SLAT
(USE MAXIMUM VALUES BETWEEN POSITIVE AND NEGATIVE A.S.D. LOAD)

MAXIMUM A.S.D. DESIGN PRESSURE RATING (p.s.f.)	TYPE 1 SLAT A-200-H SLAT		
	MAXIMUM SLAT SPAN	MINIMUM SEPARATION TO GLASS	
	SINGLE & MULTIPLE UNIT	SINGLE & MULTIPLE UNIT	
		*	**
40.0	4'-7"	5 3/8"	3"
45.0	4'-7"	5 3/8"	3"
50.0	4'-5"	5 3/8"	3"
55.0	4'-3"	4 7/8"	3"
60.0	4'-1"	4 7/8"	3"
65.0	3'-11"	4 7/8"	3"
70.0.	3'-9"	4 7/8"	3"
75.0	3'-8"	4 7/8"	3"
80.0	3'-6"	4 7/8"	3"
85.0	3'-5"	4 7/8"	3"
90.0	3'-4"	4 7/8"	3"
95.0	3'-3"	4 7/8"	3"
100.0	3'-2"	4 7/8"	3"
105.0	3'-1"	4 7/8"	3"
110.0	3'-0"	3 3/8"	3"
115.0	2'-11"	3 3/8"	3"
120.0	2'-11"	3 3/8"	3"
125.0	2'-10"	3 3/8"	3"
130.0	2'-9"	3 3/8"	3"

TABLE 1: SEE NOTE BELOW.

SLAT SPAN (ft.)	MINIMUM SEPARATION TO GLASS
60" OR LESS	3"
> 60" TO 72"	3 3/16"

NOTE: MINIMUM SEPARATION TO GLASS FOR SINGLE AND MULTIPLE UNITS SHALL BE MEASURED FROM BACK OF SLAT TO GLASS.

– : NOT APPLICABLE

* MINIMUM SEPARATION TO GLASS FOR SHUTTERS INSTALLED WITHIN THE FIRST 30' ELEVATION OF BUILDING MEASURED AT BOTTOM OF SHUTTER AND MAXIMUM SPAN.
SEE TABLE 1 FOR MINIMUM SEPARATION TO GLASS FOR SPANS SHORTER THAN MAXIMUM ALLOWED.

** MINIMUM SEPARATION TO GLASS FOR SHUTTERS INSTALLED ABOVE 30' ELEVATION OF BUILDING MEASURED AT BOTTOM OF SHUTTER.

SIDE RAIL CONDITIONS FOR TYPE 1 SLAT

NOTE:
TYPE 1 SLAT SHALL ONLY BE USED IN CONJUNTION WITH TYPE 1, 2 & 3 SIDE RAILS.

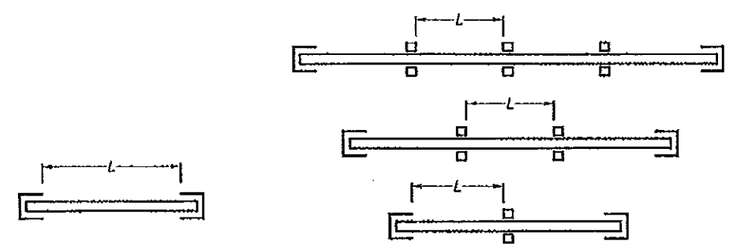

SINGLE SPAN

MULTIPLE SPAN

SPAN LAYOUT

PRODUCT RENEWED
as complying with the Florida
Building Code
Acceptance No 13-0529.27
Expiration Date 05/26/2018
By
Miami Dade Product Control

PRODUCT REVISED
as complying with the Florida
Building Code
Acceptance No 12-0315.15
Expiration Date 05/26/2013
By
Miami Dade Product Control

WALTER A. TILLIT JR.
LICENSE
No. 44167
STATE OF FLORIDA
PROFESSIONAL ENGINEER

FLORIDA BUILDING CODE (High Velocity Hurricane Zone)

©2012 TILTECO, INC.

TILTECO INC.
TILLIT TESTING & ENGINEERING COMPANY
6355 N.W. 36th, St, Ste. 305, VIRGINIA GARDENS, FL 33166
Phone : (305)871-1530 . Fax : (305)871-1531
e-mail: tilteco@aol.com
EB-0006719
WALTER A. TILLIT Jr. P.E.
FLORIDA Lic. # 44167

A-200-H SLAT ROLL-UP SHUTTER

ROLLAC SHUTTERS OF TEXAS, INC.
5331 ORANGE STREET
PEARLAND, TX. 77581
PHONE: (800) 880-0922, FAX: (281) 485-0839

REV. No	DESCRIPTION	DATE	REV. No	DESCRIPTION	DATE
1	OLD 09-125	02/17/12	3		
2			4		

DRAWN BY: L.G./A.G.
02/17/12 DATE
12-039 DRAWING No
SHEET 10 OF 13

STORM BAR LOADING CHART MAXIMUM A.S.D. DESIGN PRESSURE RATING (p. s. f.) AND CORRESPONDING MAXIMUM SPAN "L" FOR A GIVEN TYPE OF STORM BAR AND STORM BAR SPACING.

(USE MAXIMUM VALUES BETWEEN POSITIVE AND NEGATIVE A.S.D. LOAD)

MAXIMUM A.S.D. DESIGN PRESSURE RATING (p.s.f.)	(E) TYPE 1 STORM BAR 2" x 4" x 1/4"				(F) TYPE 2 STORM BAR 2" x 4" x 1/8"				(G) TYPE 3 STORM BAR 2" x 3" x 1/8"				(H) TYPE 4 STORM BAR RLL-15 + RLL-16			
	* STORM BAR SPACING				* STORM BAR SPACING				* STORM BAR SPACING				* STORM BAR SPACING			
	≤ 3'-0"	3' TO 4'	4' TO 5'	5' TO 6'	≤ 3'-0"	3' TO 4'	4' TO 5'	5' TO 6'	≤ 3'-0"	3' TO 4'	4' TO 5'	5' TO 6'	≤ 3'-0"	3' TO 4'	4' TO 5'	5' TO 6'
30.0 OR LESS	10'-0"	10'-0"	10'-0"	10'-0"	9'-0"	9'-0"	9'-0"	8'-11"	8'-0"	8'-0"	8'-0"	7'-3"	5'-6"	5'-6"	5'-2"	4'-8"
35.0	10'-0"	10'-0"	10'-0"	10'-0"	9'-0"	9'-0"	9'-0"	8'-3"	8'-0"	8'-0"	7'-5"	6'-9"	5'-6"	5'-4"	4'-9"	4'-4"
40.0	10'-0"	10'-0"	10'-0"	9'-11"	9'-0"	9'-0"	8'-6"	7'-9"	8'-0"	7'-9"	6'-11"	6'-4"	5'-6"	5'-0"	4'-5"	4'-1"
45.0	10'-0"	10'-0"	10'-0"	9'-8"	9'-0"	8'-11"	8'-0"	7'-4"	8'-0"	7'-3"	6'-6"	5'-11"	5'-5"	4'-8"	4'-2"	3'-10"
50.0	10'-0"	10'-0"	9'-10"	9'-3"	9'-0"	8'-6"	7'-7"	6'-11"	8'-0"	6'-11"	6'-2"	5'-8"	5'-2"	4'-5"	4'-0"	3'-8"
55.0	10'-0"	10'-0"	9'-7"	8'-10"	9'-0"	8'-1"	7'-3"	6'-7"	7'-7"	6'-7"	5'-11"	5'-5"	4'-11"	4'-3"	3'-9"	3'-6"
60.0	10'-0"	9'-11"	9'-3"	8'-5"	8'-11"	7'-9"	6'-11"	6'-4"	7'-3"	6'-4"	5'-8"	5'-2"	4'-8"	4'-1"	3'-8"	3'-4"
65.0	10'-0"	9'-9"	8'-11"	8'-1"	8'-7"	7'-5"	6'-8"	6'-1"	7'-0"	6'-1"	5'-5"	4'-11"	4'-6"	3'-11"	3'-6"	3'-2"
70.0	10'-0"	9'-7"	8'-7"	7'-10"	8'-3"	7'-2"	6'-5"	5'-10"	6'-9"	5'-10"	5'-3"	4'-9"	4'-4"	3'-9"	3'-4"	3'-1"
75.0	10'-0"	9'-3"	8'-3"	7'-7"	8'-0"	6'-11"	6'-2"	5'-8"	6'-6"	5'-8"	5'-1"	4'-7"	4'-2"	3'-8"	3'-3"	3'-0"
80.0	9'-11"	8'-11"	8'-0"	7'-4"	7'-9"	6'-9"	6'-0"	5'-6"	6'-4"	5'-6"	4'-11"	4'-6"	4'-1"	3'-6"	3'-2"	2'-10"
85.0	9'-10"	8'-8"	7'-9"	7'-1"	7'-6"	6'-6"	5'-10"	5'-4"	6'-1"	5'-4"	4'-9"	4'-4"	3'-11"	3'-5"	3'-1"	2'-9"
90.0	9'-8"	8'-5"	7'-7"	6'-11"	7'-4"	6'-4"	5'-8"	5'-2"	5'-11"	5'-2"	4'-7"	4'-2"	3'-10"	3'-4"	3'-0"	2'-8"
95.0	9'-6"	8'-3"	7'-4"	6'-8"	7'-1"	6'-2"	5'-6"	5'-0"	5'-9"	5'-0"	4'-6"	4'-1"	3'-9"	3'-3"	2'-11"	2'-8"
100.0	9'-3"	8'-0"	7'-2"	6'-6"	6'-11"	6'-0"	5'-4"	4'-11"	5'-8"	4'-11"	4'-4"	4'-0"	3'-8"	3'-2"	2'-10"	2'-7"
105.0	9'-0"	7'-10"	7'-0"	6'-5"	6'-9"	5'-10"	5'-3"	4'-9"	5'-6"	4'-9"	4'-3"	3'-11"	3'-6"	3'-1"	2'-9"	2'-6"
110.0	8'-10"	7'-8"	6'-10"	6'-3"	6'-7"	5'-9"	5'-1"	4'-8"	5'-5"	4'-8"	4'-2"	3'-10"	3'-6"	3'-0"	2'-8"	2'-5"
115.0	8'-7"	7'-6"	6'-8"	6'-1"	6'-6"	5'-7"	5'-0"	4'-7"	5'-3"	4'-7"	4'-1"	3'-9"	3'-5"	2'-11"	2'-7"	2'-5"
120.0	8'-5"	7'-4"	6'-6"	6'-0"	6'-4"	5'-6"	4'-11"	4'-6"	5'-2"	4'-6"	4'-0"	3'-8"	3'-4"	2'-10"	2'-7"	2'-4"
125.0	8'-3"	7'-2"	6'-5"	5'-10"	6'-2"	5'-4"	4'-10"	4'-5"	5'-1"	4'-4"	3'-11"	3'-7"	3'-3"	2'-10"	2'-6"	2'-4"
130.0	8'-1"	7'-0"	6'-3"	5'-9"	6'-1"	5'-3"	4'-9"	4'-4"	4'-11"	4'-3"	3'-10"	3'-6"	3'-2"	2'-9"	2'-6"	2'-3"

* STORM BAR SPACING SHALL BE SUCH THAT MAXIMUM SLAT SPAN SHALL NOT BE EXCEEDED.

PRODUCT RENEWED
as complying with the Florida
Building Code
Acceptance No 13-0529.27
Expiration Date 05/26/2018
By
Miami Dade Product Control

PRODUCT REVISED
as complying with the Florida
Building Code
Acceptance No 12-0315.15
Expiration Date 05/26/2013
By
Miami Dade Product Control

WALTER A. TILLIT JR. LICENSE No 44167 STATE OF FLORIDA PROFESSIONAL ENGINEER

FLORIDA BUILDING CODE (High Velocity Hurricane Zone)

©2012 TILTECO, INC.

TILTECO INC.
TILLIT TESTING & ENGINEERING COMPANY
6355 N.W. 36th. St. Ste. 305, VIRGINIA GARDENS, FL 33166
Phone : (305)871-1530 . Fax : (305)871-1531
e-mail: tilteco@aol.com
EB-0006719
WALTER A. TILLIT Jr. P.E.
FLORIDA Lic. # 44167

A-200-H SLAT ROLL-UP SHUTTER

ROLLAC SHUTTERS OF TEXAS, INC.
5331 ORANGE STREET
PEARLAND, TX. 77581
PHONE: (800) 880-0922, FAX: (281) 485-0839

REV. No	DESCRIPTION	DATE	REV. No	DESCRIPTION	DATE
1	OLD 09-125	02/17/12	3		
2			4		

DRAWN BY: L.G./A.G.
02/17/12 DATE
12-039 DRAWING No
SHEET 11 OF 13

HEADER LOADING CHART

MAXIMUM A.S.D. DESIGN PRESSURE RATING (p. s. f.) AND CORRESPONDING MAXIMUM SPAN "L" (Ft.) FOR A GIVEN TYPE OF HEADER AND STORM BAR HEIGHT (Ft.).

(USE MAXIMUM VALUES BETWEEN POSITIVE AND NEGATIVE A.S.D. LOAD)

MAXIMUM A.S.D. DESIGN PRESSURE RATING (p.s.f.)	(I) TYPE 1 HEADER 2" x 4" X 1/4"			(J) TYPE 2 HEADER 2" x 4" X 1/8"		(K) TYPE 3 HEADER 1" x 4" X 1/8"	
	STORM BAR HEIGHT			STORM BAR HEIGHT		STORM BAR HEIGHT	
	≤ 7'-0"	7' TO 9'	9' TO 10'	≤ 5'-0"	5' TO 8'	≤ 5'-0"	5' TO 7'
30.0 OR LESS	15'-1"	14'-0"	13'-2"	12'-0"	11'-2"	7'-1"	6'-6"
35.0	14'-9"	13'-0"	12'-4"	12'-0"	10'-4"	7'-1"	6'-6"
40.0	13'-9"	12'-2"	11'-6"	12'-0"	9'-8"	7'-1"	6'-6"
45.0	13'-0"	11'-5"	10'-10"	11'-6"	9'-1"	7'-1"	6'-4"
50.0	12'-4"	10'-10"	10'-4"	10'-11"	8'-8"	7'-1"	6'-0"
55.0	11'-9"	10'-4"	9'-10"	10'-5"	8'-3"	6'-10"	5'-9"
60.0	11'-3"	9'-11"	9'-5"	10'-0"	7'-11"	6'-6"	5'-6"
65.0	10'-10"	9'-6"	9'-0"	9'-7"	7'-7"	6'-3"	5'-4"
70.0	10'-5"	9'-2"	8'-8"	9'-3"	7'-4"	6'-0"	5'-1"
75.0	10'-1"	8'-10"	8'-5"	8'-11"	7'-1"	5'-10"	4'-11"
80.0	9'-9"	8'-7"	8'-2"	8'-8"	6'-10"	5'-8"	4'-9"
85.0	9'-5"	8'-4"	7'-11"	8'-5"	6'-7"	5'-6"	4'-8"
90.0	9'-2"	8'-1"	7'-8"	8'-2"	6'-5"	5'-4"	4'-6"
95.0	8'-11"	7'-11"	7'-6"	7'-11"	6'-3"	5'-2"	4'-5"
100.0	8'-8"	7'-8"	7'-3"	7'-9"	6'-1"	5'-1"	4'-3"
105.0	8'-6"	7'-6"	7'-1"	7'-6"	6'-0"	4'-11"	4'-2"
110.0	8'-4"	7'-4"	6'-11"	7'-4"	5'-10"	4'-10"	4'-1"
115.0	8'-1"	7'-2"	6'-9"	7'-2"	5'-8"	4'-9"	4'-0"
120.0	7'-11"	7'-0"	6'-8"	7'-1"	5'-7"	4'-7"	3'-11"
125.0	7'-9"	6'-10"	6'-6"	6'-11"	5'-6"	4'-6"	3'-10"
130.0	7'-8"	6'-9"	6'-5"	6'-9"	5'-4"	4'-5"	3'-9"

PRODUCT RENEWED
as complying with the Florida
Building Code
Acceptance No 13-0529.27
Expiration Date 05/26/2018
By
Miami Dade Product Control

PRODUCT REVISED
as complying with the Florida
Building Code
Acceptance No 12-0315.15
Expiration Date 05/26/2013
By
Miami Dade Product Control

WALTER A. TILLIT JR.
LICENSE
No. 44167
STATE OF FLORIDA
PROFESSIONAL ENGINEER

FLORIDA BUILDING CODE (High Velocity Hurricane Zone)

©2012 TILTECO, INC.

TILTECO INC.
TILLIT TESTING & ENGINEERING COMPANY
8355 N.W. 36th. St. Ste. 305, VIRGINIA GARDENS, FL 33166
Phone : (305)871-1530 . Fax : (305)871-1531
e-mail: tilteco@aol.com
EB-0006719
WALTER A. TILLIT Jr. P.E.
FLORIDA Lic. # 44167

A-200-H SLAT ROLL-UP SHUTTER

ROLLAC SHUTTERS OF TEXAS, INC.
5331 ORANGE STREET
PEARLAND, TX. 77581
PHONE: (800) 880-0922, FAX: (281) 485-0839

REV. No	DESCRIPTION	DATE	REV. No	DESCRIPTION	DATE
1	OLD 09-125	02/17/12	3		
2			4		

DRAWN BY: L.G./A.G.
02/17/12 DATE
12-039 DRAWING No
SHEET 12 OF 13

MULLION LOADING CHART
MAXIMUM A.S.D. DESIGN PRESSURE RATING (p. s. f.) AND CORRESPONDING MAXIMUM SPAN "L" (Ft.) FOR A GIVEN TYPE OF MULLION AND MULLION SPACING (Ft.).

(USE MAXIMUM VALUES BETWEEN POSITIVE AND NEGATIVE A.S.D. LOAD)

MAXIMUM A.S.D. DESIGN PRESSURE RATING (p.s.f.)	(L) TYPE 1 MULLION 4" x 6" x 3/16"			(M) TYPE 2 MULLION 3" x 4" x 1/8"			(N) TYPE 3 MULLION 2" x 3" x 1/8"		
	MULLION SPACING			MULLION SPACING			MULLION SPACING		
	≤ 4'-0"	4' TO 5'	5' TO 8'	≤ 4'-0"	4' TO 5'	5' TO 8'	≤ 3'-0"	3' TO 4'	4' TO 5'
30.0 OR LESS	12'-0"	12'-0"	12'-0"	9'-0"	9'-0"	8'-10"	7'-10"	7'-2"	6'-7"
35.0	12'-0"	12'-0"	12'-0"	9'-0"	9'-0"	8'-2"	7'-5"	6'-9"	6'-3"
40.0	12'-0"	12'-0"	12'-0"	8'-10"	9'-0"	7'-8"	7'-2"	6'-6"	6'-0"
45.0	12'-0"	12'-0"	12'-0"	8'-4"	9'-0"	7'-3"	6'-10"	6'-3"	5'-9"
50.0	12'-0"	12'-0"	12'-0"	7'-10"	8'-8"	6'-10"	6'-7"	6'-0"	5'-7"
55.0	12'-0"	12'-0"	11'-6"	7'-6"	8'-3"	6'-6"	6'-5"	5'-10"	5'-5"
60.0	12'-0"	12'-0"	11'-0"	7'-2"	7'-11"	6'-3"	6'-3"	5'-8"	5'-3"
65.0	12'-0"	12'-0"	10'-7"	6'-11"	7'-7"	6'-0"	6'-1"	5'-6"	5'-1"
70.0	11'-9"	12'-0"	10'-2"	6'-8"	7'-4"	5'-9"	5'-11"	5'-4"	5'-0"
75.0	11'-4"	12'-0"	9'-10"	6'-5"	7'-1"	5'-7"	5'-9"	5'-3"	4'-11"
80.0	11'-0"	12'-0"	9'-6"	6'-3"	6'-10"	5'-5"	5'-8"	5'-2"	4'-9"
85.0	10'-8"	11'-8"	9'-3"	6'-0"	6'-8"	5'-3"	5'-7"	5'-0"	4'-8"
90.0	10'-4"	11'-5"	9'-0"	5'-10"	6'-5"	5'-1"	5'-5"	4'-11"	4'-7"
95.0	10'-1"	11'-1"	8'-9"	5'-9"	6'-3"	5'-0"	5'-4"	4'-10"	4'-6"
100.0	9'-10"	10'-10"	8'-6"	5'-7"	6'-1"	4'-10"	5'-3"	4'-9"	4'-5"
105.0	9'-7"	10'-6"	8'-4"	5'-5"	6'-0"	4'-9"	5'-2"	4'-8"	4'-4"
110.0	9'-4"	10'-3"	8'-2"	5'-4"	5'-10"	4'-7"	5'-1"	4'-7"	4'-2"
115.0	9'-2"	10'-1"	7'-11"	5'-2"	5'-9"	4'-6"	5'-0"	4'-7"	4'-1"
120.0	8'-11"	9'-10"	7'-9"	5'-1"	5'-7"	4'-5"	4'-11"	4'-6"	4'-0"
125.0	8'-9"	9'-8"	7'-8"	5'-0"	5'-6"	4'-4"	4'-11"	4'-5"	3'-11"
130.0	8'-7"	9'-6"	7'-6"	4'-11"	5'-4"	4'-3"	4'-10"	4'-4"	3'-10"

NOTES : REFER TO ELEVATIONS ON SHEET 1A OF 13.

1-. FOR MULLIONS INSTALLED W/O STORM BARS

A) MULLION SPACING SHALL BE SUCH THAT MAXIMUM SLAT SPAN SHALL NOT BE EXCEEDED.

2-. FOR MULLIONS INSTALLED W/ STORM BARS & HEADERS

A) MULLION SPACING SHALL BE SUCH THAT MAXIMUM HEADER SPAN SHALL NOT BE EXCEEDED.

B) STORM BAR SPACING SHALL BE SUCH THAT MAXIMUM SLAT SPAN SHALL NOT BE EXCEEDED.

SIDE RAILS (O) & (Q) ANCHOR SPACING SCHEDULE: *

MAXIMUM A.S.D. DESIGN PRESSURE RATING (p.s.f.) FOR CONNECTION TO POURED CONCRETE OR CONCRETE BLOCK WALL SUBSTRATE

MAXIMUM A.S.D. DESIGN PRESSURE RATING (p.s.f.)	SUBSTRATE	SLAT TYPE 1 (C) (A-200-H)					
		(O) (RLL-25) SIDE RAIL			(Q) (RLL-1) SIDE RAIL		
		WALL MOUNT	INSIDE MOUNT	BUILD-OUT MOUNT	WALL MOUNT	INSIDE MOUNT	BUILD-OUT MOUNT
80 OR LESS	C. BLOCK	6"	6"	6"	6"	6"	6"
	CONCRETE	6"	6"	6"	6"	6"	6"
>80 TO 130	C. BLOCK	4 1/2"	5"	6"	5"	5"	6"
	CONCRETE	6"	6"	6"	6"	6"	6"

* MAXIMUM ANCHOR SPACING (in.) AT SIDE RAILS VERSUS EDGE DISTANCE = E.D.

MAXIMUM ANCHOR SPACING ARE VALID FOR 3" EDGE DISTANCE.

PRODUCT RENEWED
as complying with the Florida Building Code
Acceptance No 13-0529.27
Expiration Date 05/26/2018
By
Miami Dade Product Control

PRODUCT REVISED
as complying with the Florida Building Code
Acceptance No 12-0315.15
Expiration Date 05/26/2013
By
Miami Dade Product Control

WALTER A. TILLIT JR. LICENSE No. 44167 STATE OF FLORIDA PROFESSIONAL ENGINEER

FLORIDA BUILDING CODE (High Velocity Hurricane Zone)

©2012 TILTECO, INC.

TILTECO INC.
TILLIT TESTING & ENGINEERING COMPANY
6355 N.W. 36th St. Ste. 305, VIRGINIA GARDENS, FL 33166
Phone : (305)871-1530 - Fax : (305)871-1531
e-mail: tilteco@aol.com
EB-0006719
WALTER A. TILLIT Jr. P.E.
FLORIDA Lic. # 44167

A-200-H SLAT ROLL-UP SHUTTER

ROLLAC SHUTTERS OF TEXAS, INC.
5331 ORANGE STREET
PEARLAND, TX. 77581
PHONE: (800) 880-0922, FAX: (281) 485-0839

REV. No	DESCRIPTION	DATE	REV. No	DESCRIPTION	DATE
1	OLD 09-125	02/17/12	3		
2			4		

DRAWN BY: L.G./A.G.
02/17/12 DATE
12-039 DRAWING No
SHEET 13 OF 13