MIAMI-DADE COUNTY
DEPARTMENT OF REGULATORY AND ECONOMIC RESOURCES (RER)
BOARD AND CODE ADMINISTRATION DIVISION

MIAMI-DADE COUNTY
PRODUCT CONTROL SECTION
11805 SW 26 Street, Room 208
Miami, Florida 33175-2474
T (786) 315-2590 F (786) 315-2599
www.miamidade.gov/economy

NOTICE OF ACCEPTANCE (NOA)

Eastern Metal Supply, Inc.
4268 WestRoads Drive
West Palm Beach, Florida 33407

SCOPE:
This NOA is being issued under the applicable rules and regulations governing the use of construction materials. The documentation submitted has been reviewed and accepted by Miami-Dade County RER- Product Control Section to be used in Miami Dade County and other areas where allowed by the Authority Having Jurisdiction (AHJ).

This NOA shall not be valid after the expiration date stated below. The Miami-Dade County Product Control Section (In Miami Dade County) and/or the AHJ (in areas other than Miami Dade County) reserve the right to have this product or material tested for quality assurance purposes. If this product or material fails to perform in the accepted manner, the manufacturer will incur the expense of such testing and the AHJ may immediately revoke, modify, or suspend the use of such product or material within their jurisdiction. RER reserves the right to revoke this acceptance, if it is determined by Miami-Dade County Product Control Section that this product or material fails to meet the requirements of the applicable building code.

This product is approved as described herein, and has been designed to comply with the High Velocity Hurricane Zone of the Florida Building Code.

DESCRIPTION: Bertha Roll-Up Hurricane Wind Abatement System

APPROVAL DOCUMENT: Drawing No. 13-036, titled " Bertha Roll-Up Hurricane Abatement W/58mm ER & NER Slat ", sheets 1 through 27 0f 27, prepared by Tilteco, Inc., dated May 22, 2013, signed and sealed by Walter A. Tillit Jr., P.E., on May 23, 2013 bearing the Miami-Dade County Product Control Approval stamp with the Notice of Acceptance number and the approval date by the Miami-Dade County Product Control Section.

MISSILE IMPACT RATING: Large and Small Missile Impact Resistant

LABELING: Each unit shall bear a permanent label with the manufacturer's name or logo, city, state, the following statement: "Miami-Dade County Product Control Approved", and NOA number, per TAS-201, TAS-202, and TAS-203, unless otherwise noted herein.

RENEWAL of this NOA shall be considered after a renewal application has been filed and there has been no change in the applicable building code negatively affecting the performance of this product.

TERMINATION of this NOA will occur after the expiration date or if there has been a revision or change in the materials, use, and/or manufacture of the product or process. Misuse of this NOA as an endorsement of any product, for sales, advertising or any other purposes shall automatically terminate this NOA. Failure to comply with any section of this NOA shall be cause for termination and removal of NOA.

ADVERTISEMENT: The NOA number preceded by the words Miami-Dade County, Florida, and followed by the expiration date may be displayed in advertising literature. If any portion of the NOA is displayed, then it shall be done in its entirety.

INSPECTION: A copy of this entire NOA shall be provided to the user by the manufacturer or its distributors and shall be available for inspection at the job site at the request of the Building Official.

This NOA consists of this page 1, evidence submitted page E-1 as well as approval document mentioned above. The submitted documentation was reviewed by **Helmy A. Makar, P.E., M.S.**

MIAMI-DADE COUNTY APPROVED

10/31/2013

NOA No. 13-0530.11
Expiration Date: 10/31/2018
Approval Date: 10/31/2013

Eastern Metal Supply, Inc.

NOTICE OF ACCEPTANCE: EVIDENCE SUBMITTED

A. DRAWINGS:

1. *Drawing No. 13-036, titled " Bertha Roll-Up Hurricane Abatement W/58mm ER & NER Slat ", sheets 1 through 27 0f 27, prepared by Tilteco, Inc., dated May 22, 2013, signed and sealed by Walter A. Tillit Jr., P.E., on May 23, 2013 .*

B. TESTS

1. *See Association's generic approval under 13-0231.*

C. CALCULATIONS

1. *See Association's generic approval under 13-0231.*

D. QUALITY ASSURANCE

1. *By Miami-Dade County Department of Regulatory and Economic Resources (RER).*

E. MATERIAL CERTIFICATIONS

1. *See Association's generic approval under 13-0231.*

F. STATEMENTS

1. *Release letter issued by the American Shutter System Association, Inc., dated May 03, 2013, certifying this product to meet the criteria of product tested and approved, and allowing Eastern Metal Supply, Inc. to use the test results approved under Miami-Dade County Approval No. 13-0231, signed by Legny Rodriguez.*
2. *Acknowledgment letter by Eastern Metal Supply, Inc., dated May 06, 2013, signed by William Feeley.*
3. *Letter by Tilteco, Inc., dated May 17, 2013, certifying that the drawing (No. 13-036) prepared for Eastern Metal Supply, Inc., signed and sealed by Walter A. Tillit Jr., P.E., is engineering wise identical to American Shutter System Association generic drawing (No. 12-164).*

Helmy A. Makar, P.E., M.S.
Product Control Unit Supervisor
NOA No. 13-0530.11
Expiration Date: 10/31/2018
Approval Date: 10/31/2013

GENERAL NOTES:

1. BERTHA ROLL-UP HURRICANE ABATEMENT SHOWN ON THIS PRODUCT APPROVAL DOCUMENT (P.A.D.) HAS BEEN VERIFIED FOR COMPLIANCE IN ACCORDANCE WITH THE **2010** EDITION OF THE FLORIDA BUILDING CODE. THIS PRODUCT MAY BE INSTALLED AT HIGH VELOCITY HURRICANE ZONES.

   DESIGN WIND LOADS SHALL BE DETERMINED AS PER SECTION **1620** OF THE ABOVE MENTIONED CODE, USING ASCE 7-10 AND SHALL NOT EXCEED THE MAXIMUM (A.S.D.) DESIGN PRESSURE RATINGS INDICATED ON SHEETS 4, 6, 12 THRU 16, 18 THRU 21 & 24 THRU 27. IN ORDER TO VERIFY THE ABOVE CONDITION, ULTIMATE DESING WIND LOADS DETERMINED PER ASCE 7-10 SHALL BE FIRST REDUCED TO A.S.D. DESIGN WIND LOADS BY MULTIPLYING THEM BY 0.6 IN ORDER TO COMPARE THESE W/ MAX. (A.S.D.) DESING PRESSURE RATINGS INDICATED ON SHEETS 4, 6, 12 THRU 16, 18 THRU 21 & 24 THRU 27.

   IN ORDER TO VERIFY THAT COMPONENTS AND ANCHORS ON THIS P.A.D. AS TESTED, WERE NOT OVER STRESSED, A 33% INCREASE IN ALLOWABLE STRESS FOR WIND LOADS WAS NOT USED IN THEIR ANALISYS. FASTENERS SPACING TO WOOD HAS BEEN DETERMINED IN ACCORDANCE WITH N.D.S. 2005.

   BERTHA ROLL-UP HURRICANE ABATEMENT'S ADEQUACY FOR IMPACT AND FATIGUE RESITANCE HAS BEEN VERIFIED IN ACCORDANCE WITH SECTION **1626** OF THE ABOVE MENTIONED CODE AS PER:

   - FENESTRATION TESTING LAB REPORTS #2760, #4596, #4644 & #4760
   - AMERICAN TESTING LAB OF SOUTH FLORIDA REPORTS #0404.01-08, #0803.02-12, #0803.03-12, #0803.01-12, #0803.04-12

2. ALL ALUMINUM EXTRUSIONS SHALL BE ALUMINUM ASSOCIATION 6063-T6 ALLOY & TEMPER (UNLESS OTHERWISE NOTED).

3. ALL SELF DRILL SCREWS (EXCEPT COMPONENTS Ⓑ & ③) TO BE AISI 410 SERIES STAINLESS STEEL CORROSION RESISTANT STEEL AS PER DIN 50018 AND SHALL COMPLY W/ FLORIDA BUILDING CODE SECTION 2411.3.3.4 TEK SCREWS SHALL BE AS MANUFACTURED BY ITW BUILDEX . ALL SCREWS SHALL BE HEX HD HWH.

4. BOLTS TO BE ASTM A-307, GALVANIZED OR AISI 304 OR 316 SERIES STAINLESS STEEL WITH 36 ksi MINIMUM YIELD STRENGTH.

5. ANCHORS TO WALL FOR Ⓔ, Ⓕ, & Ⓖ SIDE RAILS SHALL BE AS FOLLOWS: SEE NOTE 9 FOR SUBSTRATE LIMITATIONS BASED ON PRODUCT SYSTEM.

END RETENTION SYSTEM

SUBSTRATES											
POURED CONCRETE						GROUTED CONCRETE BLOCK (ASTM C-90)				WOOD (G=0.55)	
ANCHOR TYPE & MANUFACTURER						ANCHOR TYPE & MANUFACTURER				ANCHOR TYPE & MANUFACTURER	
3/8" ø WEDGE BOLT/ POWER FASTENERS, INC.			5/16" ø ULTRACON/ ELCO CONST. PRODUCTS			3/8"ø KWIK HUS BOLT/ HILTI, INC.		5/16" ø ULTRACON/ ELCO CONST. PRODUCTS		5/16" ø ULTRACON/ ELCO CONST. PRODUCTS	
MIN. E.D.	MIN. EMBED.	MIN. f'c	MIN. E.D.	MIN. EMBED.	MIN. f'c	MIN. E.D.	MIN. EMBED.	MIN. E.D.	MIN. EMBED.	MIN. E.D.	MIN. EMBED.
4 1/2"	3 1/2"	3 ksi	3 1/8"	2"	3.5 ksi	4"	3 1/4"	2 1/2"	2 1/4"	3 1/8"	2"

NON END RETENTION SYSTEM

SUBSTRATES													
POURED CONCRETE						GROUTED CONCRETE BLOCK (ASTM C-90)				WOOD (G=0.55)			
ANCHOR TYPE & MANUFACTURER						ANCHOR TYPE & MANUFACTURER				ANCHOR TYPE & MANUFACTURER			
1/4"ø MAXI-SET TAPCONS/ITW/BUILDEX			1/4" ø ULTRACON/ ELCO CONST. PRODUCTS			1/4"ø MAXI-SET TAPCONS/ITW/BUILDEX		1/4" ø ULTRACON/ ELCO CONST. PRODUCTS		1/4"ø MAXI-SET TAPCONS/ITW/BUILDEX		1/4" ø ULTRACON/ ELCO CONST. PRODUCTS	
MIN. E.D.	MIN. EMBED.	MIN. f'c	MIN. E.D.	MIN. EMBED.	MIN. f'c	MIN. E.D.	MIN. EMBED.	MIN. E.D.	MIN. EMBED.	MIN. E.D.	MIN. EMBED.	MIN. E.D.	MIN. EMBED.
2 1/2"	2 1/4"	3.19 ksi	2 1/2"	2 1/4"	2.73 ksi	2 1/2"	2 1/4"	2 1/2"	2 1/4"	1"	2 1/4"	1"	2 1/4"

NOTES: FOR END RETENTION AND NON END RETENTION SYSTEMS

(1) NO EMBEDMENT INTO FINISH MATERIAL SHALL BE CONSIDERED AS PART OF THE REQUIRED EMBEDMENT.
(2) EDGE DISTANCE IS BEYOND ANY FINISH MATERIAL.
(3) ANCHORS SHALL BE INSTALLED FOLOWING ALL OF THE RECOMENDATIONS AND SPECIFICATIONS OF THE ANCHOR'S MANUFACTURER.

6. ANCHORS REQUIRED FOR STORM BARS CONNECTIONS SHALL BE AS INDICATED ON SHEETS 19 THRU 22.

7. ANCHORS REQUIRED FOR MULLION CONNECTIONS AND HEADERS SHALL BE AS SPECIFIED ON APPLICABLE SECTIONS SHOWN ON SHEETS 7 THRU 10 AND 23 RESPECTIVELY.

   -KWIK BOLT TZ EXPANSION ANCHOR MANUFACTURED BY HILTI, INC.
   -KWIK HUS-H SCREW ANCHOR MANUFACTURED BY HILTI, INC.
   -WEDGE-BOLT ANCHOR MANUFACTURED BY POWER FASTENERS, INC.

   MINIMUM EDGE DISTANCE AND SPACING FOR ABOVE MENTIONED ANCHORS SHALL BE AS INDICATED BELOW OR AT ABOVE MENTIONED SHEETS. EDGE DISTANCE AND EMBEDMENTS ARE BEYOND ANY FINISH MATERIAL.

ANCHOR	SPACING @ 100%	EDGE DISTANCE @ 100%	EMBEDMENT @ 100%	
			CONCRETE	CONCRETE BLOCK
3/4"ø KWIK BOLT TZ	27"	9"	4 3/4" (3000 psi)	NOT ALLOWED
1/2"ø KWIK BOLT TZ	22 1/2"	7 1/2"	3 1/4" (3000 psi)	NOT ALLOWED
3/8"ø KWIK BOLT TZ	6"	4 3/8"	2" (3000 psi)	NOT ALLOWED
3/8"ø KWIK HUS-H SCREW	4"	5"	2" (3000 psi)	NOT ALLOWED
3/8"ø WEDGE-BOLT	4 1/2"	4 1/2"	2 1/2" (3000 psi)	NOT ALLOWED
1/2"ø KWIK HUS-H SCREW OR WEDGE BOLT	6"	6"	3" (3000 psi)	NOT ALLOWED
5/8"ø KWIK HUS-H SCREW	7 1/2"	7 1/2"	2 1/2" (3000 psi)	NOT ALLOWED

8. THE INSTALLATION CONTRACTOR IS TO SEAL/CAULK ALL PRODUCT COMPONENT EDGES WHICH REMAIN IN CONTINUOUS CONTACT WITH THE BUILDING TO PREVENT WIND/RAIN INTRUSION. CAULK AND SEAL PRODUCT TRACKS ALL AROUND FULL LENGTH.

9. IT SHALL BE THE RESPONSIBILITY OF THE CONTRACTOR TO VERIFY THE SOUNDNESS OF THE STRUCTURE WHERE PRODUCT IS TO BE ATTACHED TO INSURE PROPER ANCHORAGE. THIS PRODUCT SHALL ONLY BE ATTACHED TO CONCRETE, GROUT FILLED CELL CONCRETE BLOCK OR WOOD FRAME BUILDINGS. SEE SHEETS 5 THRU 10 & 18 THRU 23 FOR LIMITATIONS FOR SUBSTRATE INSTALLATIONS.

10. PRODUCTS INSTALLATION SHALL COMPLY WITH SPECS INDICATED IN THIS DRAWING PLUS ANY BUILDING AND ZONING REGULATIONS PROVIDED BY THE JURISDICTION WHERE PERMIT IS APPLIED TO.

11. PRODUCT MECHANISM NOT PART OF THIS APPROVAL.

12. (a) THIS P.A.D. PREPARED BY THIS ENGINEER IS GENERIC AND DOES NOT PROVIDE INFORMATION FOR A SITE SPECIFIC PROJECT; i.e. WHERE THE SITE CONDITIONS DEVIATE FROM THE P.A.D.

    (b) CONTRACTOR TO BE RESPONSIBLE FOR THE SELECTION, PURCHASE AND INSTALLATION INCLUDING LIFE SAFETY OF THIS PRODUCT, BASED ON THIS P.A.D. PROVIDED HE/SHE DOES NOT DEVIATE FROM THE CONDITIONS DETAILED ON THIS DOCUMENT. CONSTRUCTION SAFETY AT SITE IS THE CONTRACTOR'S RESPONSIBILITY.

    (c) THIS P.A.D. WILL BE CONSIDERED INVALID IF ALTERED BY ANY MEANS.

    (d) SITE SPECIFIC PROJECTS SHALL BE PREPARED BY A REGISTERED ENGINEER OR ARCHITECT WHICH WILL BECOME THE ENGINEER OF RECORD (E.O.R.) FOR THE PROJECT AND WHO WILL BE RESPONSIBLE FOR THE PROPER USE OF THE P.A.D. ENGINEER OF RECORD, ACTING AS A DELEGATED ENGINEER TO THE P.A.D. ENGINEER, SHALL SUBMIT TO THIS LATTER THE SITE SPECIFIC DRAWINGS FOR REVIEW.

    (e) THIS P.A.D. SHALL BEAR THE DATE AND ORIGINAL SEAL AND SIGNATURE OF THE PROFESSIONAL ENGINEER OF RECORD THAT PREPARED IT.

13. PERMANENT SHUTTER MANUFACTURER'S LABEL SHALL BE PLACED ON THE EXPOSED SURFACE OF THE SIDE RAIL APPROXIMATELY 4" BELOW THE TOP OF SUCH RAIL, LABEL SHALL READ AS FOLLOWS:
    EASTERN METAL SUPPLY, INC.
    WEST PALM BEACH, FLORIDA.
    MIAMI-DADE COUNTY PRODUCT CONTROL APPROVED.

Approved as complying with the Florida Building Code
Date 10/31/2013
NOA# 13-0530.11
Miami Dade Product Control
By

FLORIDA BUILDING CODE (High Velocity Hurricane Zone)

WALTER A. TILLIT JR. LICENSE No. 44167 STATE OF FLORIDA PROFESSIONAL ENGINEER
P.E. SEAL/SIGNATURE/DATE

© 2013 TILTECO INC.

TILTECO INC.
TILLIT TESTING & ENGINEERING COMPANY
6355 N.W. 36th. St., Ste. 303 - VIRGINIA GARDENS, FL 33166
Phone : (305) 871-1530 , Fax : (305) 871-1531
e-mail: tilteco@aol.com
EB-0006719
WALTER A. TILLIT Jr., P.E.
FLORIDA Lic. # 44167

BERTHA ROLL-UP HURRICANE ABATEMENT W/ 58mm ER & NER SLAT

EASTERN METAL SUPPLY, INC.
(ASSA # 1)
4268 WESTROADS DRIVE
WEST PALM BEACH, FL 33407
PH (800) 432-2204 FAX (561) 841-4592

REV. No	DESCRIPTION	DATE	REV. No	DESCRIPTION	DATE
1			3		
2			4		

A.G.
DRAWN BY:

05/22/13
DATE

13-036
DRAWING No

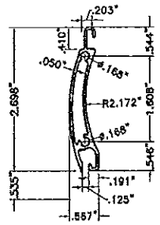

(A) SLAT
58mm EXTRUDED ALUMINUM SOLID SLAT
6063-T6 ALUMINUM ALLOY
Fy = 28.5 ksi (AVE.)
Ftu = 30.8 ksi (AVE.)

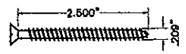

(B) END RETENTION SCREW
#10-12 x 2 1/2" AISI 1022 CARBON STEEL S.M.S. W/ DACROSHIELD COATING
Ftu = 200 ksi

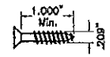

(B1) NON-RETENTION SCREW
#10 x 1" Min. 318 F.H. S.S. S.M.S. W/ DACROSHIELD COATING
Ftu = 200 ksi

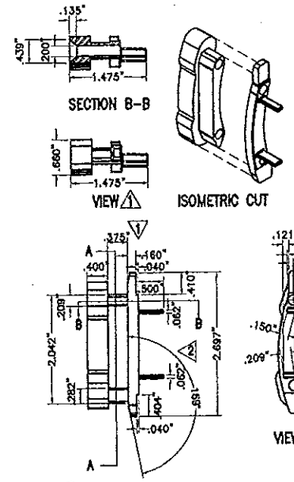

(C) SLAT LOCK GUIDE @ EVERY OTHER SLAT
FOR END RETENTION SYSTEM
CELCON ACETAL COPOLYMER

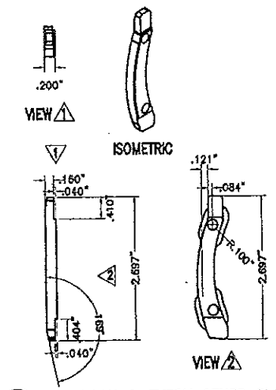

(C1) SLAT LOCK @ EVERY OTHER SLAT
FOR NON END RETENTION SYSTEM
CELCON ACETAL COPOLYMER

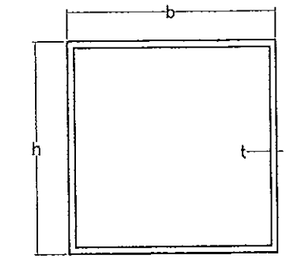

(D) BUILD-OUT MOUNTED TUBE
FOR END RETENTION & NON END RETENTION SYSTEMS
6063-T6 ALUMINUM ALLOY

B.O TUBE	b	h	t
(D1)	4"	2"	0.25"
(D2)	4"	3"	0.125"
(D3)	4"	4"	0.125"

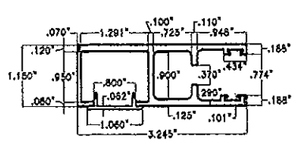

(E) SIDE RAIL
FOR END RETENTION SYSTEM
EXTRUDED ALUMINUM TRACK FOR SLAT
(6063-T6 ALUMINUM ALLOY)

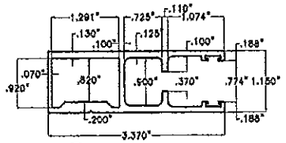

(F) SIDE RAIL
FOR END RETENTION SYSTEM
EXTRUDED ALUMINUM TRACK FOR SLAT
(6063-T6 ALUMINUM ALLOY)

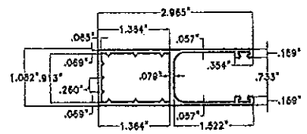

(G) SIDE RAIL
FOR NON END RETENTION SYSTEM
EXTRUDED ALUMINUM TRACK FOR SLAT
6063-T6 ALUMINUM ALLOY

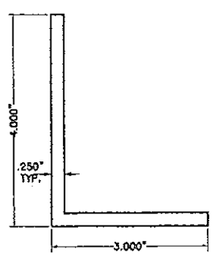

(H) 4"x3"x1/4" ANGLE
FOR END RETENTION SYSTEM
6063-T6 ALUMINUM ALLOY

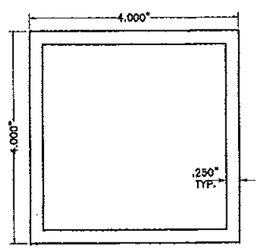

(I) INSIDE MOUNT TUBE
FOR END RETENTION SYSTEM
6063-T6 ALUMINUM ALLOY

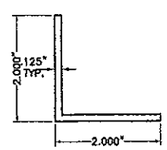

(J) 2"x2"x1/8" ANGLE
FOR END RETENTION & NON END RETENTION SYSTEMS
6063-T6 ALUMINUM ALLOY

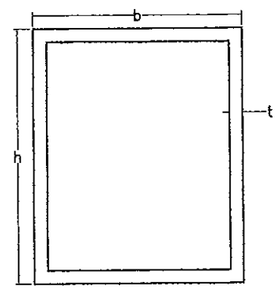

MULLIONS
FOR END RETENTION & NON END RETENTION SYSTEMS
6063-T6 ALUMINUM ALLOY

MULLIONS	b	h	t
(K) NER	3"	4"	0.125"
(L) NER	4"	4"	0.25"
(M) NER ER	4"	6"	0.25"
(N) ER	4"	8"	0.25"
ER: END RETENTION SYSTEM			
NER: NON END RETENTION SYSTEM			

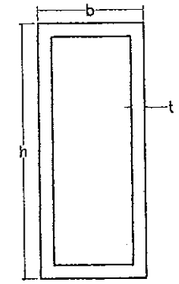

STORM BARS
FOR NON END RETENTION SYSTEM
6063-T6 ALUMINUM ALLOY

STORMBARS	b	h	t
(O)	2"	2"	0.25"
(P)	2"	3"	0.125"
(Q)	2"	4"	0.125"
(R)	2"	4"	0.25"

Approved as complying with the Florida Building Code
Date 10/31/2013
NOA# 13-0532.11
Miami Dade Product Control
By

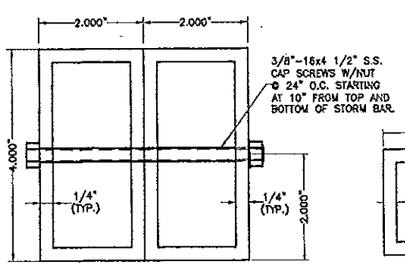

(2R) TYPE 5 STORM BAR
FOR NON END RETENTION SYSTEM
4" HEAVY EXTRUDED STORM BAR
6063-T6 ALUMINUM ALLOY

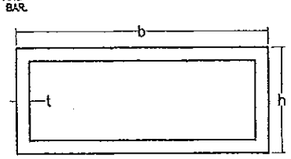

HEADERS
FOR NON END RETENTION SYSTEM
6063-T6 ALUMINUM ALLOY

HEADERS	b	h	t
(S)	3"	2"	0.125"
(T)	4"	2"	0.125"
(U)	4"	2"	0.25"
(V)	6"	2"	0.125"

COMPONENTS

SCALE: 3/8" = 1"

WALTER A. TILLIT JR. LICENSE No. 44167 STATE OF FLORIDA PROFESSIONAL ENGINEER
5/28/13
P.E. SEAL/SIGNATURE/DATE

© 2013 TILTECO INC.

TILTECO INC.
TILLIT TESTING & ENGINEERING COMPANY
5355 N.W. 36th. St., Ste. 305 – VIRGINIA GARDENS, FL 33166
Phone : (305) 871-1530 , Fax : (305) 871-1531
e-mail: tilteco@aol.com
EB-0006719
WALTER A. TILLIT Jr., P.E.
FLORIDA Lic. # 44167

FLORIDA BUILDING CODE (High Velocity Hurricane Zone)

BERTHA ROLL-UP HURRICANE ABATEMENT W/ 58mm ER & NER SLAT

EASTERN METAL SUPPLY, INC.
(ASSA # 1)
4268 WESTROADS DRIVE
WEST PALM BEACH, FL 33407
PH (800) 432-2204 FAX (561) 841-4592

REV. No	DESCRIPTION	DATE	REV. No	DESCRIPTION	DATE
1	(E), (F)	10/30/13	3		
2			4		

A.G.
DRAWN BY:

05/22/13
DATE

13-036
DRAWING No

SHEET 2 OF 27

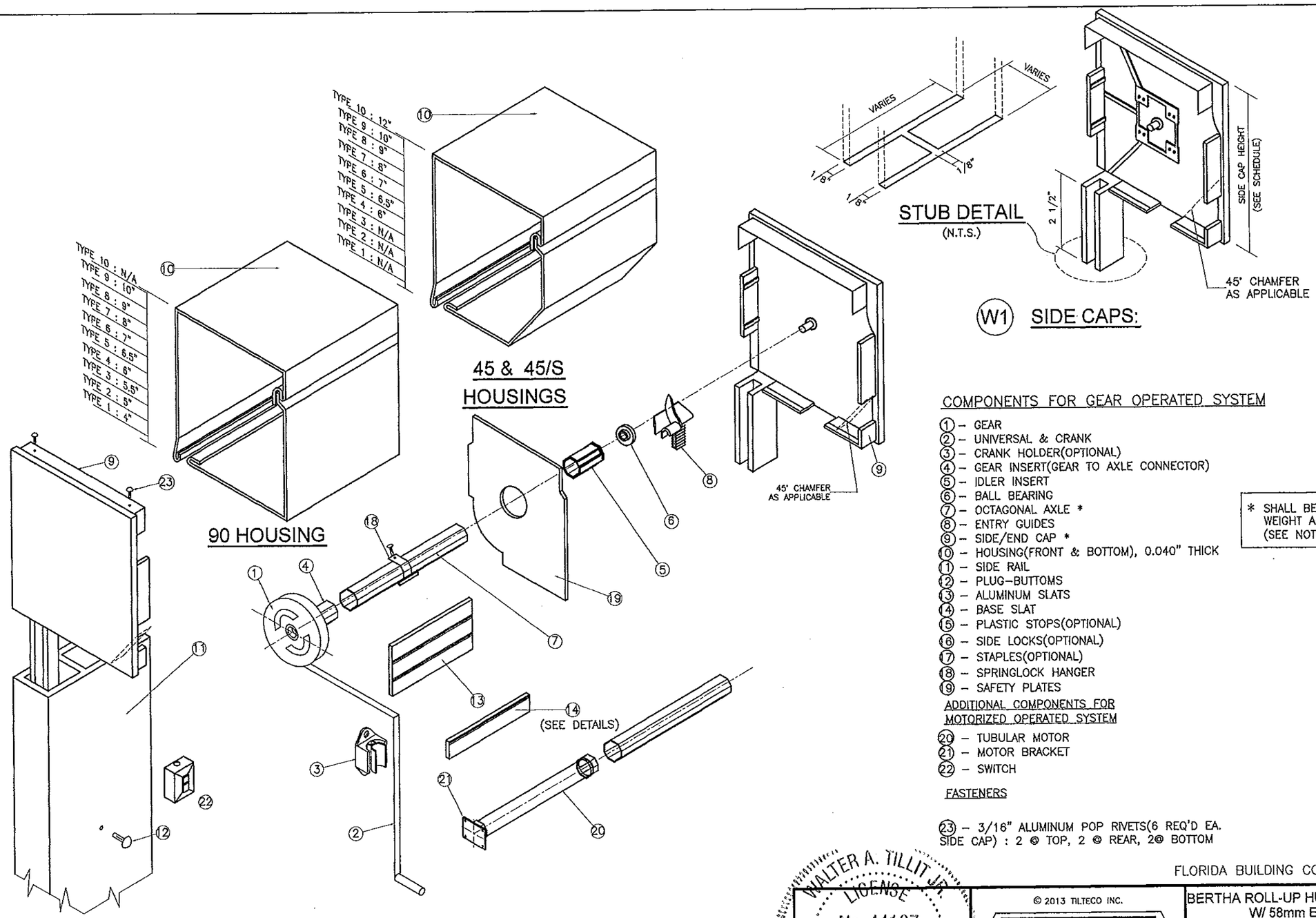

STUB DETAIL
(N.T.S.)

W1 SIDE CAPS:

COMPONENTS FOR GEAR OPERATED SYSTEM

1 – GEAR
2 – UNIVERSAL & CRANK
3 – CRANK HOLDER(OPTIONAL)
4 – GEAR INSERT(GEAR TO AXLE CONNECTOR)
5 – IDLER INSERT
6 – BALL BEARING
7 – OCTAGONAL AXLE *
8 – ENTRY GUIDES
9 – SIDE/END CAP *
10 – HOUSING(FRONT & BOTTOM), 0.040" THICK
11 – SIDE RAIL
12 – PLUG–BUTTOMS
13 – ALUMINUM SLATS
14 – BASE SLAT
15 – PLASTIC STOPS(OPTIONAL)
16 – SIDE LOCKS(OPTIONAL)
17 – STAPLES(OPTIONAL)
18 – SPRINGLOCK HANGER
19 – SAFETY PLATES

ADDITIONAL COMPONENTS FOR MOTORIZED OPERATED SYSTEM

20 – TUBULAR MOTOR
21 – MOTOR BRACKET
22 – SWITCH

FASTENERS

23 – 3/16" ALUMINUM POP RIVETS(6 REQ'D EA. SIDE CAP) : 2 @ TOP, 2 @ REAR, 2@ BOTTOM

* SHALL BE CAPABLE TO SUSTAIN SLAT'S WEIGHT AND ASSURE LIFTING MECHANISM (SEE NOTE 11/1)

Approved as complying with the Florida Building Code
Date 10/31/2013
NOA# 13-0530.11
Miami Dade Product Control
By

W BOX COMPONENTS AND ASSEMBLY DETAIL
END CAP SYSTEM
(SEE NOTE 11 ON SHEET 1)

FLORIDA BUILDING CODE (High Velocity Hurricane Zone)

WALTER A. TILLIT JR. LICENSE No. 44167 STATE OF FLORIDA PROFESSIONAL ENGINEER
P.E. SEAL/SIGNATURE/DATE

© 2013 TILTECO INC.

TILTECO INC.
TILLIT TESTING & ENGINEERING COMPANY
8355 N.W. 36th. St., Ste. 305 – VIRGINIA GARDENS, FL 33166
Phone : (305) 871-1530 , Fax : (305) 871-1531
e-mail: tilteco@aol.com
EB-0006719
WALTER A. TILLIT Jr., P.E.
FLORIDA Lic. # 44167

BERTHA ROLL-UP HURRICANE ABATEMENT
W/ 58mm ER & NER SLAT

EASTERN METAL SUPPLY, INC.
(ASSA # 1)
4268 WESTROADS DRIVE
WEST PALM BEACH, FL 33407
PH (800) 432-2204 FAX (561) 841-4592

REV. No	DESCRIPTION	DATE	REV. No	DESCRIPTION	DATE
1			3		
2			4		

A.G.
DRAWN BY:

05/22/13
DATE

13-036
DRAWING No

SHEET 3 OF 27

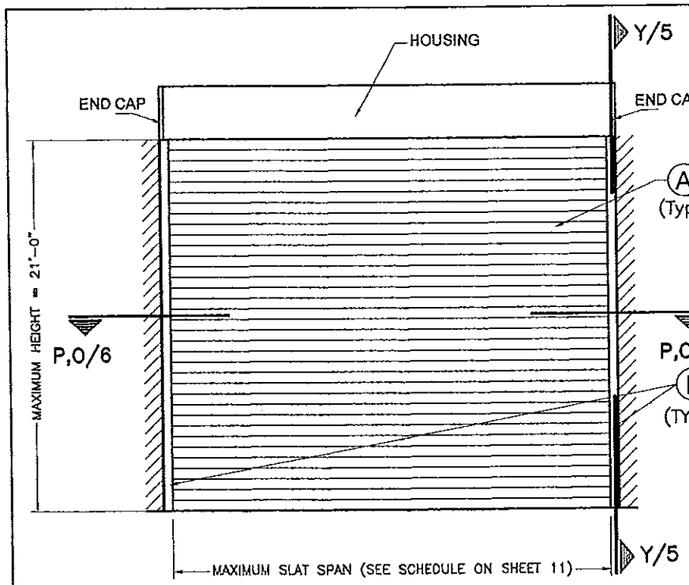

TYPICAL SINGLE UNIT ELEVATION W/O MULLIONS

NOTE: SEE SHEET 2 & 3 FOR COMPONENTS NOMENCLATURE.

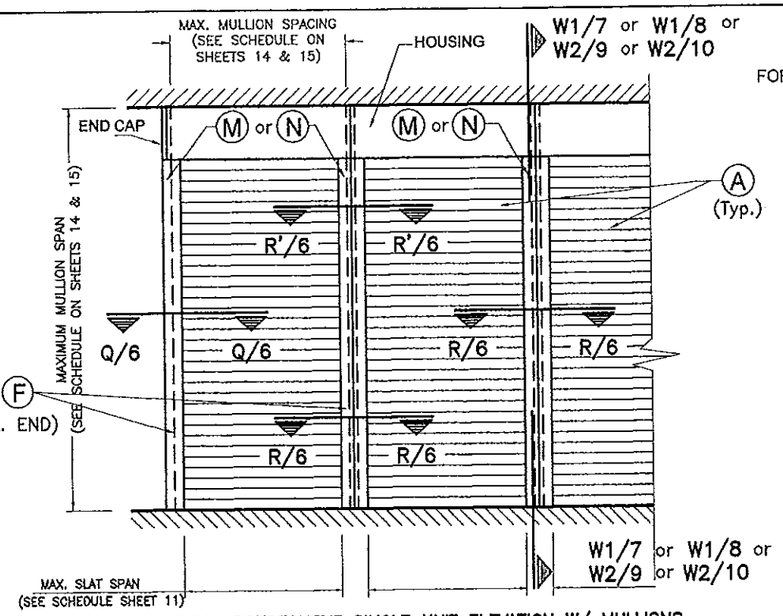

TYPICAL CONSECUTIVE SINGLE UNIT ELEVATION W/ MULLIONS

NOTE: SEE SHEET 2 & 3 FOR COMPONENTS NOMENCLATURE.

SLAT PERFORMANCE CHART IN WOOD

FOR A GIVEN MAXIMUM DESIGN PRESSURE RATING (p.s.f) AND PRODUCT MOUNT CONDITION FOR INSTALLATIONS W/O STORM BARS PER DETAIL 1 BELOW

5/16"Ø ULTRACON ANCHOR			
DESIGN LOAD (p.s.f.)	MAX. SLAT SPAN "LMAX." (ft)		REQUIRED MIN. SEPARATION TO GLASS MESURED TO BACK OF SLAT (in)
	WALL MOUNT	BUILD-OUT MOUNT W/ D1	
+45,-60	4'-0"	4'-0"	3 1/2"
+45,-60	6'-0"	6'-0"	5"
+45,-60	12'-0"	12'-0"	7 7/8"

NOTES:

1- WOOD FRAME WALL TO BE BUILT STRICTLY IN ACCORDANCE WITH SPECS GIVEN ON DETAIL AND PROVISIONS FROM CHAPTER 23 OF THE FLORIDA BUILDING CODE. MINIMUM LENGTH OF WALL AT EITHER SIDE OF OPENING SHALL BE 33".

2- VALID FOR SOUTHERN PINE #2 (G=0.55)

END RETENTION SYSTEM

Vx FORCES (Lb/FT) & Vy FORCES (Lb/FT) ACTING AT JAMBS FOR A DESIGN LOAD RANGE, SLAT SPAN RANGE FOR POURED CONCRETE OR GROUTED CONCRETE BLOCK WALL BUILDINGS *

(USE MAXIMUM VALUE BETWEEN POSITIVE AND NEGATIVE LOAD)

DESIGN LOAD RANGE (p.s.f.)	SLAT SPAN RANGE																	
	0'-4'		> 4'-5'		> 5'-6'		> 6'-7'		> 7'-9'		> 9'-12'		> 12'-16'		> 16'-20'		> 20'-23'	
	Vx	Vy	Vx	Vy	Vx	Vy	Vx	Vy	Vx	Vy	Vx	Vy	Vx	Vy	Vx	Vy	Vx	Vy
≤ 30.0	0	60	0	75	0	90	222	105	415	135	844	180	1348	240	2010	300	2183	342
>30-40	0	80	0	100	0	120	428	140	627	180	1144	240	1774	320	2515	400	2829	457
>40-60	0	120	0	150	150	180	496	210	1035	270	1722	300	2588	480	2964	533	2831	473
>60-80	0	160	0	200	398	240	788	280	1428	360	2278	480	2960	580	2976	547	–	–
>80-105	0	210	28	263	694	315	1141	368	1905	473	2083	499	2083	499	–	–	–	–
>105-120	0	240	58	300	867	360	1348	420	2184	540	2283	555	–	–	–	–	–	–
>120-140	0	280	98	350	1094	420	1619	490	2325	595	2325	595	–	–	–	–	–	–

*NOTE:
IT SHALL BE THE RESPONSIBILITY OF THE CONTRACTOR OR PERMIT HOLDER TO VERIFY THAT EXISTING STRUCTURE IS DESIGNED TO SUPPORT Vx AND Vy FORCES IN POUNDS PER UNIT FOOT OF PRODUCT HEIGHT AT BOTH JAMBS. SEE THIS SHEET FOR Vx & Vy VALUES.

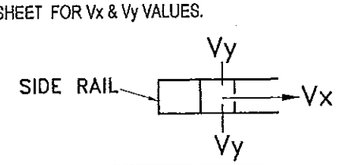

Approved as complying with the Florida Building Code
Date 10/31/2013
NOA# 13-0530.11
Miami Dade Product Control
By

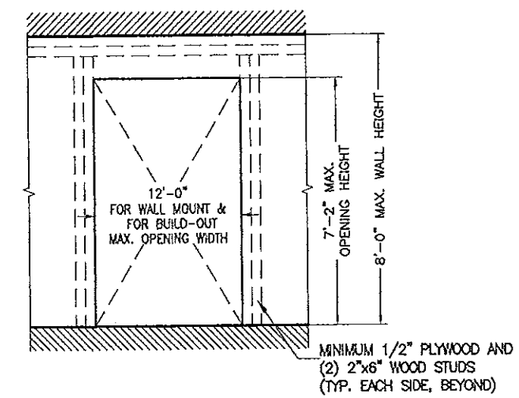

DETAIL 1 (ELEVATION)

INSTALLATION INTO WOOD FRAME STRUCTURES

FLORIDA BUILDING CODE (High Velocity Hurricane Zone)

WALTER A. TILLIT JR. LICENSE No. 44167 STATE OF FLORIDA PROFESSIONAL ENGINEER
P.E. SEAL/SIGNATURE/DATE

© 2013 TILTECO INC.

TILTECO INC.
TILLIT TESTING & ENGINEERING COMPANY
8355 N.W. 36th. St., Ste. 305 - VIRGINIA GARDENS, FL 33166
Phone : (305) 871-1530 , Fax : (305) 871-1531
e-mail: tilteco@aol.com
EB-0008719
WALTER A. TILLIT Jr., P.E.
FLORIDA Lic. # 44167

BERTHA ROLL-UP HURRICANE ABATEMENT W/ 58mm ER & NER SLAT

EASTERN METAL SUPPLY, INC.
(ASSA # 1)
4268 WESTROADS DRIVE
WEST PALM BEACH, FL 33407
PH (800) 432-2204 FAX (561) 841-4592

REV. No	DESCRIPTION	DATE	REV. No	DESCRIPTION	DATE
1			3		
2			4		

A.G.
DRAWN BY:

05/22/13
DATE

13-036
DRAWING No

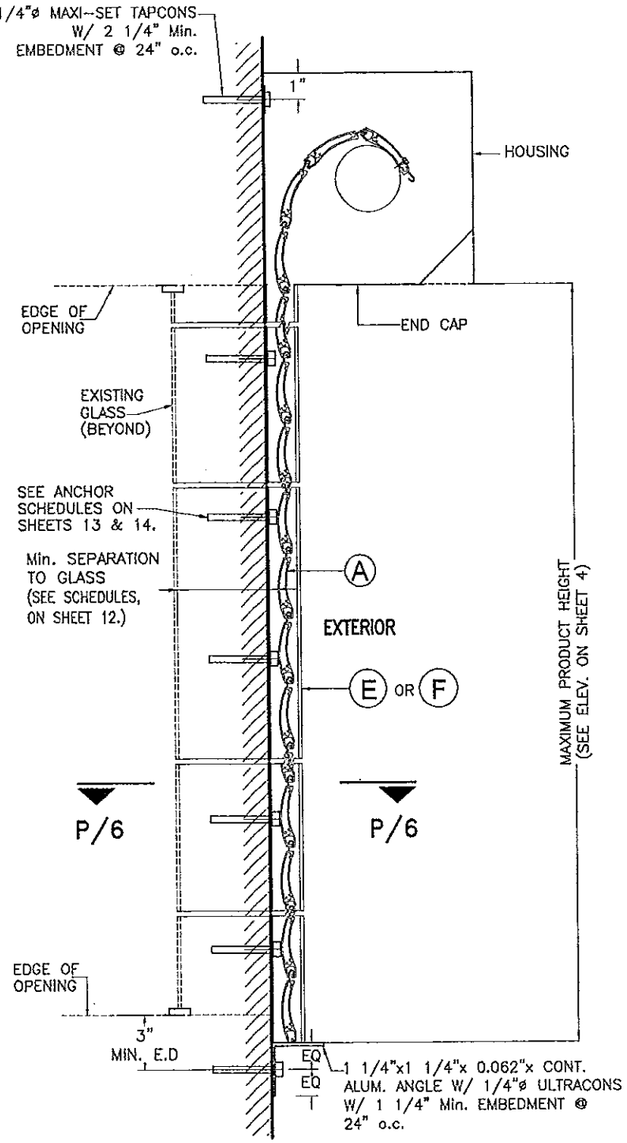

WALL MOUNTING

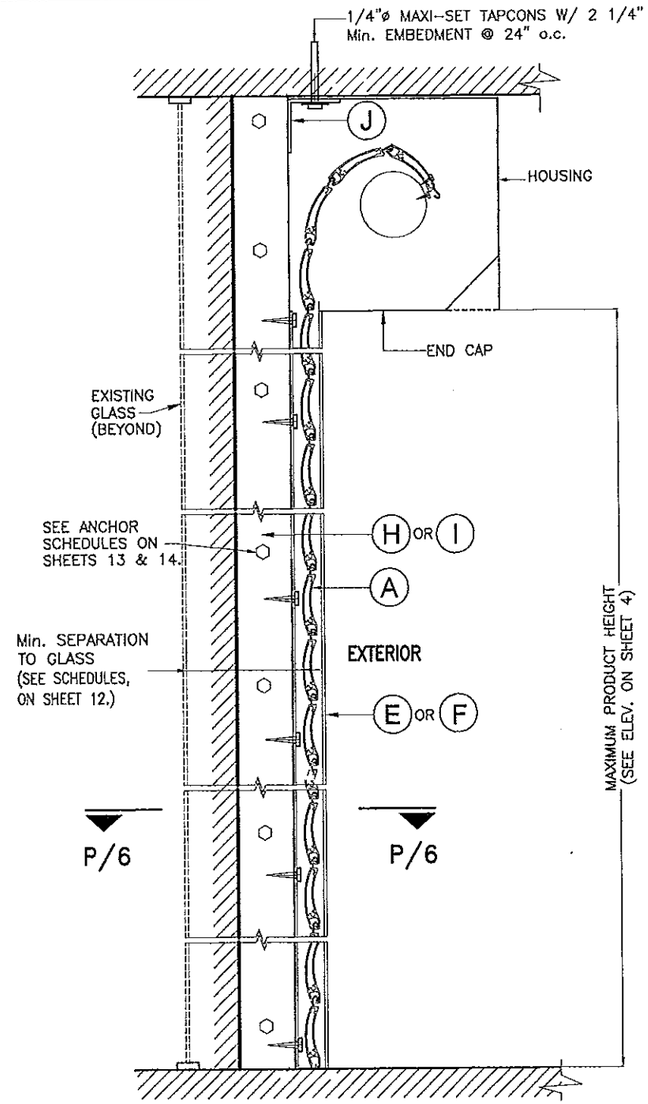

FLOOR/CEILING / TRAPPED MOUNTING

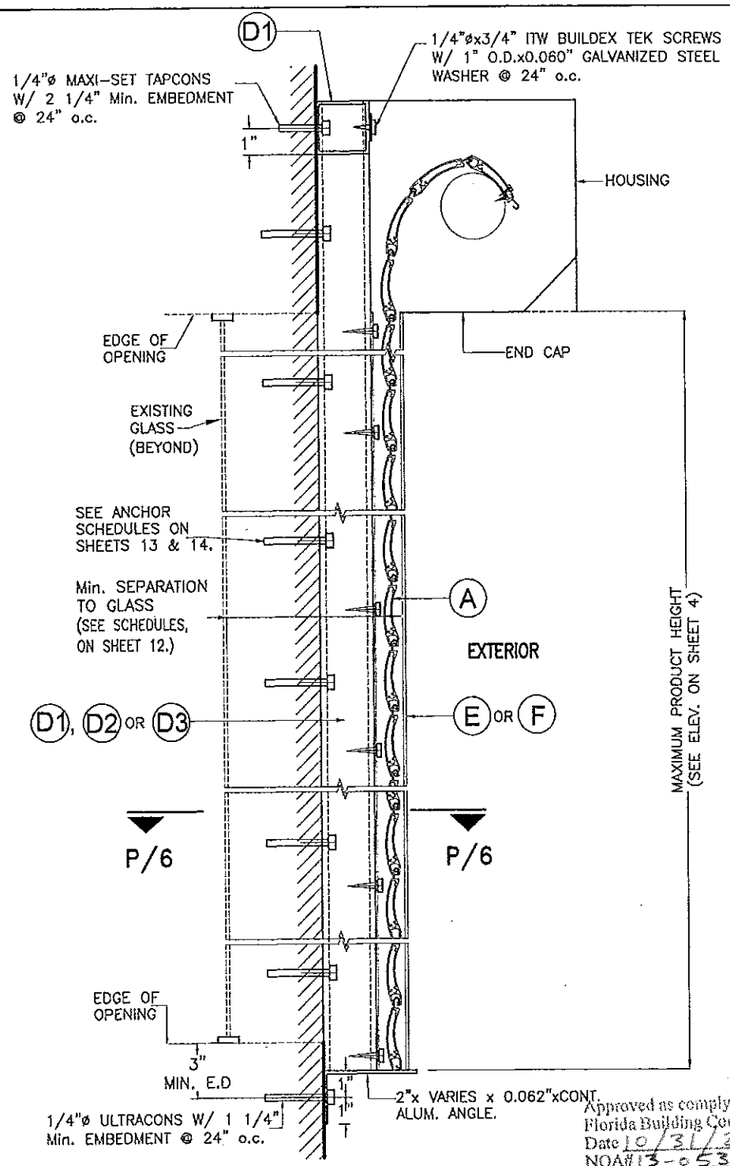

BUILD-OUT MOUNTING

Approved as complying with the Florida Building Code
Date 10/31/2013
NOA# 13-0530.11
Miami Dade Product Control
By

SECTIONS Y–Y

FLORIDA BUILDING CODE (High Velocity Hurricane Zone)

INSTALLATION DETAILS ON EXISTING POURED CONCRETE OR GROUT FILLED CELL CONCRETE BLOCK BUILDINGS FOR END RETENTION SYSTEM AS APPLICABLE

SCALE: 3/16" = 1"

WALTER A. TILLIT JR. LICENSE No. 44167 STATE OF FLORIDA PROFESSIONAL ENGINEER
P.E. SEAL/SIGNATURE/DATE

© 2013 TILTECO INC.

TILTECO INC.
TILLIT TESTING & ENGINEERING COMPANY
6355 N.W. 36th. St., Ste. 305 – VIRGINIA GARDENS, FL 33166
Phone : (305) 871-1530 , Fax : (305) 871-1531
e-mail: tilteco@aol.com
EB-0006719
WALTER A. TILLIT Jr., P.E.
FLORIDA Lic. # 44167

BERTHA ROLL-UP HURRICANE ABATEMENT
W/ 58mm ER & NER SLAT

EASTERN METAL SUPPLY, INC.
(ASSA # 1)
4268 WESTROADS DRIVE
WEST PALM BEACH, FL 33407
PH (800) 432-2204 FAX (561) 841-4592

REV. No	DESCRIPTION	DATE	REV. No	DESCRIPTION	DATE
1			3		
2			4		

A.G.
DRAWN BY:

05/22/13
DATE

13–036
DRAWING No

SHEET 5 OF 27

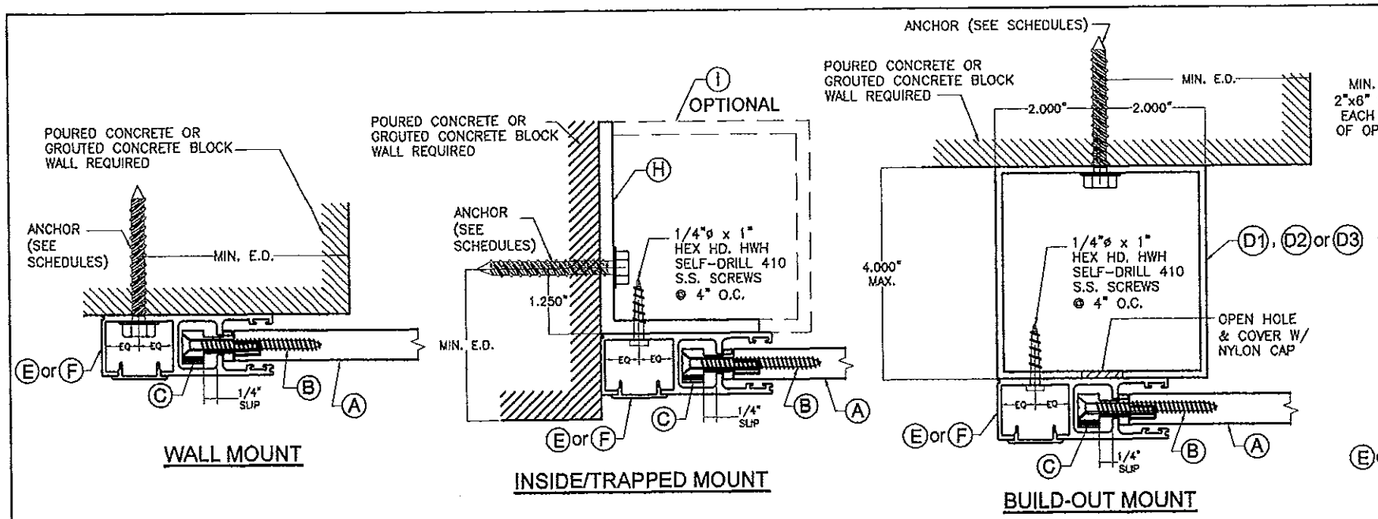

SECTIONS P-P (PLAN)

SIDE RAIL CONNECTIONS INTO EXISTING POURED CONCRETE OR GROUT FILLED BLOCK (AS APPLICABLE)

SCALE: 3/8" = 1"

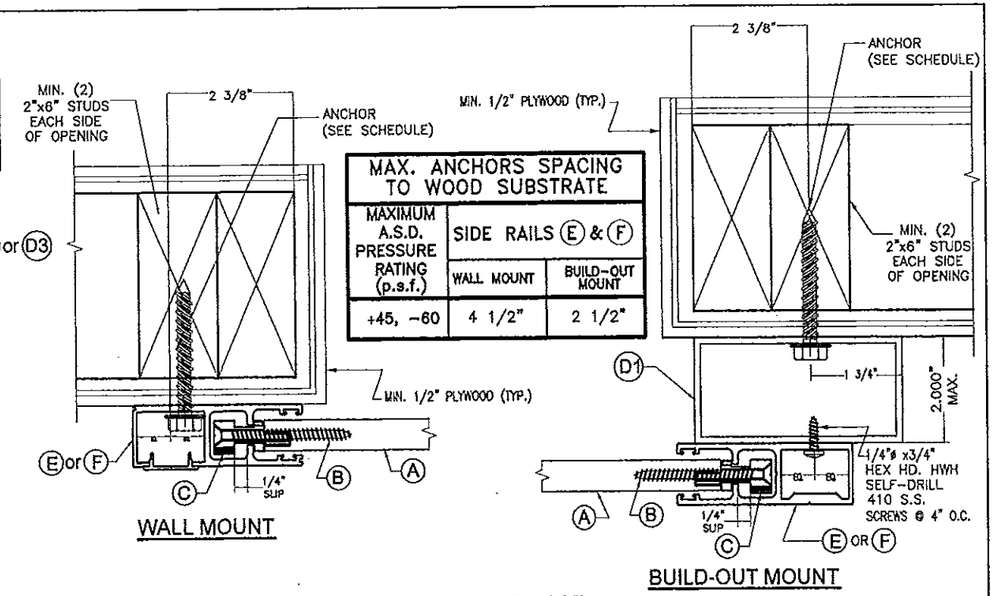

MAX. ANCHORS SPACING TO WOOD SUBSTRATE		
MAXIMUM A.S.D. PRESSURE RATING (p.s.f.)	SIDE RAILS (E) & (F)	
	WALL MOUNT	BUILD-OUT MOUNT
+45, −60	4 1/2"	2 1/2"

SECTIONS O-O (PLAN)

SIDE RAIL CONNECTIONS INTO EXISTING WOOD BUILDINGS

SCALE: 3/8" = 1"

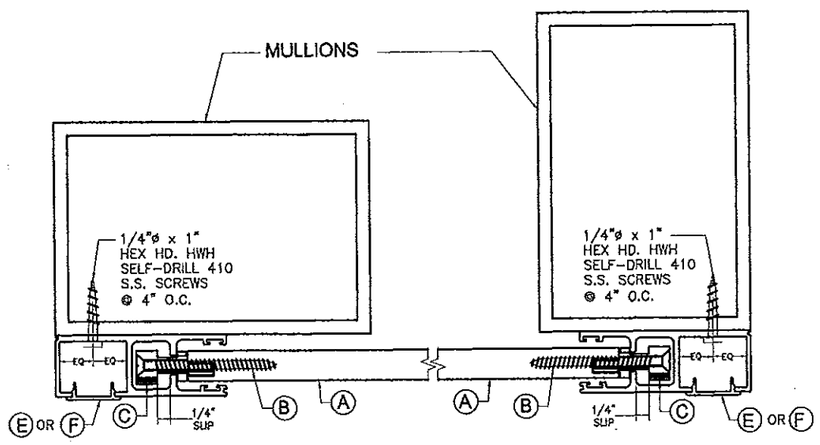

SECTION Q-Q (PLAN)

ORIENTATION #1

FACE MOUNT END MULLION

SECTION Q-Q (PLAN)

ORIENTATION #2

FACE MOUNT END MULLION

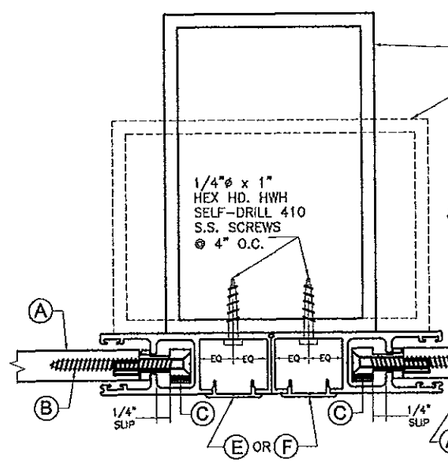

SECTION R-R (PLAN)

ORIENTATIONS #1 & #2

FACE MOUNT INTERIOR MULLION

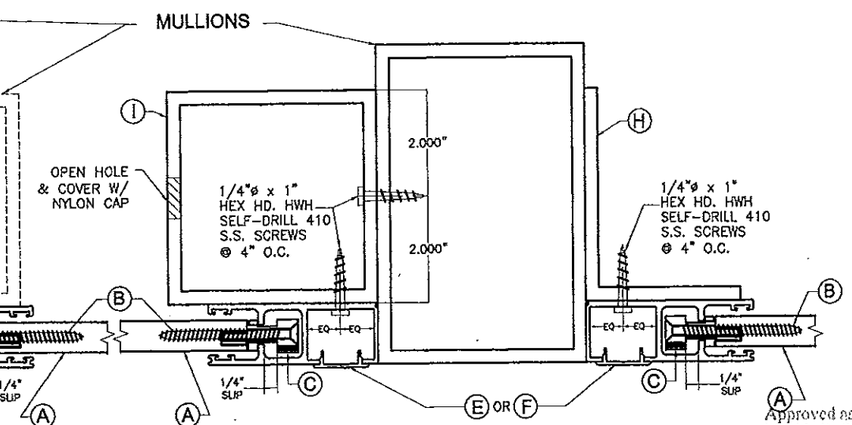

SECTION R'-R' (PLAN)

ORIENTATION #2

TRAPPED MOUNT INTERIOR MULLION

Approved as complying with the Florida Building Code
Date 10/31/2013
NOA# 13-0530.11
Miami Dade Product Control
By

FLORIDA BUILDING CODE (High Velocity Hurricane Zone)

SIDE RAIL CONNECTIONS INTO MULLIONS

SCALE: 3/8" = 1"

END RETENTION SYSTEM

WALTER A. TILLIT JR. LICENSE No. 44167 STATE OF FLORIDA PROFESSIONAL ENGINEER

P.E. SEAL/SIGNATURE/DATE

© 2013 TILTECO INC.

TILTECO INC.
TILLIT TESTING & ENGINEERING COMPANY
6355 N.W. 36th. St., Ste. 305 – VIRGINIA GARDENS, FL 33166
Phone : (305) 871-1530 , Fax : (305) 871-1531
e-mail: tilteco@aol.com
EB-0006719
WALTER A. TILLIT Jr., P.E.
FLORIDA Lic. # 44167

BERTHA ROLL-UP HURRICANE ABATEMENT W/ 58mm ER & NER SLAT

EASTERN METAL SUPPLY, INC.
(ASSA # 1)
4268 WESTROADS DRIVE
WEST PALM BEACH, FL 33407
PH (800) 432-2204 FAX (561) 841-4592

REV. No	DESCRIPTION	DATE	REV. No	DESCRIPTION	DATE
1			3		
2			4		

A.G.
DRAWN BY:

05/22/13
DATE

13-036
DRAWING No

SHEET 6 OF 27

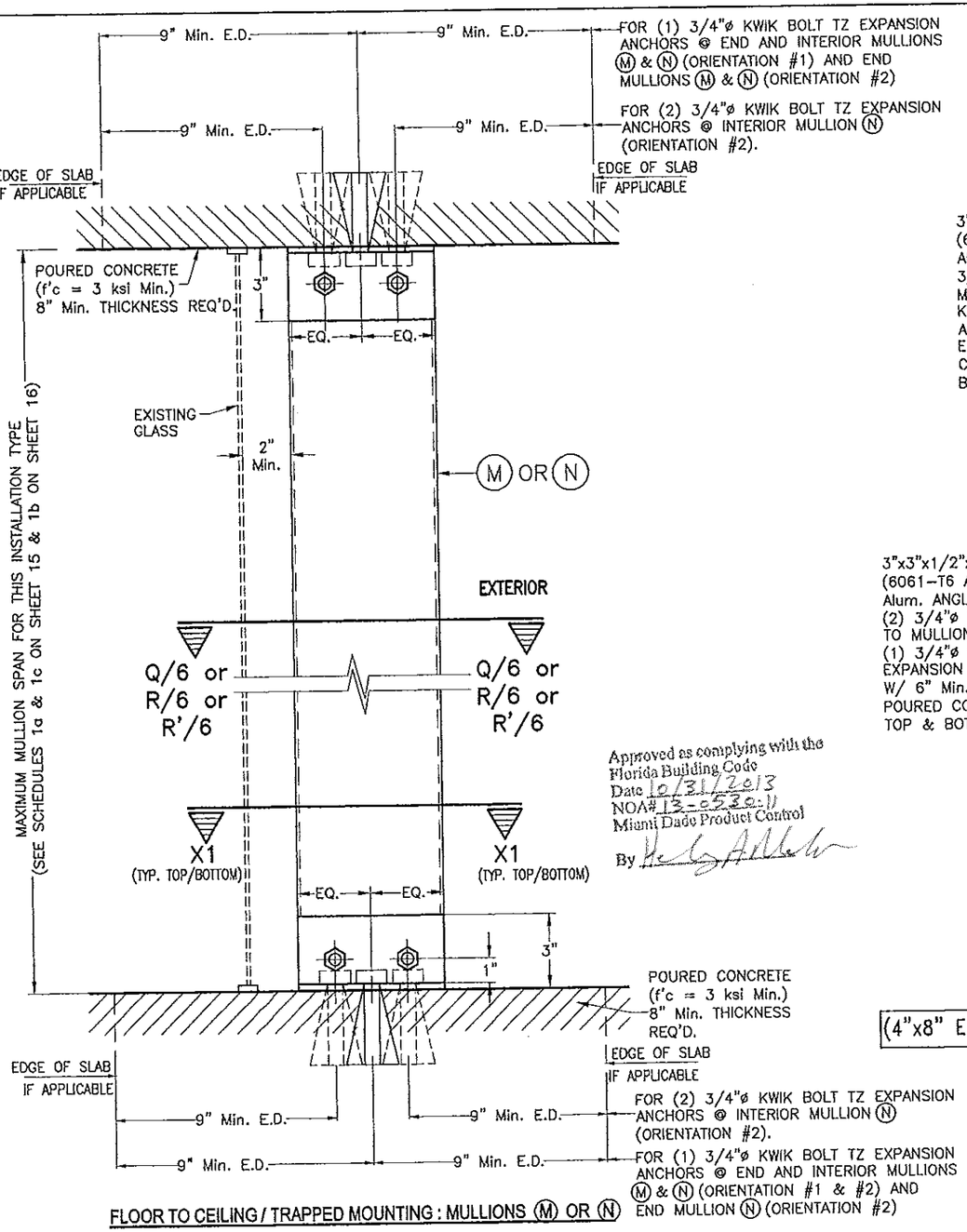

FLOOR TO CEILING / TRAPPED MOUNTING : MULLIONS (M) OR (N)

SECTIONS W-1

END & INTERIOR TRAPPED MOUNTED MULLION INSTALLATION *

APPLICABLE TO ALL INSTALLATIONS EXCEPT THOSE W/ LIMITATIONS COVERED ON SHEET 8

SCALE: 1/8" = 1"

Approved as complying with the Florida Building Code
Date 10/31/2013
NOA# 13-0530.11
Miami Dade Product Control
By

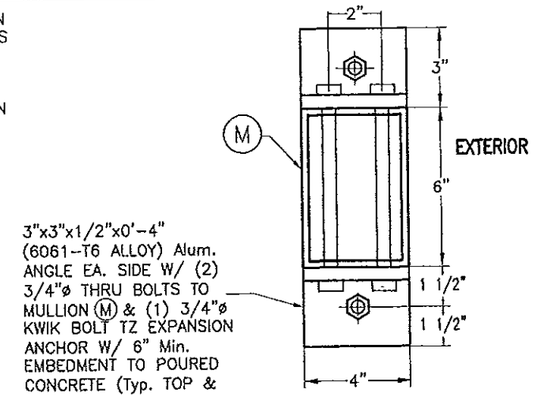

SECTION X1-X1 W/ (M) *

(4"x6" END & INTERIOR MULLION W/ ORIENTATION #1)

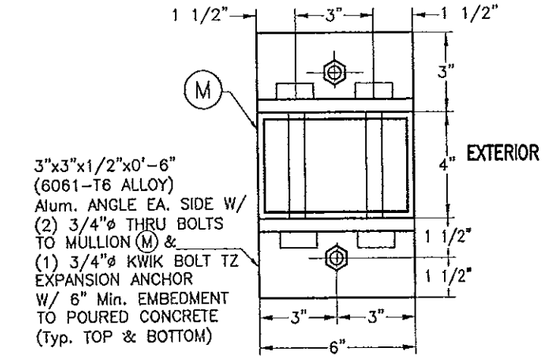

ALTERNATIVE SECTION X1-X1 W/ (M) *

(4"x6" END & INTERIOR MULLION W/ ORIENTATION #2)

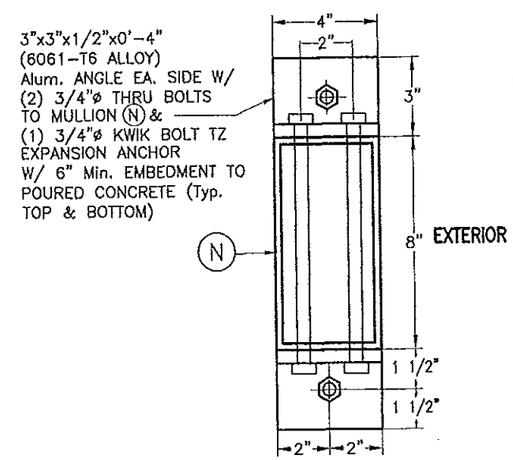

SECTION X1-X1 W/ (N) *

(4"x8" END & INTERIOR MULLION W/ ORIENTATION #1)

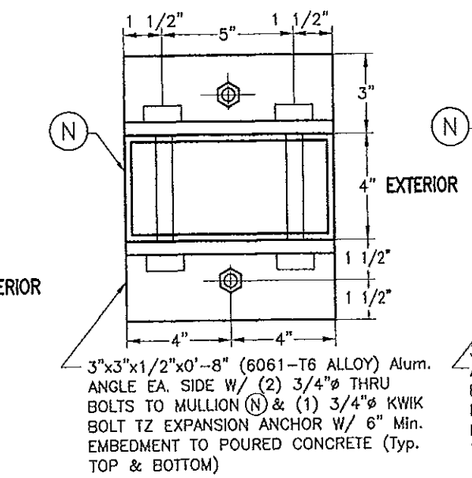

(END MULLION ONLY)

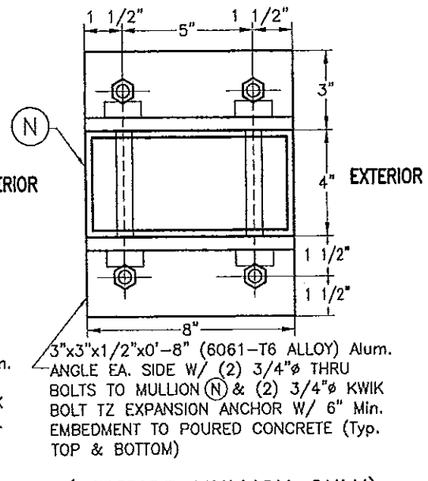

(INTERIOR MULLION ONLY)

ALTERNATIVES SECTION X1-X1 W/ (N) *

(4"x8" END & INTERIOR MULLION W/ ORIENTATION #2)

* SIDE RAILS (E) & (F) AND BOX NOT SHOWN FOR CLARITY.

END RETENTION SYSTEM

FLORIDA BUILDING CODE (High Velocity Hurricane Zone)

WALTER A. TILLIT JR. LICENSE No. 44167 STATE OF FLORIDA PROFESSIONAL ENGINEER

P.E. SEAL/SIGNATURE/DATE

© 2013 TILTECO INC.

TILTECO INC.
TILLIT TESTING & ENGINEERING COMPANY
6355 N.W. 36th. St., Ste. 305 – VIRGINIA GARDENS, FL 33166
Phone : (305) 871-1630 , Fax : (305) 871-1531
e-mail: tilteco@aol.com
EB-0006719
WALTER A. TILLIT Jr., P.E.
FLORIDA Lic. # 44167

BERTHA ROLL-UP HURRICANE ABATEMENT W/ 58mm ER & NER SLAT

EASTERN METAL SUPPLY, INC.
(ASSA # 1)
4268 WESTROADS DRIVE
WEST PALM BEACH, FL 33407
PH (800) 432-2204 FAX (561) 841-4592

REV. No	DESCRIPTION	DATE	REV. No	DESCRIPTION	DATE
1			3		
2			4		

A.G.
DRAWN BY:

05/22/13
DATE

13-036
DRAWING No

SHEET 7 OF 27

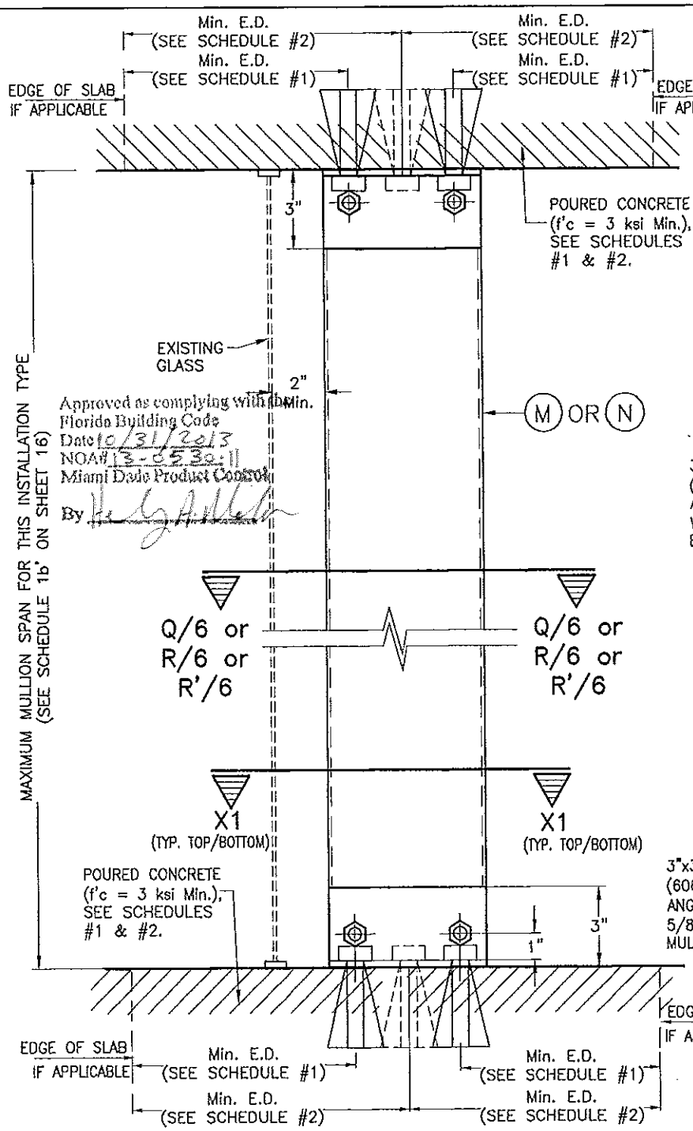

Approved as complying with the Florida Building Code
Date 10/31/2013
NOA# 13-0530.11
Miami Dade Product Control
By

FLOOR TO CEILING / TRAPPED MOUNTING : MULLIONS (M) OR (N)

SECTIONS W-1

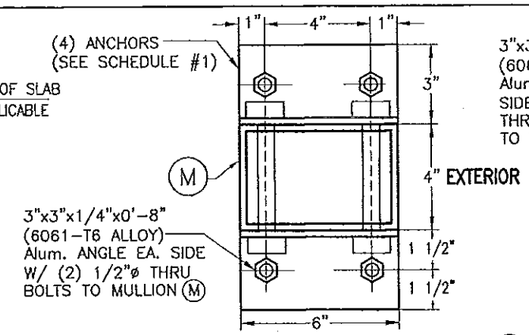

ALTERNATIVE SECTION X1-X1 W/ (M) *

(4"x6" INTERIOR MULLION ONLY W/ ORIENTATION # 2)

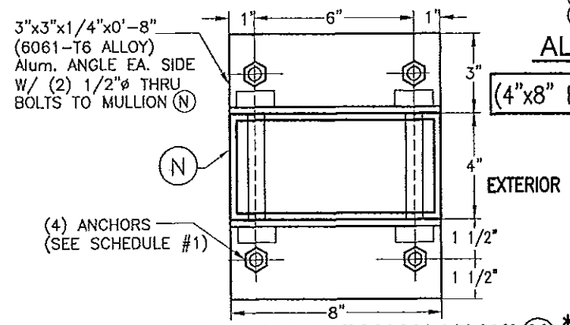

ALTERNATIVE SECTION X1-X1 W/ (N) *

(4"x8" INTERIOR MULLION ONLY W/ ORIENTATION # 2)

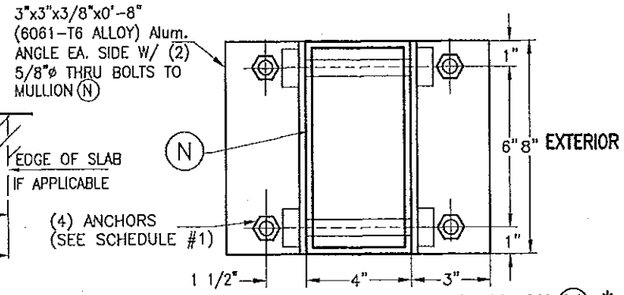

ALTERNATIVE SECTION X1-X1 W/ (N) *

(4"x8" END & INTERIOR MULLION W/ ORIENTATION # 1)

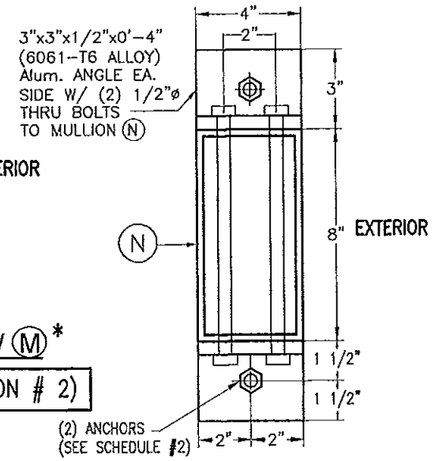

ALTERNATIVE SECTION X1-X1 W/ (N) *

(4"x8" END & INTERIOR MULLION W/ ORIENTATION # 1)

◊ SEE MAXIMUM (M) (INTERIOR) & (N) (END & INTERIOR) TRAPPED MOUNTED MULLIONS SPAN COVERED BY SCHEDULE 1b' FOR INSTALLATION CASES I, Ia & II ON SHEET 16. (LIMITED LOAD, MULLION SPACING AND SPAN INSTALLATION):

INSTALLATION CASE I – RESIDENTIAL AND COMMERCIAL APPLICATIONS WITH ±60.8 p.s.f. MAXIMUM A.S.D. DESIGN LOAD, 12'-0" MAXIMUM MULLION SPACING. SEE SCHEDULES #1 & #2 FOR ANCHOR SPECS.

INSTALLATION CASE Ia – RESIDENTIAL AND COMMERCIAL APPLICATION W/ ±60.8 p.s.f. MAXIMUM A.S.D. DESIGN LOAD, 8'-0" MAXIMUM MULLION SPACING. SEE SCHEDULES #1 & #2 FOR ANCHOR SPECS.

INSTALLATION CASE II – COMMERCIAL APPLICATION FOR ±100.0 p.s.f. MAXIMUM A.S.D. DESIGN LOAD, 8'-0" MAXIMUM MULLION SPACING. SEE SCHEDULES #1 & #2 FOR ANCHOR SPECS.

* SIDE RAILS (E) & (F) AND BOX NOT SHOWN FOR CLARITY.

SCHEDULE #1

INSTALLATION CASES	MIN. SLAB THICKNESS REQ'D.	ANCHOR TYPE & SIZE (TYP. TOP & BOTTOM)	MIN. ANCHOR EMBEDMENT	MIN. EDGE DISTANCE FOR ANCHOR
I	4"	3/8"ø HILTI INC KWIK HUS-H SCREW & 3/8"ø POWER FASTENER WEDGE-BOLT ANCHOR FOR (M) & (N) (INTERIOR) MULLIONS W/ ORIENTATION #2.	2 1/2"	5 1/2"
		1/2"ø HILTI INC KWIK HUS-H SCREW & 1/2"ø POWER FASTENER WEDGE- BOLT ANCHOR FOR (N) (END & INTERIOR) MULLION W/ ORIENTATION #1.	3"	6"
Ia	4"	1/2"ø HILTI INC KWIK BOLT TZ ONLY FOR (M) & (N) INTERIOR MULLIONS W/ ORIENTATION #2) & (N) (END MULLION W/ ORIENTATION #1).	2 1/2"	5 1/2"
		1/2"ø HILTI INC KWIK HUS-H SCREW & 1/2"ø POWER FASTENER WEDGE- BOLT ANCHOR FOR (M) & (N) (END OR INTERIOR MULLION) W/ ORIENTATIONS #1 OR #2.	3"	6"
II	6"	1/2"ø HILTI INC KWIK BOLT TZ ONLY FOR (M) & (N) INTERIOR MULLIONS W/ ORIENTATION #2) & (N) (END MULLION W/ ORIENTATION #1).	3 1/4"	7 1/2"
		1/2"ø HILTI INC KWIK HUS-H SCREW OR 1/2"ø POWER FASTENER WEDGE- BOLT ANCHOR SEE * NOTE ON SCHEDULE 1b' ON SHEET 25. VALID FOR END & INTERIOR MULLIONS (M) & (N) W/ ORIENTATIONS #1 OR #2.	3"	6"

SCHEDULE #2

INSTALLATION CASES	MIN. SLAB THICKNESS REQ'D.	ANCHOR TYPE & SIZE (TYP. TOP & BOTTOM)	MIN. ANCHOR EMBEDMENT	MIN. EDGE DISTANCE FOR ANCHOR
I, Ia & II	4"	5/8"ø HILTI INC KWIK HUS-H SCREW & 5/8"ø POWER FASTENER WEDGE-BOLT ANCHOR W/ ORIENTATION #1.	2 1/2"	7 1/2"

FLORIDA BUILDING CODE (High Velocity Hurricane Zone)

◊ END & INTERIOR TRAPPED MOUNTED MULLION INSTALLATION *

APPLICABLE TO A LIMITED LOAD, MULLION SPAN AND MULLION SPACING INSTALLATIONS

SCALE: 1/8" = 1"

END RETENTION SYSTEM

WALTER A. TILLIT JR. LICENSE No. 44167 STATE OF FLORIDA PROFESSIONAL ENGINEER

P.E. SEAL/SIGNATURE/DATE

© 2013 TILTECO INC.

TILTECO INC.
TILLIT TESTING & ENGINEERING COMPANY
6355 N.W. 36th St., Ste. 305 - VIRGINIA GARDENS, FL 33166
Phone : (305) 871-1530 , Fax : (305) 871-1531
e-mail: tilteco@aol.com
EB-0006719
WALTER A. TILLIT Jr., P.E.
FLORIDA Lic. # 44167

BERTHA ROLL-UP HURRICANE ABATEMENT W/ 58mm ER & NER SLAT

EASTERN METAL SUPPLY, INC.
(ASSA # 1)
4268 WESTROADS DRIVE
WEST PALM BEACH, FL 33407
PH (800) 432-2204 FAX (561) 841-4592

REV. No	DESCRIPTION	DATE	REV. No	DESCRIPTION	DATE
1			3		
2			4		

A.G.
DRAWN BY:

05/22/13
DATE

13-036
DRAWING No

SHEET 8 OF 27

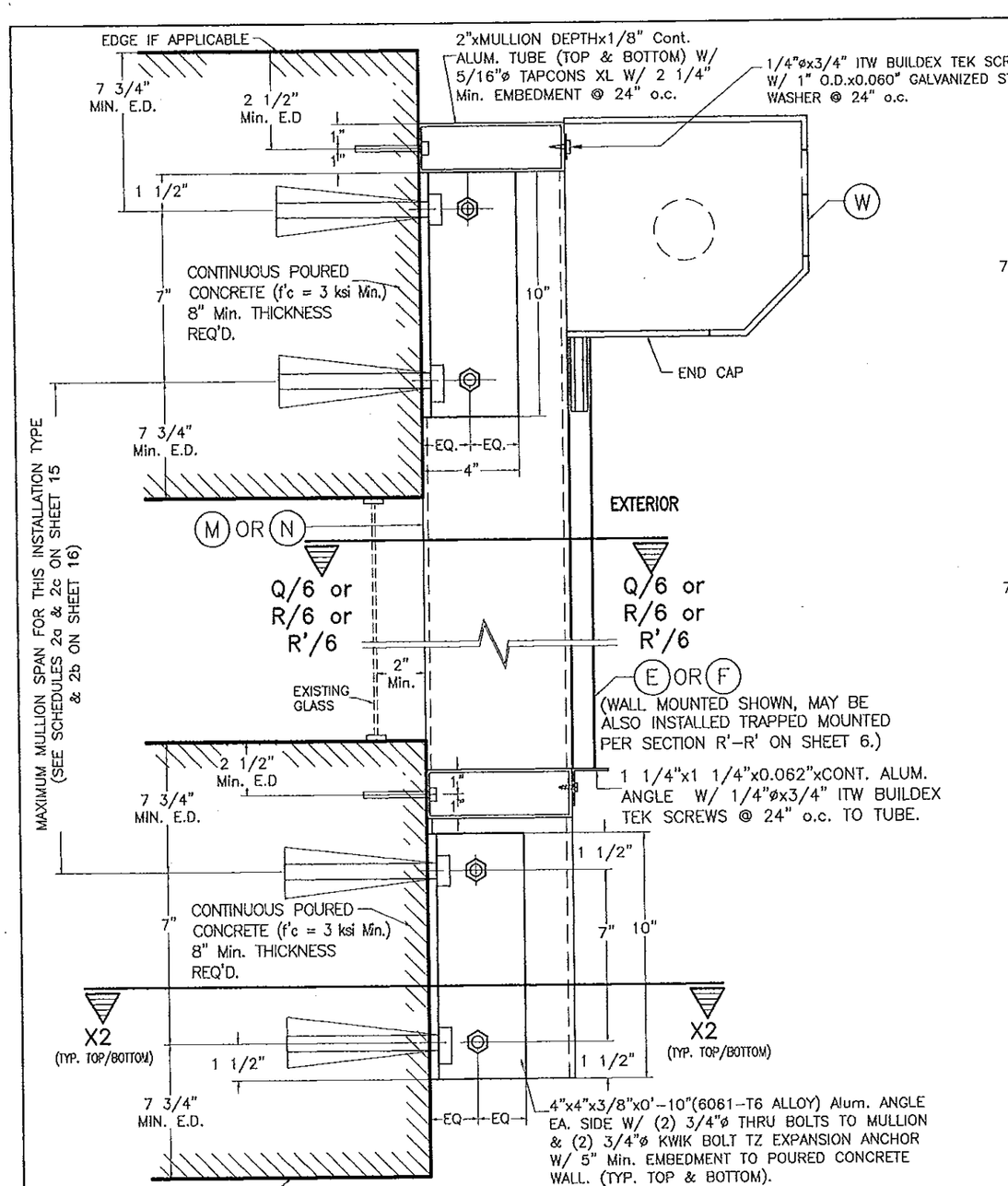

WALL MOUNTING : MULLIONS (M) OR (N)
POURED CONCRETE WALL

SECTION W-2

END & INTERIOR WALL MOUNTED MULLION INSTALLATION

APPLICABLE TO ALL INSTALLATIONS EXCEPT THOSE W/ LIMITATIONS COVERED ON SHEET 10

SCALE: 1/8" = 1"

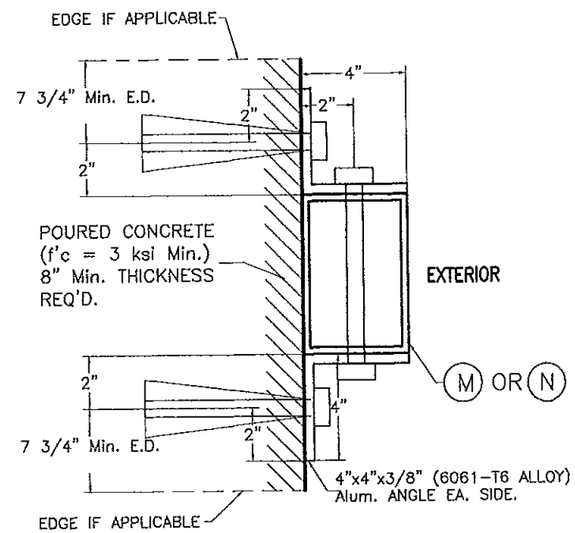

SECTION X2-X2 W/ (M) OR (N) *

(END & INTERIOR MULLION)

(W/ ORIENTATION # 1)

(6"x4" or 8"x4")

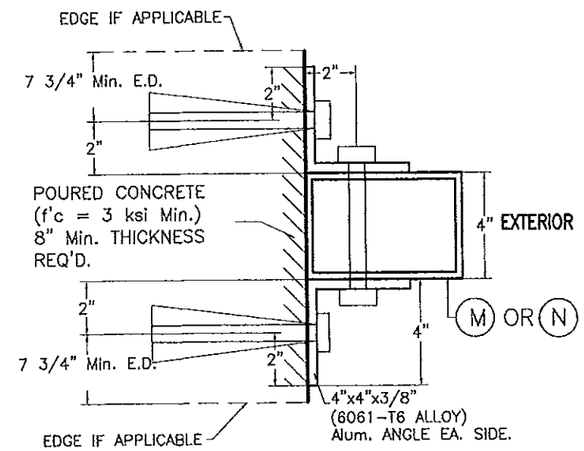

ALTERNATIVE SECTION X2-X2 W/ (M) OR (N) *

(END & INTERIOR MULLION)

(W/ ORIENTATION # 2)

(4"x6" or 4"x8")

* SIDE RAILS (E) & (F) AND BOX NOT SHOWN FOR CLARITY.

END RETENTION SYSTEM

Approved as complying with the Florida Building Code
Date 10/31/2013
NOA# 13-0530.11
Miami Dade Product Control
By

FLORIDA BUILDING CODE (High Velocity Hurricane Zone)

WALTER A. TILLIT JR. LICENSE No. 44167 STATE OF FLORIDA PROFESSIONAL ENGINEER
P.E. SEAL/SIGNATURE/DATE

© 2013 TILTECO INC.

TILTECO INC.
TILLIT TESTING & ENGINEERING COMPANY
6355 N.W. 36th. St. Ste. 305 - VIRGINIA GARDENS, FL 33166
Phone : (305) 871-1530 , Fax : (305) 871-1531
e-mail: tilteco@aol.com
EB-0006719
WALTER A. TILLIT Jr., P.E.
FLORIDA Lic. # 44167

BERTHA ROLL-UP HURRICANE ABATEMENT
W/ 58mm ER & NER SLAT

EASTERN METAL SUPPLY, INC.
(ASSA # 1)
4268 WESTROADS DRIVE
WEST PALM BEACH, FL 33407
PH (800) 432-2204 FAX (561) 841-4592

REV. No	DESCRIPTION	DATE	REV. No	DESCRIPTION	DATE
1			3		
2			4		

A.G.
DRAWN BY:

05/22/13
DATE

13-036
DRAWING No

SHEET 9 OF 27

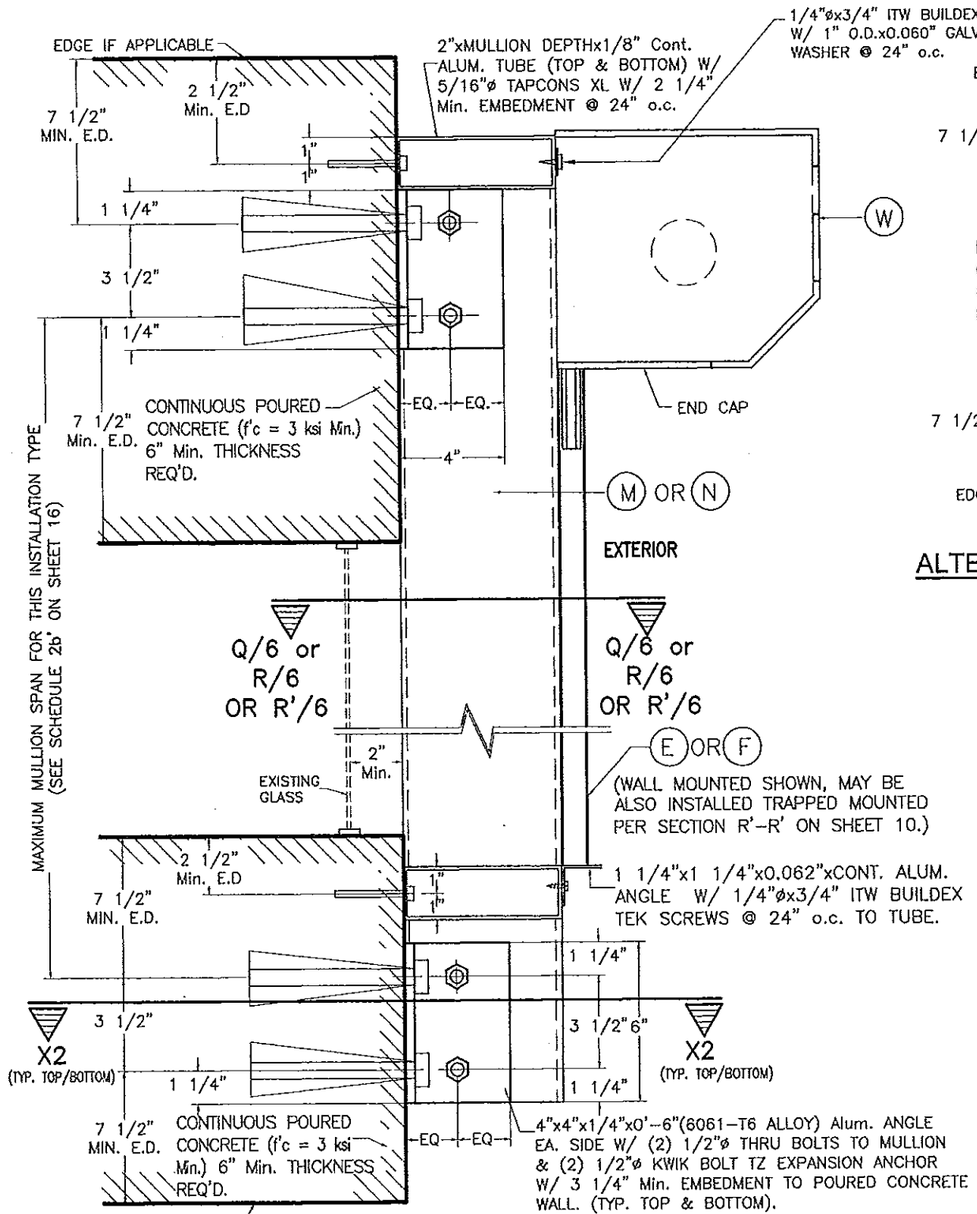

WALL MOUNTING : MULLIONS (M) OR (N)
POURED CONCRETE WALL

SECTION W-2

◊ END & INTERIOR WALL MOUNTED MULLION INSTALLATION

APPLICABLE TO A LIMITED LOAD, MULLION SPAN AND MULLION SPACING INSTALLATIONS

SCALE: 1/8" = 1"

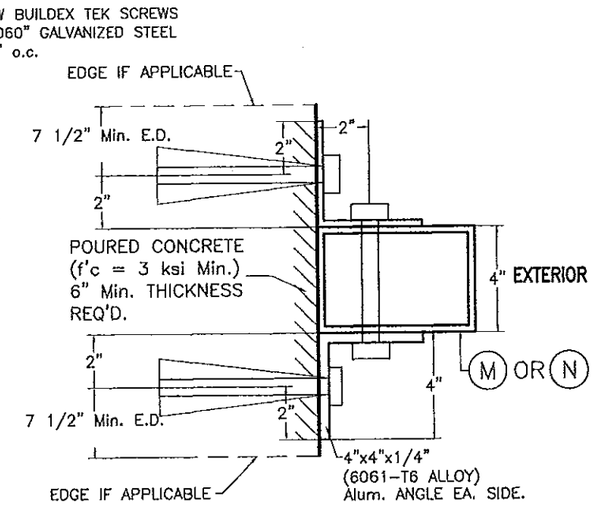

ALTERNATIVE SECTION X2-X2 W/ (M) OR (N) *

(INTERIOR MULLION)
(W/ ORIENTATION # 2)
(4"x6" or 4"x8")

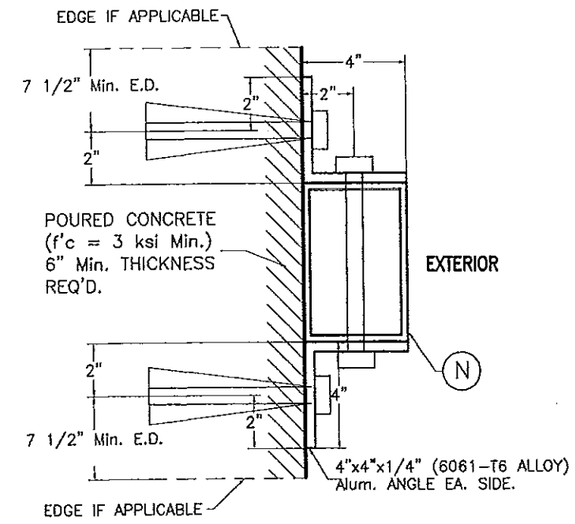

ALTERNATIVE SECTION X2-X2 W/ (N)*

(END & INTERIOR MULLIONS)
(W/ ORIENTATION # 1)
(8"x4")

*** SIDE RAILS (E) & (F) AND BOX NOT SHOWN FOR CLARITY.**

◊ SEE MAXIMUM (M) (INTERIOR) & (N) (END & INTERIOR) WALL MOUNTED MULLIONS SPAN COVERED BY SCHEDULE 2b' FOR INSTALLATION CASES I' & II' ON SHEET 16 (LIMITED LOAD, MULLION SPACING AND SPAN INSTALLATION):

INSTALLATION CASE I' – RESIDENTIAL AND COMMERCIAL APPLICATIONS WITH ±60.8 p.s.f. MAXIMUM A.S.D. DESIGN LOAD, 12'-0" MAXIMUM MULLION SPACING. VALID FOR CONNECTION TO CONCRETE W/ HILTI INC KWIK HUS-H OR POWER FASTENERS WEDGE-BOLT ANCHORS.

INSTALLATION CASE II' – COMMERCIAL APPLICATION FOR ±100.0 p.s.f. MAXIMUM A.S.D. DESIGN LOAD, 8'-0" MAXIMUM MULLION SPACING. VALID FOR CONNECTION TO CONCRETE W/ HILTI INC KWIK BOLT TZ ANCHORS.

Approved as complying with the Florida Building Code
Date 10/31/2013
NOA# 13-0530.11
Miami Dade Product Control
By

END RETENTION SYSTEM

FLORIDA BUILDING CODE (High Velocity Hurricane Zone)

WALTER A. TILLIT JR. LICENSE No. 44167 STATE OF FLORIDA PROFESSIONAL ENGINEER
P.E. SEAL/SIGNATURE/DATE

© 2013 TILTECO INC.

TILTECO INC.
TILLIT TESTING & ENGINEERING COMPANY
6355 N.W. 36th. St., Ste. 305 – VIRGINIA GARDENS, FL 33166
Phone : (305) 871-1530 , Fax : (305) 871-1531
e-mail: tilteco@aol.com
EB-0006719
WALTER A. TILLIT Jr., P.E.
FLORIDA Lic. # 44167

BERTHA ROLL-UP HURRICANE ABATEMENT W/ 58mm ER & NER SLAT

EASTERN METAL SUPPLY, INC.
(ASSA # 1)
4268 WESTROADS DRIVE
WEST PALM BEACH, FL 33407
PH (800) 432-2204 FAX (561) 841-4592

REV. No	DESCRIPTION	DATE	REV. No	DESCRIPTION	DATE
1			3		
2			4		

A.G.
DRAWN BY:

05/22/13
DATE

13-036
DRAWING No

SHEET 10 OF 27

END RETENTION SYSTEM

TYPICAL MANDATORY PROCEDURE FOR VERIFYING PRODUCT CODE COMPLIANCE RELATED TO ITS INSTALLATION INTO EXISTING POURED CONCRETE OR GROUTED CONCRETE BLOCK STRUCTURES

STEP 1: OBTAIN JOB SITE'S A.S.D. DESIGN LOAD (p.s.f.) FOR THE OPENING AND DESIRED PRODUCT SPAN "L" (ft) TO PROTECT (SEE GENERAL NOTE #1, SHEET 1).

STEP 2: ENTER TO CHARTS Ia OR Ib ON SHEET 12 TO DETERMINE, BASED ON 1/4" SLAT SLIP (in), ANCHOR TYPE AT SIDE RAILS; A.S.D. DESIGN LOAD (p.s.f.); AND THE MAXIMUM SLAT SPAN "LMAX" (ft).

THE FOLLOWING INFORMATION IS PROVIDED AT CHARTS Ia, Ib & Ic TO PROCEED WITH PRODUCT INSTALLATION VERIFICATION:

- ENTER A.S.D. DESIGN LOAD: SEE STEP (1) ABOVE.

  LMAX: THIS IS THE MAXIMUM ALLOWABLE SLAT SPAN FOR WHICH A 1/4" SLAT SLIP MAY BE USED, FOR A GIVEN A.S.D. DESIGN LOAD.

- MINIMUM REQUIRED SEPARATION TO GLASS IS PROVIDED ON CHART Ic (SEE STEP 4).

STEP 3: OBTAIN INFORMATION ON PRODUCT'S SIDE RAIL ANCHOR SPACING REQUIREMENTS FOR CONNECTION TO EXISTING STRUCTURE FROM ANCHOR SCHEDULES IIa, IIb, IIIa & IIIb ON SHEETS 13 & 14. ENTER SCHEDULES WITH FINALLY DETERMINED ANCHOR TYPE, SUBSTRATE, MOUNTING TYPE, A.S.D. DESIGN LOAD & PRODUCT SPAN AND OBTAIN MAXIMUM ANCHOR SPACING (INCHES ON CENTERS). SEE GENERAL NOTE 5 ON SHEET 1 FOR ANCHOR SPECS.

STEP 4: IF PRODUCT INSTALLATION INCLUDES MULLIONS, THE FOLLOWING MANDATORY ADDITIONAL PROCEDURES ARE APPLICABLE.

PROCEDURE 4a:

1. MINIMUM SEPARATION TO GLASS FOR SLATS IF MULLIONS ARE USED SHALL BE BASED ON INSTALLATIONS INDICATED ON CHART Ic ON SHEET 12. IT SHALL BE MEASURED FROM BACK OF SLAT TO GLASS.
2. ENTER SCHEDULES 1a THRU 2c ON SHEETS 15 & 16 W/ A.S.D. DESIGN LOAD ; MAXIMUM MULLION SPACING (MAX., 12', 8' OR 7'), AND DETERMINE MAXIMUM MULLION SPAN (HEIGHT) W/ ALLOWABLE INTERPOLATION IN BETWEEN SPACINGS FOR A GIVEN (Ⓜ Ⓝ), MULLION TYPE & MULLION ORIENTATION.
3. SEE SHEETS 7 THRU 10 FOR REQUIRED MULLION CONNECTION DETAILS AT TOP & BOTTOM FOR FLOOR TO CEILING (TRAPPED) OR WALL MOUNTINGS OF MULLIONS INTO CONCRETE FOR A GIVEN MULLION TYPE (Ⓜ,Ⓝ)

Approved as complying with the
Florida Building Code
Date 10/31/2013
NOA# 13-0530.11
Miami Dade Product Control
By

FLORIDA BUILDING CODE (High Velocity Hurricane Zone)

WALTER A. TILLIT JR. LICENSE No. 44167 STATE OF FLORIDA PROFESSIONAL ENGINEER
REGISTERED SEAL/SIGNATURE/DATE

© 2013 TILTECO INC.

TILTECO INC.
TILLIT TESTING & ENGINEERING COMPANY
8355 N.W. 36th. St., Ste. 305 -- VIRGINIA GARDENS, FL 33166
Phone : (305) 871-1530 , Fax : (305) 871-1531
e-mail: tilteco@aol.com
E8-0006719
WALTER A. TILLIT Jr., P.E.
FLORIDA Lic. # 44167

BERTHA ROLL-UP HURRICANE ABATEMENT
W/ 58mm ER & NER SLAT

EASTERN METAL SUPPLY, INC.
(ASSA # 1)
4268 WESTROADS DRIVE
WEST PALM BEACH, FL 33407
PH (800) 432-2204 FAX (561) 841-4592

REV. No	DESCRIPTION	DATE	REV. No	DESCRIPTION	DATE
1			3		
2			4		

A.G.
DRAWN BY:

05/22/13
DATE

13-036
DRAWING No

SLAT PERFORMANCE CHARTS (POURED CONCRETE)

SLAT PERFORMANCE CHARTS **Ia, Ib & Ic**: (ONLY VALID FOR 1/4" SLIP)
FOR A GIVEN A.S.D. DESIGN LOAD (p.s.f), PRODUCT MOUNT CONDITION INCLUDING ANCHOR TYPE

CHART **Ia**					CHART **Ib**				CHART **Ic**
USE MAXIMUM VALUE BETWEEN POSITIVE AND NEGATIVE A.S.D. LOAD									USE MAXIMUM POSITIVE A.S.D. LOAD VALUE
3/8"Ø WEDGE BOLT ANCHOR					5/16"ø ULTRACON ANCHOR				
A.S.D. DESIGN LOAD (psf)	MAX. SLAT SPAN "LMAX." (FT)				MAX. SLAT SPAN "LMAX." (FT)				REQUIRED MIN. SEPARATION TO GLASS MEASURED TO BACK OF SLAT (in)
	WALL MOUNT SEE NOTES *	TRAPPED MOUNT SEE NOTES *	BUILD-OUT MOUNT W/ 01 SEE NOTES *	BUILD-OUT MOUNT W/ 02, 03 SEE NOTES *	WALL MOUNT SEE NOTES *	TRAPPED MOUNT SEE NOTES *	BUILD-OUT MOUNT W/ 01 SEE NOTES *	BUILD-OUT MOUNT W/ 02, 03 SEE NOTES *	
30.0	22'-10"	22'-6"	20'-0"	17'-0"	18'-9"	14'-6"	12'-0"	10'-3"	8 1/4"
35.0	22'-10"	22'-6"	18'-0"	15'-3"	16'-10"	13'-0"	11'-0"	9'-3"	8 1/4"
40.0	22'-10"	22'-0"	16'-6"	14'-0"	15'-6"	12'-0"	10'-0"	8'-5"	8 1/4"
45.0	21'-0"	21'-10"	15'-0"	13'-0"	14'-3"	11'-0"	9'-6"	7'-10"	8"
50.0	20'-0"	19'-10"	14'-0"	12'-3"	13'-0"	10'-4"	8'-9"	7'-4"	7 3/4"
55.0	19'-0"	19'-0"	13'-3"	11'-4"	12'-0"	10'-0"	8'-3"	6'-10"	7 1/2"
60.0	17'-9"	18'-0"	12'-3"	10'-9"	11'-3"	9'-6"	7'-9"	6'-6"	7 1/2"
65.0	16'-10	17'-0"	11'-6"	10'-3"	10'-9"	9'-0"	7'-6"	6'-3"	7 1/4"
70.0	16'-0"	16'-0"	10'-9"	9'-9"	10'-4"	8'-9"	7'-3"	6'-0"	7"
75.0	15'-0"	15'-0"	10'-3"	9'-3"	10'-0"	8'-5"	7'-0"	5'-10"	7"
80.0	14'-6"	14'-3"	9'-0"	8'-9"	9'-6"	7'-6"	6'-9"	5'-9"	6 3/4"
85.0	13'-6"	13'-9"	9'-4"	8'-4"	9'-0"	7'-2"	6'-8"	5'-8"	6 1/2"
90.0	12'-6"	13'-3"	9'-0"	8'-0"	8'-9"	6'-9"	6'-6"	5'-7"	6 1/2"
95.0	11'-6"	12'-9"	8'-9"	7'-8"	8'-6"	6'-4"	6'-4"	5'-6"	6 1/8"
100.0	10'-6"	12'-3"	8'-6"	7'-5"	8'-3"	6'-0"	6'-2"	5'-5"	6"
105.0	9'-6"	11'-9"	8'-3"	7'-2"	8'-0"	5'-11"	6'-1"	5'-4"	5 5/8"
110.0	9'-5"	11'-3"	8'-0"	7'-0"	7'-9"	5'-9"	6'-0"	5'-3"	5 5/8"
115.0	9'-4"	11'-0"	7'-10"	6'-10"	7'-7"	5'-6"	5'-11"	5'-2"	5 5/8"
120.0	9'-3"	10'-9"	7'-9"	6'-8"	7'-6"	5'-5"	5'-10"	5'-0"	5 5/8"
125.0	9'-0"	10'-7"	7'-6"	6'-6"	7'-4"	5'-4"	5'-9"	4'-11"	5 1/2"
130.0	8'-10"	10'-6"	7'-3"	6'-4"	7'-3"	5'-3"	5'-8"	4'-10"	5 1/2"
135.0	8'-9"	10'-3"	7'-0"	6'-2"	7'-0"	5'-2"	5'-7"	4'-9"	5 1/2"
140.0	8'-6"	10'-0"	6'-10"	6'-0"	6'-10"	5'-0"	5'-6"	4'-8"	5 1/2"

* NOTES:

1. ABOVE INDICATED MAX. SLAT SPANS MAY BE USED AS LONG AS ANCHOR SPACING SCHEDULES ON SHEET 13 INDICATE THAT AN ANCHOR SPACING IS AVAILABLE FOR THE CORRESPONDING SLAT SPAN AND DESIGN LOAD.
2. REQUIRES SIDE RAILS FASTENED TO EXISTING STRUCTURE WITH **3/8"ø WEDGE-BOLT ANCHOR OR 5/16"ø ULTRACON ANCHOR,** INTO POURED CONCRETE OR WITH 1/4"ø HEX HD. HWH SELF-DRILL 410 S.S. SCREWS AT MULLIONS CONNECTION. VALID FOR WALL MOUNTED, TRAPPED MOUNTED, AND BUILD-OUT MOUNTED.
3. MAXIMUM SLAT SPANS FOR INTERMEDIATE LOADS MAY BE DETERMINED BY LINEAR INTERPOLATION BETWEEN END VALUES.

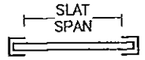

SLAT SPAN DEFINITION

END RETENTION SYSTEM

SLAT PERFORMANCE CHARTS (GROUTED CONCRETE BLOCK)

SLAT PERFORMANCE CHARTS **Ia, Ib & Ic**: (ONLY VALID FOR 1/4" SLIP)
FOR A GIVEN A.S.D. DESIGN LOAD (p.s.f), PRODUCT MOUNT CONDITION INCLUDING ANCHOR TYPE

CHART **Ia**					CHART **Ib**				CHART **Ic**
USE MAXIMUM VALUE BETWEEN POSITIVE AND NEGATIVE A.S.D. LOAD									USE MAXIMUM POSITIVE A.S.D. LOAD VALUE
3/8"Ø KWIK HUS BOLT ANCHOR					5/16"ø ULTRACON ANCHOR				
A.S.D. DESIGN LOAD (psf)	MAX. SLAT SPAN "LMAX." (FT)				MAX. SLAT SPAN "LMAX." (FT)				REQUIRED MIN. SEPARATION TO GLASS MEASURED TO BACK OF SLAT (in)
	WALL MOUNT SEE NOTES *	TRAPPED MOUNT SEE NOTES *	BUILD-OUT MOUNT W/ 01 SEE NOTES *	BUILD-OUT MOUNT W/ 02, 03 SEE NOTES *	WALL MOUNT SEE NOTES *	TRAPPED MOUNT SEE NOTES *	BUILD-OUT MOUNT W/ 01 SEE NOTES *	BUILD-OUT MOUNT W/ 02, 03 SEE NOTES *	
30.0	14'-6"	14'-7"	11'-0"	9'-7"	10'-6"	8'-6"	8'-0"	7'-8"	7 1/2"
35.0	13'-2"	13'-3"	10'-0"	8'-11"	9'-6"	7'-10"	7'-4"	7'-2"	7"
40.0	12'-0"	12'-0"	9'-4"	8'-4"	9'-0"	7'-4"	6'-9"	7'-0"	7"
45.0	11'-3"	11'-0"	8'-10"	7'-11"	8'-6"	6'-10"	6'-7"	6'-8"	6 1/2"
50.0	10'-6"	10'-3"	8'-4"	7'-6"	8'-2"	6'-6"	6'-4"	6'-5"	6 1/2"
55.0	9'-11"	9'-7"	7'-11"	7'-3"	7'-9"	6'-3"	6'-2"	6'-3"	6 1/8"
60.0	9'-4"	9'-0"	7'-7"	6'-11"	7'-3"	6'-0"	6'-0"	6'-0"	6"
65.0	8'-11"	8'-7"	7'-4"	6'-9"	7'-0"	5'-10"	5'-11"	5'-11"	6"
70.0	8'-8"	8'-2"	7'-1"	6'-6"	6'-7"	5'-7"	5'-10"	5'-10"	6"
75.0	8'-3"	7'-10"	6'-10"	6'-4"	6'-6"	5'-6"	5'-9"	5'-6"	5 3/4"
80.0	7'-11"	7'-6"	6'-8"	6'-2"	6'-3"	5'-5"	5'-7"	5'-4"	5 5/8"
85.0	7'-8"	7'-2"	6'-5"	6'-0"	6'-2"	5'-4"	5'-6"	5'-2"	5 1/2"
90.0	7'-5"	6'-11"	6'-3"	5'-11"	6'-0"	5'-2"	5'-5"	5'-0"	5 1/2"
95.0	7'-2"	6'-8"	6'-1"	5'-9"	5'-10"	5'-0"	5'-4"	4'-8"	5 1/2"
100.0	7'-0"	6'-6"	6'-0"	5'-8"	5'-8"	4'-10"	5'-3"	4'-6"	5 1/4"
105.0	6'-10"	6'-4"	5'-11"	5'-6"	5'-6"	4'-8"	5'-2"	4'-3"	5 1/4"
110.0	6'-8"	6'-1"	5'-9"	5'-5"	5'-5"	4'-6"	5'-1"	4'-6"	5 1/4"
115.0	6'-6"	5'-11"	5'-8"	5'-4"	5'-4"	4'-4"	5'-0"	3'-9"	5 1/8"
120.0	6'-4"	5'-10"	5'-7"	5'-3"	5'-3"	4'-2"	4'-11"	3'-8"	5"
125.0	6'-3"	5'-8"	5'-5"	5'-2"	5'-2"	4'-0"	4'-10"	3'-8"	5"
130.0	6'-1"	5'-7"	5'-4"	5'-1"	5'-0"	3'-10"	4'-9"	3'-8"	5"
135.0	6'-0"	5'-5"	5'-3"	5'-0"	4'-11"	3'-8"	4'-8"	3'-7"	5"
140.0	5'-11"	5'-4"	5'-2"	4'-11"	4'-10"	3'-6"	4'-7"	3'-7"	5"

* NOTES:

1. ABOVE INDICATED MAX. SLAT SPANS MAY BE USED AS LONG AS ANCHOR SPACING SCHEDULES ON SHEET 14 INDICATE THAT AN ANCHOR SPACING IS AVAILABLE FOR THE CORRESPONDING SLAT SPAN AND DESIGN LOAD.
2. REQUIRES SIDE RAILS FASTENED TO EXISTING STRUCTURE WITH **3/8"ø HILTI KWIK HUS BOLT ANCHOR W/ 4" MIN. E.D. & 3 1/4" MIN. EMBEDMENT OR 5/16"ø ULTRACON ANCHOR W/ 2 1/2" MIN. E.D. & 2 1/4" MIN. EMBEDMENT** INTO GROUTED CONCRETE BLOCK OR WITH 1/4"ø HEX HD. HWH SELF-DRILL 410 S.S. SCREWS AT MULLIONS CONNECTION. VALID FOR WALL MOUNTED, TRAPPED MOUNTED, AND BUILD-OUT MOUNTED.
3. MAXIMUM SLAT SPANS FOR INTERMEDIATE LOADS MAY BE DETERMINED BY LINEAR INTERPOLATION BETWEEN END VALUES.

Approved as complying with the Florida Building Code
Date 10/31/2013
NOA# 13-0530.11
Miami Dade Product Control
By

FLORIDA BUILDING CODE (High Velocity Hurricane Zone)

WALTER A. TILLIT JR. LICENSE NO. 44167 STATE OF FLORIDA PROFESSIONAL ENGINEER
SEAL/SIGNATURE/DATE

© 2013 TILTECO INC.

TILTECO INC.
TILLIT TESTING & ENGINEERING COMPANY
8355 N.W. 36th. St., Ste. 305 - VIRGINIA GARDENS, FL 33166
Phone : (305) 871-1530 , Fax : (305) 871-1531
e-mail: tilteco@aol.com
EB-0006719
WALTER A. TILLIT Jr., P.E.
FLORIDA Lic. # 44167

BERTHA ROLL-UP HURRICANE ABATEMENT W/ 58mm ER & NER SLAT

EASTERN METAL SUPPLY, INC.
(ASSA # 1)
4268 WESTROADS DRIVE
WEST PALM BEACH, FL 33407
PH (800) 432-2204 FAX (561) 841-4592

REV. No	DESCRIPTION	DATE	REV. No	DESCRIPTION	DATE
1			3		
2			4		

A.G.
DRAWN BY:

05/22/13
DATE

13-036
DRAWING No

SHEET 12 OF 27

END RETENTION SYSTEM

MAX. ANCHOR'S SPACING SCHEDULE IIa

FOR A GIVEN PRODUCT MOUNTING TYPE, W/ 3/8"Ø WEDGE-BOLT ANCHORS TO POURED CONCRETE WALL, A.S.D. DESIGN LOAD & SLAT SPAN RANGE †

WALL MOUNT

A.S.D. DESIGN LOAD RANGE (p.s.f.)	SLAT SPAN RANGE							
	0'–4' †	> 4'–5' †	> 5'–6' †	> 6'–7' †	> 7'–9' †	> 9'–12' †	> 12'–16' †	> 16'–23' †
≤ 30.0	12"	12"	12"	12"	12"	12"	10"	6"
>30–40	12"	12"	12"	12"	12"	11 1/2"	7 1/2"	4 1/2"
>40–60	12"	12"	12"	12"	12"	7 1/2"	5"	4 1/2"
>60–80	12"	12"	12"	12"	9"	5 1/2"	4 1/2"	4 1/2"
>80–105	12"	12"	12"	11"	6 1/2"	5 1/2"	6"	–
>105–120	12"	12"	12"	9"	6"	5 1/2"	6"	–
>120–140	12"	12"	11"	7 1/2"	5 1/2"	5 1/2"	–	–

BUILD-OUT MOUNT

A.S.D. DESIGN LOAD RANGE (p.s.f.)	SLAT SPAN RANGE															
	0'–4' †		> 4'–5' †		> 5'–6' †		> 6'–7' †		> 7'–9' †		> 9'–12' †		> 12'–16' †		> 16'–20' †	
	D1	D2, D3	D1	D2, D3	D1	D2, D3	D1	D2, D3	D1	D2, D3	D1	D2, D3	D1	D2, D3	D1	D2, D3
≤ 30.0	5"	5"	5"	5"	5"	5"	5"	5"	5"	5"	5"	5"	5"	–	4 1/2"	–
>30–40	5"	5"	5"	5"	5"	5"	5"	5"	5"	5"	5"	5"	5"	–	4 1/2"	–
>40–60	5"	5"	5"	5"	5"	5"	5"	5"	5"	5"	5"	5"	4 1/2"	–	–	–
>60–80	5"	5"	5"	5"	5"	5"	5"	5"	5"	5"	5"	–	–	–	–	–
>80–105	5"	5"	5"	5"	5"	5"	5"	5"	5"	5"	5"	–	–	–	–	–
>105–120	5"	5"	5"	5"	5"	5"	5"	5"	5"	5"	5"	–	–	–	–	–
>120–140	5"	5"	5"	5"	5"	5"	5"	5"	5"	5"	5"	–	–	–	–	–

TRAPPED MOUNT

A.S.D. DESIGN LOAD RANGE (p.s.f.)	SLAT SPAN RANGE							
	0'–4' †	> 4'–5' †	> 5'–6' †	> 6'–7' †	> 7'–9' †	> 9'–12' †	> 12'–16' †	> 16'–23'
≤ 30.0	6"	6"	6"	6"	6"	6"	6"	6"
>30–40	6"	6"	6"	6"	6"	6"	6"	6"
>40–60	6"	6"	6"	6"	6"	6"	6"	5 1/2"
>60–80	6"	6"	6"	6"	6"	6"	5 1/2"	5 1/2"
>80–105	6"	6"	6"	6"	6"	5"	5"	–
>105–120	6"	6"	6"	6"	6"	5"	5"	–
>120–140	6"	6"	6"	6"	6"	5"	–	–

SLAT SPAN DEFINITION

† NOTE:
MAX. SLAT SPAN FOR A GIVEN DESIGN LOAD SHALL NEVER EXCEED MAX. SLAT SPAN INDICATED ON SLAT PERFORMANCE CHART ON SHEET 12.

Approved as complying with the Florida Building Code
Date 10/31/2013
NOA# 13-0530.11
Miami Dade Product Control
By

MAX. ANCHOR'S SPACING SCHEDULE IIb

FOR A GIVEN PRODUCT MOUNTING TYPE, W/ 5/16"Ø ULTRACON ANCHORS TO POURED CONCRETE WALL, A.S.D. DESIGN LOAD & SLAT SPAN RANGE †

WALL MOUNT

A.S.D. DESIGN LOAD RANGE (p.s.f.)	SLAT SPAN RANGE							
	0'–4' †	> 4'–5' †	> 5'–6' †	> 6'–7' †	> 7'–9' †	> 9'–12' †	> 12'–16' †	> 16'–23' †
≤ 30.0	5"	5"	5"	5"	5"	5"	5"	5"
>30–40	5"	5"	5"	5"	5"	5"	5"	5"
>40–60	5"	5"	5"	5"	5"	5"	5"	5"
>60–80	5"	5"	5"	5"	5"	5"	5"	5"
>80–105	5"	5"	5"	5"	5"	5"	5"	5"
>105–120	5"	5"	5"	5"	5"	5"	5"	5"
>120–140	5"	5"	5"	5"	5"	5"	5"	5"

BUILD-OUT MOUNT

A.S.D. DESIGN LOAD RANGE (p.s.f.)	SLAT SPAN RANGE															
	0'–4' †		> 4'–5' †		> 5'–6' †		> 6'–7' †		> 7'–9' †		> 9'–12' †		> 12'–16' †		> 16'–20' †	
	D1	D2, D3	D1	D2, D3	D1	D2, D3	D1	D2, D3	D1	D2, D3	D1	D2, D3	D1	D2, D3	D1	D2, D3
≤ 30.0	3 1/2"	3 1/2"	3 1/2"	3 1/2"	3 1/2"	3 1/2"	3 1/2"	3 1/2"	3 1/2"	3 1/2"	3 1/2"	3 1/2"	–	–	–	–
>30–40	3 1/2"	3 1/2"	3 1/2"	3 1/2"	3 1/2"	3 1/2"	3 1/2"	3 1/2"	3 1/2"	3 1/2"	–	–	–	–	–	–
>40–60	3 1/2"	3 1/2"	3 1/2"	3 1/2"	3 1/2"	3 1/2"	3 1/2"	3 1/2"	3 1/2"	–	–	–	–	–	–	–
>60–80	3 1/2"	3 1/2"	3 1/2"	3 1/2"	3 1/2"	3 1/2"	3 1/2"	3 1/2"	–	–	–	–	–	–	–	–
>80–105	3 1/2"	3 1/2"	3 1/2"	3 1/2"	3 1/2"	3 1/2"	3 1/2"	–	–	–	–	–	–	–	–	–
>105–120	3 1/2"	3 1/2"	3 1/2"	3 1/2"	3 1/2"	3 1/2"	3 1/2"	–	–	–	–	–	–	–	–	–
>120–140	3 1/2"	3 1/2"	3 1/2"	3 1/2"	3 1/2"	3 1/2"	3 1/2"	–	–	–	–	–	–	–	–	–

TRAPPED MOUNT

A.S.D. DESIGN LOAD RANGE (p.s.f.)	SLAT SPAN RANGE							
	0'–4' †	> 4'–5' †	> 5'–6' †	> 6'–7' †	> 7'–9' †	> 9'–12' †	> 12'–16' †	> 16'–23'
≤ 30.0	5"	5"	5"	5"	5"	5"	5"	–
>30–40	5"	5"	5"	5"	5"	5"	5"	–
>40–60	5"	5"	5"	5"	5"	5"	–	–
>60–80	5"	5"	5"	5"	5"	5"	–	–
>80–105	5"	5"	5"	5"	5"	5"	–	–
>105–120	5"	5"	5"	5"	5"	5"	–	–
>120–140	5"	5"	5"	5"	5"	5"	–	–

FLORIDA BUILDING CODE (High Velocity Hurricane Zone)

WALTER A. TILLIT JR. LICENSE No. 44167 STATE OF FLORIDA PROFESSIONAL ENGINEER
P.E. SEAL/SIGNATURE/DATE

© 2013 TILTECO INC.

TILTECO INC.
TILLIT TESTING & ENGINEERING COMPANY
6355 N.W. 36th. St., Ste. 305 – VIRGINIA GARDENS, FL 33166
Phone : (305) 871-1530 , Fax : (305) 871-1531
e-mail: tilteco@aol.com
EB-0006719
WALTER A. TILLIT Jr., P.E.
FLORIDA Lic. # 44167

BERTHA ROLL-UP HURRICANE ABATEMENT
W/ 58mm ER & NER SLAT

EASTERN METAL SUPPLY, INC.
(ASSA # 1)
4268 WESTROADS DRIVE
WEST PALM BEACH, FL 33407
PH (800) 432-2204 FAX (561) 841-4592

REV. No	DESCRIPTION	DATE	REV. No	DESCRIPTION	DATE
1			3		
2			4		

A.G.
DRAWN BY:

05/22/13
DATE

13-036
DRAWING No

SHEET 13 OF 27

END RETENTION SYSTEM

MAX. ANCHOR'S SPACING SCHEDULE IIIa

FOR A GIVEN PRODUCT MOUNTING TYPE, W/ 3/8"Ø HILTI KWIK HUS BOLT ANCHORS TO GROUTED CONCRETE BLOCK WALL , A.S.D. DESIGN LOAD & SLAT SPAN RANGE

WALL MOUNT

A.S.D. DESIGN LOAD RANGE (p.s.f.)	SLAT SPAN RANGE							
	0'–4' †	> 4'–5' †	> 5'–6' †	> 6'–7' †	> 7'–9' †	> 9'–12' †	> 12'–16' †	> 16'–23' †
≤ 30.0	12"	12"	12"	12"	12"	8"	6"	–
>30–40	12"	12"	12"	12"	10 1/2"	6"	6"	–
>40–60	12"	12"	12"	12"	6 1/2"	6"	6"	–
>60–80	12"	12"	12"	8"	6"	6"	–	–
>80–105	12"	12"	8 1/2"	6"	6"	–	–	–
>105–120	12"	12"	7"	6"	–	–	–	–
>120–140	12"	11"	6"	6"	–	–	–	–

BUILD-OUT MOUNT

A.S.D. DESIGN LOAD RANGE (p.s.f.)	SLAT SPAN RANGE															
	0'–4' †		> 4'–5' †		> 5'–6' †		> 6'–7' †		> 7'–9' †		> 9'–12' †		> 12'–16' †		> 16'–20' †	
	D1	D2, D3	D1	D2, D3	D1	D2, D3	D1	D2, D3	D1	D2, D3	D1	D2, D3	D1	D2, D3	D1	D2, D3
≤ 30.0	6"	6"	6"	6"	6"	6"	6"	6"	6"	6"	6"	6"	–	–	–	–
>30–40	6"	6"	6"	6"	6"	6"	6"	6"	6"	6"	6"	6"	–	–	–	–
>40–60	6"	6"	6"	6"	6"	6"	6"	6"	6"	6"	6"	6"	–	–	–	–
>60–80	6"	6"	6"	6"	6"	6"	6"	6"	6"	–	–	–	–	–	–	–
>80–105	6"	6"	6"	6"	6"	6"	6"	6"	–	–	–	–	–	–	–	–
>105–120	6"	6"	6"	6"	6"	6"	–	–	–	–	–	–	–	–	–	–
>120–140	6"	6"	6"	6"	6"	6"	–	–	–	–	–	–	–	–	–	–

TRAPPED MOUNT

A.S.D. DESIGN LOAD RANGE (p.s.f.)	SLAT SPAN RANGE							
	0'–4' †	> 4'–5' †	> 5'–6' †	> 6'–7' †	> 7'–9' †	> 9'–12' †	> 12'–16' †	> 16'–23'
≤ 30.0	6"	6"	6"	6"	6"	6"	6"	–
>30–40	6"	6"	6"	6"	6"	6"	6"	–
>40–60	6"	6"	6"	6"	6"	6"	6"	–
>60–80	6"	6"	6"	6"	6"	6"	–	–
>80–105	6"	6"	6"	6"	6"	–	–	–
>105–120	6"	6"	6"	6"	–	–	–	–
>120–140	6"	6"	6"	–	–	–	–	–

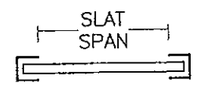

SLAT SPAN DEFINITION

† NOTE:
MAX. SLAT SPAN FOR A GIVEN DESIGN LOAD SHALL NEVER EXCEED MAX. SLAT SPAN INDICATED ON SLAT PERFORMANCE CHART ON SHEET 12.

Approved as complying with the Florida Building Code
Date 10/31/2013
NOA# 13-0530.11
Miami Dade Product Control
By

MAX. ANCHOR'S SPACING SCHEDULE IIIb

FOR A GIVEN PRODUCT MOUNTING TYPE, W/ 5/16"Ø ULTRACON ANCHORS TO GROUTED CONCRETE BLOCK WALL , A.S.D. DESIGN LOAD & SLAT SPAN RANGE †

WALL MOUNT

A.S.D. DESIGN LOAD RANGE (p.s.f.)	SLAT SPAN RANGE							
	0'–4' †	> 4'–5' †	> 5'–6' †	> 6'–7' †	> 7'–9' †	> 9'–12' †	> 12'–16' †	> 16'–23' †
≤ 30.0	5"	5"	5"	5"	5"	5"	–	–
>30–40	5"	5"	5"	5"	5"	5"	–	–
>40–60	5"	5"	5"	5"	5"	–	–	–
>60–80	5"	5"	5"	5"	–	–	–	–
>80–105	5"	5"	5"	–	–	–	–	–
>105–120	5"	5"	5"	–	–	–	–	–
>120–140	5"	5"	5"	–	–	–	–	–

BUILD-OUT MOUNT

A.S.D. DESIGN LOAD RANGE (p.s.f.)	SLAT SPAN RANGE															
	0'–4' †		> 4'–5' †		> 5'–6' †		> 6'–7' †		> 7'–9' †		> 9'–12' †		> 12'–16' †		> 16'–20' †	
	D1	D2, D3	D1	D2, D3	D1	D2, D3	D1	D2, D3	D1	D2, D3	D1	D2, D3	D1	D2, D3	D1	D2, D3
≤ 30.0	3 1/2"	3 1/2"	3 1/2"	3 1/2"	3 1/2"	3 1/2"	3 1/2"	3 1/2"	3 1/2"	3 1/2"	–	–	–	–	–	–
>30–40	3 1/2"	3 1/2"	3 1/2"	3 1/2"	3 1/2"	3 1/2"	3 1/2"	3 1/2"	–	–	–	–	–	–	–	–
>40–60	3 1/2"	3 1/2"	3 1/2"	3 1/2"	3 1/2"	3 1/2"	–	–	–	–	–	–	–	–	–	–
>60–80	3 1/2"	3 1/2"	3 1/2"	3 1/2"	3 1/2"	3 1/2"	–	–	–	–	–	–	–	–	–	–
>80–105	3 1/2"	3 1/2"	3 1/2"	3 1/2"	3 1/2"	–	–	–	–	–	–	–	–	–	–	–
>105–120	3 1/2"	3 1/2"	3 1/2"	3 1/2"	3 1/2"	–	–	–	–	–	–	–	–	–	–	–
>120–140	3 1/2"	3 1/2"	3 1/2"	3 1/2"	3 1/2"	–	–	–	–	–	–	–	–	–	–	–

TRAPPED MOUNT

A.S.D. DESIGN LOAD RANGE (p.s.f.)	SLAT SPAN RANGE							
	0'–4' †	> 4'–5' †	> 5'–6' †	> 6'–7' †	> 7'–9' †	> 9'–12' †	> 12'–16' †	> 16'–23'
≤ 30.0	5"	5"	5"	5"	5"	–	–	–
>30–40	5"	5"	5"	5"	5"	–	–	–
>40–60	5"	5"	5"	–	–	–	–	–
>60–80	5"	5"	5"	–	–	–	–	–
>80–105	5"	5"	5"	–	–	–	–	–
>105–120	5"	5"	5"	–	–	–	–	–
>120–140	5"	5"	5"	–	–	–	–	–

FLORIDA BUILDING CODE (High Velocity Hurricane Zone)

WALTER A. TILLIT JR. LICENSE No. 44167 STATE OF FLORIDA PROFESSIONAL ENGINEER
P.E. SEAL/SIGNATURE/DATE

© 2013 TILTECO INC.

TILTECO INC.
TILLIT TESTING & ENGINEERING COMPANY
6355 N.W. 36th. St., Ste. 305 – VIRGINIA GARDENS, FL 33166
Phone : (305) 871-1530 , Fax : (305) 871-1531
e-mail: tilteco@aol.com
EB-0006719
WALTER A. TILLIT Jr., P.E.
FLORIDA Lic. # 44167

BERTHA ROLL-UP HURRICANE ABATEMENT
W/ 58mm ER & NER SLAT

EASTERN METAL SUPPLY, INC.
(ASSA # 1)
4268 WESTROADS DRIVE
WEST PALM BEACH, FL 33407
PH (800) 432-2204 FAX (561) 841-4592

REV. No	DESCRIPTION	DATE	REV. No	DESCRIPTION	DATE
1			3		
2			4		

A.G.
DRAWN BY:

05/22/13
DATE

13-036
DRAWING No

SHEET 14 OF 27

SCHEDULE 1a
FLOOR TO CEILING (TRAPPED) MOUNTING

MAX. SPAN (ft) FOR END AND INTERIOR MULLIONS FOR A GIVEN A.S.D. DESIGN LOAD (psf), AND A MAX. MULLION SPACING (ft) *

A.S.D. DESIGN LOAD (p.s.f.)	MAXIMUM MULLION SPACING (ft)*	MAXIMUM MULLION SPAN (ft)							
		Ⓜ 4"x6"x1/4" MULLION				Ⓝ 4"x8"x1/4" MULLION			
		ORIENTATION #1 (▭)		ORIENTATION #2 (▯)		ORIENTATION #1 (▭)		ORIENTATION #2 (▯)	
		END	INTERIOR	END	INTERIOR	END	INTERIOR	END	INTERIOR
30	22'-10"	6' - 6"	9' - 4"	5' - 11"	11' - 6"	7' - 8"	9' - 7"	6' - 9"	12' - 0"
35	22'-10"	6' - 0"	8' - 10"	5' - 6"	10' - 11"	7' - 2"	8' - 11"	6' - 4"	12' - 0"
40	22'-10"	5' - 8"	8' - 5"	5' - 2"	10' - 5"	6' - 5"	8' - 0"	5' - 11"	12' - 0"
45	21'-0"	5' - 8"	8' - 4"	5' - 2"	10' - 4"	6' - 4"	8' - 1"	5' - 11"	12' - 0"
50	20'-0"	5' - 6"	8' - 2"	5' - 1"	9' - 10"	6' - 1"	7' - 10"	5' - 10"	12' - 0"
55	18'-0"	5' - 6"	8' - 1"	5' - 0"	9' - 5"	5' - 11"	7' - 9"	5' - 9"	12' - 0"
60	17'-9"	5' - 6"	8' - 0"	5' - 1"	9' - 3"	5' - 11"	7' - 10"	5' - 9"	12' - 0"
65	16'-10"	5' - 6"	7' - 11"	5' - 0"	9' - 0"	5' - 11"	7' - 7"	5' - 8"	12' - 0"
70	16'-0"	5' - 5"	7' - 11"	5' - 0"	8' - 7"	5' - 10"	7' - 5"	5' - 7"	12' - 0"
75	15'-0"	5' - 6"	7' - 10"	5' - 1"	8' - 7"	5' - 11"	7' - 5"	5' - 8"	12' - 0"
80	14'-6"	5' - 5"	7' - 10"	5' - 0"	8' - 6"	5' - 9"	7' - 2"	5' - 7"	12' - 0"
85	13'-6"	5' - 6"	7' - 10"	5' - 1"	8' - 7"	6' - 0"	7' - 4"	5' - 9"	12' - 0"
90	12'-6"	5' - 8"	7' - 10"	5' - 3"	8' - 9"	6' - 2"	7' - 7"	6' - 0"	12' - 0"
95	11'-6"	5' - 10"	7' - 11"	5' - 5"	9' - 0"	6' - 7"	8' - 0"	6' - 2"	12' - 0"
100	10'-6"	6' - 0"	8' - 1"	5' - 7"	9' - 4"	7' - 0"	8' - 6"	6' - 5"	12' - 0"
105	9'-6"	6' - 4"	8' - 2"	5' - 11"	9' - 10"	7' - 6"	8' - 6"	6' - 9"	12' - 0"
110	9'-5"	8' - 2"	8' - 1"	5' - 10"	9' - 6"	7' - 5"	8' - 6"	6' - 8"	12' - 0"
115	9'-4"	6' - 0"	8' - 0"	5' - 9"	9' - 2"	7' - 2"	8' - 3"	6' - 7"	12' - 0"
120	9'-3"	6' - 0"	7' - 11"	5' - 8"	8' - 10"	6' - 11"	7' - 10"	6' - 6"	12' - 0"
125	9'-0"	6' - 0"	7' - 10"	5' - 8"	8' - 9"	6' - 11"	7' - 8"	6' - 6"	12' - 0"
130	8'-10"	6' - 0"	7' - 10"	5' - 7"	8' - 7"	6' - 10"	7' - 6"	6' - 5"	12' - 0"
135	8'-9"	6' - 0"	7' - 9"	5' - 6"	8' - 4"	6' - 8"	7' - 2"	6' - 4"	11' - 10"
140	8'-6"	6' - 0"	7' - 9"	5' - 7"	8' - 3"	6' - 8"	7' - 1"	6' - 4"	11' - 10"

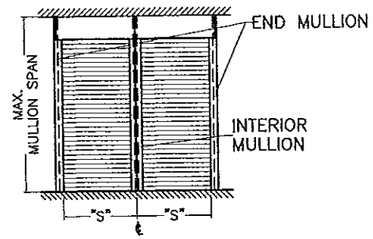

MULLION SPACING: "S"

SCHEDULE 2a
WALL MOUNTING

MAX. SPAN (ft) FOR END AND INTERIOR MULLIONS FOR A GIVEN A.S.D. DESIGN LOAD (psf), AND A MAX. MULLION SPACING (ft) *

A.S.D. DESIGN LOAD (p.s.f.)	MAXIMUM MULLION SPACING (ft)*	MAXIMUM MULLION SPAN (ft)							
		Ⓜ 4"x6"x1/4" MULLION				Ⓝ 4"x8"x1/4" MULLION			
		ORIENTATION #1 (▭)		ORIENTATION #2 (▯)		ORIENTATION #1 (▭)		ORIENTATION #2 (▯)	
		END	INTERIOR	END	INTERIOR	END	INTERIOR	END	INTERIOR
30	22'-10"	6' - 5"	9' - 3"	5' - 11"	11' - 6"	7' - 8"	9' - 7"	5' - 7"	12' - 0"
35	22'-10"	6' - 0"	8' - 10"	5' - 6"	10' - 11"	7' - 2"	8' - 11"	4' - 10"	12' - 0"
40	22'-10"	5' - 8"	8' - 5"	5' - 2"	10' - 5"	6' - 9"	8' - 5"	4' - 4"	12' - 0"
45	21'-0"	5' - 8"	8' - 4"	5' - 2"	10' - 4"	6' - 9"	8' - 8"	4' - 3"	12' - 0"
50	20'-0"	5' - 6"	8' - 2"	5' - 1"	10' - 2"	6' - 7"	8' - 8"	4' - 2"	12' - 0"
55	19'-0"	5' - 6"	8' - 1"	5' - 0"	10' - 0"	6' - 6"	8' - 8"	4' - 1"	12' - 0"
60	17'-9"	5' - 6"	8' - 0"	5' - 1"	9' - 11"	6' - 6"	8' - 7"	4' - 1"	12' - 0"
65	16'-10"	5' - 6"	7' - 11"	5' - 0"	9' - 10"	6' - 5"	8' - 6"	4' - 1"	12' - 0"
70	16'-0"	5' - 6"	7' - 10"	5' - 0"	9' - 9"	6' - 6"	8' - 5"	4' - 0"	12' - 0"
75	15'-0"	5' - 6"	7' - 10"	5' - 0"	9' - 9"	6' - 6"	8' - 5"	4' - 1"	12' - 0"
80	14'-6"	5' - 6"	7' - 9"	5' - 0"	9' - 8"	6' - 6"	8' - 4"	4' - 1"	12' - 0"
85	13'-6"	5' - 6"	7' - 10"	5' - 1"	9' - 8"	6' - 7"	8' - 4"	4' - 2"	12' - 0"
90	12'-6"	5' - 7"	7' - 10"	5' - 3"	9' - 9"	6' - 9"	8' - 5"	4' - 5"	12' - 0"
95	11'-6"	5' - 10"	7' - 11"	5' - 5"	9' - 10"	6' - 11"	8' - 5"	4' - 8"	12' - 0"
100	10'-6"	6' - 0"	8' - 0"	5' - 7"	10' - 0"	7' - 2"	8' - 6"	5' - 1"	12' - 0"
105	9'-6"	6' - 4"	8' - 2"	5' - 11"	10' - 2"	7' - 6"	8' - 6"	5' - 4"	12' - 0"
110	9'-5"	6' - 3"	8' - 1"	5' - 10"	10' - 0"	7' - 5"	8' - 6"	5' - 6"	12' - 0"
115	9'-4"	6' - 2"	8' - 0"	5' - 9"	9' - 11"	7' - 3"	8' - 5"	5' - 4"	12' - 0"
120	9'-3"	6' - 0"	7' - 11"	5' - 8"	9' - 10"	7' - 2"	8' - 5"	5' - 2"	12' - 0"
125	9'-0"	6' - 0"	7' - 10"	5' - 8"	9' - 9"	7' - 2"	8' - 5"	5' - 2"	12' - 0"
130	8'-10"	6' - 0"	7' - 10"	5' - 7"	9' - 8"	7' - 1"	8' - 4"	5' - 1"	12' - 0"
135	8'-9"	6' - 0"	7' - 9"	5' - 6"	9' - 7"	7' - 0"	8' - 4"	5' - 0"	11' - 10"
140	8'-6"	6' - 0"	7' - 9"	5' - 7"	9' - 7"	7' - 1"	8' - 4"	5' - 0"	11' - 10"

SCHEDULE 1c
FLOOR TO CEILING (TRAPPED) MOUNTING

MAX. SPAN (ft) FOR END AND INTERIOR MULLIONS FOR A GIVEN DESIGN LOAD (psf), AND A 7'-0" MAX. MULLION SPACING (ft) *

A.S.D. DESIGN LOAD (p.s.f.)	MAXIMUM MULLION SPACING (ft)*	MAXIMUM MULLION SPAN (ft)							
		Ⓜ 4"x6"x1/4" MULLION				Ⓝ 4"x8"x1/4" MULLION			
		ORIENTATION #1 (▭)		ORIENTATION #2 (▯)		ORIENTATION #1 (▭)		ORIENTATION #2 (▯)	
		END	INTERIOR	END	INTERIOR	END	INTERIOR	END	INTERIOR
30.0	7'-0"	12' - 0"	12' - 0"	12' - 0"	12' - 0"	12' - 0"	12' - 0"	12' - 0"	12' - 0"
35.0	7'-0"	12' - 0"	12' - 0"	12' - 0"	12' - 0"	12' - 0"	12' - 0"	12' - 0"	12' - 0"
40.0	7'-0"	12' - 0"	12' - 0"	12' - 0"	12' - 0"	12' - 0"	12' - 0"	12' - 0"	12' - 0"
45.0	7'-0"	12' - 0"	12' - 0"	12' - 0"	12' - 0"	12' - 0"	12' - 0"	12' - 0"	12' - 0"
50.0	7'-0"	12' - 0"	11' - 7"	12' - 0"	12' - 0"	12' - 0"	12' - 0"	12' - 0"	12' - 0"
55.0	7'-0"	12' - 0"	11' - 3"	12' - 0"	12' - 0"	12' - 0"	12' - 0"	12' - 0"	12' - 0"
60.0	7'-0"	12' - 0"	10' - 11"	12' - 0"	12' - 0"	12' - 0"	11' - 11"	12' - 0"	12' - 0"
65.0	7'-0"	12' - 0"	10' - 8"	12' - 0"	12' - 0"	12' - 0"	11' - 7"	12' - 0"	12' - 0"
70.0	7'-0"	12' - 0"	10' - 5"	11' - 8"	12' - 0"	12' - 0"	11' - 3"	12' - 0"	12' - 0"
75.0	7'-0"	12' - 0"	10' - 2"	11' - 1"	12' - 0"	12' - 0"	11' - 0"	12' - 0"	12' - 0"
80.0	7'-0"	11' - 7"	9' - 11"	10' - 7"	12' - 0"	12' - 0"	10' - 10"	11' - 6"	12' - 0"
85.0	7'-0"	11' - 1"	9' - 9"	10' - 3"	12' - 0"	12' - 0"	10' - 7"	11' - 1"	12' - 0"
90.0	7'-0"	10' - 8"	9' - 7"	9' - 11"	11' - 10"	12' - 0"	10' - 5"	10' - 9"	12' - 0"
95.0	7'-0"	10' - 3"	9' - 5"	9' - 7"	11' - 7"	12' - 0"	10' - 2"	10' - 5"	12' - 0"
100.0	7'-0"	9' - 11"	9' - 3"	9' - 4"	11' - 5"	11' - 7"	10' - 0"	10' - 2"	12' - 0"
105.0	7'-0"	9' - 7"	9' - 1"	9' - 1"	11' - 3"	11' - 3"	9' - 10"	9' - 11"	12' - 0"
110.0	7'-0"	9' - 3"	8' - 11"	8' - 11"	11' - 1"	10' - 11"	9' - 9"	9' - 8"	12' - 0"
115.0	7'-0"	9' - 0"	8' - 10"	8' - 8"	10' - 11"	10' - 7"	9' - 7"	9' - 5"	12' - 0"
120.0	7'-0"	8' - 9"	8' - 8"	8' - 5"	10' - 9"	10' - 4"	9' - 5"	9' - 3"	12' - 0"
125.0	7'-0"	8' - 7"	8' - 7"	8' - 2"	10' - 7"	10' - 1"	9' - 4"	9' - 1"	12' - 0"
130.0	7'-0"	8' - 4"	8' - 5"	8' - 0"	10' - 6"	9' - 10"	9' - 2"	8' - 11"	12' - 0"
135.0	7'-0"	8' - 2"	8' - 4"	7' - 10"	10' - 4"	9' - 7"	9' - 1"	8' - 9"	12' - 0"
140.0	7'-0"	8' - 0"	8' - 3"	7' - 7"	10' - 1"	9' - 4"	9' - 0"	8' - 7"	12' - 0"

SCHEDULE 2c
WALL MOUNTING

MAX. SPAN (ft) FOR END AND INTERIOR MULLIONS FOR A GIVEN DESIGN LOAD (psf), AND A 7'-0" MAX. MULLION SPACING (ft) *

A.S.D. DESIGN LOAD (p.s.f.)	MAXIMUM MULLION SPACING (ft)*	MAXIMUM MULLION SPAN (ft)							
		Ⓜ 4"x6"x1/4" MULLION				Ⓝ 4"x8"x1/4" MULLION			
		ORIENTATION #1 (▭)		ORIENTATION #2 (▯)		ORIENTATION #1 (▭)		ORIENTATION #2 (▯)	
		END	INTERIOR	END	INTERIOR	END	INTERIOR	END	INTERIOR
30.0	7'-0"	12' - 0"	12' - 0"	12' - 0"	12' - 0"	12' - 0"	12' - 0"	12' - 0"	12' - 0"
35.0	7'-0"	12' - 0"	12' - 0"	12' - 0"	12' - 0"	12' - 0"	12' - 0"	12' - 0"	12' - 0"
40.0	7'-0"	12' - 0"	12' - 0"	12' - 0"	12' - 0"	12' - 0"	12' - 0"	12' - 0"	12' - 0"
45.0	7'-0"	12' - 0"	12' - 0"	12' - 0"	12' - 0"	12' - 0"	12' - 0"	12' - 0"	12' - 0"
50.0	7'-0"	12' - 0"	11' - 7"	12' - 0"	12' - 0"	12' - 0"	12' - 0"	12' - 0"	12' - 0"
55.0	7'-0"	12' - 0"	11' - 3"	12' - 0"	12' - 0"	12' - 0"	12' - 0"	12' - 0"	12' - 0"
60.0	7'-0"	12' - 0"	10' - 11"	12' - 0"	12' - 0"	12' - 0"	11' - 11"	12' - 0"	12' - 0"
65.0	7'-0"	12' - 0"	10' - 8"	12' - 0"	12' - 0"	12' - 0"	11' - 7"	12' - 0"	12' - 0"
70.0	7'-0"	12' - 0"	10' - 5"	11' - 8"	12' - 0"	12' - 0"	11' - 3"	12' - 0"	12' - 0"
75.0	7'-0"	12' - 0"	10' - 2"	11' - 1"	12' - 0"	12' - 0"	11' - 0"	12' - 0"	12' - 0"
80.0	7'-0"	11' - 7"	9' - 11"	10' - 7"	12' - 0"	12' - 0"	10' - 10"	11' - 6"	12' - 0"
85.0	7'-0"	11' - 1"	9' - 9"	10' - 3"	12' - 0"	12' - 0"	10' - 7"	11' - 1"	12' - 0"
90.0	7'-0"	10' - 8"	9' - 7"	9' - 11"	11' - 10"	12' - 0"	10' - 5"	10' - 9"	12' - 0"
95.0	7'-0"	10' - 3"	9' - 5"	9' - 7"	11' - 7"	12' - 0"	10' - 2"	10' - 5"	12' - 0"
100.0	7'-0"	9' - 11"	9' - 3"	9' - 4"	11' - 5"	11' - 7"	10' - 0"	10' - 2"	12' - 0"
105.0	7'-0"	9' - 7"	9' - 1"	9' - 1"	11' - 3"	11' - 3"	9' - 10"	9' - 11"	12' - 0"
110.0	7'-0"	9' - 3"	8' - 11"	8' - 11"	11' - 1"	10' - 11"	9' - 9"	9' - 8"	12' - 0"
115.0	7'-0"	9' - 0"	8' - 10"	8' - 8"	10' - 11"	10' - 7"	9' - 7"	9' - 5"	12' - 0"
120.0	7'-0"	8' - 9"	8' - 8"	8' - 5"	10' - 9"	10' - 4"	9' - 5"	9' - 3"	12' - 0"
125.0	7'-0"	8' - 7"	8' - 7"	8' - 2"	10' - 7"	10' - 1"	9' - 4"	9' - 1"	12' - 0"
130.0	7'-0"	8' - 4"	8' - 5"	8' - 0"	10' - 6"	9' - 10"	9' - 2"	8' - 11"	12' - 0"
135.0	7'-0"	8' - 2"	8' - 4"	7' - 10"	10' - 4"	9' - 7"	9' - 1"	8' - 9"	12' - 0"
140.0	7'-0"	8' - 0"	8' - 3"	7' - 7"	10' - 3"	9' - 4"	9' - 0"	8' - 7"	12' - 0"

Approved as complying with the Florida Building Code
Date 10/31/2013
NOA# 13-0530.11
Miami Dade Product Control
By

* MAXIMUM MULLION SPACING SHALL BE SUCH THAT MAX. ALLOWABLE SLAT SPAN FOR THAT DESIGN LOAD SHALL NOT BE EXCEEDED.
† MULLION ORIENTATION IS AS SEEN FROM THE OUTSIDE (EXTERIOR) OF PRODUCT.

MULLION SCHEDULE FOR END RETENTION SYSTEM

FLORIDA BUILDING CODE (High Velocity Hurricane Zone)

WALTER A. TILLIT JR. LICENSE No. 44167 STATE OF FLORIDA PROFESSIONAL ENGINEER
P.E. SEAL/SIGNATURE/DATE

© 2013 TILTECO INC.

TILTECO INC.
TILLIT TESTING & ENGINEERING COMPANY
6355 N.W. 36th. St., Ste. 305 - VIRGINIA GARDENS, FL 33166
Phone : (305) 871-1530 , Fax : (305) 871-1531
e-mail: tilteco@aol.com
EB-0006719
WALTER A. TILLIT Jr., P.E.
FLORIDA Lic. # 44167

BERTHA ROLL-UP HURRICANE ABATEMENT
W/ 58mm ER & NER SLAT

EASTERN METAL SUPPLY, INC.
(ASSA # 1)
4268 WESTROADS DRIVE
WEST PALM BEACH, FL 33407
PH (800) 432-2204 FAX (561) 841-4592

REV. No	DESCRIPTION	DATE	REV. No	DESCRIPTION	DATE
1			3		
2			4		

A.G.
DRAWN BY:

05/22/13
DATE

13-036
DRAWING No

SHEET 15 OF 27

MULLION SCHEDULE FOR END RETENTION SYSTEM

SCHEDULE 1b
FLOOR TO CEILING (TRAPPED) MOUNTING

MAX. SPAN (ft) FOR END AND INTERIOR MULLIONS FOR A GIVEN DESIGN LOAD (psf), AND A 12'-0" MAX. MULLION SPACING (ft) *

A.S.D. DESIGN LOAD (p.s.f.)	MAXIMUM MULLION SPACING (ft)*	MAXIMUM MULLION SPAN (ft)							
		Ⓜ 4"x6"x1/4" MULLION				Ⓝ 4"x8"x1/4" MULLION			
		ORIENTATION #1 (▭)		ORIENTATION #2 (▯)		ORIENTATION #1 (▭)		ORIENTATION #2 (▯)	
		END	INTERIOR	END	INTERIOR	END	INTERIOR	END	INTERIOR
30.0	12'-0"	10' - 1"	11' - 6"	8' - 8"	12' - 0"	12' - 0"	12' - 0"	9' - 5"	12' - 0"
35.0	12'-0"	9' - 4"	10' - 11"	8' - 2"	12' - 0"	11' - 1"	11' - 11"	8' - 11"	12' - 0"
40.0	12'-0"	8' - 8"	10' - 5"	7' - 10"	12' - 0"	10' - 4"	11' - 4"	8' - 6"	12' - 0"
45.0	12'-0"	8' - 2"	10' - 1"	7' - 6"	12' - 0"	9' - 9"	10' - 11"	8' - 2"	12' - 0"
50.0	12'-0"	7' - 9"	9' - 8"	7' - 2"	12' - 0"	9' - 2"	10' - 7"	7' - 11"	12' - 0"
55.0	12'-0"	7' - 5"	9' - 5"	6' - 10"	11' - 8"	8' - 9"	10' - 3"	7' - 8"	12' - 0"
60.0	12'-0"	7' - 1"	9' - 2"	6' - 7"	11' - 4"	8' - 5"	9' - 11"	7' - 5"	12' - 0"
65.0	12'-0"	6' - 10"	8' - 11"	6' - 4"	11' - 0"	8' - 1"	9' - 8"	7' - 3"	12' - 0"
70.0	12'-0"	6' - 7"	8' - 8"	6' - 1"	10' - 9"	7' - 10"	9' - 5"	7' - 0"	12' - 0"
75.0	12'-0"	6' - 4"	8' - 6"	5' - 11"	10' - 6"	7' - 6"	9' - 3"	6' - 9"	12' - 0"
80.0	12'-0"	6' - 2"	8' - 4"	5' - 8"	10' - 3"	7' - 4"	9' - 0"	6' - 6"	12' - 0"
85.0	12'-0"	6' - 0"	8' - 2"	5' - 6"	9' - 9"	6' - 11"	8' - 10"	6' - 4"	12' - 0"
90.0	12'-0"	5' - 10"	8' - 0"	5' - 5"	9' - 2"	6' - 6"	8' - 8"	6' - 2"	12' - 0"
95.0	12'-0"	5' - 8"	7' - 10"	5' - 3"	8' - 8"	6' - 2"	8' - 6"	6' - 0"	12' - 0"
100.0	12'-0"	5' - 6"	7' - 8"	5' - 2"	8' - 3"	5' - 11"	8' - 3"	5' - 11"	11' - 9"
105.0	12'-0"	5' - 5"	7' - 7"	5' - 0"	7' - 10"	5' - 8"	7' - 10"	5' - 8"	11' - 6"
110.0	12'-0"	5' - 3"	7' - 6"	4' - 11"	7' - 6"	5' - 3"	7' - 6"	5' - 5"	11' - 3"

SCHEDULE 2b
WALL MOUNTING

MAX. SPAN (ft) FOR END AND INTERIOR MULLIONS FOR A GIVEN DESIGN LOAD (psf), AND A 12'-0" MAX. MULLION SPACING (ft) *

A.S.D. DESIGN LOAD (p.s.f.)	MAXIMUM MULLION SPACING (ft)*	MAXIMUM MULLION SPAN (ft)							
		Ⓜ 4"x6"x1/4" MULLION				Ⓝ 4"x8"x1/4" MULLION			
		ORIENTATION #1 (▭)		ORIENTATION #2 (▯)		ORIENTATION #1 (▭)		ORIENTATION #2 (▯)	
		END	INTERIOR	END	INTERIOR	END	INTERIOR	END	INTERIOR
30.0	12'-0"	8' - 8"	11' - 6"	8' - 8"	12' - 0"	12' - 0"	12' - 0"	9' - 5"	12' - 0"
35.0	12'-0"	8' - 2"	10' - 11"	8' - 2"	12' - 0"	11' - 1"	11' - 11"	8' - 11"	12' - 0"
40.0	12'-0"	7' - 10"	10' - 5"	7' - 10"	12' - 0"	10' - 4"	11' - 4"	8' - 6"	12' - 0"
45.0	12'-0"	7' - 6"	10' - 1"	7' - 6"	12' - 0"	9' - 9"	10' - 11"	8' - 2"	12' - 0"
50.0	12'-0"	7' - 2"	9' - 8"	7' - 2"	12' - 0"	9' - 2"	10' - 7"	7' - 11"	12' - 0"
55.0	12'-0"	6' - 10"	9' - 5"	6' - 10"	11' - 8"	8' - 9"	10' - 3"	7' - 8"	12' - 0"
60.0	12'-0"	6' - 7"	9' - 2"	6' - 7"	11' - 4"	8' - 5"	9' - 11"	7' - 5"	12' - 0"
65.0	12'-0"	6' - 4"	8' - 11"	6' - 4"	11' - 0"	8' - 1"	9' - 8"	7' - 3"	12' - 0"
70.0	12'-0"	6' - 1"	8' - 8"	6' - 1"	10' - 9"	7' - 10"	9' - 5"	7' - 0"	12' - 0"
75.0	12'-0"	5' - 11"	8' - 6"	5' - 11"	10' - 6"	7' - 6"	9' - 3"	5' - 7"	12' - 0"
80.0	12'-0"	5' - 8"	8' - 4"	5' - 8"	10' - 3"	7' - 4"	9' - 0"	5' - 3"	12' - 0"
85.0	12'-0"	5' - 6"	8' - 2"	5' - 6"	10' - 1"	7' - 1"	8' - 10"	4' - 11"	12' - 0"
90.0	12'-0"	5' - 5"	8' - 0"	5' - 5"	9' - 11"	6' - 11"	8' - 8"	4' - 8"	12' - 0"
95.0	12'-0"	5' - 3"	7' - 10"	5' - 3"	9' - 8"	6' - 9"	8' - 6"	4' - 5"	12' - 0"
100.0	12'-0"	5' - 2"	7' - 8"	5' - 2"	9' - 7"	6' - 7"	8' - 5"	4' - 3"	11' - 9"
105.0	12'-0"	5' - 0"	7' - 7"	5' - 0"	9' - 4"	6' - 5"	8' - 3"	4' - 0"	11' - 6"
110.0	12'-0"	4' - 11"	7' - 6"	4' - 11"	9' - 1"	6' - 3"	8' - 1"	3' - 10"	11' - 3"

SCHEDULE 1b' (LIMITED LOAD, MULLION SPACING & SPAN INSTALLATION)
FLOOR TO CEILING (TRAPPED) MOUNTING

MAX. SPAN (ft) FOR END AND INTERIOR MULLIONS FOR A GIVEN DESIGN LOAD (psf), AND FOR 12'-0" (CASE I) & 8'-0" (CASES Ia & II) MAX. MULLION SPACING (ft) *

INSTALLATION CASES	A.S.D. DESIGN LOAD (p.s.f.)	MAXIMUM MULLION SPACING (ft)*	MAXIMUM MULLION SPAN (ft)				
			Ⓜ 4"x6"x1/4" MULLION		Ⓝ 4"x8"x1/4" MULLION		
			ORIENTATION #1 (▭)	ORIENTATION #2 (▯)	ORIENTATION #1 (▭)	ORIENTATION #1 (▭)	ORIENTATION #2 (▯)
			END	INTERIOR	END	INTERIOR	INTERIOR
CASE I	30.0	12'-0"	-	12' - 0"	12' - 0"	12' - 0"	12' - 0"
	35.0	12'-0"	-	12' - 0"	11' - 1"	11' - 11"	12' - 0"
	40.0	12'-0"	-	12' - 0"	10' - 4"	11' - 4"	12' - 0"
	45.0	12'-0"	-	12' - 0"	9' - 9"	10' - 11"	12' - 0"
	50.0	12'-0"	-	12' - 0"	8' - 11"	10' - 7"	12' - 0"
	55.0	12'-0"	-	11' - 8"	8' - 2"	10' - 3"	12' - 0"
	60.0	12'-0"	-	11' - 4"	7' - 6"	9' - 11"	12' - 0"
	60.8	12'-0"	-	11' - 3"	7' - 4"	9' - 11"	12' - 0"
CASE Ia	30.0	8'-0"	-	12' - 0"	12' - 0"	12' - 0"	12' - 0"
	35.0	8'-0"	-	12' - 0"	12' - 0"	12' - 0"	12' - 0"
	40.0	8'-0"	-	12' - 0"	12' - 0"	12' - 0"	12' - 0"
	45.0	8'-0"	-	12' - 0"	12' - 0"	12' - 0"	12' - 0"
	50.0	8'-0"	-	12' - 0"	12' - 0"	12' - 0"	12' - 0"
	55.0	8'-0"	-	12' - 0"	12' - 0"	11' - 8"	12' - 0"
	60.0	8'-0"	-	12' - 0"	11' - 10"	11' - 4"	12' - 0"
	60.8	8'-0"	-	12' - 0"	11' - 9"	11' - 4"	12' - 0"
CASE II	30.0	8'-0"	-	9' - 0"	9' - 0"	9' - 0"	9' - 0"
	35.0	8'-0"	-	9' - 0"	9' - 0"	9' - 0"	9' - 0"
	40.0	8'-0"	-	9' - 0"	9' - 0"	9' - 0"	9' - 0"
	45.0	8'-0"	-	9' - 0"	9' - 0"	9' - 0"	9' - 0"
	50.0	8'-0"	-	9' - 0"	9' - 0"	9' - 0"	9' - 0"
	55.0	8'-0"	-	9' - 0"	9' - 0"	9' - 0"	9' - 0"
	60.0	8'-0"	-	9' - 0"	9' - 0"	9' - 0"	9' - 0"
	65.0	8'-0"	-	9' - 0"	9' - 0"	9' - 0"	9' - 0"
	70.0	8'-0"	-	9' - 0"	9' - 0"	9' - 0"	9' - 0"
	75.0	8'-0"	-	9' - 0"	9' - 0"	9' - 0"	9' - 0"
	80.0	8'-0"	-	9' - 0"	9' - 0"	9' - 0"	9' - 0"
	85.0	8'-0"	-	9' - 0"	8' - 6"Δ	8' - 6"Δ	9' - 0"
	90.0	8'-0"	-	9' - 0"	8' - 0"Δ	8' - 0"Δ	9' - 0"
	95.0	8'-0"	-	9' - 0"	7' - 7"Δ	7' - 7"Δ	9' - 0"
	100.0	8'-0"	-	9' - 0"	7' - 2"Δ	7' - 3"Δ	9' - 0"

Δ NOTE: USE 9'-0" SPAN IF ANCHOR CONSISTS OF HILTI, INC KWIK HUS-H SCREW, POWER FASTENERS OR WEDGE-BOLT ANCHOR IN LIEU OF HILTI KWIK BOLT TZ, SEE SCHEDULES 1 & 2 ON SHEET 8.

SCHEDULE 2b' (LIMITED LOAD, MULLION SPACING & SPAN INSTALLATION)
WALL MOUNTED

MAX. SPAN (ft) FOR END AND INTERIOR MULLIONS FOR A GIVEN DESIGN LOAD (psf), AND FOR 12'-0" (CASE I) & 8'-0" (CASE II) MAX. MULLION SPACING (ft) *

INSTALLATION CASES	A.S.D. DESIGN LOAD (p.s.f.)	MAXIMUM MULLION SPACING (ft)*	MAXIMUM MULLION SPAN (ft)				
			Ⓜ 4"x6"x1/4" MULLION		Ⓝ 4"x8"x1/4" MULLION		
			ORIENTATION #1 (▭)	ORIENTATION #2 (▯)	ORIENTATION #1 (▭)	ORIENTATION #1 (▭)	ORIENTATION #2 (▯)
			END	INTERIOR	END	INTERIOR	INTERIOR
CASE I'	30.0	12'-0"	-	12' - 0"	12' - 0"	12' - 0"	12' - 0"
	35.0	12'-0"	-	12' - 0"	11' - 1"	11' - 11"	12' - 0"
	40.0	12'-0"	-	12' - 0"	10' - 4"	11' - 4"	12' - 0"
	45.0	12'-0"	-	12' - 0"	9' - 9"	10' - 11"	12' - 0"
	50.0	12'-0"	-	12' - 0"	9' - 2"	10' - 7"	12' - 0"
	55.0	12'-0"	-	11' - 8"	7' - 3"	10' - 3"	12' - 0"
	60.0	12'-0"	-	11' - 4"	6' - 7"	9' - 11"	12' - 0"
	60.8	12'-0"	-	11' - 3"	6' - 6"	9' - 11"	12' - 0"
CASE II'	30.0	8'-0"	-	9' - 0"	9' - 0"	9' - 0"	9' - 0"
	35.0	8'-0"	-	9' - 0"	9' - 0"	9' - 0"	9' - 0"
	40.0	8'-0"	-	9' - 0"	9' - 0"	9' - 0"	9' - 0"
	45.0	8'-0"	-	9' - 0"	9' - 0"	9' - 0"	9' - 0"
	50.0	8'-0"	-	9' - 0"	9' - 0"	9' - 0"	9' - 0"
	55.0	8'-0"	-	9' - 0"	9' - 0"	9' - 0"	9' - 0"
	60.0	8'-0"	-	9' - 0"	9' - 0"	9' - 0"	9' - 0"
	65.0	8'-0"	-	9' - 0"	9' - 0"	9' - 0"	9' - 0"
	70.0	8'-0"	-	9' - 0"	9' - 0"	9' - 0"	9' - 0"
	75.0	8'-0"	-	9' - 0"	9' - 0"	9' - 0"	9' - 0"
	80.0	8'-0"	-	9' - 0"	9' - 0"	9' - 0"	9' - 0"
	85.0	8'-0"	-	9' - 0"	9' - 0"	9' - 0"	9' - 0"
	90.0	8'-0"	-	9' - 0"	9' - 0"	9' - 0"	9' - 0"
	95.0	8'-0"	-	9' - 0"	9' - 0"	9' - 0"	9' - 0"
	100.0	8'-0"	-	9' - 0"	8' - 10"	9' - 0"	9' - 0"

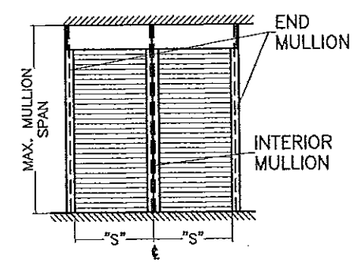

MULLION SPACING: "S"

Approved as complying with the Florida Building Code
Date 10/31/2013
NOA# 13-0530.11
Miami Dade Product Control
By

* MAXIMUM MULLION SPACING SHALL BE SUCH THAT MAX. ALLOWABLE SLAT SPAN FOR THAT DESIGN LOAD SHALL NOT BE EXCEEDED.

† MULLION ORIENTATION IS AS SEEN FROM THE OUTSIDE (EXTERIOR) OF PRODUCT.

FLORIDA BUILDING CODE (High Velocity Hurricane Zone)

WALTER A. TILLIT JR. LICENSE No. 44167 STATE OF FLORIDA PROFESSIONAL ENGINEER
P.E. SEAL/SIGNATURE/DATE

© 2013 TILTECO INC.

TILTECO INC.
TILLIT TESTING & ENGINEERING COMPANY
8355 N.W. 36th. St., Ste. 305 – VIRGINIA GARDENS, FL 33166
Phone : (305) 871-1530 , Fax : (305) 871-1531
e-mail: tilteco@aol.com
EB-0005719
WALTER A. TILLIT Jr., P.E.
FLORIDA Lic. # 44167

BERTHA ROLL-UP HURRICANE ABATEMENT
W/ 58mm ER & NER SLAT

EASTERN METAL SUPPLY, INC.
(ASSA # 1)
4268 WESTROADS DRIVE
WEST PALM BEACH, FL 33407
PH (800) 432-2204 FAX (561) 841-4592

REV. No	DESCRIPTION	DATE	REV. No	DESCRIPTION	DATE
1			3		
2			4		

A.G.
DRAWN BY:

05/22/13
DATE

13-036
DRAWING No

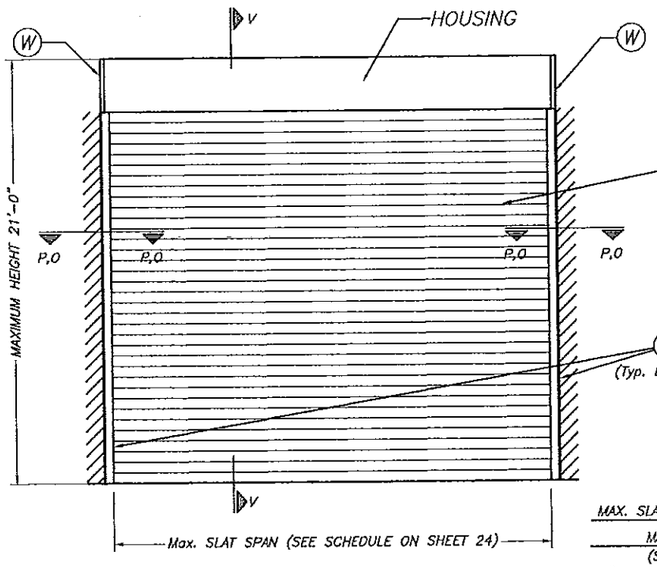

TYPICAL SINGLE UNIT ELEVATION (NO STORM BARS REQUIRED)

NOTE: SEE SHEET 2 & 3 FOR COMPONENTS NOMENCLATURE.

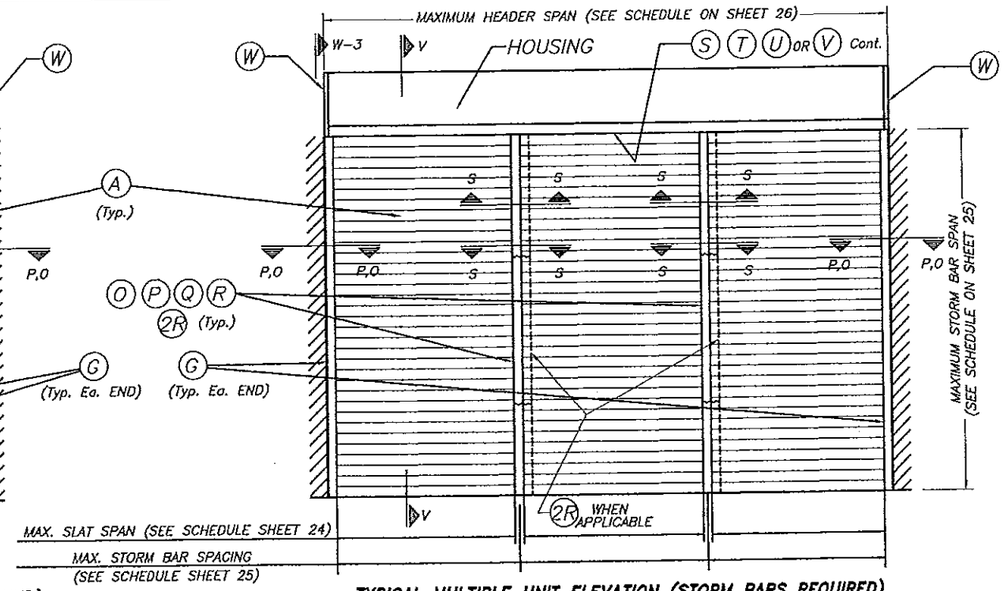

TYPICAL MULTIPLE UNIT ELEVATION (STORM BARS REQUIRED)

NOTE: SEE SHEET 2 & 3 FOR COMPONENTS NOMENCLATURE.

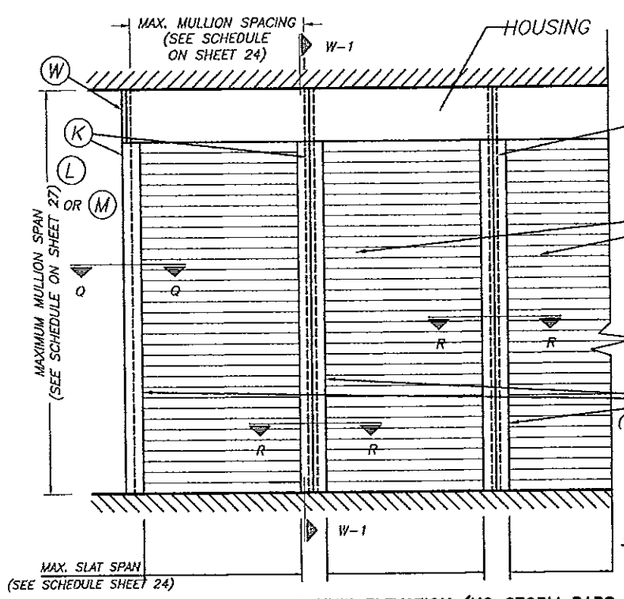

TYPICAL CONSECUTIVE SINGLE UNIT ELEVATION (NO STORM BARS REQUIRED)

NOTE: SEE SHEET 2 & 3 FOR COMPONENTS NOMENCLATURE.

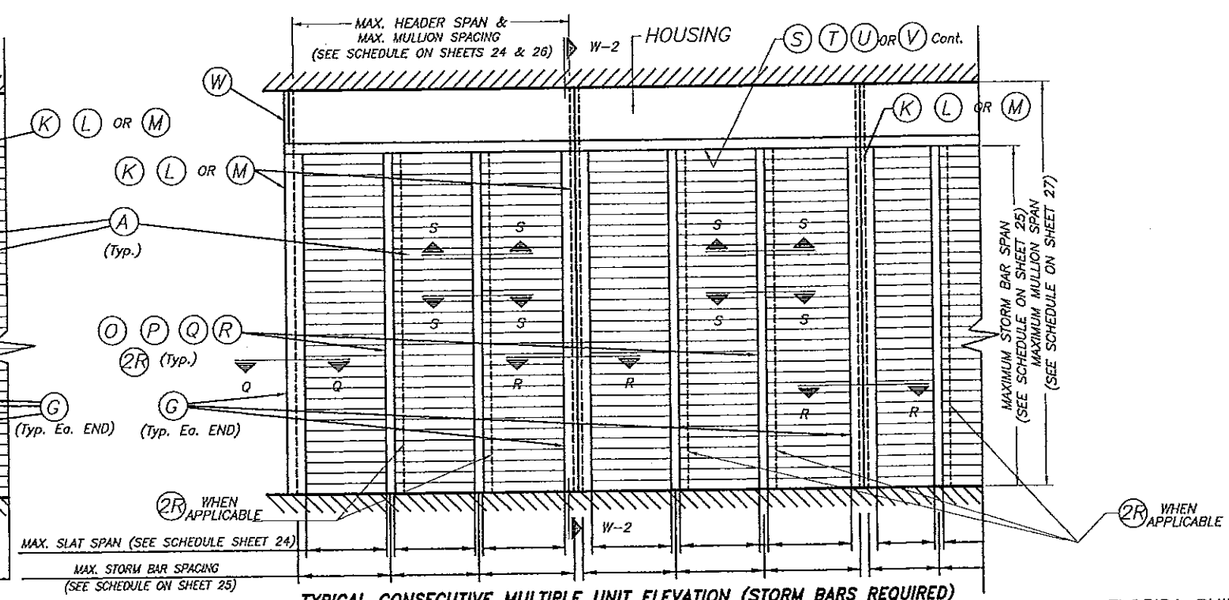

TYPICAL CONSECUTIVE MULTIPLE UNIT ELEVATION (STORM BARS REQUIRED)

NOTE: SEE SHEET 2 & 3 FOR COMPONENTS NOMENCLATURE.

Approved as complying with the Florida Building Code
Date 10/31/2013
NOA# 13-0530.11
Miami Dade Product Control
By

FLORIDA BUILDING CODE (High Velocity Hurricane Zone)

NOTE: SEE SECTIONS ON SHEETS 18 THRU 23

NON END RETENTION SYSTEM

WALTER A. TILLIT JR. LICENSE No. 44167 STATE OF FLORIDA PROFESSIONAL ENGINEER

SEAL/SIGNATURE/DATE

© 2013 TILTECO INC.

TILTECO INC.
TILLIT TESTING & ENGINEERING COMPANY
6355 N.W. 36th St., Ste. 305 – VIRGINIA GARDENS, FL 33166
Phone : (305) 871-1630 , Fax : (305) 871-1531
e-mail: tilteco@aol.com
EB-0006719
WALTER A. TILLIT Jr., P.E.
FLORIDA Lic. # 44167

BERTHA ROLL-UP HURRICANE ABATEMENT
W/ 58mm ER & NER SLAT

EASTERN METAL SUPPLY, INC.
(ASSA # 1)
4268 WESTROADS DRIVE
WEST PALM BEACH, FL 33407
PH (800) 432-2204 FAX (561) 841-4592

REV. No	DESCRIPTION	DATE	REV. No	DESCRIPTION	DATE
1			3		
2			4		

A.G.
DRAWN BY:

05/22/13
DATE

13-036
DRAWING No

SHEET 17 OF 27

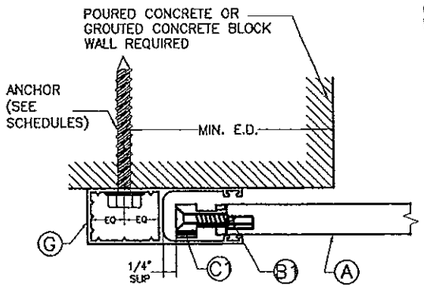

SECTION P-P (1):WALL MOUNT
SCALE: 3/8" = 1"

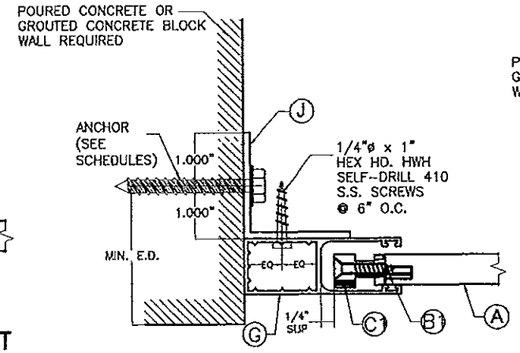

SECTION P-P (2):TRAPPED WALL MOUNT
SCALE: 3/8" = 1"

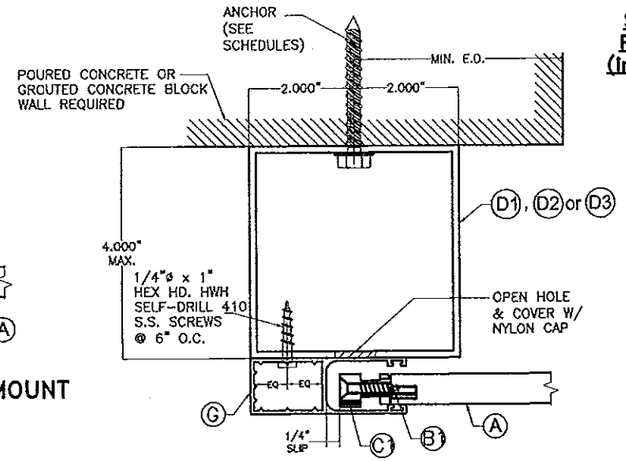

SECTION P-P (3): BUILD-OUT MOUNT
SCALE: 3/8" = 1"

SIDE RAIL ANCHOR SCHEDULE MAXIMUM A.S.D. DESIGN PRESSURE RATING (p.s.f.) AND CORRESPONDING MAXIMUM ANCHOR SPACING (in) FOR SIDE RAIL (G) CONNECTION TO POURED CONCRETE, GROUTED CONCRETE BLOCK WALL OR WOOD

(USE MAXIMUM VALUES BETWEEN POSITIVE AND NEGATIVE A.S.D. LOAD)

MAXIMUM A.S.D. PRESSURE RATING (p.s.f.)	SIDE RAIL (G)		
	WALL MOUNT	TRAPPED MOUNT	BUILD-OUT MOUNT
≤ 25 TO 40	6"	5"	5"
	6"	3"	5"
	6"	6"	6"
>40 TO 70	6"	5"	5"
	3 1/2"	3"**	4"
	6"	5"	6"
>70 TO 90	6"	5"	5"
	3"	3 1/2"	3 1/2"
	6"	4 1/2"	6"
>90 TO 140	6"	5"	5"
	3"*	3"***	3"
	6"	3 1/2"	6"

POURED CONCRETE
GROUTED CONCRETE BLOCK
WOOD

SUBSTRATE LEGEND

* VALID FOR 3'-3" MAX. SPAN
** VALID FOR 4'-5" MAX. SPAN
*** VALID FOR 3'-4" MAX. SPAN

Approved as complying with the Florida Building Code
Date 10/31/2013
NOA# 13-0530.11
Miami Dade Product Control
By

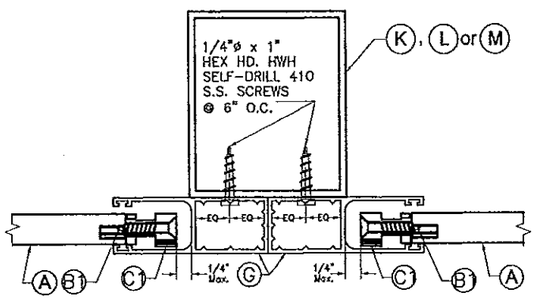

SECTION R-R :MULLION MOUNT (FACE MOUNT)
SCALE: 3/8" = 1"

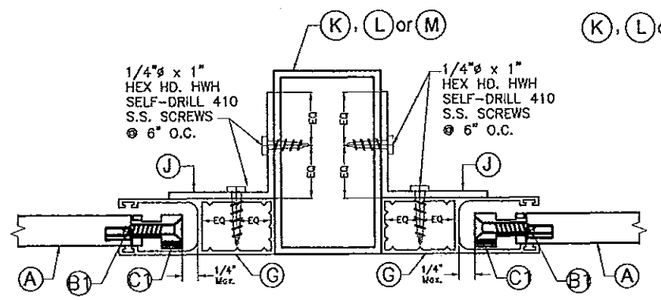

SECTION R-R:MULLION MOUNT (INSIDE MOUNT)
SCALE: 3/8" = 1"

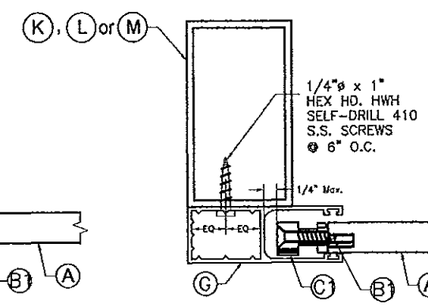

SECTION Q-Q :MULLION MOUNT (FACE MOUNT)
SCALE: 3/8" = 1"

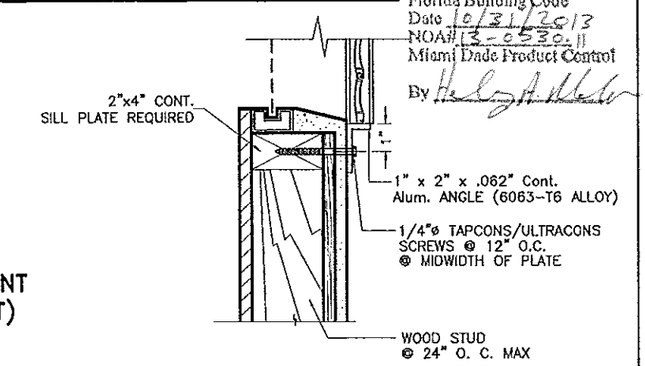

SECTION X-X
SCALE: 3/8" = 1"

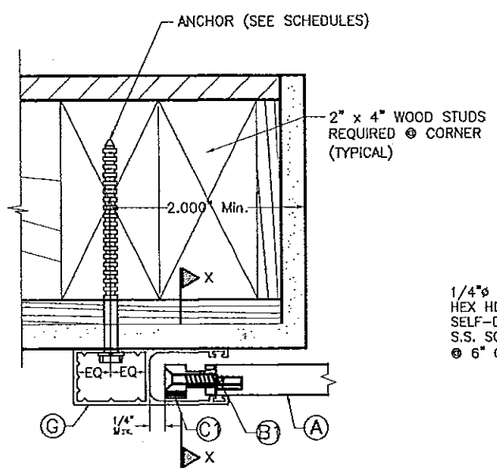

SECTION O-O: WALL MOUNT
SCALE: 3/8" = 1"

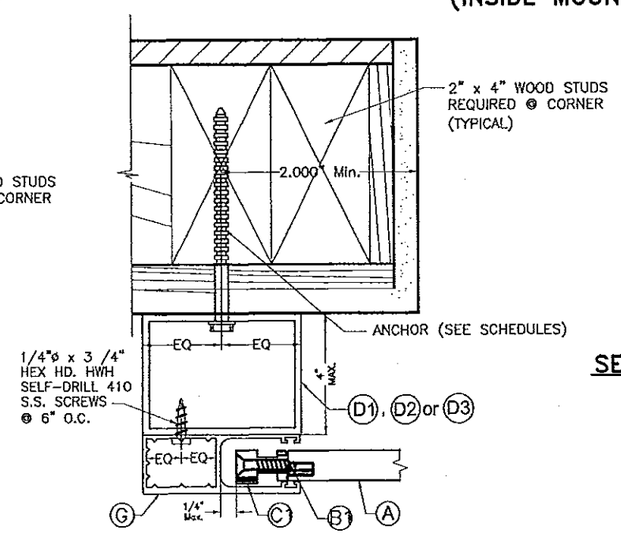

SECTION O-O: BUILD-OUT MOUNT
SCALE: 3/8" = 1"

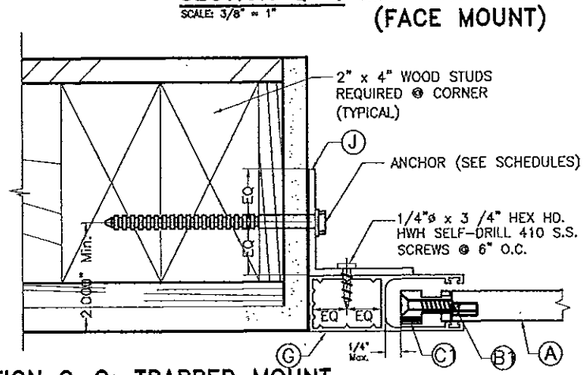

SECTION O-O: TRAPPED MOUNT
SCALE: 3/8" = 1"

SIDE RAIL TO WOOD NOTES:

1. FOR NEW FRAME CONSTRUCTION: WOOD MEMBER TO BE SOUTHERN PINE No. 2 W/ SPECIFIC DENSITY OF 0.55 OR EQUAL.
2. THIS APPROVAL INCLUDES INSTALLATION IN WOOD FOR SINGLE UNITS WITHOUT STORM BARS, MULLIONS & HEADERS AS SHOWN IN THIS SHEET.

NON END RETENTION SYSTEM

FLORIDA BUILDING CODE (High Velocity Hurricane Zone)

WALTER A. TILLIT JR. LICENSE No. 44167 STATE OF FLORIDA PROFESSIONAL ENGINEER
P.E. SEAL/SIGNATURE/DATE

© 2013 TILTECO INC.

TILTECO INC.
TILLIT TESTING & ENGINEERING COMPANY
6355 N.W. 36th. St., Ste. 305 - VIRGINIA GARDENS, FL 33166
Phone : (305) 871-1530 , Fax : (305) 871-1531
e-mail: tilteco@aol.com
EB-0006719
WALTER A. TILLIT Jr., P.E.
FLORIDA Lic. # 44167

BERTHA ROLL-UP HURRICANE ABATEMENT W/ 58mm ER & NER SLAT

EASTERN METAL SUPPLY, INC.
(ASSA # 1)
4268 WESTROADS DRIVE
WEST PALM BEACH, FL 33407
PH (800) 432-2204 FAX (561) 841-4592

REV. No	DESCRIPTION	DATE	REV. No	DESCRIPTION	DATE
1			3		
2			4		

A.G.
DRAWN BY:

05/22/13
DATE

13-036
DRAWING No

SHEET 18 OF 27

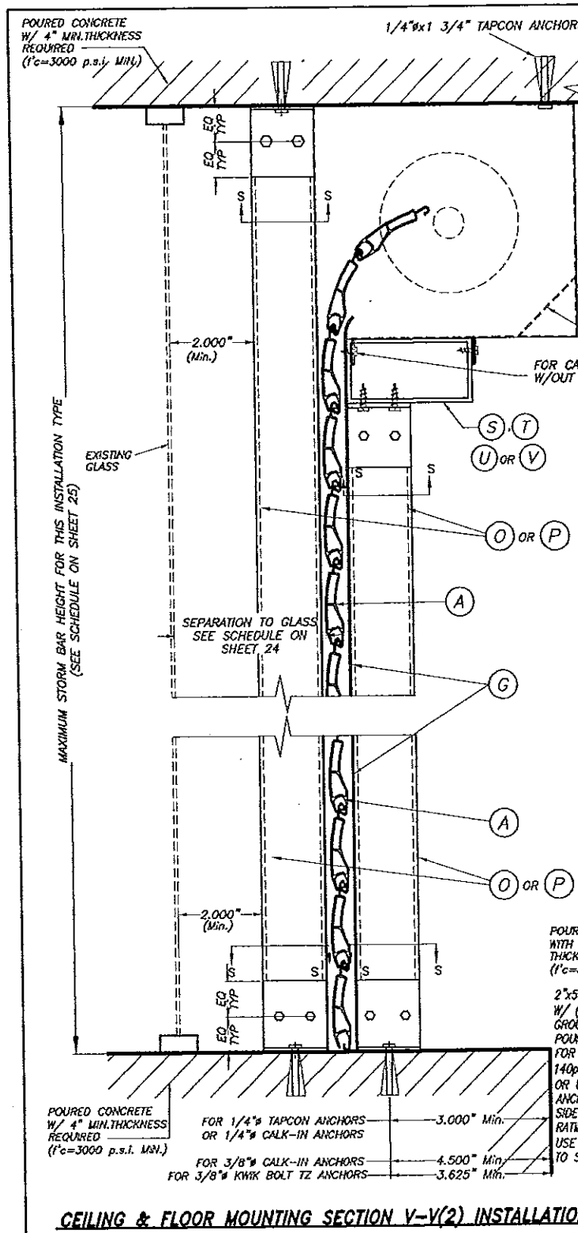

CEILING & FLOOR MOUNTING SECTION V-V(2) INSTALLATION W/ FIXED OR REMOVABLE STORM BARS W/CONCRETE ANCHORS

(SEE SECTION "S" FOR ANCHOR TYPE REQUIREMENT)

SCALE : N. T. S.

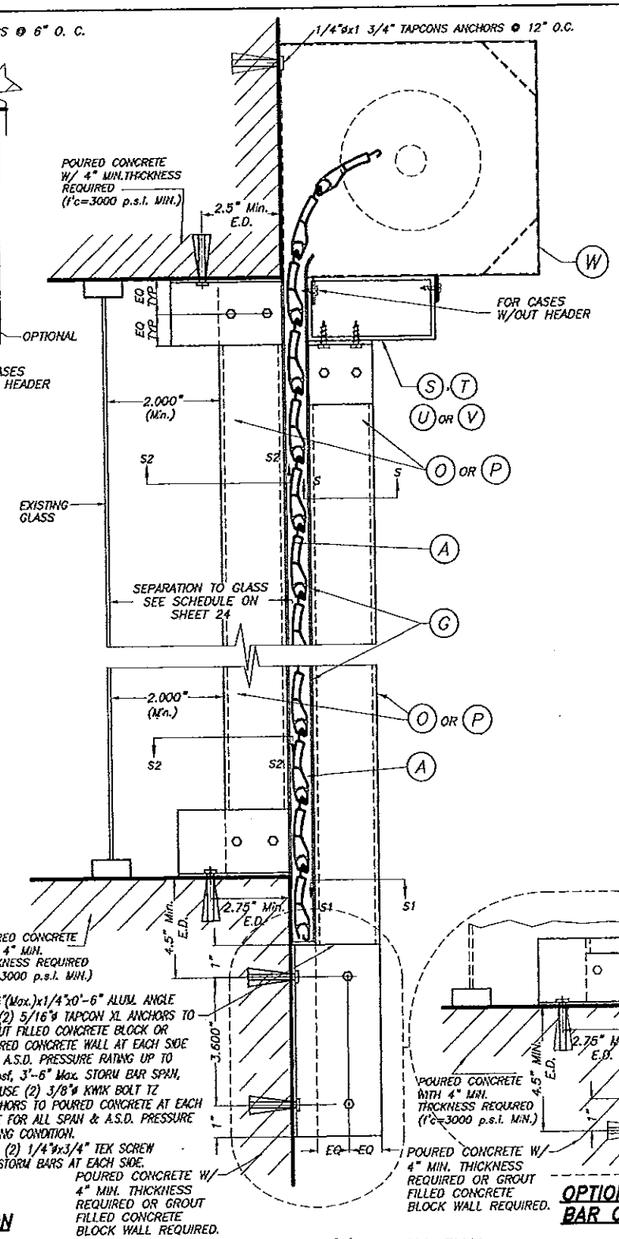

WALL MOUNTING SECTION V-V(1) INSTALLATION W/ FIXED STORM BARS W/ CONCRETE ANCHORS

SCALE : N. T. S.

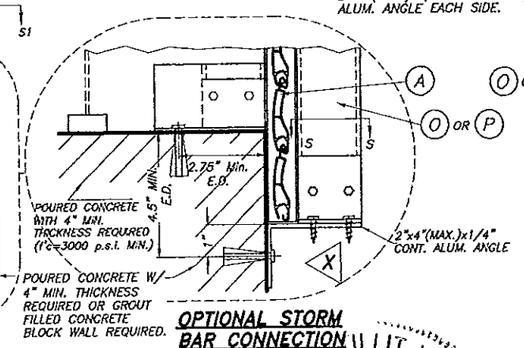

OPTIONAL STORM BAR CONNECTION

SECTION V - V

SINGLE SPAN SECTIONS AND DETAILS ARE SIMILAR TO ABOVE SHOWN WITHOUT STORM BAR & HEADERS.

NON END RETENTION SYSTEM

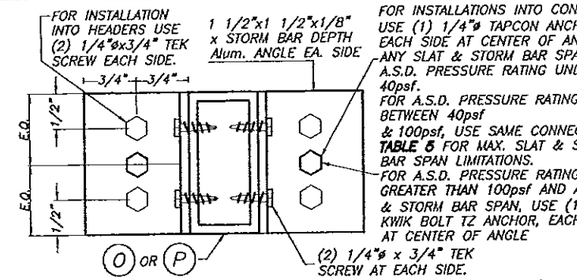

SECTION S - S (FOR FIXED STORM BAR)

SCALE : 1/2" = 1"

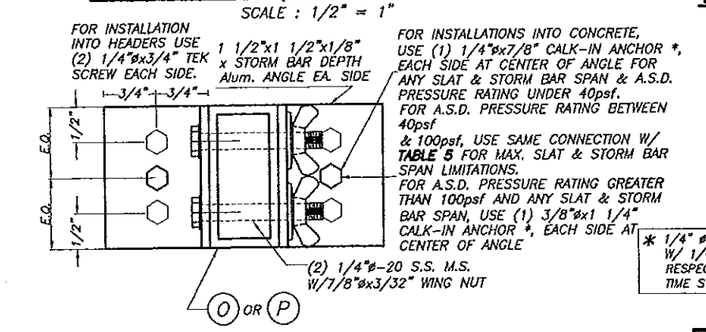

SECTION S - S (FOR REMOVABLE STORM BAR)

SCALE : 1/2" = 1"

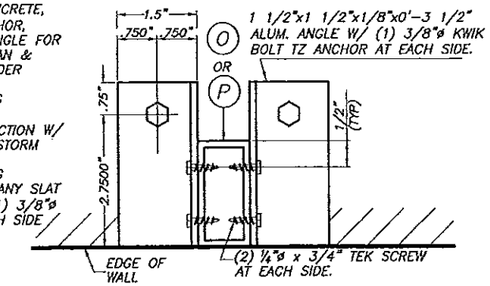

SECTION S2 - S2

SCALE : 1/4" = 1"

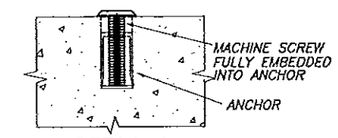

DETAIL A

N.T.S.

* 1/4" ø-20 OR 3/8" ø-16 MACHINE SCREWS USED JOINTLY W/ 1/4" ø x 7/8" OR 3/8" ø x 1 1/4" CALK-IN ANCHORS RESPECTIVELY SHALL BE LEFT TOGETHER W/ ANCHORS AT THE TIME STORM BARS ARE REMOVED. (SEE DET. A).

TABLE 5

A.S.D. PRESSURE RATING (p.s.f.)	MAX. SLAT SPAN	"L" MAX. STORM BAR SPAN
40.0	3'-0"	8'-0"
	4'-0"	7'-9"
	5'-0"	6'-11"
	6'-0"	5'-9"
50.0	3'-0"	8'-0"
	4'-0"	6'-11"
	5'-0"	5'-6"
	6'-0"	4'-7"
60.0	3'-0"	7'-4"
	4'-0"	5'-9"
	5'-0"	4'-7"
80.0	3'-0"	5'-9"
	4'-0"	4'-4"
100.0	3'-0"	4'-7"
	4'-0"	3'-5"

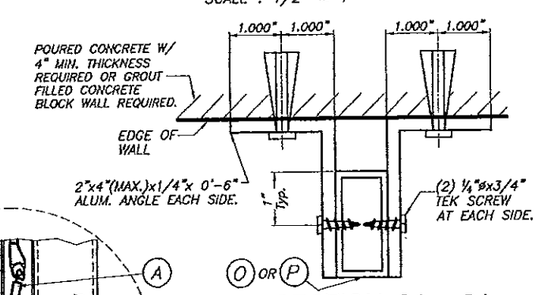

SECTION S1 - S1

SCALE : N. T. S.

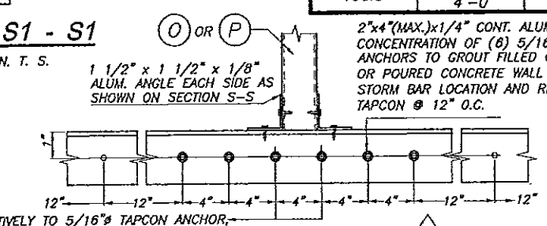

ELEVATION X

SCALE : N. T. S.

FLORIDA BUILDING CODE (High Velocity Hurricane Zone)

Approved as complying with the Florida Building Code
Date 10/31/2013
NOA# 13-0530.11
Miami Dade Product Control
By

WALTER A. TILLIT JR. LICENSE No. 44167 STATE OF FLORIDA PROFESSIONAL ENGINEER
P.E. SEAL/SIGNATURE/DATE

© 2013 TILTECO INC.

TILTECO INC.
TILLIT TESTING & ENGINEERING COMPANY
6355 N.W. 36th. St., Ste. 305 - VIRGINIA GARDENS, FL 33166
Phone : (305) 871-1530 , Fax : (305) 871-1531
e-mail: tilteco@aol.com
EB-0006719
WALTER A. TILLIT Jr., P.E.
FLORIDA Lic. # 44167

BERTHA ROLL-UP HURRICANE ABATEMENT W/ 58mm ER & NER SLAT

EASTERN METAL SUPPLY, INC.
(ASSA # 1)
4268 WESTROADS DRIVE
WEST PALM BEACH, FL 33407
PH (800) 432-2204 FAX (561) 841-4592

REV. No	DESCRIPTION	DATE	REV. No	DESCRIPTION	DATE
1			3		
2	SECTION S-S	6/3/09	4		

A.G.
DRAWN BY:

05/22/13
DATE

13-036
DRAWING No

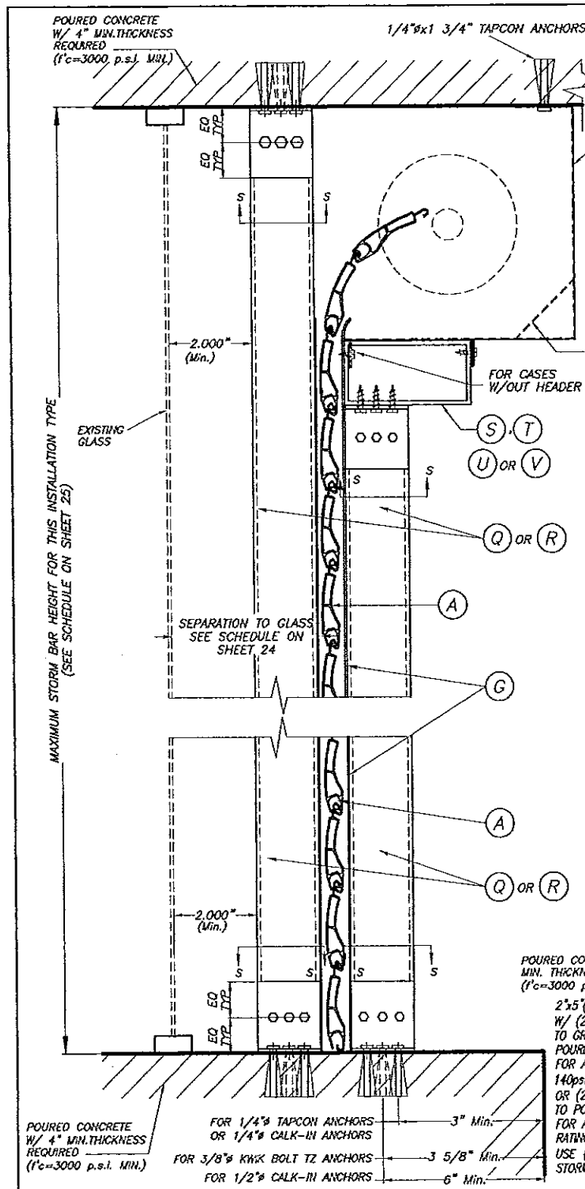

CEILING & FLOOR MOUNTING SECTION V-V(2) INSTALLATION W/ FIXED OR REMOVABLE STORM BARS W/CONCRETE ANCHORS

(SEE SECTION "S" FOR ANCHOR TYPE REQUIREMENT)

SCALE : N.T.S.

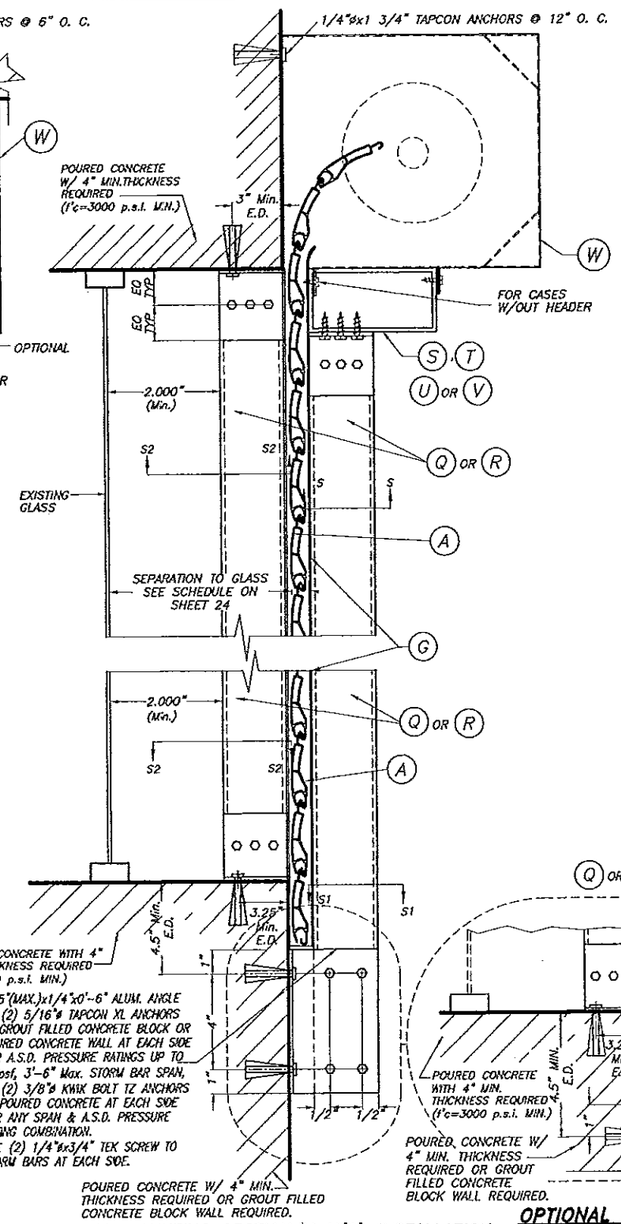

WALL MOUNTING SECTION V-V(1) INSTALLATION W/ FIXED STORM BARS W/CONCRETE ANCHORS

SCALE : N.T.S.

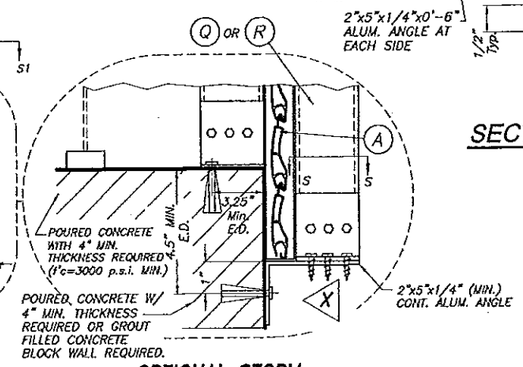

OPTIONAL STORM BAR CONNECTION

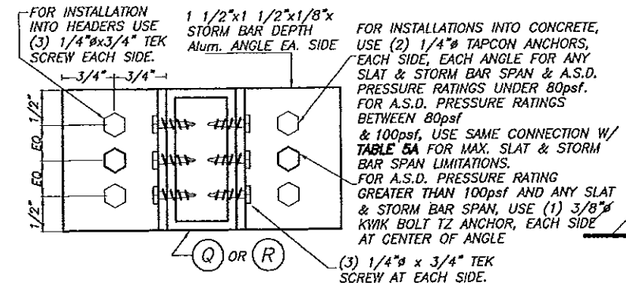

SECTION S - S (FOR FIXED STORM BAR)

SCALE : N.T.S.

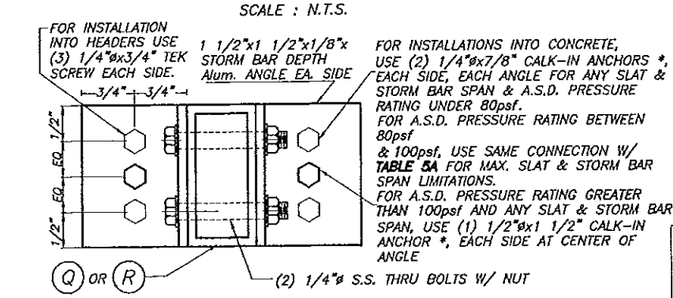

SECTION S - S (FOR REMOVABLE STORM BAR)

SCALE : N.T.S.

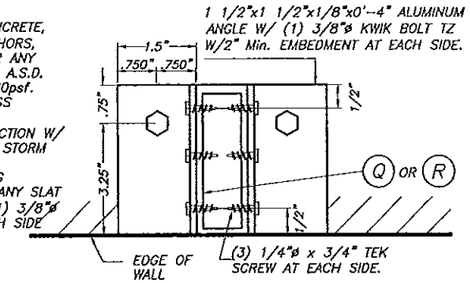

SECTION S2 - S2

SCALE : N.T.S.

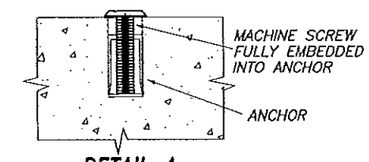

DETAIL A

SCALE : 1/2" = 1"

* 1/4"ø-20 OR 1/2"ø-13 MACHINE SCREWS USED JOINTLY W/ 1/4"øx7/8" OR 1/2"øx1 1/2" CALK-IN ANCHORS RESPECTIVELY SHALL BE LEFT TOGETHER W/ ANCHORS AT THE TIME STORM BARS ARE REMOVED. (SEE DET. A).

TABLE 5A

A.S.D. PRESSURE RATING (p.s.f.)	MAX. SLAT SPAN	"L" MAX. STORM BAR SPAN
80.0	3'-0"	9'-11"
	4'-0"	8'-8"
	5'-0"	6'-11"
100.0	3'-0"	9'-2"
	4'-0"	6'-11"
	5'-0"	5'-6"

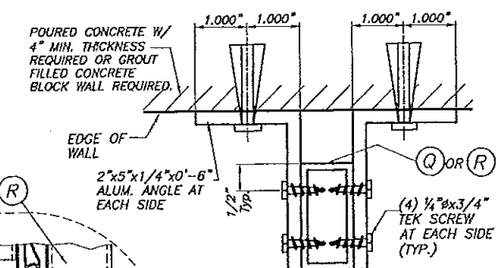

SECTION S1 - S1

SCALE : N. T. S.

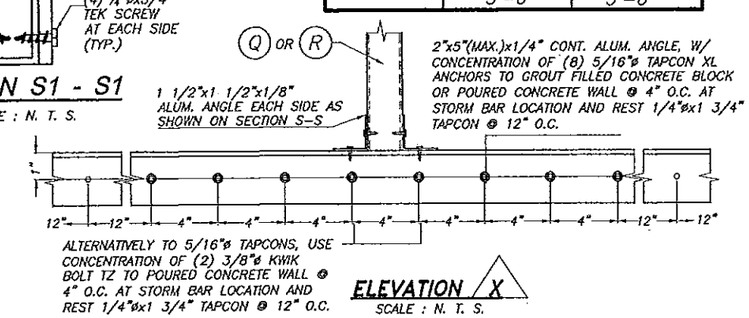

ELEVATION X

SCALE : N. T. S.

FLORIDA BUILDING CODE (High Velocity Hurricane Zone)

SECTION V - V

SINGLE SPAN SECTIONS AND DETAILS ARE SIMILAR TO ABOVE SHOWN WITHOUT STORM BAR & HEADERS.

NON END RETENTION SYSTEM

Approved as complying with the Florida Building Code
Date 10/31/2013
NOA# 13-0530.11
Miami Dade Product Control
By

WALTER A. TILLIT JR. LICENSE NO. 44167 STATE OF FLORIDA PROFESSIONAL ENGINEER

P.E. SEAL/SIGNATURE/DATE

© 2013 TILTECO INC.

TILTECO INC.
TILLIT TESTING & ENGINEERING COMPANY
6355 N.W. 36th. St., Ste. 305 - VIRGINIA GARDENS, FL 33166
Phone : (305) 871-1530 , Fax : (305) 871-1531
e-mail: tilteco@aol.com
EB-0006719
WALTER A. TILLIT Jr., P.E.
FLORIDA Lic. # 44167

BERTHA ROLL-UP HURRICANE ABATEMENT W/ 58mm ER & NER SLAT

EASTERN METAL SUPPLY, INC.
(ASSA # 1)
4268 WESTROADS DRIVE
WEST PALM BEACH, FL 33407
PH (800) 432-2204 FAX (561) 841-4592

REV. No	DESCRIPTION	DATE	REV. No	DESCRIPTION	DATE
1			3		
2	SECTION S-S	6/3/09	4		

A.G.
DRAWN BY:
05/22/13
DATE
13-036
DRAWING No
SHEET 20 OF 27

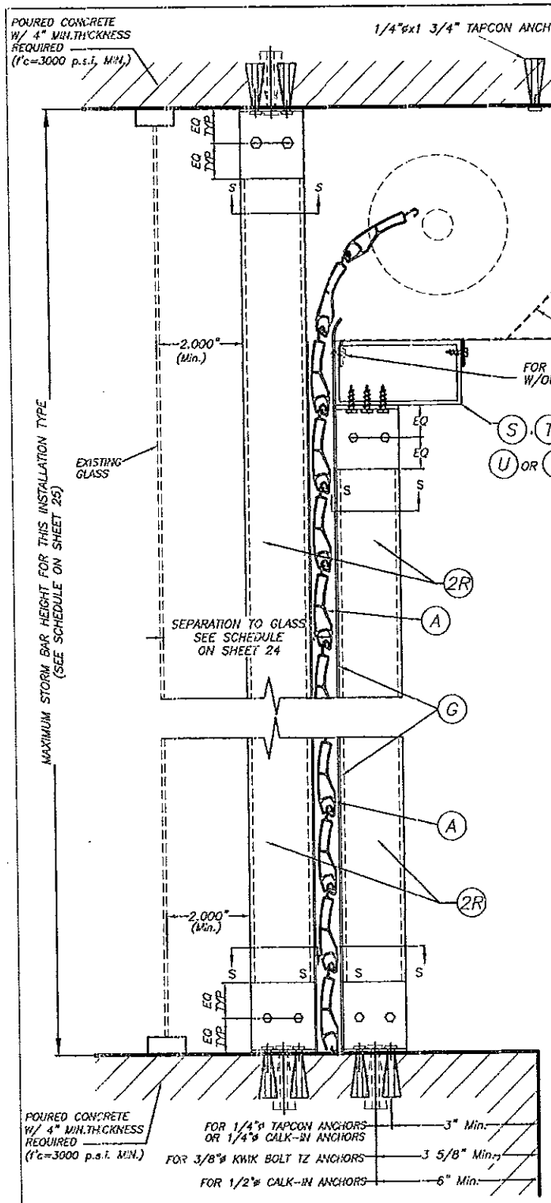

CEILING & FLOOR MOUNTING SECTION V-V(2) INSTALLATION W/ FIXED OR REMOVABLE STORM BARS W/CONCRETE ANCHORS

(SEE SECTION "S" FOR ANCHOR TYPE REQUIREMENT)

SCALE : N.T.S.

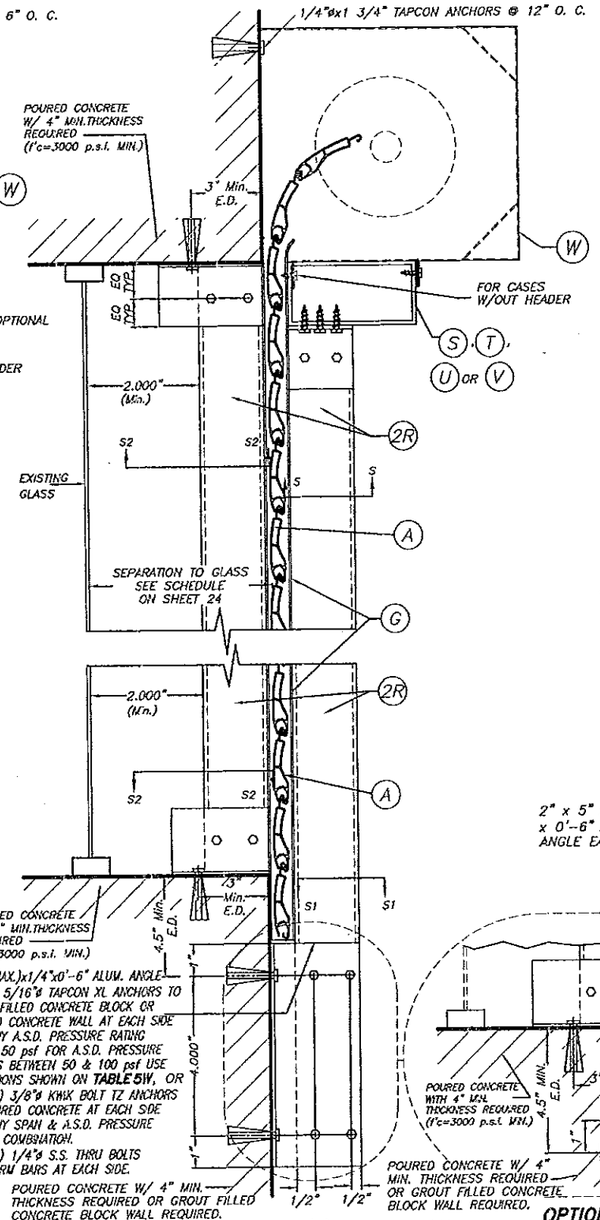

WALL MOUNTING SECTION V-V(1) INSTALLATION W/ FIXED STORM BARS W/ CONCRETE ANCHORS

SCALE : N.T.S.

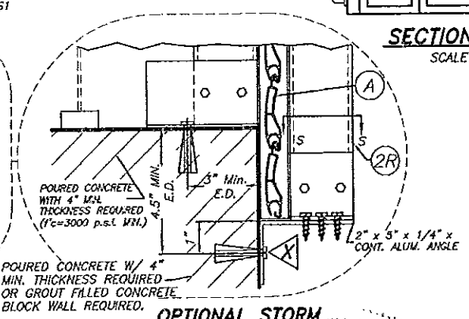

OPTIONAL STORM BAR CONNECTION

SCALE : N.T.S.

SECTION V - V

SINGLE SPAN SECTIONS AND DETAILS ARE SIMILAR TO ABOVE SHOWN WITHOUT STORM BAR & HEADERS.

NON END RETENTION SYSTEM

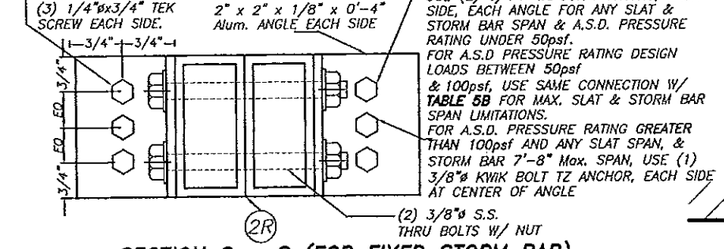

SECTION S - S (FOR FIXED STORM BAR)

SCALE : N.T.S.

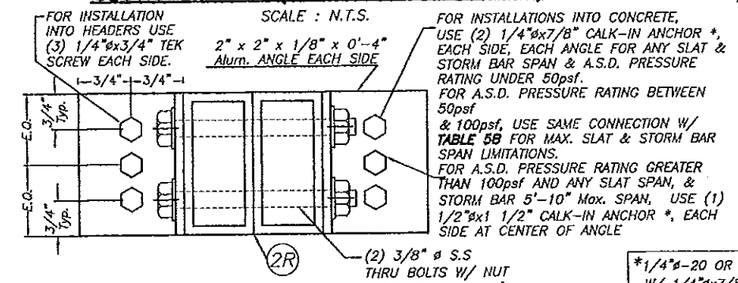

SECTION S - S (FOR REMOVABLE STORM BAR)

SCALE : N.T.S.

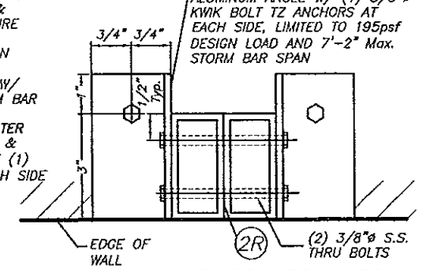

SECTION S2 - S2

SCALE : N.T.S.

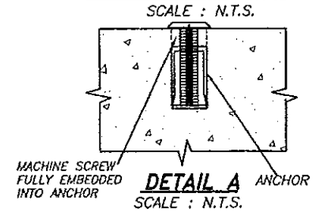

DETAIL A

SCALE : N.T.S.

*1/4"ø-20 OR 1/2"ø-13 MACHINE SCREWS USED JOINTLY W/ 1/4"øx7/8" OR 1/2"øx1 1/2" CALK-IN ANCHORS RESPECTIVELY SHALL BE LEFT TOGETHER W/ ANCHORS AT THE TIME STORM BARS ARE REMOVED. (SEE DET. A).

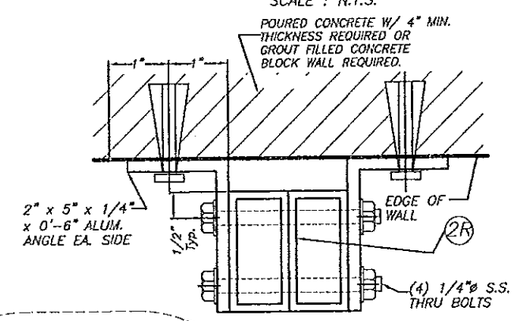

SECTION S1 - S1

SCALE : N.T.S.

TABLE 5W

A.S.D. PRESSURE RATING (p.s.f.)	MAX. SLAT SPAN	"L" MAX. STORM BAR SPAN
50.0	3'-0"	13'-4"
	4'-0"	10'-5"
	5'-0"	8'-4"
	6'-0"	6'-11"
60.0	3'-0"	11'-7"
	4'-0"	8'-8"
	5'-0"	6'-11"
80.0	3'-0"	8'-8"
	4'-0"	6'-6"
	5'-0"	5'-2"
100.0	3'-0"	6'-11"
	4'-0"	5'-2"
	5'-0"	4'-2"

TABLE 5B

A.S.D. PRESSURE RATING (p.s.f.)	MAX. SLAT SPAN	"L" MAX. STORM BAR SPAN
50.0	3'-0"	13'-4"
	4'-0"	12'-5"
	5'-0"	11'-1"
	6'-0"	9'-3"
60.0	3'-0"	12'-9"
	4'-0"	11'-7"
	5'-0"	9'-3"
80.0	3'-0"	11'-6"
	4'-0"	8'-8"
	5'-0"	6'-11"
100.0	3'-0"	9'-2"
	4'-0"	6'-11"
	5'-0"	5'-6"

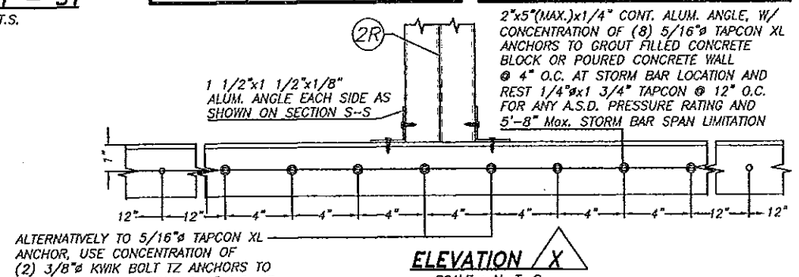

ELEVATION X

SCALE : N. T. S.

FLORIDA BUILDING CODE (High Velocity Hurricane Zone)

Approved as complying with the Florida Building Code
Date 10/31/2013
NOA# 13-0530.11
Miami Dade Product Control
By

WALTER A. TILLIT JR. LICENSE No. 44167 STATE OF FLORIDA PROFESSIONAL ENGINEER
SIG. SEAL/SIGNATURE/DATE

© 2013 TILTECO INC.

TILTECO INC.
TILLIT TESTING & ENGINEERING COMPANY
8355 N.W. 36th. St., Ste. 305 – VIRGINIA GARDENS, FL 33166
Phone : (305) 871-1530 , Fax : (305) 871-1531
e-mail: tilteco@aol.com
EB-0006719
WALTER A. TILLIT Jr., P.E.
FLORIDA Lic. # 44167

BERTHA ROLL-UP HURRICANE ABATEMENT W/ 58mm ER & NER SLAT

EASTERN METAL SUPPLY, INC.
(ASSA # 1)
4268 WESTROADS DRIVE
WEST PALM BEACH, FL 33407
PH (800) 432-2204 FAX (561) 841-4592

REV. No	DESCRIPTION	DATE	REV. No	DESCRIPTION	DATE
1			3		
2	ELEVATION X	6/3/09	4		

A.G.
DRAWN BY:

05/22/13
DATE

13-036
DRAWING No

SHEET 21 OF 27

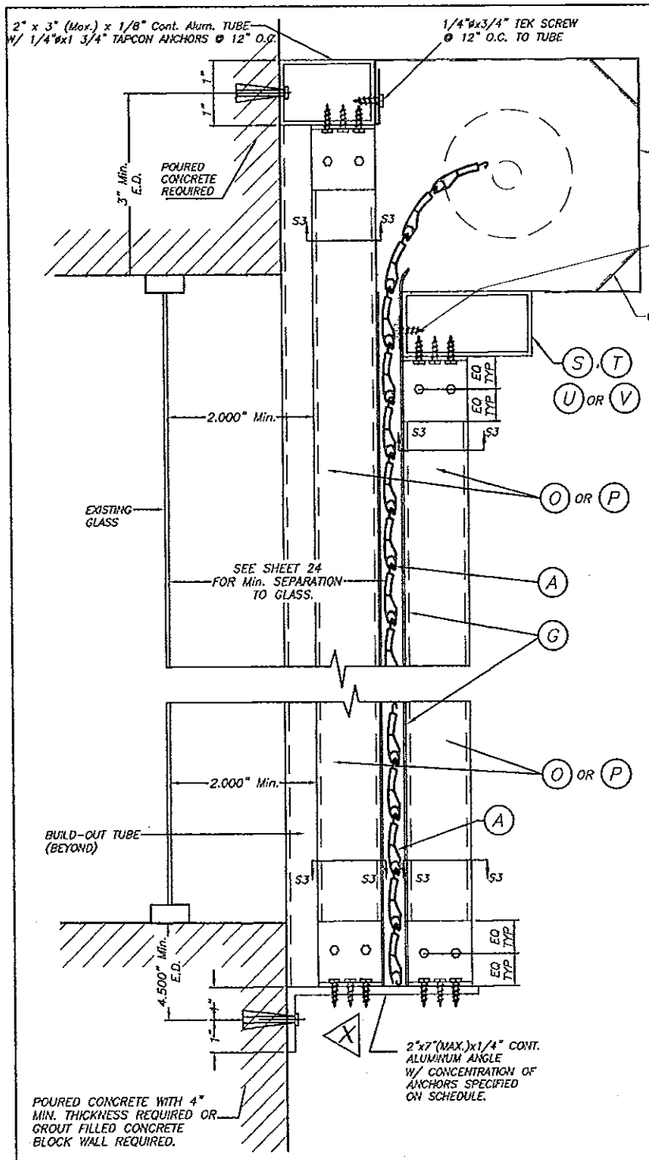

CASE I

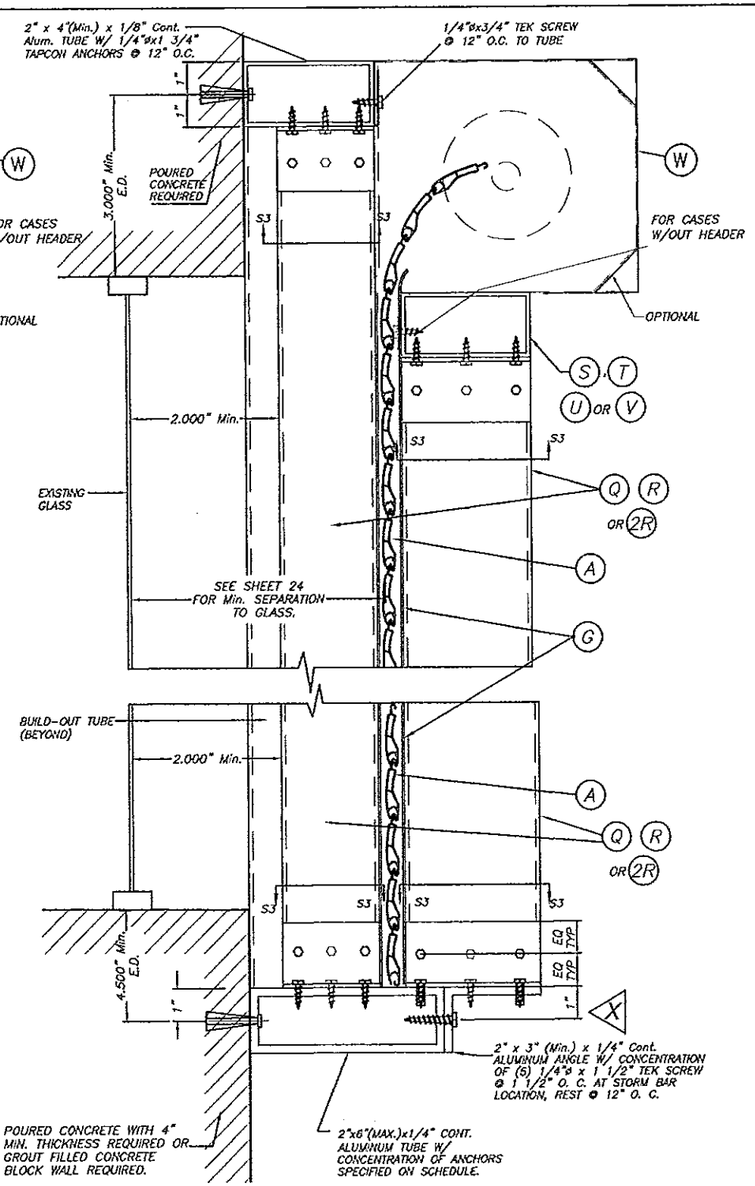

CASE II

FIXED STORM BAR CONNECTION AT BUILD-OUT INSTALLATIONS W/SHEET METAL SCREWS OR MACHINE SCREWS

SCALE : 1/4" = 1"

SECTION V – V(3)

SINGLE SPAN SECTIONS AND DETAILS ARE SIMILAR TO ABOVE SHOWN WITHOUT STORM BAR & HEADERS.

NON END RETENTION SYSTEM

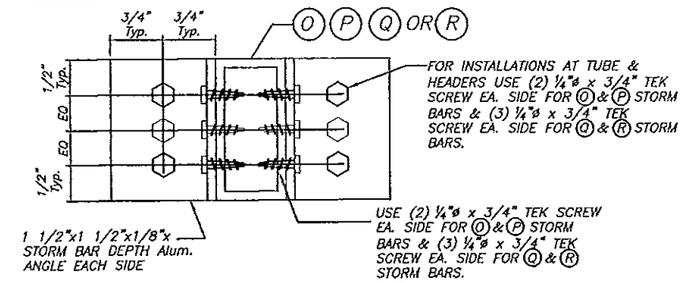

SECTION S3 – S3

SCALE : 1/2" = 1"

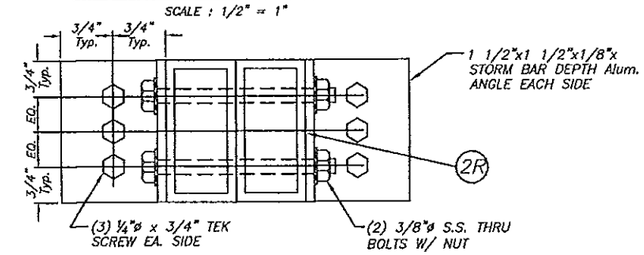

SECTION S3 – S3

SCALE : 1/2" = 1"

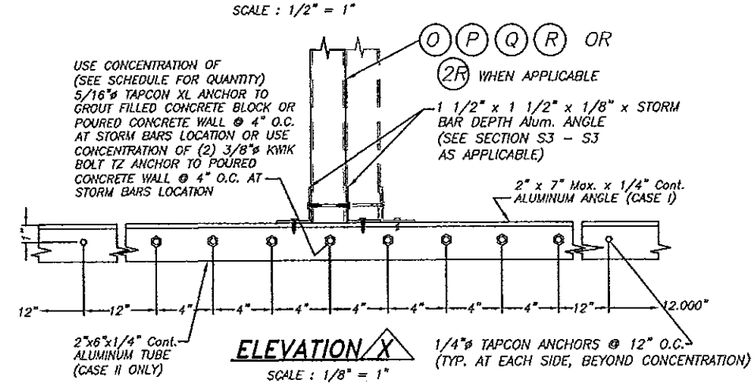

ELEVATION X

SCALE : 1/8" = 1"

ANCHORS & STORM BARS SCHEDULE FOR ELEVATION X	
ANCHOR TYPE & QUANTITY	STORM BAR TYPE
(6) 5/16" ø TAPCON XL	O P
(8) 5/16" ø TAPCON XL	Q R
(8) 5/16" ø TAPCON XL	2R *

LIMITED TO 195psf, 3'-1" SPACING & 7'-0" MAX. SPAN STORM BAR 2R

Approved as complying with the Florida Building Code
Date 10/31/2013
NOA# 13-0532.11
Miami Dade Product Control
By

FLORIDA BUILDING CODE (High Velocity Hurricane Zone)

WALTER A. TILLIT JR. LICENSE No. 44167 STATE OF FLORIDA PROFESSIONAL ENGINEER
P.E. SEAL/SIGNATURE/DATE

© 2013 TILTECO INC.

TILTECO INC.
TILLIT TESTING & ENGINEERING COMPANY
6355 N.W. 36th. St., Ste. 305 – VIRGINIA GARDENS, FL 33166
Phone : (305) 871-1530 , Fax : (305) 871-1531
e-mail: tilteco@aol.com
EB-0006719
WALTER A. TILLIT Jr., P.E.
FLORIDA Lic. # 44167

BERTHA ROLL-UP HURRICANE ABATEMENT W/ 58mm ER & NER SLAT

EASTERN METAL SUPPLY, INC.
(ASSA # 1)
4268 WESTROADS DRIVE
WEST PALM BEACH, FL 33407
PH (800) 432-2204 FAX (561) 841-4592

REV. No	DESCRIPTION	DATE	REV. No	DESCRIPTION	DATE
1			3		
2			4		

A.G.
DRAWN BY:

05/22/13
DATE

13-036
DRAWING No

SHEET 22 OF 27

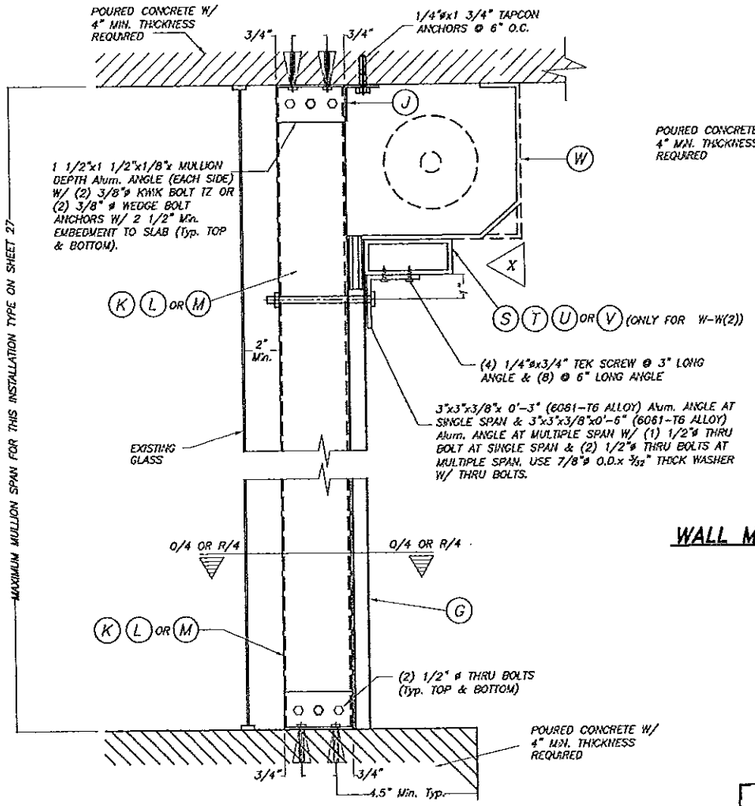

FLOOR/CEILING MOUNTING : SECTION W-W (1), W/O HEADER SECTION W-W (2), W/HEADER

SCALE : 1/8" = 1"

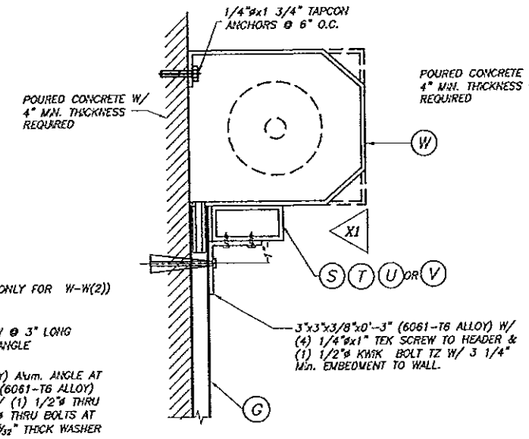

ALTERNATIVE: 1 WALL MOUNTING : SECTION W-W (3)

SCALE : 1/8" = 1"

NOTE:
THIS INSTALLATION IS ONLY VALID FOR STORM BARS WITH MAX. SPAN= 7'-0", HEADERS CON 12'-0" MAX. SINGLE SPAN & 80 p.s.f. MAXIMUM A.S.D. PRESSURE RATING, OR STORM BARS WITH MAX. SPAN = 6'-0", HEADERS WITH 15'-0" SINGLE 80 p.s.f. MAXIMUM A.S.D. PRESSURE RATING.

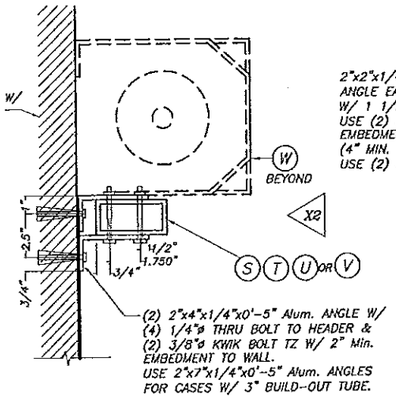

ALTERNATIVE: 2 WALL MOUNTING : SECTION W-W(3)

SCALE : 1/8" = 1"

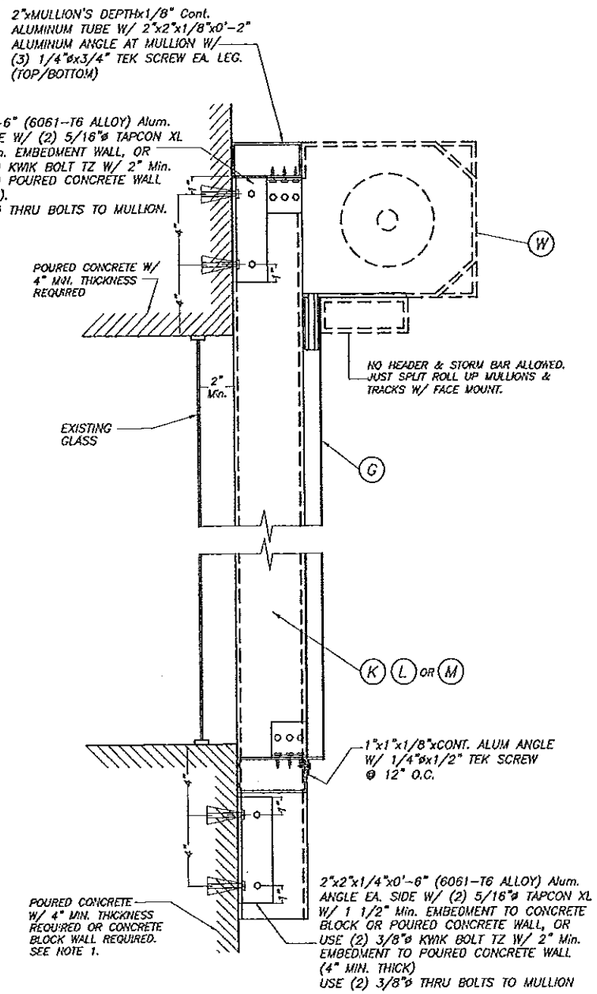

WALL MOUNTING : MULLION CONNECTION AT TOP & BOTTOM : SECTION W-W (1)

SCALE : 1/8" = 1"

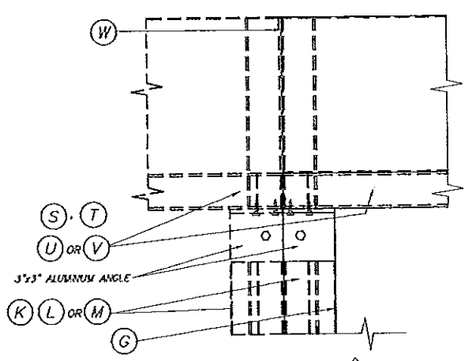

ELEVATION X

SCALE : 1/8" = 1"

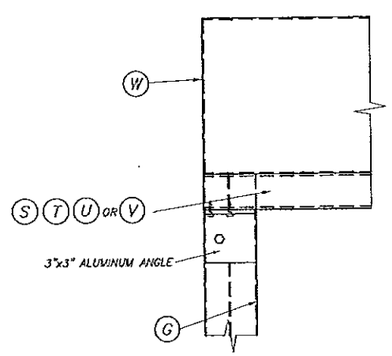

ELEVATION X1

SCALE : 1/8" = 1"

TYPICAL HEADER CONNECTION AT ENDS: SECTION W-W

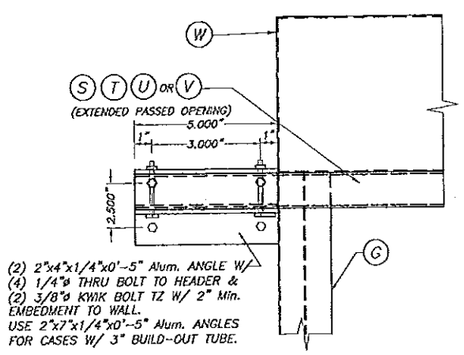

ELEVATION X2

SCALE : 1/8" = 1"

NOTE 1:
EXISTING WALL MAY CONCRETE BLOCK FOR A.S.D. PRESSURE RATING UP TO 130.0 psf W/ 4'-0" Max. MULLION SPAN AND 4'-0" Max. MULLION SPACING AND SHALL BE 4" MIN. THICK POURED CONCRETE FOR ALL GREATER MULLION SPAN AND A.S.D. PRESSURE RATING COMBINATIONS.

Approved as complying with the Florida Building Code
Date 10/31/2013
NOA# 13-0530.11
Miami Dade Product Control
By

NON END RETENTION SYSTEM

FLORIDA BUILDING CODE (High Velocity Hurricane Zone)

WALTER A. TILLIT JR. LICENSE No. 44167 STATE OF FLORIDA PROFESSIONAL ENGINEER
P.E. SEAL/SIGNATURE/DATE

© 2013 TILTECO INC.

TILTECO INC.
TILLIT TESTING & ENGINEERING COMPANY
5355 N.W. 36th. St., Ste. 305 - VIRGINIA GARDENS, FL 33166
Phone : (305) 871-1530 , Fax : (305) 871-1531
e-mail: tilteco@aol.com
EB-0006719
WALTER A. TILLIT Jr., P.E.
FLORIDA Lic. # 44167

BERTHA ROLL-UP HURRICANE ABATEMENT W/ 58mm ER & NER SLAT

EASTERN METAL SUPPLY, INC.
(ASSA # 1)
4268 WESTROADS DRIVE
WEST PALM BEACH, FL 33407
PH (800) 432-2204 FAX (561) 841-4592

REV. No	DESCRIPTION	DATE	REV. No	DESCRIPTION	DATE
1			3		
2			4		

A.G. DRAWN BY:
05/22/13 DATE
13-036 DRAWING No
SHEET 23 OF 27

SLAT PERFORMANCE CHART #1, MAXIMUM A.S.D. DESIGN PRESSURE RATING (psf) AND CORRESPONDING MAXIMUM SLAT SPAN "L" (ft)

(USE MAXIMUM VALUES BETWEEN POSITIVE AND NEGATIVE A.S.D. LOAD)

MAXIMUM A.S.D. DESIGN PRESSURE RATING (p.s.f.)	MAXIMUM SLAT SPAN "L" (ft)	MINIMUM SEPARATION TO GLASS (in)	
	SINGLE & MULTIPLE UNIT *	SINGLE & MULTIPLE UNIT **	SINGLE & MULTIPLE UNIT ***
25.0	8'-0"	6 7/16"	6 7/16"
30.0	7'-9"	6 1/2"	6 1/2"
35.0	7'-2"	6 3/8"	6 3/8"
40.0	6'-8"	6 1/4"	6 1/4"
45.0	6'-4"	5 13/16"	5 13/16"
50.0	6'-0"	5 1/2"	5 1/2"
55.0	5'-11"	5 1/2"	5 1/2"
60.0	5'-9"	5 3/8"	5 3/8"
65.0	5'-8"	5 7/16"	5 7/16"
70.0	5'-7'	5 9/16"	5 9/16"
75.0	5'-5"	5 5/16"	5 5/16"
80.0	5'-4"	5 5/16"	5 5/16"
85.0	5'-1"	4 3/4"	4 3/4"
90.0	5'-0"	4 3/4"	4 3/4"
95.0	4'-10"	4 7/16"	4 7/16"
100.0	4'-9"	4 3/8"	4 3/8"
105.0	4'-7"	4 1/4"	4 1/4"
110.0	4'-6"	4 1/4"	4 1/4"
115.0	4'-5"	4 1/4"	4 1/4"
120.0	4'-4"	4 1/4"	4 1/4"
125.0	4'-3"	4 1/4"	4 1/4"
130.0	4'-2"	4 1/4"	4 1/4"
135.0	4'-1"	4 1/4"	4 1/4"
140.0	4'-0"	3 1/8"	3 1/8"

* SPANS VALID FOR EVERY INSTALLATION LOCATED AT ANY ELEVATION OF BUILDING MEASURED AT BOTTOM OF SHUTTER. MINIMUM SEPARATION TO GLASS FOR SINGLE AND MULTIPLE UNITS SHALL BE MEASURED FROM BACK OF SLAT TO GLASS.

** MINIMUM SEPARATION TO GLASS FOR SHUTTERS INSTALLED WITHIN THE FIRST 30'-0" ELEVATION OF BUILDING AND MAXIMUM SPAN. SEE CHART #2 FOR Min. SEPARATION TO GLASS FOR SPANS LESS THAN THE Max. ALLOWED.

*** MINIMUM SEPARATION TO GLASS FOR SHUTTERS INSTALLED ABOVE 30'-0" ELEVATION OF BUILDING, MEASURED AT BOTTOM OF SHUTTER.

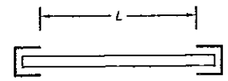

SINGLE SPAN

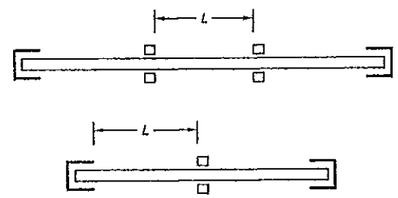

MULTIPLE SPAN

SPAN LAYOUT

SLAT PERFORMANCE CHART #2, MAXIMUM A.S.D. DESIGN PRESSURE RATING (psf) AND REQUIRED MINIMUM SEPARATION TO GLASS FOR A GIVEN SLAT SPAN "L" (ft)

(USE MAXIMUM VALUES BETWEEN POSITIVE AND NEGATIVE A.S.D. LOAD)

MAXIMUM A.S.D. DESIGN PRESSURE RATING (p.s.f.)	MAXIMUM SLAT SPAN "L" (ft)	MINIMUM SEPARATION TO GLASS (in)	
		SINGLE & MULTIPLE UNIT **	SINGLE & MULTIPLE UNIT ***
40 OR LESS	6'-0"	4 5/8"	4 5/8"
	5'-0"	4 1/4"	2 3/4"
	4'-0" OR LESS	3 1/8"	1 3/4"
>40 TO 50	6'-0"	5 1/2"	5 1/2"
	5'-0"	4 1/4"	3 3/16"
	4'-0" OR LESS	3 1/8"	2"
>50 TO 65	5'-6"	5 3/16"	5 3/16"
	5'-0"	4 1/4"	3 7/8"
	4'-0" OR LESS	3 1/8"	2 3/16"
>65 TO 80	5'-0"	4 1/2"	4 1/2"
	4'-0" OR LESS	3 1/8"	2 7/16"
>80 TO 100	5'-0"	5 3/8"	5 3/8"
	4'-0" OR LESS	3 1/8"	2 5/8"
>100 TO 120	4'-6"	4 1/4"	4 3/16"
	4'-0" OR LESS	3 1/8"	3"
>120 TO 130	4'-0"	3 1/8"	3 1/8"
	3'-0" OR LESS	3 1/8"	1 3/4"
>130 TO 140	3'-6"	3 1/8"	2 1/2"
	3'-0" OR LESS	3 1/8"	1 3/4"

NON END RETENTION SYSTEM

Approved as complying with the Florida Building Code
Date 10/31/2013
NOA# 13-0530.11
Miami Dade Product Control
By

FLORIDA BUILDING CODE (High Velocity Hurricane Zone)

WALTER A. TILLIT JR. LICENSE No. 44167 STATE OF FLORIDA PROFESSIONAL ENGINEER
P.E. SEAL/SIGNATURE/DATE

© 2013 TILTECO INC.

TILTECO INC.
TILLIT TESTING & ENGINEERING COMPANY
6355 N.W. 36th. St., Ste. 305 - VIRGINIA GARDENS, FL 33166
Phone : (305) 871-1530 , Fax : (305) 871-1531
e-mail: tilteco@aol.com
E8-0006719
WALTER A. TILLIT Jr., P.E.
FLORIDA Lic. # 44167

BERTHA ROLL-UP HURRICANE ABATEMENT W/ 58mm ER & NER SLAT

EASTERN METAL SUPPLY, INC.
(ASSA # 1)
4268 WESTROADS DRIVE
WEST PALM BEACH, FL 33407
PH (800) 432-2204 FAX (561) 841-4592

REV. No	DESCRIPTION	DATE	REV. No	DESCRIPTION	DATE
1			3		
2			4		

A.G.
DRAWN BY:

05/22/13
DATE

13-036
DRAWING No

SHEET 24 OF 27

STORM BAR LOADING CHART
MAXIMUM A.S.D. DESIGN PRESSURE RATING (p. s. f.) AND CORRESPONDING MAXIMUM SPAN "L" FOR A GIVEN TYPE OF STORM BAR AND STORM BAR SPACING.

(USE MAXIMUM VALUES BETWEEN POSITIVE AND NEGATIVE A.S.D. LOAD)

MAXIMUM A.S.D. DESIGN PRESSURE RATING (p.s.f.)	TYPE 1 STORM BAR 2" x 2" x 1/4" (O)					TYPE 2 STORM BAR 2" x 3" x 1/8" (P)					TYPE 3 STORM BAR 2" x 4" x 1/8" (Q)					TYPE 4 STORM BAR 2" x 4" x .250" (R)					TYPE 5 STORM BAR (2) 2" x 4" x .250" (2R)				
	* STORM BAR SPACING					* STORM BAR SPACING					* STORM BAR SPACING					* STORM BAR SPACING					* STORM BAR SPACING				
	≤ 3'-0"	3' TO 4'	4' TO 5'	5' TO 6'	6' TO 6.5'	≤ 3'-0"	3' TO 4'	4' TO 5'	5' TO 6'	6' TO 6.5'	≤ 3'-0"	3' TO 4'	4' TO 5'	5' TO 6'	6' TO 6.5'	≤ 3'-0"	3' TO 4'	4' TO 5'	5' TO 6'	6' TO 6.5'	≤ 3'-0"	3' TO 4'	4' TO 5'	5' TO 6'	6' TO 6.5'
40 OR LESS	7'-7"	7'-1"	6'-9"	6'-2"	5'-11"	8'-0"	7'-9"	6'-11"	6'-4"	6'-1"	10'-0"	9'-6"	8'-6"	7'-9"	7'-5"	11'-10"	11'-0"	10'-5"	9'-11"	9'-9"	14'-1"	13'-1"	12'-5"	11'-10"	11'-7"
45	7'-5"	6'-11"	6'-4"	5'-10"	5'-7"	8'-0"	7'-4"	6'-7"	6'-0"	5'-9"	9'-11"	8'-11"	8'-0"	7'-4"	7'-0"	11'-6"	10'-8"	10'-1"	9'-8"	9'-4"	13'-8"	12'-9"	12'-0"	11'-6"	11'-3"
50	7'-3"	6'-9"	6'-0"	5'-6"	5'-4"	8'-0"	7'-0"	6'-3"	5'-8"	5'-6"	9'-8"	8'-6"	7'-7"	6'-11"	6'-8"	11'-2"	10'-5"	9'-10"	9'-2"	8'-10"	13'-4"	12'-5"	11'-9"	11'-2"	11'-0"
55	7'-0"	6'-5"	5'-9"	5'-3"	—	7'-8"	6'-8"	5'-6"	5'-6"	—	9'-4"	8'-1"	7'-3"	6'-7"	—	10'-11"	10'-2"	9'-7"	8'-9"	—	13'-0"	12'-1"	11'-5"	10'-11"	—
60	6'-11"	6'-2"	5'-6"	5'-0"	—	7'-4"	6'-4"	5'-8"	5'-2"	—	8'-11"	7'-9"	6'-11"	6'-4"	—	10'-8"	9'-11"	9'-2"	8'-5"	—	12'-9"	11'-10"	11'-2"	10'-8"	—
65	6'-9"	5'-11"	5'-4"	4'-10"	—	7'-1"	6'-1"	5'-5"	5'-0"	—	8'-7"	7'-5"	6'-8"	6'-1"	—	10'-6"	9'-9"	8'-10"	8'-1"	—	12'-6"	11'-7"	11'-0"	10'-6"	—
70	6'-7"	5'-8"	5'-1"	4'-8"	—	6'-10"	5'-11"	5'-3"	4'-10"	—	8'-3"	7'-2"	6'-5"	5'-10"	—	10'-4"	9'-6"	8'-6"	7'-9"	—	12'-3"	11'-5"	10'-9"	10'-4"	—
75	6'-4"	5'-6"	4'-11"	4'-6"	—	6'-7"	5'-8"	5'-1"	4'-8"	—	8'-0"	6'-11"	6'-2"	5'-8"	—	10'-1"	9'-2"	8'-3"	7'-6"	—	12'-0"	11'-2"	10'-7"	10'-1"	—
80	6'-2"	5'-4"	4'-9"	4'-4"	—	6'-4"	5'-6"	4'-11"	4'-6"	—	7'-9"	6'-9"	6'-0"	5'-6"	—	9'-11"	8'-11"	7'-11"	7'-3"	—	11'-10"	11'-0"	10'-5"	9'-11"	—
85	6'-0"	5'-2"	4'-8"	4'-3"	—	6'-2"	5'-4"	4'-9"	4'-4"	—	7'-6"	6'-6"	5'-10"	5'-4"	—	9'-10"	8'-7"	7'-9"	7'-0"	—	11'-8"	10'-10"	10'-3"	9'-10"	—
90	5'-10"	5'-0"	4'-6"	4'-1"	—	6'-0"	5'-2"	4'-8"	4'-3"	—	7'-4"	6'-4"	5'-8"	5'-2"	—	9'-8"	8'-5"	7'-6"	6'-10"	—	11'-6"	10'-8"	10'-1"	9'-8"	—
95	5'-8"	4'-11"	4'-5"	4'-0"	—	5'-10"	5'-1"	4'-6"	4'-1"	—	7'-1"	6'-2"	5'-6"	5'-0"	—	9'-5"	8'-2"	7'-4"	6'-8"	—	11'-4"	10'-7"	10'-0"	9'-5"	—
100	5'-6"	4'-9"	4'-3"	3'-11"	—	5'-8"	4'-11"	4'-5"	4'-0"	—	6'-11"	6'-0"	5'-4"	4'-11"	—	9'-2"	7'-11"	7'-1"	6'-6"	—	11'-2"	10'-5"	9'-10"	9'-2"	—
105	5'-5"	4'-8"	4'-2"	3'-10"	—	5'-7"	4'-10"	4'-4"	3'-11"	—	6'-9"	5'-10"	5'-3"	4'-9"	—	8'-11"	7'-9"	6'-11"	6'-4"	—	11'-1"	10'-4"	9'-9"	8'-11"	—
110	5'-3"	4'-7"	4'-1"	—	—	5'-5"	4'-8"	4'-2"	—	—	6'-7"	5'-9"	5'-1"	—	—	8'-9"	7'-7"	6'-9"	—	—	10'-11"	10'-2"	9'-7"	—	—
115	5'-2"	4'-5"	4'-0"	—	—	5'-4"	4'-7"	4'-1"	—	—	6'-6"	5'-7"	5'-0"	—	—	8'-7"	7'-5"	6'-8"	—	—	10'-10"	10'-1"	9'-4"	—	—
120	5'-0"	4'-4"	3'-11"	—	—	5'-2"	4'-6"	4'-0"	—	—	6'-4"	5'-6"	4'-11"	—	—	8'-5"	7'-3"	6'-6"	—	—	10'-8"	9'-11"	9'-2"	—	—
125	4'-11"	4'-3"	3'-10"	—	—	5'-1"	4'-5"	3'-11"	—	—	6'-2"	5'-4"	4'-10"	—	—	8'-3"	7'-1"	6'-4"	—	—	10'-7"	9'-10"	9'-0"	—	—
130	4'-10"	4'-2"	3'-9"	—	—	5'-0"	4'-4"	3'-10"	—	—	6'-1"	5'-3"	4'-9"	—	—	8'-1"	7'-0"	6'-3"	—	—	10'-6"	9'-9"	8'-10"	—	—
135	4'-9"	4'-1"	3'-8"	—	—	4'-11"	4'-3"	3'-9"	—	—	6'-0"	5'-2"	4'-7"	—	—	7'-11"	6'-10"	6'-1"	—	—	10'-5"	9'-8"	8'-8"	—	—
140	4'-8"	4'-0"	3'-7"	—	—	4'-10"	4'-2"	3'-9"	—	—	5'-10"	5'-1"	4'-6"	—	—	7'-9"	6'-9"	6'-0"	—	—	10'-4"	9'-6"	8'-6"	—	—

* STORM BAR SPACING SHALL BE SUCH THAT MAXIMUM SLAT SPAN SHALL NOT BE EXCEEDED.

NON END RETENTION SYSTEM

Approved as complying with the
Florida Building Code
Date 10/31/2013
NOA# 13-0530.11
Miami Dade Product Control
By

FLORIDA BUILDING CODE (High Velocity Hurricane Zone)

WALTER A. TILLIT JR. LICENSE No. 44167 STATE OF FLORIDA PROFESSIONAL ENGINEER
P.E. SEAL/SIGNATURE/DATE

© 2013 TILTECO INC.

TILTECO INC.
TILLIT TESTING & ENGINEERING COMPANY
6355 N.W. 36th. St., Ste. 305 - VIRGINIA GARDENS, FL 33166
Phone : (305) 871-1530 , Fax : (305) 871-1531
e-mail: tilteco@aol.com
EB-0006719
WALTER A. TILLIT Jr., P.E.
FLORIDA Lic. # 44167

BERTHA ROLL-UP HURRICANE ABATEMENT
W/ 58mm ER & NER SLAT

EASTERN METAL SUPPLY, INC.
(ASSA # 1)
4268 WESTROADS DRIVE
WEST PALM BEACH, FL 33407
PH (800) 432-2204 FAX (561) 841-4592

REV. No	DESCRIPTION	DATE	REV. No	DESCRIPTION	DATE
1			3		
2			4		

A.G.
DRAWN BY:

05/22/13
DATE

13-036
DRAWING No

HEADER LOADING CHART MAXIMUM A.S.D. DESIGN PRESSURE RATING (psf) AND CORRESPONDING MAXIMUM SPAN "L" FOR A GIVEN TYPE OF HEADER.

(USE MAXIMUM VALUES BETWEEN POSITIVE AND NEGATIVE A.S.D. LOAD)

MAXIMUM A.S.D. DESIGN PRESSURE RATING (p.s.f.)	TYPE 1 HEADER (S) 2" x 3" x 1/8"		TYPE 2 HEADER (T) 2" x 4" x 1/8"			TYPE 3 HEADER (U) 2" x 4" x 1/4"					TYPE 4 HEADER (V) 2" x 6" x 1/8"				
	STORM BAR HEIGHT		STORM BAR HEIGHT			STORM BAR HEIGHT					STORM BAR HEIGHT				
	⩽ 5'-0"	5' TO 7'	⩽ 5'-0"	5' TO 8'	8' TO 10'	⩽ 6'-0"	6' TO 8'	8' TO 10'	10' TO 12'	12' TO 14'	⩽ 6'-0"	6' TO 8'	8' TO 10'	10' TO 12'	12' TO 14'
40.0 OR LESS	9'-11"	8'-4"	12'-2"	9'-8"	8'-8"	14'-10"	12'-10"	11'-6"	10'-6"	9'-9"	15'-1"	13'-1"	11'-8"	10'-8"	9'-11"
45.0	9'-4"	7'-11"	11'-6"	9'-1"	8'-2"	14'-0"	12'-2"	10'-10"	9'-11"	9'-2"	14'-3"	12'-4"	11'-0"	10'-1"	9'-4"
50.0	8'-10"	7'-6"	10'-11"	8'-8"	7'-9"	13'-4"	11'-6"	10'-4"	9'-5"	8'-8"	13'-6"	11'-8"	10'-6"	9'-7"	8'-10"
55.0	8'-5"	7'-2"	10'-5"	8'-3"	7'-4"	12'-8"	11'-0"	9'-10"	9'-0"	8'-4"	12'-11"	11'-2"	10'-0"	9'-1"	8'-5"
60.0	8'-1"	6'-10"	10'-0"	7'-11"	7'-1"	12'-2"	10'-6"	9'-5"	9'-7"	7'-11"	12'-4"	10'-8"	9'-7"	8'-9"	8'-1"
65.0	7'-9"	6'-7"	9'-7"	7'-7"	6'-9"	11'-8"	10'-1"	9'-0"	8'-3"	7'-8"	11'-10"	10'-3"	9'-2"	8'-5"	7'-9"
70.0	7'-6"	6'-4"	9'-3"	7'-4"	6'-6"	11'-3"	9'-9"	8'-8"	7'-11"	7'-4"	11'-5"	9'-11"	8'-10"	8'-1"	7'-6"
75.0	7'-3"	6'-1"	8'-11"	7'-1"	6'-4"	10'-10"	9'-5"	8'-5"	7'-8"	7'-1"	11'-0"	9'-7"	8'-7"	7'-10"	7'-3"
80.0	7'-0"	5'-11"	8'-8"	6'-10"	6'-1"	10'-6"	9'-1"	8'-2"	7'-5"	6'-11"	10'-8"	9'-3"	8'-3"	7'-7"	7'-0"
85.0	6'-9"	5'-9"	8'-5"	6'-7"	5'-11"	10'-2"	8'-10"	7'-11"	7'-3"	6'-8"	10'-4"	9'-0"	8'-0"	7'-4"	6'-9"
90.0	6'-7"	5'-7"	8'-2"	6'-5"	5'-9"	9'-11"	8'-7"	7'-8"	7'-0"	6'-6"	10'-1"	8'-9"	7'-10"	7'-1"	6'-7"
95.0	6'-5"	5'-5"	7'-11"	6'-3"	5'-7"	9'-8"	8'-4"	7'-6"	6'-10"	6'-4"	9'-10"	8'-6"	7'-7"	6'-11"	6'-5"
100.0	6'-3"	5'-3"	7'-9"	6'-1"	5'-6"	9'-5"	8'-2"	7'-3"	6'-8"	6'-2"	9'-7"	8'-3"	7'-5"	6'-9"	6'-3"
105.0	6'-1"	5'-2"	7'-6"	6'-0"	5'-4"	9'-2"	7'-11"	7'-1"	6'-6"	6'-0"	9'-4"	8'-1"	7'-3"	6'-7"	6'-1"
110.0	6'-0"	5'-1"	7'-4"	5'-10"	5'-2"	9'-0"	7'-9"	6'-11"	6'-4"	5'-10"	9'-1"	7'-11"	7'-1"	6'-5"	6'-0"
115.0	5'-10"	4'-11"	7'-2"	5'-8"	5'-1"	8'-9"	7'-7"	6'-9"	6'-2"	5'-9"	8'-11"	7'-9"	6'-11"	6'-4"	5'-10"
120.0	5'-9"	4'-10"	7'-1"	5'-7"	5'-0"	8'-7"	7'-5"	6'-8"	6'-1"	5'-7"	8'-9"	7'-7"	6'-9"	6'-2"	5'-9"
125.0	5'-7"	4'-9"	6'-11"	5'-6"	4'-11"	8'-5"	7'-3"	6'-6"	5'-11"	5'-6"	8'-7"	7'-5"	6'-7"	6'-1"	5'-7"
130.0	5'-6"	4'-8"	6'-9"	5'-4	4'-9"	8'-3"	7'-2"	6'-5"	5'-10"	5'-5"	8'-5"	7'-3"	6'-6"	5'-11"	5'-6"
135.0	5'-5"	4'-7"	6'-8"	5'-3"	4'-8"	8'-1"	7'-0"	6'-3"	5'-9"	5'-4"	8'-3"	7'-1"	6'-4"	5'-10"	5'-5"
140.0	5'-3"	4'-6"	6'-6"	5'-2"	4'-7"	7'-11"	6'-11"	6'-2"	5'-7"	5'-2"	8'-1"	7'-0"	6'-3"	5'-9"	5'-3"

Approved as complying with the Florida Building Code
Date 10/31/2013
NOA# 13-0530.11
Miami Dade Product Control
By

NON END RETENTION SYSTEM

FLORIDA BUILDING CODE (High Velocity Hurricane Zone)

WALTER A. TILLIT JR. LICENSE No. 44167 STATE OF FLORIDA PROFESSIONAL ENGINEER

P.E. SEAL/SIGNATURE/DATE

© 2013 TILTECO INC.

TILTECO INC.
TILLIT TESTING & ENGINEERING COMPANY
6355 N.W. 36th. St., Ste. 305 - VIRGINIA GARDENS, FL 33166
Phone : (305) 871-1530 , Fax : (305) 871-1531
e-mail: tilteco@aol.com
EB-0006719
WALTER A. TILLIT Jr., P.E.
FLORIDA Lic. # 44167

BERTHA ROLL-UP HURRICANE ABATEMENT W/ 58mm ER & NER SLAT

EASTERN METAL SUPPLY, INC.
(ASSA # 1)
4268 WESTROADS DRIVE
WEST PALM BEACH, FL 33407
PH (800) 432-2204 FAX (561) 841-4592

REV. No	DESCRIPTION	DATE	REV. No	DESCRIPTION	DATE
1			3		
2			4		

A.G. DRAWN BY:

05/22/13 DATE

13-036 DRAWING No

SHEET 26 OF 27

MULLION LOADING CHART MAXIMUM A.S.D. DESIGN PRESSURE RATING (psf) AND CORRESPONDING MAXIMUM SPAN "L"(Ft) FOR A GIVEN TYPE OF MULLION AND MULLION SPACING (Ft.).

(USE MAXIMUM VALUES BETWEEN POSITIVE AND NEGATIVE A.S.D. LOAD)

MAXIMUM A.S.D. DESIGN PRESSURE RATING (p.s.f.)	TYPE 1 MULLION (K) 3" x 4" x 1/8"				TYPE 2 MULLION (L) 4" x 4" x 1/4"				TYPE 3 MULLION (M) 4" x 6" x 1/4"					
	MULLION SPACING				MULLION SPACING				MULLION SPACING					
	≤ 4'-0"	4' TO 5'	5' TO 6'	6' TO 8'	≤ 4'-0"	4' TO 5'	5' TO 6'	6' TO 8'	≤ 4'-0"	4' TO 5'	5' TO 6'	6' TO 8'	8' TO 10'	10' TO 12'
40.0 OR LESS	9'-0"	8'-4"	7'-10"	8'-2"	11'-9"	10'-11"	10'-3"	10'-9"	16'-4"	15'-2"	14'-3"	14'-10"	13'-10"	13'-0"
45.0	8'-8"	8'-0"	7'-7"	7'-10"	11'-4"	10'-6"	9'-11"	10'-4"	15'-8"	14'-7"	13'-8"	14'-4"	13'-3"	12'-6"
50.0	8'-4"	7'-9"	7'-3"	7'-7"	10'-11"	10'-2"	9'-7"	10'-0"	15'-2"	14'-1"	13'-3"	13'-10"	12'-10"	12'-1"
55.0	8'-1"	7'-6"	7'-1"	7'-4"	10'-7"	9'-10"	9'-3"	9'-8"	14'-8"	13'-7"	12'-10"	13'-4"	12'-5"	11'-8"
60.0	7'-10"	7'-3"	6'-10"	7'-2"	10'-3"	9'-7"	9'-0"	9'-5"	14'-3"	13'-3"	12'-5"	13'-0"	12'-1"	11'-4"
65.0	7'-8"	7'-1"	6'-8"	7'-0"	10'-0"	9'-4"	8'-9"	9'-2"	13'-11"	12'-11"	12'-2"	12'-8"	11'-9"	11'-1"
70.0	7'-5"	6'-11"	6'-6"	6'-10"	9'-9"	9'-1"	8'-6"	8'-11"	13'-7"	12'-7"	11'-10"	12'-4"	11'-5"	10'-9"
75.0	7'-3"	6'-9"	6'-4"	6'-8"	9'-7"	8'-10"	8'-4"	8'-8"	13'-3"	12'-3"	11'-7"	12'-1"	11'-2"	10'-6"
80.0	7'-2"	6'-7"	6'-3"	6'-6"	9'-4"	8'-8"	8'-2"	8'-6"	12'-11"	12'-0"	11'-4"	11'-10"	10'-11"	10'-4"
85.0	7'-0"	6'-6"	6'-1"	6'-4"	9'-2"	8'-6"	8'-0"	8'-4"	12'-8"	11'-9"	11'-1"	11'-7"	10'-9"	10'-1"
90.0	6'-10"	6'-4"	6'-0"	6'-3"	9'-0"	8'-4"	7'-10"	8'-2"	12'-5"	11'-7"	10'-11"	11'-4"	10'-6"	9'-11"
95.0	6'-9"	6'-3"	5'-10"	6'-2"	8'-10"	8'-2"	7'-9"	8'-1"	12'-3"	11'-4"	10'-8"	11'-2"	10'-4"	9'-9"
100.0	6'-7"	6'-2"	5'-9"	6'-0"	8'-8"	8'-1"	7'-7"	7'-11"	12'-0"	11'-2"	10'-6"	10'-11"	10'-2"	9'-7"
105.0	6'-6"	6'-1"	5'-7"	5'-11"	8'-6"	7'-11"	7'-6"	7'-9"	11'-10"	11'-0"	10'-4"	10'-9"	—	—
110.0	6'-5"	5'-11"	5'-5"	5'-10"	8'-5"	7'-10"	7'-4"	7'-8"	11'-8"	10'-10"	10'-2"	10'-7"	—	—
115.0	6'-4"	5'-10"	5'-4"	5'-8"	8'-3"	7'-8"	7'-3"	7'-7"	11'-6"	10'-8"	10'-0"	10'-5"	—	—
120.0	6'-3"	5'-9"	5'-3"	5'-7"	8'-2"	7'-7"	7'-2"	7'-5"	11'-4"	10'-6"	9'-11"	10'-4"	—	—
125.0	6'-2"	5'-7"	5'-1"	5'-5"	8'-1"	7'-6"	7'-0"	7'-4"	11'-2"	10'-4"	9'-9"	10'-2"	—	—
130.0	6'-1"	5'-6"	5'-0"	5'-4"	7'-11"	7'-5"	6'-11"	7'-3"	11'-0"	10'-3"	9'-8"	10'-0"	—	—
135.0	6'-0"	5'-5"	4'-11"	5'-3"	7'-10"	7'-3"	6'-10"	7'-2"	10'-11"	10'-1"	9'-6"	9'-11"	—	—
140.0	5'-11"	5'-3"	4'-10"	5'-2"	7'-9"	7'-2"	6'-9"	7'-1"	10'-9"	10'-0"	9'-5"	9'-10"	—	—

NOTES : REFER TO ELEVATIONS ON SHEET 17 OF 27

1-. FOR MULLIONS INSTALLED W/O STORM BARS

A) MULLION SPACING SHALL BE SUCH THAT MAXIMUM SLAT SPAN SHALL NOT BE EXCEEDED

2-. FOR MULLIONS INSTALLED W/ STORM BARS & HEADERS

A) MULLION SPACING SHALL BE SUCH THAT MAXIMUM HEADER SPAN SHALL NOT BE EXCEEDED

B) STORM BAR SPACING SHALL BE SUCH THAT MAXIMUM SLAT SPAN SHALL NOT BE EXCEEDED

Approved as complying with the Florida Building Code
Date 10/31/2013
NOA# 13-0530.11
Miami Dade Product Control
By

NON END RETENTION SYSTEM

WALTER A. TILLIT JR. LICENSE No. 44167 STATE OF FLORIDA PROFESSIONAL ENGINEER
P.E. SEAL/SIGNATURE/DATE

© 2013 TILTECO INC.

TILTECO INC.
TILLIT TESTING & ENGINEERING COMPANY
8355 N.W. 36th. St., Ste. 305 - VIRGINIA GARDENS, FL 33166
Phone : (305) 871-1530 ; Fax : (305) 871-1531
e-mail: tilteco@aol.com
EB-0006719
WALTER A. TILLIT Jr., P.E.
FLORIDA Lic. # 44167

FLORIDA BUILDING CODE (High Velocity Hurricane Zone)

BERTHA ROLL-UP HURRICANE ABATEMENT W/ 58mm ER & NER SLAT

EASTERN METAL SUPPLY, INC.
(ASSA # 1)
4268 WESTROADS DRIVE
WEST PALM BEACH, FL 33407
PH (800) 432-2204 FAX (561) 841-4592

REV. No	DESCRIPTION	DATE	REV. No	DESCRIPTION	DATE
1			3		
2			4		

A.G.
DRAWN BY:

05/22/13
DATE

13--036
DRAWING No

SHEET 27 OF 27