MIAMI-DADE COUNTY
PRODUCT CONTROL SECTION
11805 SW 26 Street, Room 208
Miami, Florida 33175-2474
T (786) 315-2590 F (786) 315-2599
www.miamidade.gov/economy

DEPARTMENT OF REGULATORY AND ECONOMIC RESOURCES (RER)
BOARD AND CODE ADMINISTRATION DIVISION

NOTICE OF ACCEPTANCE (NOA)

Loren Cook Company
2015 E. Dale Street
Springfield, MO 65803

SCOPE:

This NOA is being issued under the applicable rules and regulations governing the use of construction materials. The documentation submitted has been reviewed and accepted by Miami-Dade County RER-Product Control Section to be used in Miami Dade County and other areas where allowed by the Authority Having Jurisdiction (AHJ).

This NOA shall not be valid after the expiration date stated below. The Miami-Dade County Product Control Section (In Miami Dade County) and/or the AHJ (in areas other than Miami Dade County) reserve the right to have this product or material tested for quality assurance purposes. If this product or material fails to perform in the accepted manner, the manufacturer will incur the expense of such testing and the AHJ may immediately revoke, modify, or suspend the use of such product or material within their jurisdiction. RER reserves the right to revoke this acceptance, if it is determined by Miami-Dade County Product Control Section that this product or material fails to meet the requirements of the applicable building code.

This product is approved as described herein, and has been designed to comply with the Florida Building Code, including the High Velocity Hurricane Zone.

DESCRIPTION: Model CPV, CPS and CPF Steel Rooftop Fan

APPROVAL DOCUMENT: Drawing No. **SD130522-18**, titled "CPV/CPS/CPF Hurricane Rated", sheets 1 through 14 of 14, dated 05/22/2013, prepared by Loren Cook Company, signed and sealed by Bradley F. Skidmore, P.E., bearing the Miami-Dade County Product Control approval stamp with the Notice of Acceptance number and approval date by the Miami-Dade County Product Control Section.

MISSILE IMPACT RATING: Large and Small Missile Impact Resistant

LABELING: Each unit shall bear a permanent label with the manufacturer's name or logo, city, state, model/series, and following statement: "Miami-Dade County Product Control Approved", unless otherwise noted herein.

RENEWAL of this NOA shall be considered after a renewal application has been filed and there has been no change in the applicable building code negatively affecting the performance of this product.

TERMINATION of this NOA will occur after the expiration date or if there has been a revision or change in the materials, use, and/or manufacture of the product or process. Misuse of this NOA as an endorsement of any product, for sales, advertising or any other purposes shall automatically terminate this NOA. Failure to comply with any section of this NOA shall be cause for termination and removal of NOA.

ADVERTISEMENT: The NOA number preceded by the words Miami-Dade County, Florida, and followed by the expiration date may be displayed in advertising literature. If any portion of the NOA is displayed, then it shall be done in its entirety.

INSPECTION: A copy of this entire NOA shall be provided to the user by the manufacturer or its distributors and shall be available for inspection at the job site at the request of the Building Official.

This NOA consists of this page 1 and evidence page E-1, as well as approval document mentioned above.

The submitted documentation was reviewed by **Carlos M. Utrera, P.E.**

MIAMI-DADE COUNTY APPROVED

12/12/2013

NOTICE OF ACCEPTANCE: EVIDENCE SUBMITTED

A. DRAWINGS

1. Drawing No. **SD130522-18**, titled "CPV/CPS/CPF Hurricane Rated", sheets 1 through 14 of 14, dated 05/22/2013, prepared by Loren Cook Company, signed and sealed by Bradley F. Skidmore, P.E.

B. TESTS

1. Test reports on 1) Uniform Static Air Pressure Test, Loading per FBC TAS 202-94
   2) Large Missile Impact Test per FBC, TAS 201-94
   along with marked-up drawings and installation diagram of CPV Fans, prepared by Architectural Testing, Inc., Test Report No. **B9387.01-801-18**, dated 04/17/2013, signed and sealed by Vinu J. Abraham, P.E.

C. CALCULATIONS

1. Wind Load and Anchor verification calculations, prepared by Loren Cook Company, dated 11/27/2013, signed and sealed by Bradley F. Skidmore, P.E.

D. QUALITY ASSURANCE

1. Miami-Dade Department of Regulatory and Economic Resources (RER)

E. MATERIAL CERTIFICATIONS

1. None.

F. STATEMENTS

1. Statement letter of code conformance to 2010 FBC issued by Loren Cook Company, dated 05/29/2013, signed and sealed by Bradley F. Skidmore, P.E.
2. Statement letter of no financial interest issued by Loren Cook Company, dated 05/29/2013, signed and sealed by Bradley F. Skidmore, P.E.

12/12/2013

Carlos M. Utrera, P.E.
Product Control Examiner
NOA No. 13-0604.08
Expiration Date: December 19, 2018
Approval Date: December 19, 2013

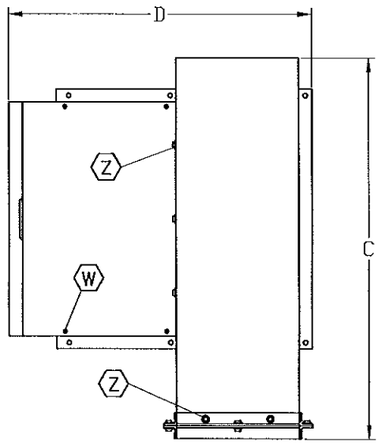

UNIT SIZE	A DIM	B DIM	C DIM	D DIM	E DIM	MAXIMUM SHIPPING WT.
490	111 1/2	56 1/4	90 1/4	75	47 5/8	2375
445	101 3/4	51 3/8	82 1/16	71 9/16	43 5/8	1984
402	92 1/2	46 3/4	74 7/16	64 5/16	39 5/8	1556
365	84 1/2	42 3/4	67 5/8	60 7/16	35 5/8	1277
330	76 3/4	38 7/8	61 5/16	53 13/16	33 5/8	1056
300	71 1/4	35 5/8	55 7/8	51 1/2	30 5/8	897
270	63 3/4	32 3/8	50 9/16	49 1/16	28 3/4	736
245/250	58 1/4	29 5/8	46 9/16	44 3/16	26 3/4	620
220/225	53	27	43 1/2	42 1/8	23 3/4	547
210	49 3/4	25 3/8	41 7/16	41	22 3/4	499
195	46 3/8	23 11/16	37 13/16	38 7/8	20 3/4	450
180	43 1/8	22 1/16	36 1/4	34 11/16	20 3/4	404
165	39 7/8	20 7/16	33 9/16	33 9/16	18 3/4	341
150	37 1/8	19 1/16	31 1/16	32 3/8	18 3/4	297
135	34 3/16	18	28 3/16	31 1/4	18 3/4	260
120	32 9/16	18	26 5/16	28 1/8	18 3/4	225
100	30 3/8	18	23 3/4	26 1/2	18 3/4	165
80	30 3/8	18	23 3/4	26 1/2	18 3/4	165
70	30 3/8	18	23 3/4	26 1/2	18 3/4	165
60	30 3/8	18	23 3/4	26 1/2	18 3/4	165

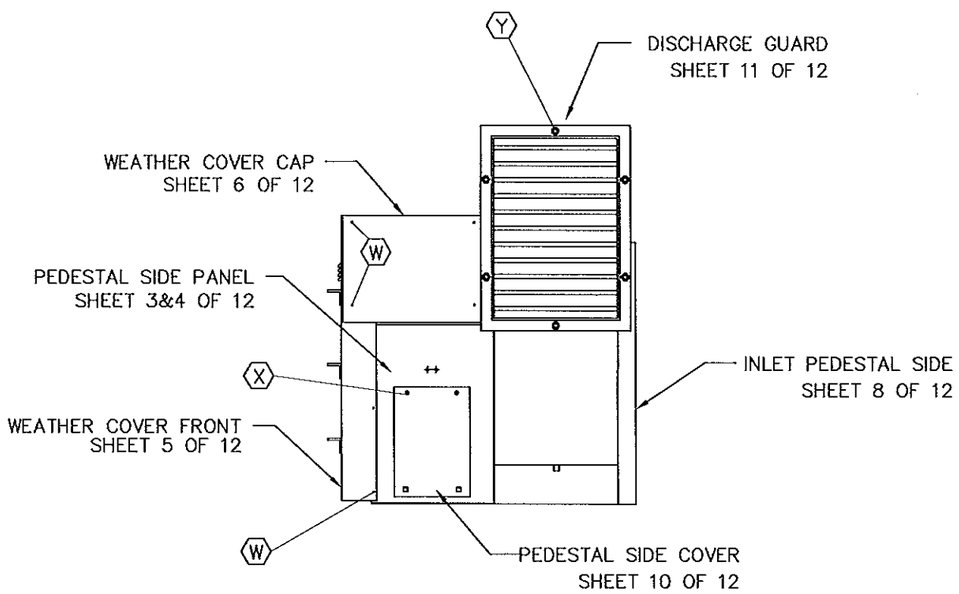

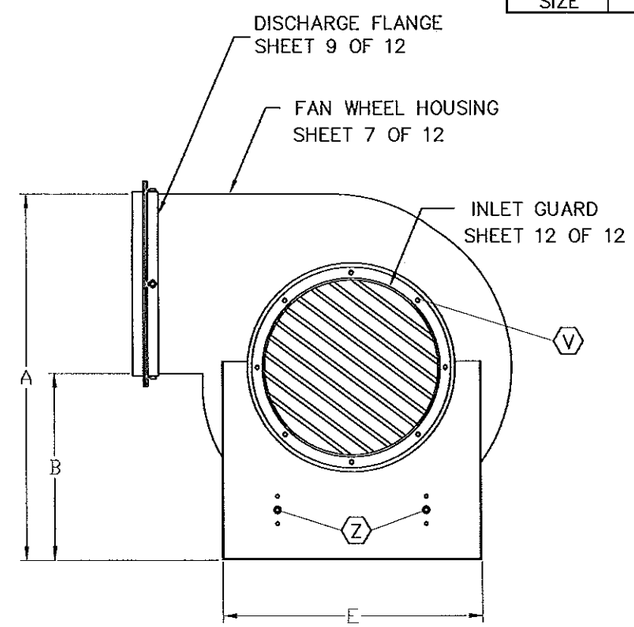

FASTENER SCHEDULE	
Z	3/8-16 HEX HEAD BOLT SAE GRADE 2
Y	SIZE 490: 1/2-13 BOLT SAE GR2 SIZE 60-445: 3/8-16 BOLT SAE GR2
X	1/4 X 3/4 SELF-DRILL SCREW ASTM C1513
W	#12 X 3/4 SELF-DRILL SCREW ASTM C1513
V	SIZE 330-490: 1/2-13 BOLT SAE GR2 SIZE 60-300: 3/8-16 BOLT SAE GR2
SYMBOL	DESCRIPTION

NOTE:
DESIGN PRESSURE: +/- 100 PSF
IMPACT RATING: LARGE MISSILE IMPACT RESISTANT
DESIGN TESTING AND INSTALLATION CONFORMS TO FLORIDA BUILDING CODE
ALL CARBON STEEL IS COATED WITH BAKED POLYESTER POWDER COATING OR EQUAL
ALL CARBON STEEL COMPONENTS HAVE MINIMUM YIELD STRENGTH = 30KSI
SHIPPING WEIGHTS IN POUNDS, LESS MOTOR AND ACCESSORIES
ALL DIMENSIONS IN INCHES

Approved as complying with the Florida Building Code
Date 12/19/2013
NOA# 13-0604.08
Miami Dade Product Control
By

BRADLEY F. SKIDMORE
LICENSE No. 74411
STATE OF FLORIDA
PROFESSIONAL ENGINEER

BRADLEY F. SKIDMORE P.E.
FL PE LIC. NO.74411

MAT'L	–	
DRAWN	BFS	5/22/13
DESIGNER	BFS	SHEET 1 OF 14

DO NOT SCALE DRAWING
TOLERANCES UNLESS OTHERWISE NOTED

DECIMAL	FRACTIONAL
.XX=±.063" .XXX=±.010" .XXXX=±.001"	≤12"=±1/16" >12" THRU 96"=±1/8" >96" THRU 144"=±1/4" >144"=±3/8"
ANGULAR ±2'	(NC)=NO INSPECTION REQ'D

LOREN COOK CO.
MANUFACTURERS OF AIR MOVING EQUIPMENT
SPRINGFIELD, MISSOURI

ASSEMBLY
CPV/CPS/CPF
HURRICANE RATED

SIZE	DRAWING NO.	REV.
B	SD130522-18	B

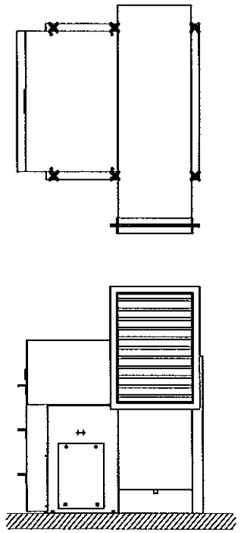

DIRECT MOUNT – STEEL STRUCTURE (36KSI)
UNIT MUST BE ATTACHED TO ROOF STRUCTURE USING SIX GRADE 5 FASTENERS OF SIZE LISTED BELOW.

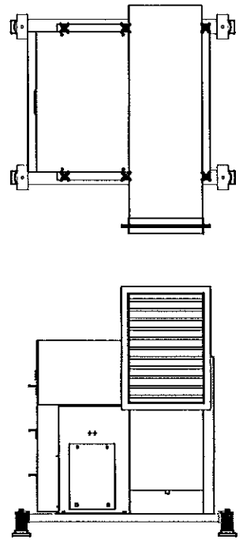

ISOLATION RAIL MOUNT
UNIT MUST BE ATTACHED TO ISOLATION RAILS USING SIX GRADE 5 BOLTS LISTED BELOW. THE ISOLATORS WILL BE ANCHORED TO THE ROOF USING FASTENER SIZE LISTED IN TABLE.

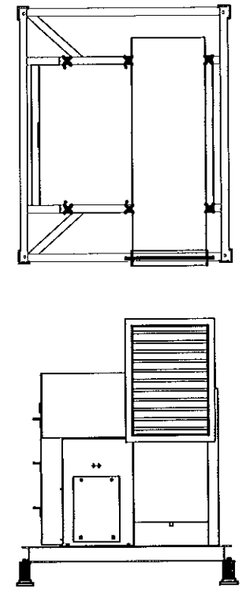

ISOLATION BASE MOUNT
UNIT MUST BE ATTACHED TO ISOLATION RAILS USING SIX GRADE 5 BOLTS LISTED BELOW. THE ISOLATORS WILL BE ANCHORED TO THE ROOF USING FASTENER SIZE LISTED IN THE TABLE

UNIT SIZE	DIRECT MOUNT	ISOLATION RAIL AND ISOLATION BASE MOUNT (REQUIRES FOUR ISOLATORS PER UNIT WITH TWO ATTACHMENT ANCHORS FOR EACH ISOLATOR)					
				CONCRETE ATTACHMENT		STEEL STRUCTURE	WOOD ATTACHMENT
	MINIMUM HOLD-DOWN BOLT SIZE	ISOLATOR TYPE	VERTICAL RESTRAINT CAPACITY	ANCHOR SIZE	MINIMUM ENGAGEMENT	GRADE 5 BOLT SIZE	LAG BOLT SIZE
60 – 135	3/8	LIGHT	1000#	3/8	3"	3/8	3/8
150 – 225	1/2						
245 – 300	5/8	MEDIUM	2300#	5/8	4"	5/8	
330 – 402	3/4						
445 – 490	7/8	HEAVY	4000#	5/8	4"	5/8	

ANCHORAGE OF FAN BASE AND ISOLATORS TO ROOF STRUCTURE

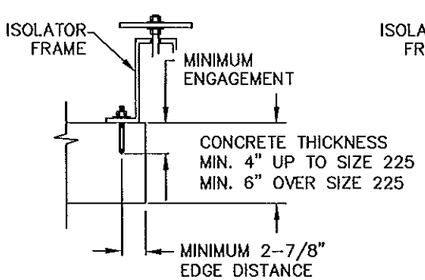

CONCRETE ROOF DECK
MINIMUM 3000PSI CONCRETE

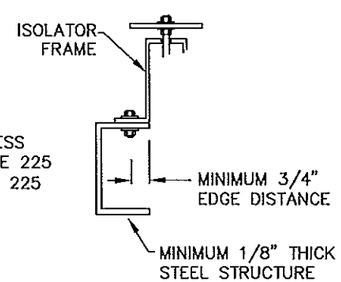

STEEL ROOF STRUCTURE
A36 STEEL STRUCTURE
MINIMUM Fy=36KSI

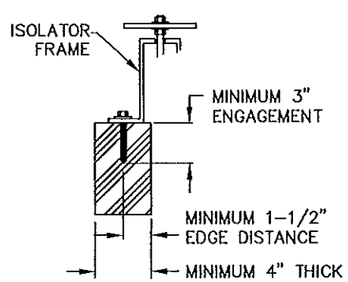

WOOD ROOF STRUCTURE
MIN. 4" NOMINAL THICK WOOD
MIN SG = .42

Approved as complying with the Florida Building Code
Date 12/19/2013
NOA# 13-0604.08
Miami Dade Product Control
By

BRADLEY F. SKIDMORE
LICENSE
No. 74411
STATE OF FLORIDA
PROFESSIONAL ENGINEER
11/27/13

BRADLEY F. SKIDMORE P.E.
FL PE LIC. NO.74411

NOTES:

1) LOREN COOK MODEL CP FANS AS REFERRED TO HEREIN REFERS TO ALL LOREN COOK MODEL VENT SETS HAVING OUTER HOUSING CONSTRUCTED OF CARBON STEEL OR STAINLESS STEEL AND INDICATED AS MODEL CPV, CPS , CPS-A, CPFB OR CPFD.
2) THIS APPROVAL IS FOR THE STRUCTURAL PERFORMANCE AND IMPACT RESISTANCE ONLY. INTERIOR MECHANISM AND/OR ELECTRICAL CIRCUITRY ARE OUTSIDE THE SCOPE OF THIS APPROVAL.
3) CLOCKWISE ROTATION IS DEPICTED IN THE ILLISTRATIONS IN THIS DOCUMENT. CLOCKWISE AND COUNTER-CLOCKWISE ROTATIONS ARE BOTH INCLUDED IN THE SCOPE OF THIS APPROVAL.
4) THE TOP HORIZONTAL (THD) FAN DISCHARGE IS DEPICTED IN THE ILLISTRATIONS OF THIS DOCUMENT. ALL NORMAL DISCHARGE LOCATIONS ARE INCLUDED IN THIS APPROVAL. (THD,BHD,BAU,UPD,TAU,TAD,DBD)
5) THIS PRODUCT HAS NOT BEEN TESTED FOR WATER PENETRATION. THIS UNIT IS NOT CONSIDERED A RIDGE VENT.
6) THIS PRODUCT IS INTENDED TO ALLOW AIRFLOW TO PASS THROUGH ITS INLET AND OUTLET. WHEN THE INLET AND OUTLET OF THE FAN REQUIRE DUCT WORK, GUARDS ARE NOT REQUIRED ON THAT OPENING. ACCESSORIES (I.E. RAIN HOODS, BIRD SCREENS AND FILTER BOXES) ARE NOT PART OF THIS APPROVAL.
7) ALL FASTENERS ARE TO BE HIGH QUALITY CORROSION RESISTANT STEEL OR STAINLESS STEEL.
8) WHEN INSTALLING ON ISOLATORS, THE ISOLATORS MUST HAVE RESTRAINT CAPACITY TO RESIST THE UPLIFT AND OVERTURNING FORCES PRODUCED AT THE DESIGN WINDLOAD. FREE-STANDING SPRINGS ARE NOT ALLOWED.
9) ISOLATOR ANCHORS MUST BE PROPERLY SIZED TO RESIST THE FORCES PRODUCED AT THE DESIGN WINDLOAD.
10) THE INSTALLER IS RESPONSIBLE FOR CHECKING THAT ALL FASTENERS ARE PROPERLY INSTALLED AND ALL ACCESS PANELS ARE IN PLACE BEFORE PUTTING THE UNIT INTO SERVICE.
11) ALL FASTENERS AND ACCESS PANELS MUST BE PROPERLY REPLACED AFTER MAINTENANCE OPERATIONS HAVE BEEN PERFORMED TO MAINTAIN CODE COMPLIANCE.

MAT'L	–	
DRAWN	BFS	5/22/13
DESIGNER	BFS	SHEET 2 OF 14

DO NOT SCALE DRAWING
TOLERANCES UNLESS OTHERWISE NOTED

DECIMAL	FRACTIONAL
.XX=±.063"	≤12"=±1/16"
.XXX=±.010"	>12" THRU 96"=±1/8"
.XXXX=±.001"	>96" THRU 144"=±1/4"
ANGULAR ±2'	>144"=±3/8"
	(NC)=NO INSPECTION REQ'D

LOREN COOK CO.®
MANUFACTURERS OF AIR MOVING EQUIPMENT
SPRINGFIELD, MISSOURI

ASSEMBLY
CPV/CPS/CPF
HURRICANE RATED

SIZE	DRAWING NO.	REV.
B	SD130522-18	A

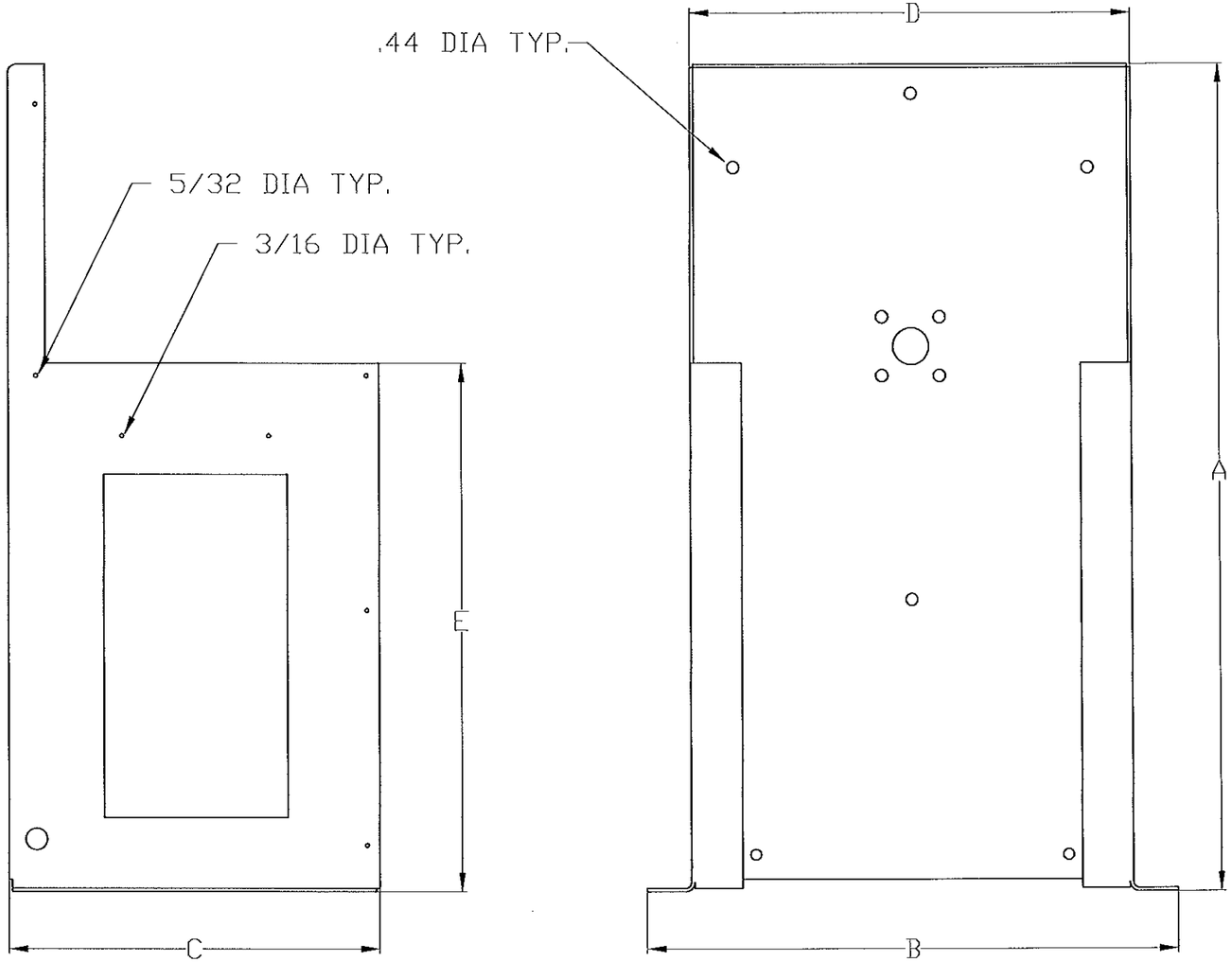

180	33 1/2	20 3/4	15 1/8	18	21 3/8	10 GA.
165	31 3/8	18 3/4	15 1/8	16	20 1/8	10 GA.
150	29	18 3/4	15 1/8	16	18 3/4	12 GA.
135	26 15/16	18 3/4	15 1/8	16	17 11/16	12 GA.
120	26 3/16	18 3/4	13 1/8	16	17 11/16	12 GA.
60-100	25 3/16	18 3/4	13 1/8	16	17 11/16	12 GA.
SIZE	A	B	C	D	E	F
UNIT	DIM	DIM	DIM	DIM	DIM	DIM

Approved as complying with the Florida Building Code
Date 12/19/2013
NOA# 13-0604.08
Miami Dade Product Control
By

BRADLEY F. SKIDMORE
LICENSE
No. 74411
STATE OF FLORIDA
PROFESSIONAL ENGINEER
11/27/13

BRADLEY F SKIDMORE P.E.
FL PE LIC. NO. 74411

MAT'L	A569 HRS F GA.	
DRAWN	BFS	5/22/13
DESIGNER	BFS	SHEET 3 OF 14

DO NOT SCALE DRAWING
TOLERANCES UNLESS OTHERWISE NOTED

DECIMAL	FRACTIONAL
.XX=±.063"	≤12"=±1/16"
.XXX=±.010"	>12" THRU 96"=±1/8"
.XXXX=±.001"	>96" THRU 144"=±1/4"
	>144"=±3/8"
ANGULAR ±2°	(NC)=NO INSPECTION REQ'D

LOREN COOK CO.®
MANUFACTURERS OF AIR MOVING EQUIPMENT
SPRINGFIELD, MISSOURI

CP PEDISTAL SIDE (60-180)
CPV/CPS/CPF
HURRICANE RATED

SIZE	DRAWING NO.	REV.
B	SD130522-18	B

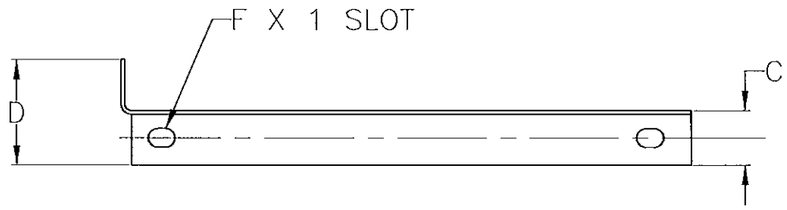

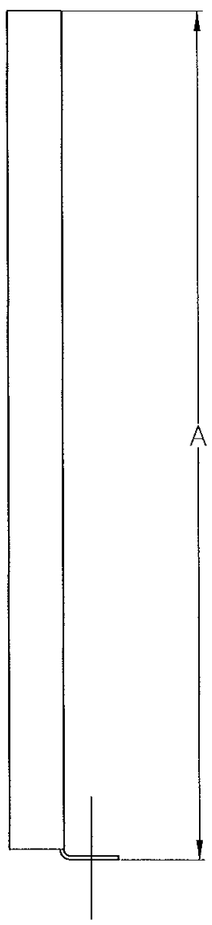

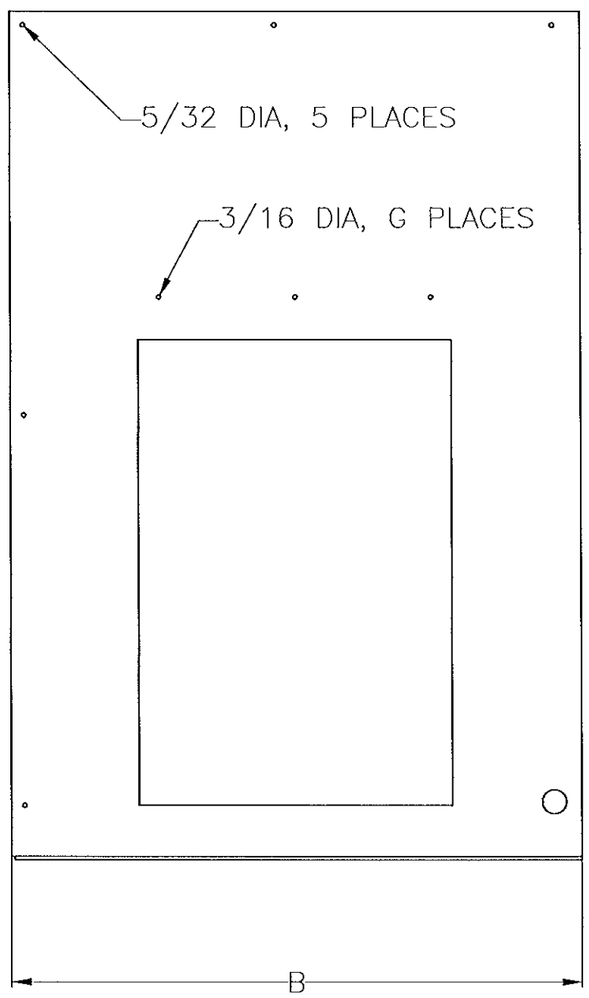

490	55 1/8	28	2	3 13/16	7 GA.	13/16	3
445	50 1/4	28	2	3 13/16	7 GA.	13/16	3
402	45 5/8	24	2	3 13/16	7 GA.	13/16	3
365	41 7/8	24	2	3 13/16	7 GA.	11/16	3
330	38	21	2	3 13/16	7 GA.	11/16	3
300	34 3/4	21	2	3 13/16	7 GA.	9/16	2
270	31 11/16	21	2	3 7/8	10 GA.	9/16	2
245/250	28 15/16	18	2	3 7/8	10 GA.	9/16	2
220/225	26 5/16	18	1 1/2	2 7/8	10 GA.	9/16	2
210	24 11/16	18	1 1/2	2 7/8	10 GA.	9/16	2
195	23	18	1 1/2	2 7/8	10 GA.	7/16	2
UNIT	A	B	C	D	E	F	G
SIZE	DIM	DIM	DIM	DIM	DIM	DIM	DIM

Approved as complying with the Florida Building Code
Date 12/19/2013
NOA# 13-0604.08
Miami Dade Product Control
By

BRADLEY F. SKIDMORE
LICENSE
No. 74411
11/27/13
STATE OF FLORIDA
PROFESSIONAL ENGINEER

BRADLEY F SKIDMORE
FL PE LIC. NO. 74411

NOTES:
1. 2 REQUIRED, BEND ONE OPPOSITE

MAT'L	A1011 SHEET STL, E GA.	
DRAWN	BFS	5/22/13
DESIGNER	BFS	SHEET 4 OF 14

DO NOT SCALE DRAWING
TOLERANCES UNLESS OTHERWISE NOTED

DECIMAL	FRACTIONAL
.XX=±.063"	≤12"=±1/16"
.XXX=±.010"	>12" THRU 96"=±1/8"
.XXXX=±.001"	>96" THRU 144"=±1/4"
	>144"=±3/8"
ANGULAR ±2°	(NC)=NO INSPECTION REQ'D

LOREN COOK CO.®
MANUFACTURERS OF AIR MOVING EQUIPMENT
SPRINGFIELD, MISSOURI

PEDESTAL SIDE PANEL
CPV/CPS/CPF
HURRICANE RATED

SIZE	DRAWING NO.	REV.
B	SD130522-18	B

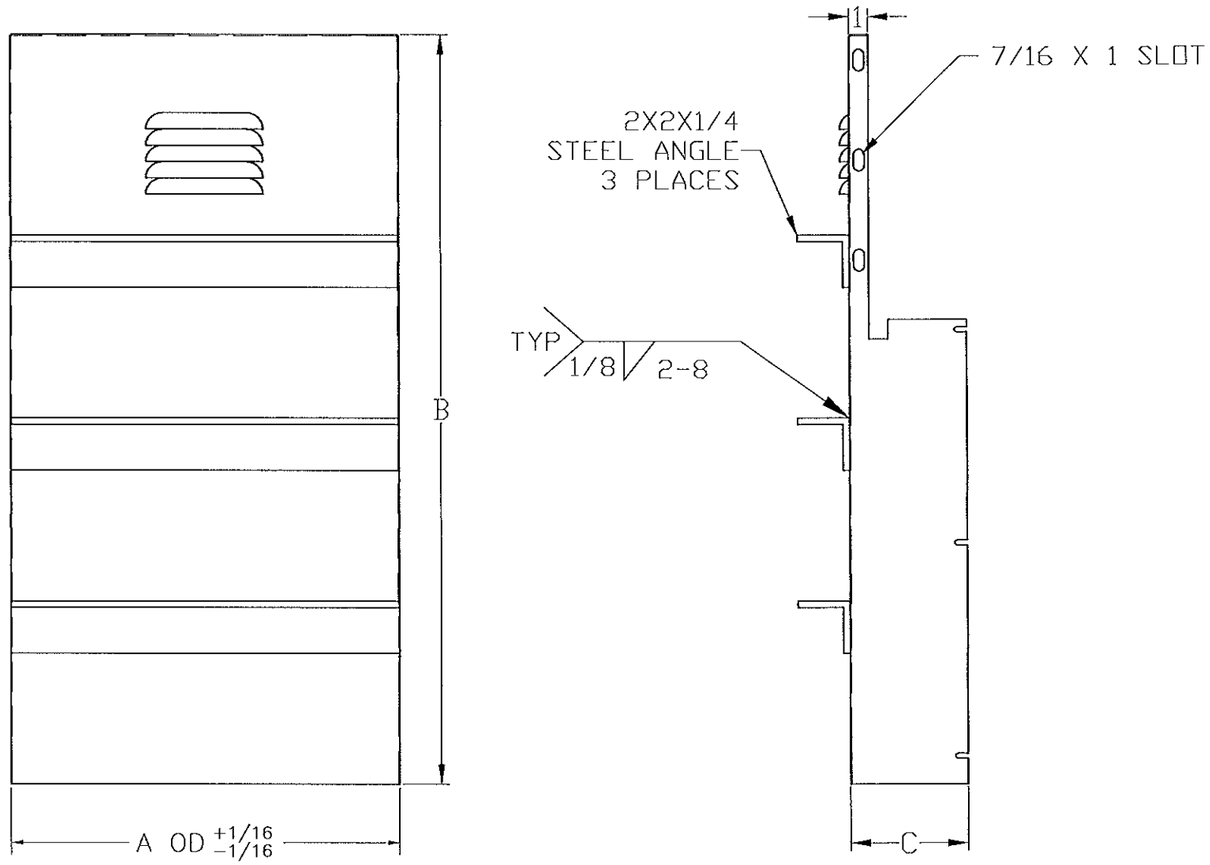

490	44	83 5/8	7	18GA
445	40	76 1/4	7	18GA
402	36	69 5/8	7	18GA
365	32	63 5/8	7	18GA
330	30	57 3/4	6	18GA
300	27	53	6	18GA
270	25	48 1/4	6	18GA
245/250	23	44	6	18GA
220/225	21	40 3/8	6	18GA
210	20	38 1/4	6	18GA
195	18	35 1/8	5	18GA
180	18	33	5	18GA
165	16	30 7/8	5	18GA
150	16	28 1/2	5	18GA
135	16	26 3/8	5	18GA
120	16	25 5/8	5	18GA
60–100	16	24 11/16	5	18GA
UNIT	A	B	C	MATERIAL
SIZE	DIM	DIM	DIM	GAUGE

Approved as complying with the
Florida Building Code
Date 12/19/2013
NOA# 13-0604.08
Miami Dade Product Control
By

BRADLEY F. SKIDMORE
LICENSE No. 74411
STATE OF FLORIDA
PROFESSIONAL ENGINEER
11/27

BRADLEY F. SKIDMORE P.E.
FL PE LIC. NO. 74411

MAT'L	A1011 SHEET/A36 ANGLE	
DRAWN	BFS	5/22/13
DESIGNER	BFS	SHEET 5 OF 14

DO NOT SCALE DRAWING
TOLERANCES UNLESS OTHERWISE NOTED

DECIMAL
.XX=±.063"
.XXX=±.010"
.XXXX=±.001"

FRACTIONAL
≤12"=±1/16"
>12" THRU 96"=±1/8"
>96" THRU 144"=±1/4"
>144"=±3/8"

ANGULAR
±2°

(NC)=NO INSPECTION REQ'D

LOREN COOK CO.®
MANUFACTURERS OF AIR MOVING EQUIPMENT
SPRINGFIELD, MISSOURI

WEATHER COVER FRONT
CPV/CPS/CPF
HURRICANE RATED

SIZE	DRAWING NO.	REV.
B	SD130522-18	B

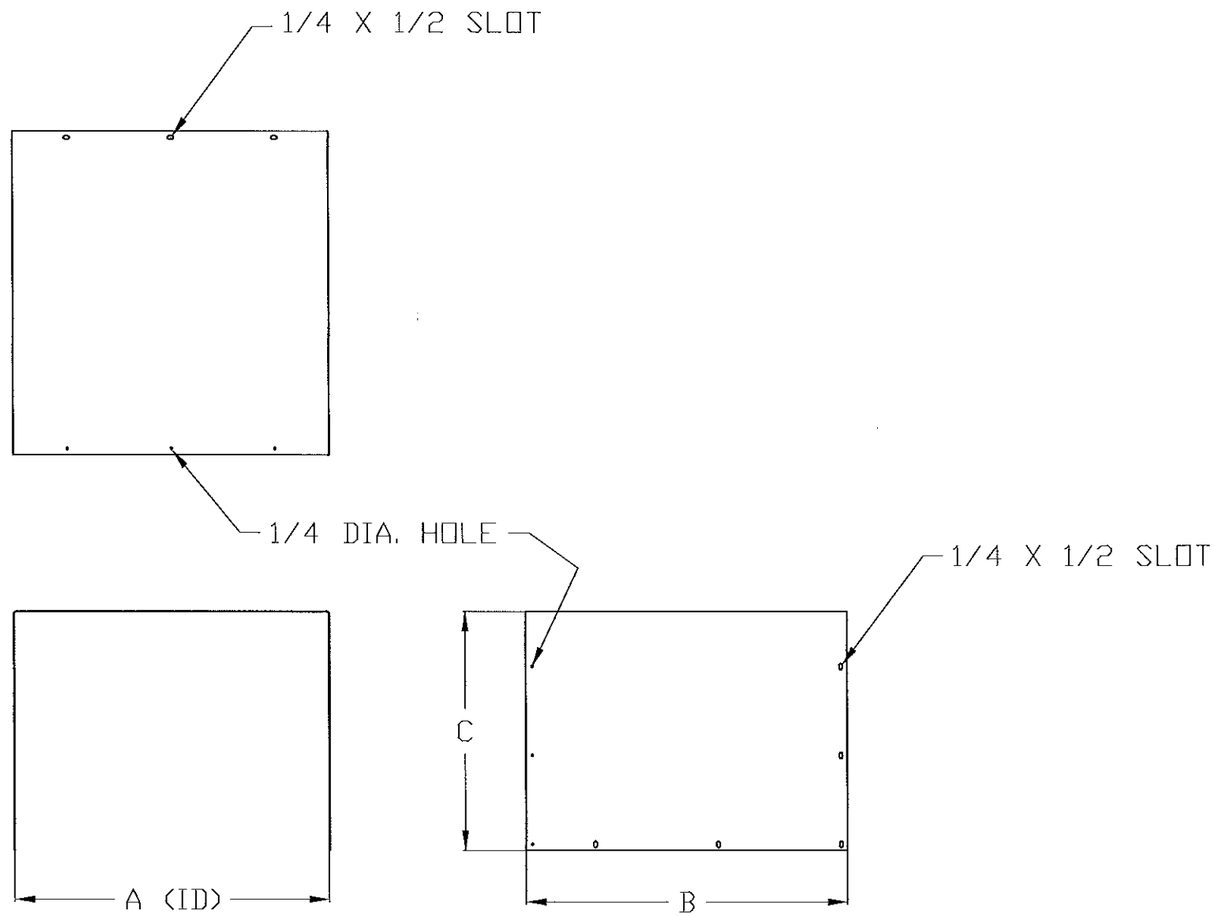

490	44 1/4	34 3/16	30 3/8	16 GA
445	40 1/4	34 3/16	27 7/8	16 GA
402	36 1/4	30 3/16	25 7/8	16 GA
365	32 1/4	30 3/16	23 5/8	16 GA
330	30 1/4	26 3/16	21 5/8	16 GA
300	27 1/4	26 3/16	20 1/8	16 GA
270	25 1/4	26 3/16	18 7/16	16 GA
245/250	23 1/8	23 3/16	16 15/16	16 GA
220/225	21 1/16	23 3/16	15 15/16	16 GA
210	20 1/16	23 3/16	15 7/16	16 GA
195	18 1/16	22 3/16	13 15/16	16 GA
180	18 1/16	19 3/16	13 7/16	16 GA
165	16 1/16	19 3/16	12 9/16	16 GA
150	16 1/16	19 3/16	11 9/16	16 GA
135	16 1/16	19 3/16	10 9/16	16 GA
120	16 1/16	17 3/16	9 13/16	16 GA
60-100	16 1/16	17 3/16	8 13/16	16 GA
UNIT	A	B	C	MATERIAL
SIZE	DIM	DIM	DIM	GAUGE

Approved as complying with the
Florida Building Code
Date 12/19/2013
NOA# 13-0604.08
Miami Dade Product Control
By

BRADLEY F. SKIDMORE
LICENSE
No. 74411
STATE OF FLORIDA
PROFESSIONAL ENGINEER

BRADLEY F. SKIDMORE P.E.
FL PE LIC. NO. 74411

MAT'L	A-1011 CS-B	
DRAWN	BFS	5/22/13
DESIGNER	BFS	SHEET 6 OF 14

DO NOT SCALE DRAWING
TOLERANCES UNLESS OTHERWISE NOTED

DECIMAL	FRACTIONAL
.XX=±.063"	≤12"=±1/16"
.XXX=±.010"	>12" THRU 96"=±1/8"
.XXXX=±.001"	>96" THRU 144"=±1/4"
	>144"=±3/8"
ANGULAR ±2°	(NC)=NO INSPECTION REQ'D

LOREN COOK CO.
MANUFACTURERS OF AIR MOVING EQUIPMENT
SPRINGFIELD, MISSOURI

CP WEATHER COVER CAP
CPV/CPS/CPF
HURRICANE RATED

SIZE	DRAWING NO.	REV.
B	SD130522-18	B

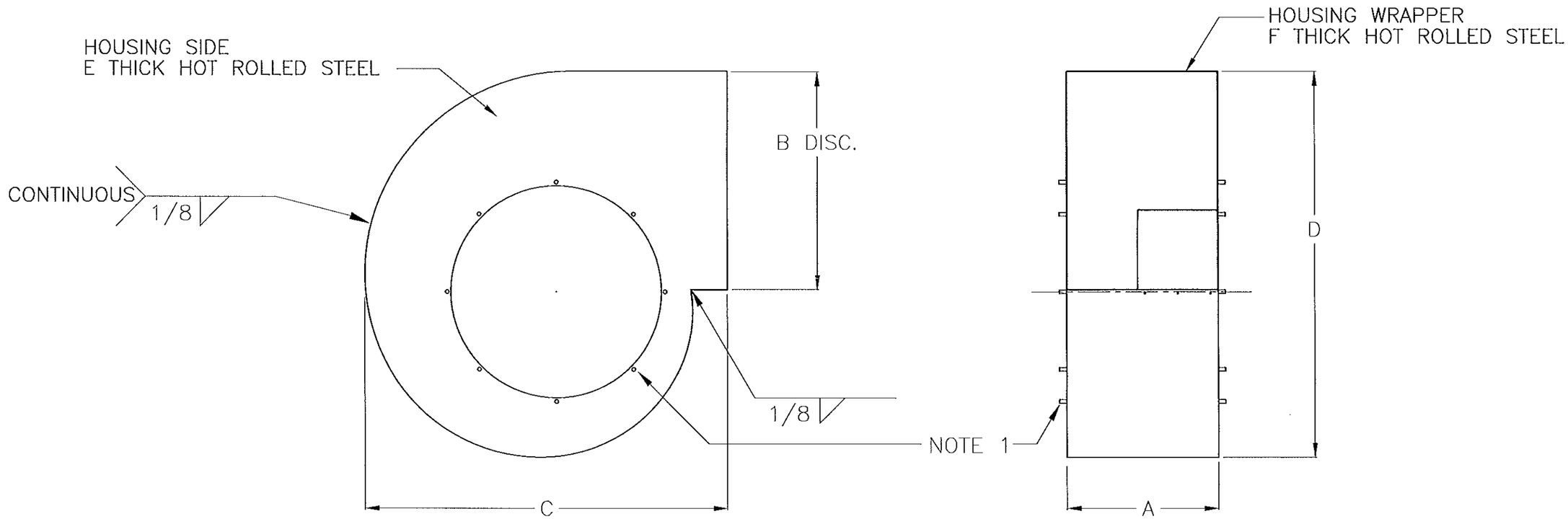

490	37 7/16	53 5/8	88 3/4	93 5/16	10 GA.	12 GA.
445	34	48 11/16	80 9/16	84 3/4	10 GA.	12 GA.
402	30 3/4	44 1/16	72 15/16	76 11/16	10 GA.	12 GA.
365	27 7/8	39 15/16	66 1/8	69 5/8	10 GA.	12 GA.
330	25 1/4	36 1/8	59 13/16	62 15/16	10 GA.	12 GA.
300	22 15/16	32 13/16	54 3/8	57	10 GA.	12 GA.
270	20 5/8	29 9/16	49 1/16	51 5/16	12 GA.	14 GA.
245/250	18 3/4	26 13/16	45 1/16	46 1/2	12 GA.	14 GA.
220/225	17 3/16	24 5/8	42	42 13/16	12 GA.	14 GA.
210	16 1/16	23	39 15/16	40 1/16	12 GA.	14 GA.
195	14 15/16	21 5/16	36 5/16	37 1/8	12 GA.	14 GA.
180	13 3/4	19 11/16	34 3/4	34 3/16	12 GA.	14 GA.
165	12 5/8	18 1/16	32 1/16	31 5/16	12 GA.	14 GA.
150	11 7/16	16 7/16	29 9/16	29 1/2	12 GA.	14 GA.
135	10 5/16	14 3/4	26 11/16	25 3/4	12 GA.	14 GA.
120	9 3/16	13 1/8	24 13/16	22 13/16	12 GA.	14 GA.
60-100	7 9/16	10 15/16	22 1/4	19	12 GA.	14 GA.
UNIT	A	B	C	D	E	F
SIZE	DIM	DIM	DIM	DIM	DIM	DIM

NOTES

1) 3/8-16 WELD NUT, C1008 STL, 8 PLACES, SIZES 60-300
1/2-13 WELD STUD, C1008 STL, 8 PLACES, SIZES 330-490
BOTH SIDES

Approved as complying with the
Florida Building Code
Date 12/9/2013
NOA# 13-0604.06
Miami Dade Product Control
By

BRADLEY F. SKIDMORE
LICENSE
NO. 74411
11/27/13
STATE OF FLORIDA
PROFESSIONAL ENGINEER

BRADLEY F. SKIDMORE P.E.
FL PE LIC. NO. 74411

MAT'L	HR STEEL – ASTM A1011	
DRAWN	BFS	5/22/13
DESIGNER	BFS	SHEET 7 OF 14

DO NOT SCALE DRAWING
TOLERANCES UNLESS OTHERWISE NOTED

DECIMAL	FRACTIONAL
.XX=±.063"	≤12"=±1/16"
.XXX=±.010"	>12" THRU 96"=±1/8"
.XXXX=±.001"	>96" THRU 144"=±1/4"
ANGULAR ±2°	>144"=±3/8"
	(NC)=NO INSPECTION REQ'D

LOREN COOK CO.®
MANUFACTURERS OF AIR MOVING EQUIPMENT
SPRINGFIELD, MISSOURI

CP FAN HOUSING
CPV/CPS/CPF
HURRICANE RATED

SIZE	DRAWING NO.	REV.
B	SD130522-18	B

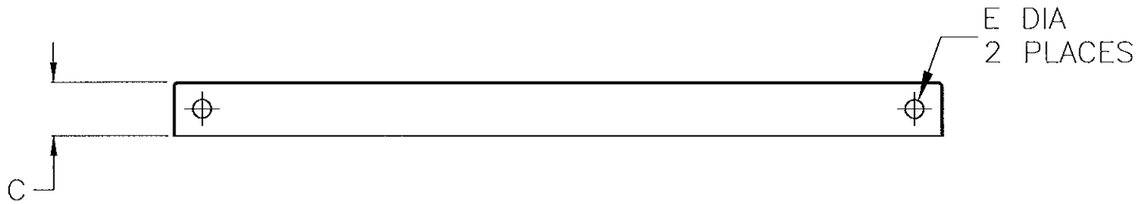

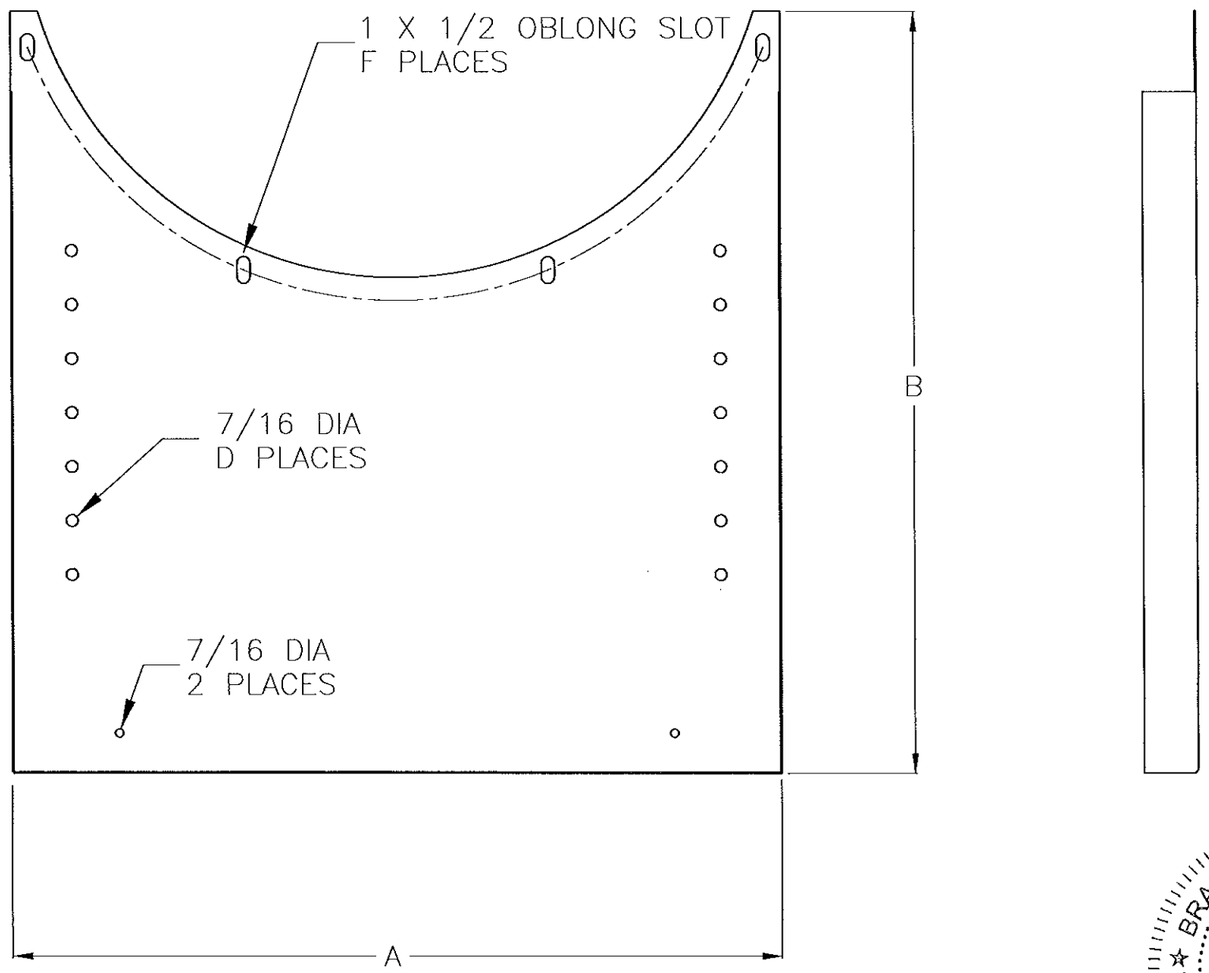

490	45 3/8	47 5/8	3	26	13/16	3	14 GA.
445	42 9/16	43 5/8	3	24	13/16	3	14 GA.
402	38 11/16	39 5/8	3	22	13/16	3	14 GA.
365	33 15/16	35 5/8	2	18	13/16	3	14 GA.
330	32 15/16	33 5/8	2	18	13/16	3	14 GA.
300	30 1/16	30 5/8	2	16	11/16	3	14 GA.
270	28 1/4	28 3/4	2	16	11/16	3	16 GA.
245/250	26 5/16	26 3/4	2	16	11/16	3	16 GA.
220/225	22 15/16	22 3/4	1 1/2	14	9/16	3	16 GA.
210	22	22 3/4	1 1/2	14	9/16	4	16 GA.
195	20 1/4	20 3/4	1 1/2	12	9/16	3	16 GA.
180	17 5/16	20 3/4	1 1/2	12	9/16	3	16 GA.
165	16 7/16	18 3/4	1 1/2	12	9/16	3	16 GA.
150	17 1/8	18 3/4	1 1/2	12	9/16	3	16 GA.
135	17	18 3/4	1 1/2	12	9/16	4	16 GA.
120	17	18 3/4	1 1/2	14	9/16	3	16 GA.
60–100	17	18 3/4	1 1/2	12	9/16	3	16 GA.
UNIT	A	B	C	D	E	F	MATERIAL
SIZE	DIM	DIM	DIM	DIM	DIM	DIM	GAUGE

Approved as complying with the
Florida Building Code
Date 12/19/2013
NOA# 13-0604.08
Miami Dade Product Control
By

BRADLEY F. SKIDMORE
LICENSE
No. 74411
STATE OF FLORIDA
PROFESSIONAL ENGINEER

BRADLEY F. SKIDMORE P.E.
FL PE LIC. NO. 74411

MAT'L	ASTM A1011 HR STEEL	
DRAWN	BFS	5/22/13
DESIGNER	BFS	SHEET 8 OF 14

DO NOT SCALE DRAWING
TOLERANCES UNLESS OTHERWISE NOTED

DECIMAL	FRACTIONAL
.XX=±.063"	≤12"=±1/16"
.XXX=±.010"	>12" THRU 96"=±1/8"
.XXXX=±.001"	>96" THRU 144"=±1/4"
	>144"=±3/8"
ANGULAR ±2°	(NC)=NO INSPECTION REQ'D

LOREN COOK CO.®
MANUFACTURERS OF AIR MOVING EQUIPMENT
SPRINGFIELD, MISSOURI

CP INLET PEDISTAL SIDE
CPV/CPS/CPF
HURRICANE RATED

SIZE	DRAWING NO.	REV.
B	SD130522–18	B

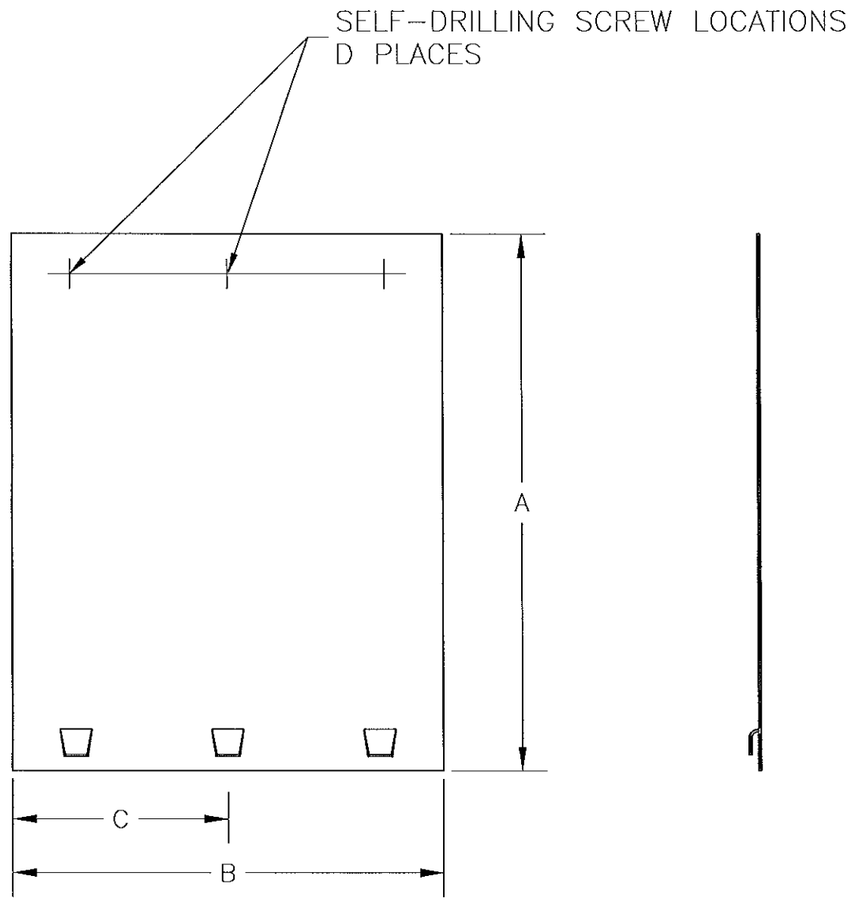

445–490	26 1/8	19 3/8	9 11/16	3	16
300–402	21 1/4	17	8 1/2	3	16
220–270	18 1/2	13	–	2	16
180–210	15 5/8	9	–	2	16
60–165	10 1/2	8 1/2	–	2	16
UNIT	A	B	C	D	MATERIAL
SIZE	DIM	DIM	DIM	DIM	GAUGE

Approved as complying with the
Florida Building Code
Date 12/19/2013
NOA# 13-0604.08
Miami Dade Product Control
By

BRADLEY F. SKIDMORE
LICENSE
NO. 74411
11/27/13
STATE OF
FLORIDA
PROFESSIONAL ENGINEER

BRADLEY F. SKIDMORE P.E.
FL PE LIC. NO. 74411

MAT'L	ASTM A1011 HR SHEET	
DRAWN	BFS	5/22/13
DESIGNER	BFS	SHEET 10 OF 14

DO NOT SCALE DRAWING

TOLERANCES UNLESS OTHERWISE NOTED

DECIMAL	FRACTIONAL
.XX=±.063"	≤12"=±1/16"
.XXX=±.010"	>12" THRU 96"=±1/8"
.XXXX=±.001"	>96" THRU 144"=±1/4"
	>144"=±3/8"
ANGULAR ±2°	(NC)=NO INSPECTION REQ'D

LOREN COOK CO.
MANUFACTURERS OF AIR MOVING EQUIPMENT
SPRINGFIELD, MISSOURI

CP PEDESTAL SIDE COVER
CPV/CPS/CPF
HURRICANE RATED

SIZE	DRAWING NO.	REV.
B	SD130522-18	B

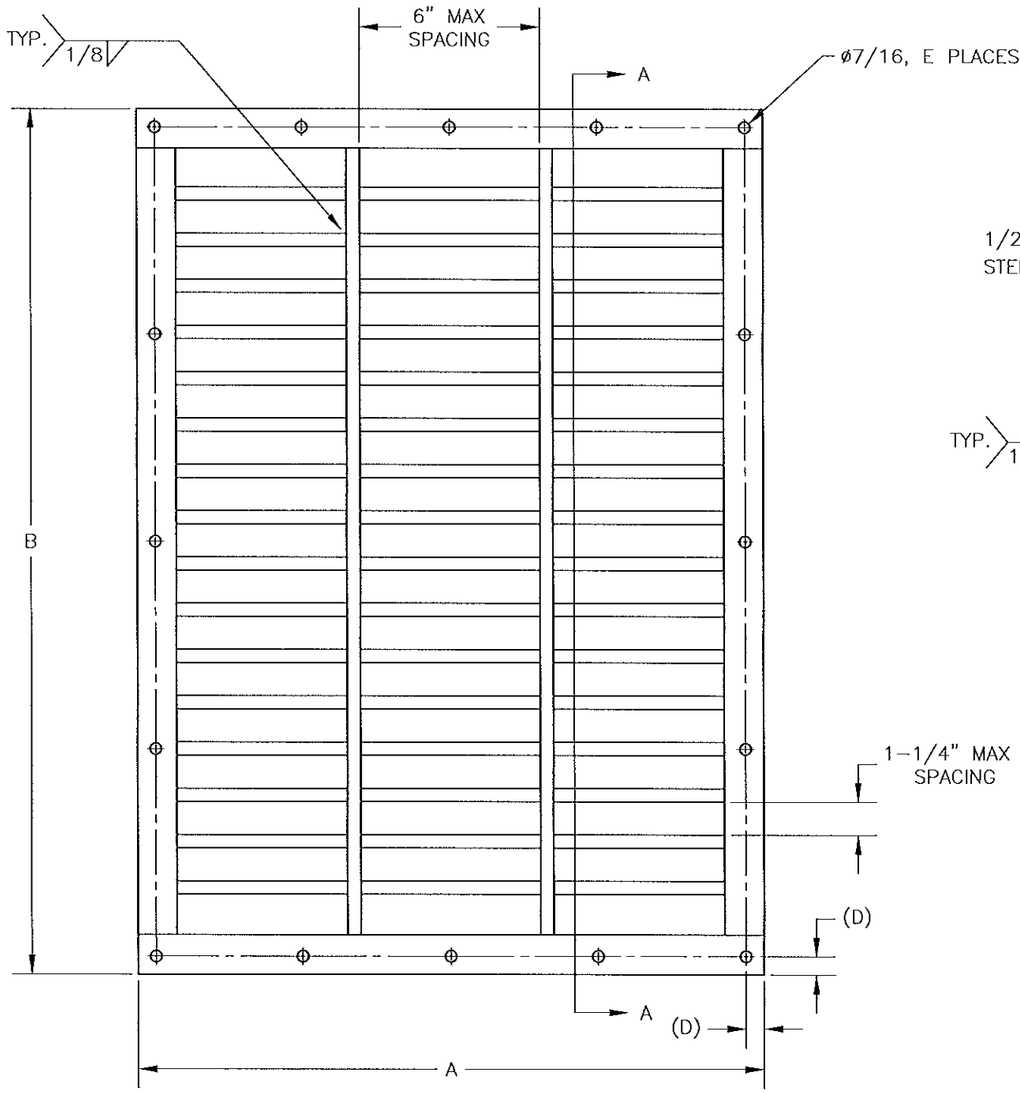

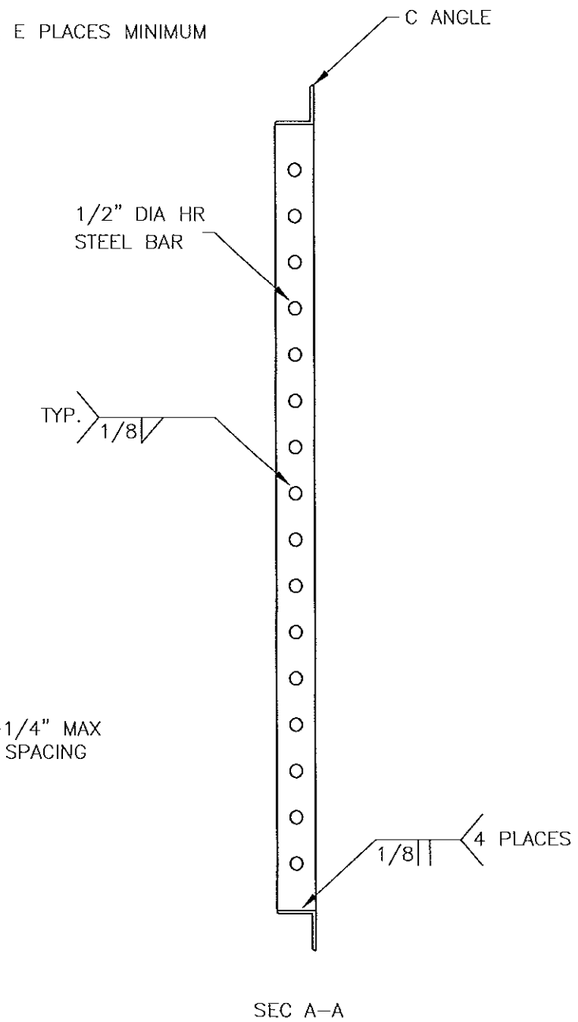

490	41 5/8	57 7/8	2 X 2 X 1/8 STEEL ANGLE	1 3/16	16
445	38 3/16	52 15/16	2 X 2 X 1/8 STEEL ANGLE	1 3/16	16
402	34 15/16	48 5/16	2 X 2 X 1/8 STEEL ANGLE	1 3/16	16
365	32 1/16	44 3/16	2 X 2 X 1/8 STEEL ANGLE	1 3/16	16
330	29 7/16	40 5/16	2 X 2 X 1/8 STEEL ANGLE	1 3/16	16
300	27 3/16	37	2 X 2 X 1/8 STEEL ANGLE	1 3/16	16
270	24 7/8	33 3/4	2 X 2 X 1/8 STEEL ANGLE	1 3/16	12
245/250	23	31	2 X 2 X 1/8 STEEL ANGLE	1 3/16	12
220/225	20 7/16	27 13/16	1 1/2 X 1 1/2 X 1/8 STEEL ANGLE	11/16	12
210	19 5/16	26 3/16	1 1/2 X 1 1/2 X 1/8 STEEL ANGLE	11/16	12
195	18 3/16	24 1/2	1 1/2 X 1 1/2 X 1/8 STEEL ANGLE	11/16	8
180	16 15/16	22 7/8	1 1/2 X 1 1/2 X 1/8 STEEL ANGLE	11/16	8
165	15 13/16	21 1/4	1 1/2 X 1 1/2 X 1/8 STEEL ANGLE	11/16	8
150	14 5/8	19 5/8	1 1/2 X 1 1/2 X 1/8 STEEL ANGLE	11/16	8
135	13 1/2	17 15/16	1 1/2 X 1 1/2 X 1/8 STEEL ANGLE	11/16	8
120	12 3/8	16 5/16	1 1/2 X 1 1/2 X 1/8 STEEL ANGLE	11/16	8
60-100	10 3/4	14 1/16	1 1/2 X 1 1/2 X 1/8 STEEL ANGLE	11/16	6
UNIT	A	B	C	D	E
SIZE	DIM	DIM	DIM	DIM	DIM

Approved as complying with the
Florida Building Code
Date 12/19/2013
NOA# 13-0604.08
Miami Dade Product Control
By

NOTES:
1. OUTLET GUARD REQUIRED WHEN FAN OUTLET IS EXPOSED TO OUTDOOR CONDITIONS.

BRADLEY F. SKIDMORE
LICENSE
NO. 74411
11/27/13
STATE OF FLORIDA
PROFESSIONAL ENGINEER

BRADLEY F. SKIDMORE P.E.
FL PE LIC. NO. 74411

MAT'L	ASTM A36	
DRAWN	BFS	5/22/13
DESIGNER	BFS	SHEET 11 OF 14

DO NOT SCALE DRAWING
TOLERANCES UNLESS OTHERWISE NOTED

DECIMAL	FRACTIONAL
.XX=±.063"	≤12"=±1/16"
.XXX=±.010"	>12" THRU 96"=±1/8"
.XXXX=±.001"	>96" THRU 144"=±1/4"
	>144"=±3/8"
ANGULAR ±2°	(NC)=NO INSPECTION REQ'D

LOREN COOK CO.
MANUFACTURERS OF AIR MOVING EQUIPMENT
SPRINGFIELD, MISSOURI

CP DISCHARGE GUARD
CPV/CPS/CPF
HURRICANE RATED

SIZE	DRAWING NO.	REV.
B	SD130522-18	B

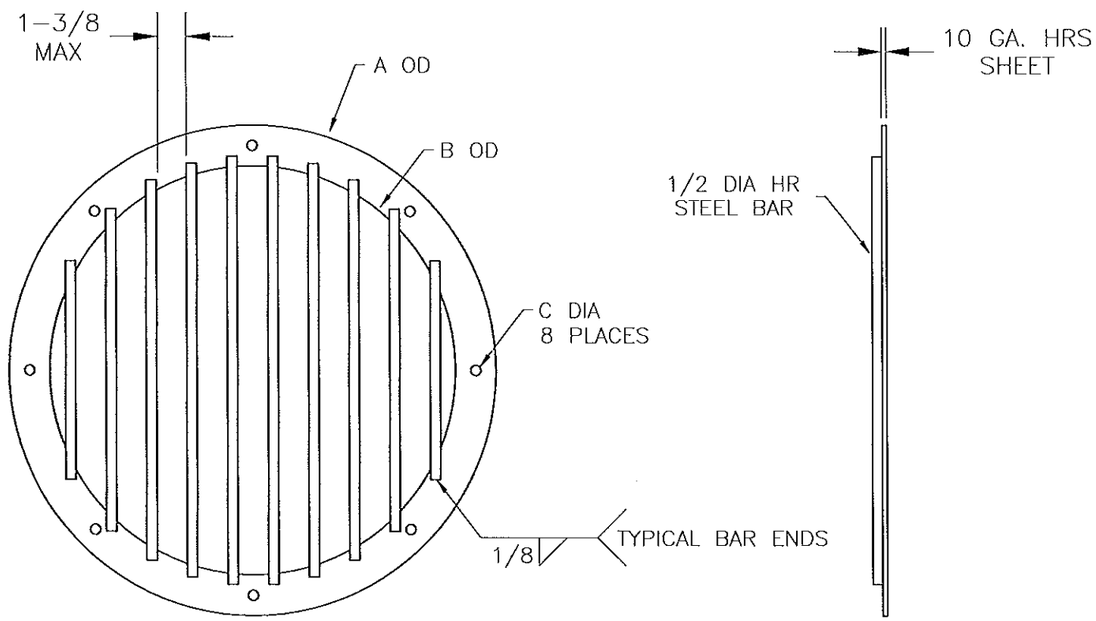

490	54 1/4	50 1/4	3/4
445	48 3/4	44 3/4	3/4
402	44 1/2	40 1/2	3/4
365	40 3/4	36 3/4	3/4
330	37 1/4	33 1/4	3/4
300	34 1/4	30 1/4	5/8
270	31 1/4	27 1/4	5/8
245/250	28 3/4	25 3/4	5/8
220/225	26 3/4	23 3/4	5/8
210	25 1/4	22 1/4	5/8
195	23 1/2	20 1/2	5/8
180	21 3/4	18 3/4	5/8
165	20 1/4	17 1/4	5/8
150	18 1/2	15 1/2	5/8
135	17	14	5/8
120	15 1/2	12 1/2	5/8
60-100	13 1/2	10 1/2	5/8
UNIT	A	B	C
SIZE	DIM	DIM	DIM

NOTES:
INLET GUARD REQUIRED WHEN FAN INLET IS EXPOSED TO OUTDOOR CONDITIONS.

Approved as complying with the Florida Building Code
Date 12/19/2013
NOA# 13-0604.08
Miami Dade Product Control
By

BRADLEY F. SKIDMORE
LICENSED
No. 74411
STATE OF FLORIDA
PROFESSIONAL ENGINEER

BRADLEY F. SKIDMORE P.E.
FL PE LIC. NO. 74411

MAT'L	ASTM A1011	
DRAWN	BFS	5/22/13
DESIGNER	BFS	SHEET 12 OF 14

DO NOT SCALE DRAWING
TOLERANCES UNLESS OTHERWISE NOTED

DECIMAL	FRACTIONAL
.XX=±.063"	≤12"=±1/16"
.XXX=±.010"	>12" THRU 96"=±1/8"
.XXXX=±.001"	>96" THRU 144"=±1/4"
	>144"=±3/8"
ANGULAR ±2'	(NC)=NO INSPECTION REQ'D

LOREN COOK CO.
MANUFACTURERS OF AIR MOVING EQUIPMENT
SPRINGFIELD, MISSOURI

CP INLET GUARD
CPV/CPS/CPF
HURRICANE RATED

SIZE	DRAWING NO.	REV.
B	SD130522-18	B

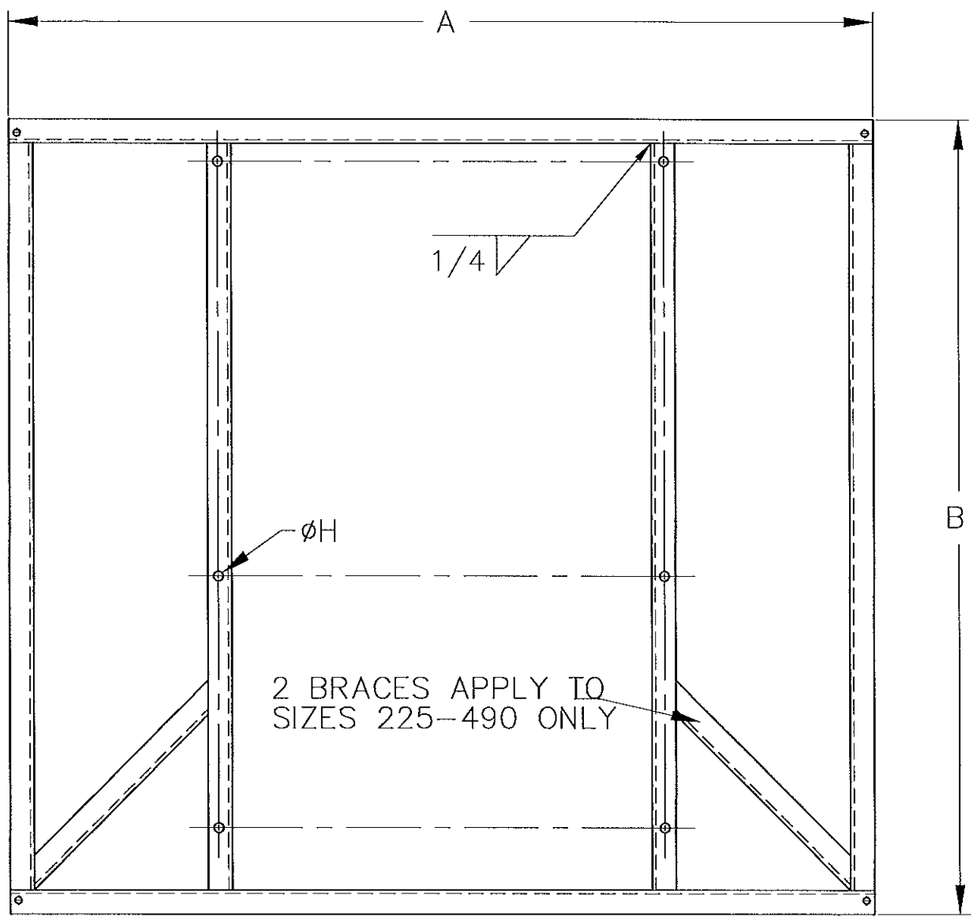

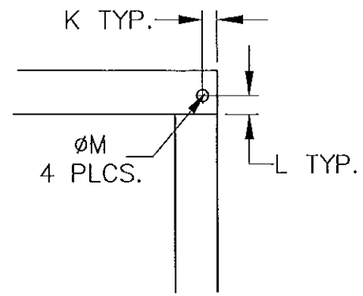

SIZE	A	B	H	K	L	M	CHANNEL
60–100	21–3/4	29–11/16	7/16	7/8	7/8	9/16	C3x4.1
120	26–1/8	31–5/16	7/16	7/8	7/8	9/16	C3x4.1
135	29–3/8	34–7/16	7/16	7/8	7/8	9/16	C3x4.1
150	32–5/8	35–9/16	7/16	7/8	7/8	9/16	C3x4.1
165	35–7/8	36–3/4	7/16	7/8	7/8	9/16	C3x4.1
180	39–1/8	37–15/16	7/16	7/8	7/8	9/16	C3x4.1
195	42–3/8	42–1/8	7/16	7/8	31/32	9/16	C4x5.4
210	45–5/8	44–1/4	9/16	7/8	31/32	9/16	C4x5.4
225	48–7/8	45–7/16	9/16	7/8	31/32	9/16	C4x5.4
245	53–1/4	47–7/16	9/16	7/8	31/32	9/16	C4x5.4
270	58–1/2	52–5/16	9/16	7/8	1	9/16	C5x6.7
300	65–1/4	55–5/16	9/16	7/8	1	9/16	C5x6.7
330	71–3/4	57–1/16	11/16	7/8	1	9/16	C5x6.7
365	79–3/8	63–5/8	11/16	7/8	1–1/8	9/16	C6x10.5
402	87–5/8	67–15/16	13/16	1–1/8	1–1/8	3/4	C6x10.5
445	97	75–3/16	13/16	1–1/8	1–1/8	3/4	C6x10.5
490	106–5/8	79	13/16	1–1/8	1–3/8	3/4	C8x11.5

Approved as complying with the
Florida Building Code
Date 12/19/2013
NOA# 13-0604.08
Miami Dade Product Control
By

BRADLEY F. SKIDMORE
LICENSE
No. 74411
5/22/13
STATE OF
FLORIDA
PROFESSIONAL ENGINEER

BRADLEY F. SKIDMORE P.E.
FL PE LIC. NO. 74411

MAT'L	ASTM A36	
DRAWN	BFS	5/22/13
DESIGNER	BFS	SHEET 13 OF 14

DO NOT SCALE DRAWING
TOLERANCES UNLESS OTHERWISE NOTED

DECIMAL	FRACTIONAL
.XX=±.063"	≤12"=±1/16"
.XXX=±.010"	>12" THRU 96"=±1/8"
.XXXX=±.001"	>96" THRU 144"=±1/4"
	>144"=±3/8"
ANGULAR ±2°	(NC)=NO INSPECTION REQ'D

LOREN COOK CO.®
MANUFACTURERS OF AIR MOVING EQUIPMENT
SPRINGFIELD, MISSOURI

CP RAILS AND BASE
CPV/CPS/CPF
HURRICANE RATED

SIZE	DRAWING NO.	REV.
B	SD130522–18	B

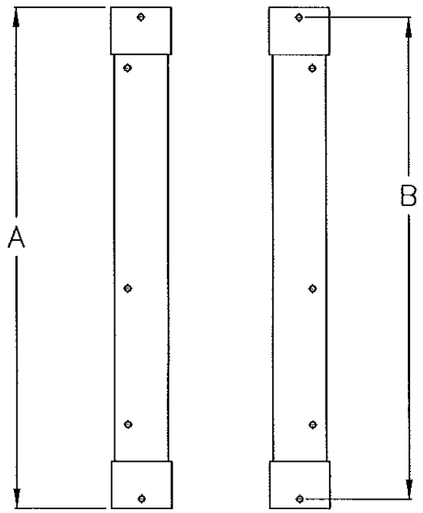

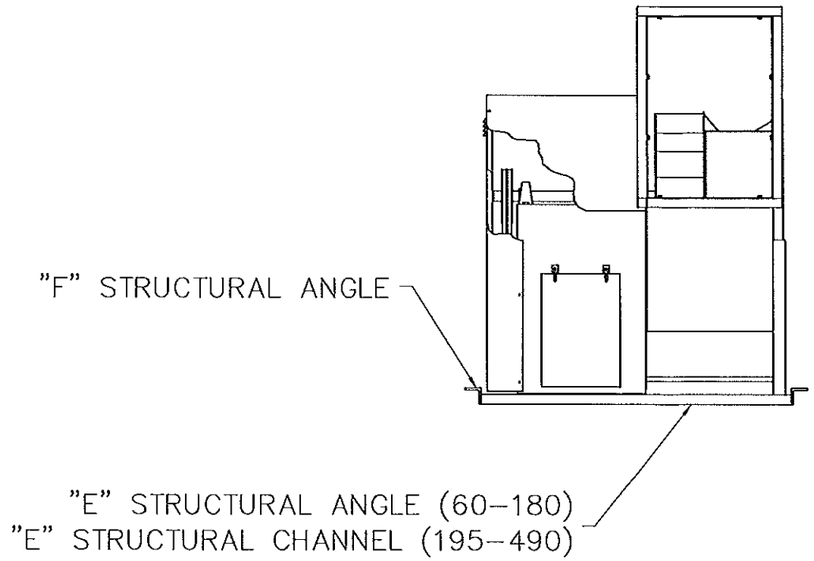

SIZE	A	B	C	D	E	F
60–100	33–7/8	31–7/8	5–1/2	9/16	2–1/2x2–1/2x1/4	3x3x1/4
120	35–1/2	33–1/2	4–1/2	9/16	2x3x1/4	3x3x1/4
135	38–5/8	36–5/8	4–1/2	9/16	2x3x1/4	3x3x1/4
150	39–3/4	37–3/4	4–1/2	9/16	2x3x1/4	3x3x1/4
165	40–15/16	38–15/16	4–1/2	9/16	2x3x1/4	3x3x1/4
180	42–1/16	40–1/16	4–1/2	9/16	2x3x1/4	3x3x1/4
195	46–1/4	44–1/4	4–1/2	9/16	W6x9	3x3x1/4
210	48–3/8	46–3/8	4–1/2	9/16	W6x9	3x3x1/4
225	49–1/2	47–1/2	4–1/2	9/16	W6x9	3x3x1/4
245	51–9/16	49–9/16	4–1/2	9/16	W6x9	3x3x1/4
270	60–7/16	56–11/16	4–1/2	11/16	W6x9	5x3x3/8
300	62–7/8	59–1/8	4–1/2	11/16	W6x9	5x3x3/8
330	65–3/16	61–7/16	4–1/2	11/16	W6x9	5x3x3/8
365	71–13/16	68–1/16	4–1/2	11/16	W6x9	5x3x3/8
402	75–11/16	72–11/16	4–1/2	11/16	W6x9	5x5x1/2
445	82–15/16	79–15/16	4–1/2	11/16	W6x9	5x5x1/2
490	86–3/8	83–3/8	4–1/2	11/16	W6x9	5x5x1/2

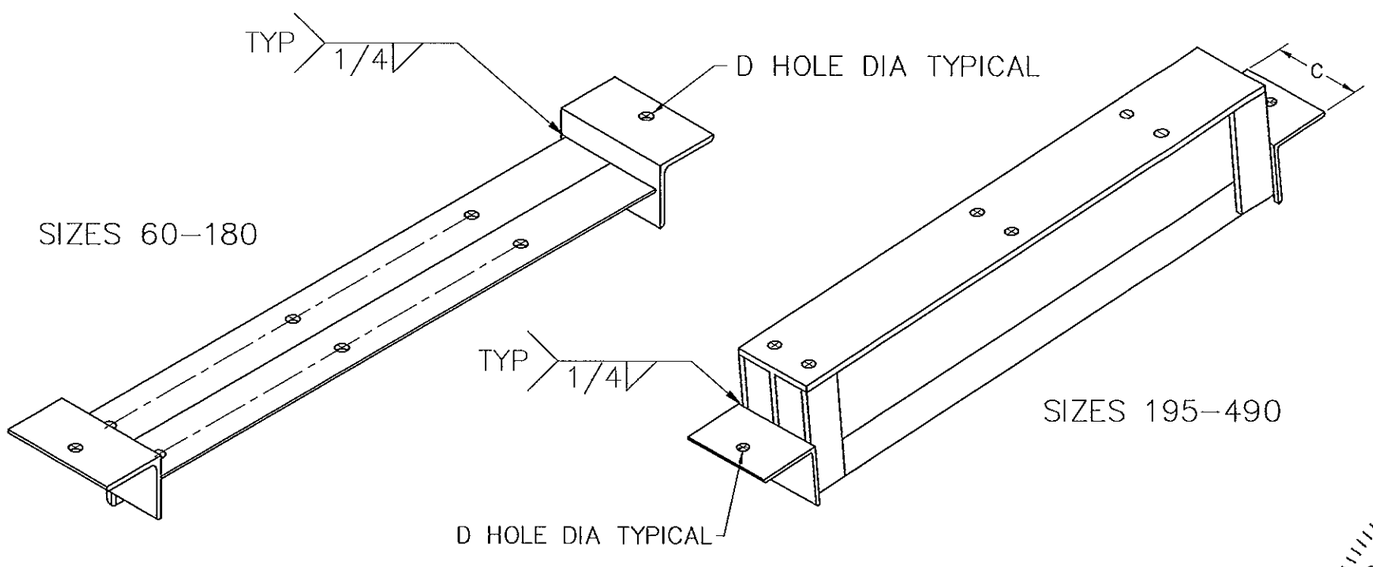

Approved as complying with the
Florida Building Code
Date 12/19/2013
NOA# 13-0604.08
Miami Dade Product Control
By

BRADLEY F. SKIDMORE
LICENSE
No. 74411
11/27/13
STATE OF FLORIDA
PROFESSIONAL ENGINEER

BRADLEY F. SKIDMORE P.E.
FL PE LIC. NO. 74411

MAT'L	ASTM A36	
DRAWN	BFS	5/22/13
DESIGNER	BFS	SHEET 14 OF 14

DO NOT SCALE DRAWING
TOLERANCES UNLESS OTHERWISE NOTED

DECIMAL	FRACTIONAL
.XX=±.063"	≤12"=±1/16"
.XXX=±.010"	>12" THRU 96"=±1/8"
.XXXX=±.001"	>96" THRU 144"=±1/4"
	>144"=±3/8"
ANGULAR ±2°	(NC)=NO INSPECTION REQ'D

LOREN COOK CO.
MANUFACTURERS OF AIR MOVING EQUIPMENT
SPRINGFIELD, MISSOURI

CP ISOLATION RAILS
CPV/CPS/CPF
HURRICANE RATED

SIZE	DRAWING NO.	REV.
B	SD130522–18	B