MIAMI-DADE COUNTY
DEPARTMENT OF REGULATORY AND ECONOMIC RESOURCES (RER)
BOARD AND CODE ADMINISTRATION DIVISION

MIAMI–DADE COUNTY, FLORIDA
PRODUCT CONTROL SECTION
11805 SW 26 Street, Room 208
T (786) 315–2590 F (786) 315–2599
www.miamidade.gov/economy

NOTICE OF ACCEPTANCE (NOA)

CGI Windows & Doors
10100 NW 25 Street
Miami, Fl. 33172

SCOPE:

This NOA is being issued under the applicable rules and regulations governing the use of construction materials. The documentation submitted has been reviewed and accepted by Miami–Dade County RER–Product Control Section to be used in Miami–Dade County and other areas where allowed by the Authority Having Jurisdiction (AHJ).

This NOA shall not be valid after the expiration date stated below. The Miami–Dade County Product Control Section (In Miami–Dade County) and/ or the AHJ (in areas other than Miami–Dade County) reserve the right to have this product or material tested for quality assurance purposes. If this product or material fails to perform in the accepted manner, the manufacturer will incur the expense of such testing and the AHJ may immediately revoke, modify, or suspend the use of such product or material within their jurisdiction. RER reserves the right to revoke this acceptance, if it is determined by Miami–Dade County Product Control Section that this product or material fails to meet the requirements of the applicable building code.

This product is approved as described herein, and has been designed to comply with the Florida Building Code, including the High Velocity Hurricane Zone.

DESCRIPTION: "Series–238" Aluminum Project–Out Window – L.M.I.

APPROVAL DOCUMENT: Drawing No. **W99–04**, titled "Series–238 Alum. Project Out Window", sheets 1, 1.1, 2, 3, 4, 5, 5.1, 6 and 7 of 9, dated 01/21/99 with revision "G" dated 07/31/13, prepared by Al–Farooq Corporation, signed and sealed by Javad Ahmad, P. E., bearing the Miami–Dade County Product Control Section Renewal stamp with the Notice of Acceptance number and Expiration date by the Miami–Dade County Product Control Section.

MISSILE IMPACT RATING: Large and Small Missile Impact Resistant

LIMITATIONS: Glass lites wider than 36" shall have two setting blocks per FBC requirements.

LABELING: Each unit shall bear a permanent label with the manufacturer's name or logo, city, state, model/series, and following statement: "Miami–Dade County Product Control Approved", unless otherwise noted herein.

REVISION of this NOA shall be considered after a renewal application has been filed and there has been no change in the applicable building code negatively affecting the performance of this product.

TERMINATION of this NOA will occur after the expiration date or if there has been a revision or change in the materials, use, and/or manufacture of the product or process. Misuse of this NOA as an endorsement of any product, for sales, advertising or any other purposes shall automatically terminate this NOA. Failure to comply with any section of this NOA shall be cause for termination and removal of NOA.

ADVERTISEMENT: The NOA number preceded by the words Miami–Dade County, Florida, and followed by the expiration date may be displayed in advertising literature. If any portion of the NOA is displayed, then it shall be done in its entirety.

INSPECTION: A copy of this entire NOA shall be provided to the user by the manufacturer or its distributors and shall be available for inspection at the job site at the request of the Building Official.

This NOA **renews NOA No. 12–0214.05** and consists of this page 1 and evidence pages E–1, E–2 and E–3, as well as approval document mentioned above.

The submitted documentation was reviewed by **Jaime D. Gascon, P. E.**

MIAMI-DADE COUNTY APPROVED

Jgascon 8/12/13

NOTICE OF ACCEPTANCE: EVIDENCE SUBMITTED

A. DRAWINGS

1. Manufacturer's die drawings and sections.
(Submitted under previous NOA No. 08–1010.03)

2. Drawing No. **W99–04**, titled "Series–238 Alum. Project–Out Window", sheets 01, 01.1, 02, 03, 04, 05, 05.1, 06 and 07 of 09, dated 01/21/99 with revision "**G**" dated 07/31/13, prepared by Al–Farooq Corporation, signed and sealed by Javad Ahmad, P. E.

B. TESTS

1. Test reports on:
1) Air Infiltration Test, per FBC, TAS 201–94
2) Uniform Static Air Pressure Test, Loading per FBC, TAS 202–94
3) Water Resistance Test, per FBC, TAS 202–94
4) Forced Entry Test, Type "B–A" hinged window, Grade 10, per FBC 2411 3.2.1, TAS 202–94, per ASTM F 588–04, AAMA 1302.5–04 and CAWM 301–04

along with marked–up drawings and installation diagram of aluminum casement, project–out and fixed windows, prepared by Hurricane Test Laboratory, Inc., Test Reports No.'s **HTL–0080–0301–07** and **HTL–0080–0905–07**, dated 08/08/08, all signed and sealed by Vinu J. Abraham, P. E.
(Submitted under previous NOA No. 08–1010.03)

2. Test reports on:
1) Large Missile Impact Test per FBC, TAS 201–94,
2) Cyclic Wind Pressure Loading per FBC, TAS 203–94,

along with marked–up drawings and installation diagram of an aluminum project– out window, prepared by Hurricane Engineering & Testing, Inc. Reports No.'s **HETI–08–2143**, **HETI–08–2144**, **HETI–07–4298** and **HETI–07–4287**, dated 06/27/08 and 07/17/08, all signed and sealed by Candido F. Font, P.E.
(Submitted under previous NOA No. 08–1010.03)

3. Test reports on:
1) Air Infiltration Test, per SFBC, PA 202–94
2) Uniform Static Air Pressure Test, Loading per SFBC, PA 202–94
3) Water Resistance Test, per SFBC, PA 202–94
4) Forced Entry Test, Type "B–A" hinged window, Grade 10, per SFBC 2411 3.2.1, PA 202–94, per ASTM F 588–94 and per AAMA 1302.5–76 Test "A" 3.1.1 through 3.1.3 Test "C"

along with marked–up drawings and installation diagram of aluminum casement, project–out and fixed windows, prepared by Fenestration Testing Laboratory, Inc., Test Reports No.'s **FTL–1055** and **FTL–1019**, dated 10/18/94, signed and sealed by Yamil Kuri, P. E.
(Submitted under previous NOA No. 96–0717.04)

Jaime D. Gascon, P. E.
Product Control Section Supervisor
NOA No. 13–0606.05
Expiration Date: October 31, 2018
Approval Date: August 15, 2013

NOTICE OF ACCEPTANCE: EVIDENCE SUBMITTED

B. TESTS (CONTINUED)

4. Test reports on: 1) Large Missile Impact Test per SFBC, PA 201–94,
2) Cyclic Wind Pressure Loading per SFBC, PA 203–94,
along with marked–up drawings and installation diagram of an aluminum casement Window, prepared by Hurricane Test Laboratory, Inc., Test Reports No.'s **HTL–0080–0303–96** and **HTL–0080–1107–98**, dated 09/08/96 and 12/23/98, all signed and sealed by Timothy S. Marshall, P.E.
(Submitted under previous NOA's No.'s 96–0717.04 and 99–0329.02)

C. CALCULATIONS

1. Anchor verification calculations and structural analysis, complying with **FBC–2010**, prepared by Al–Farooq Corporation, dated 02/01/12, signed and sealed by Javad Ahmad, P. E.
(Submitted under previous NOA No. 12–0214.05)

2. Glazing complies with ASTM E1300–04

D. QUALITY ASSURANCE

1. Miami–Dade Department of Regulatory and Economic Resources (RER).

E. MATERIAL CERTIFICATIONS

1. Notice of Acceptance No. **11–0624.02** issued to **E.I. DuPont DeNemours & Co.**, Inc. for their "**DuPont SentryGlas® Interlayer**" dated 08/25/11, expiring on 01/14/17.

2. Notice of Acceptance No. **12–1231.08** issued to **Eastman Chemical Company (MA)** for their "**Saflex CP – Saflex and Saflex HP Composite Glass Interlayers with PET Core**" dated 03/28/13, expiring on 12/11/18.

3. Notice of Acceptance No. **12–1231.10** issued to **Eastman Chemical Company (MA)** for their "**Saflex Clear and Color Glass Interlayers**" dated 03/28/13, expiring on 05/21/16.

F. STATEMENTS

1. Statement letter of no financial interest, conformance and complying with **FBC–2010**, issued by Al–Farooq Corporation, dated 05/06/13, signed and sealed by Javad Ahmad, P. E.

1. Laboratory compliance letters for Test Reports No.'s **HTL–0080–0301–07** and **HTL–0080–0905–07**, issued by Hurricane Test Laboratory, Inc., dated 08/08/08, all signed and sealed by Vinu J. Abraham, P. E.
(Submitted under previous NOA No. 08–1010.03)

Jaime D. Gascon, P. E.
Product Control Section Supervisor
NOA No. 13–0606.05
Expiration Date: October 31, 2018
Approval Date: August 15, 2013

NOTICE OF ACCEPTANCE: EVIDENCE SUBMITTED

F. STATEMENTS (CONTINUED)

2. Laboratory compliance letters for Test Reports No.'s **HETI–08–2143**, **HETI–08–2144**, **HETI–07–4298** and **HETI–07–4287**, issued by Hurricane Engineering & Testing, Inc., dated 06/27/08 and 07/17/08, all signed and sealed by Candido F. Font, P. E.
   (Submitted under previous NOA No. 08–1010.03)
3. Laboratory compliance letters for Test Reports No.'s **FTL–1055** and **FTL–1019**, issued by Fenestration Testing Laboratory, Inc., dated 10/18/94, signed and sealed by Yamil Kuri, P. E.
   (Submitted under previous NOA No. 96–0717.04)
4. Laboratory compliance letters for Test Reports No.'s **HTL–0080–0303–96** and **HTL–0080–1107–98**, issued by Hurricane Test Laboratory, Inc., dated 09/08/96 and 12/23/98, all signed and sealed by Timothy S. Marshall, P. E.
   (Submitted under previous NOA's No.'s 96–0717.04 and 99–0329.02)

G. OTHERS

1. Notice of Acceptance No. **12–0214.05**, issued to CGI Windows & Doors for their "Series 238 Aluminum Project–Out Window – L.M.I.", approved on 05/03/12 and expiring on 10/31/13.

Jaime D. Gascon, P. E.
Product Control Section Supervisor
NOA No. 13–0606.05
Expiration Date: October 31, 2018
Approval Date: August 15, 2013

GENERAL WINDOW SECTIONS
FLANGE FRAME

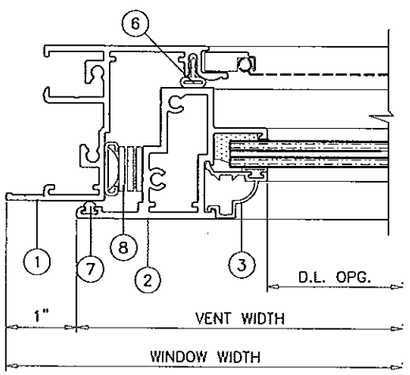

EXTERIOR

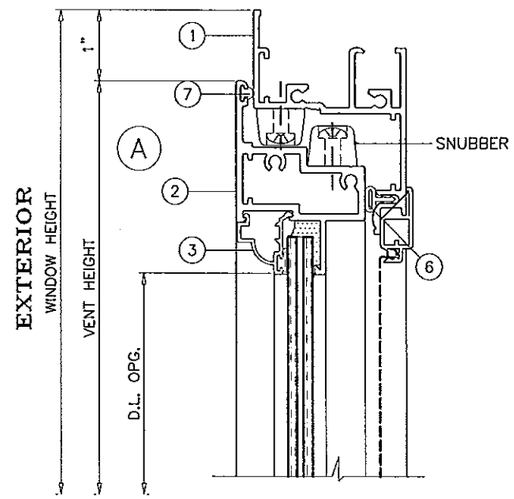

FOR GLASS TYPES, REFER TO SHEETS 3 AND 4.

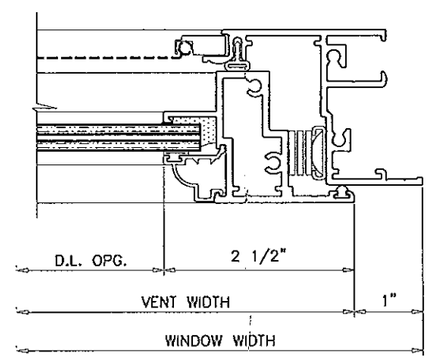

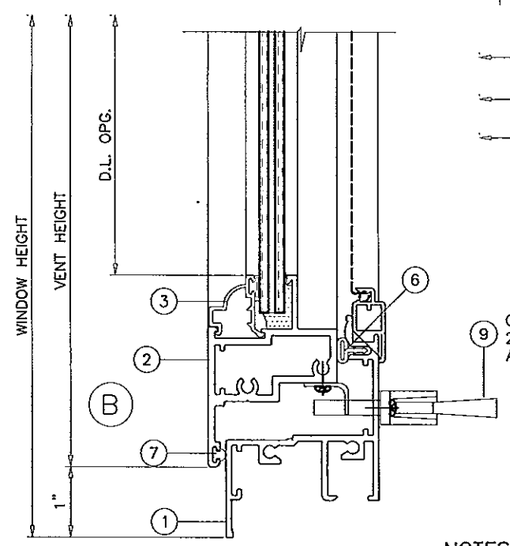

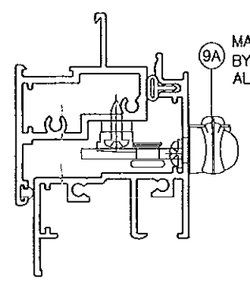

MAX. WDW. WIDTH	LOCK POINTS
42"	2
63"	3
84"	4

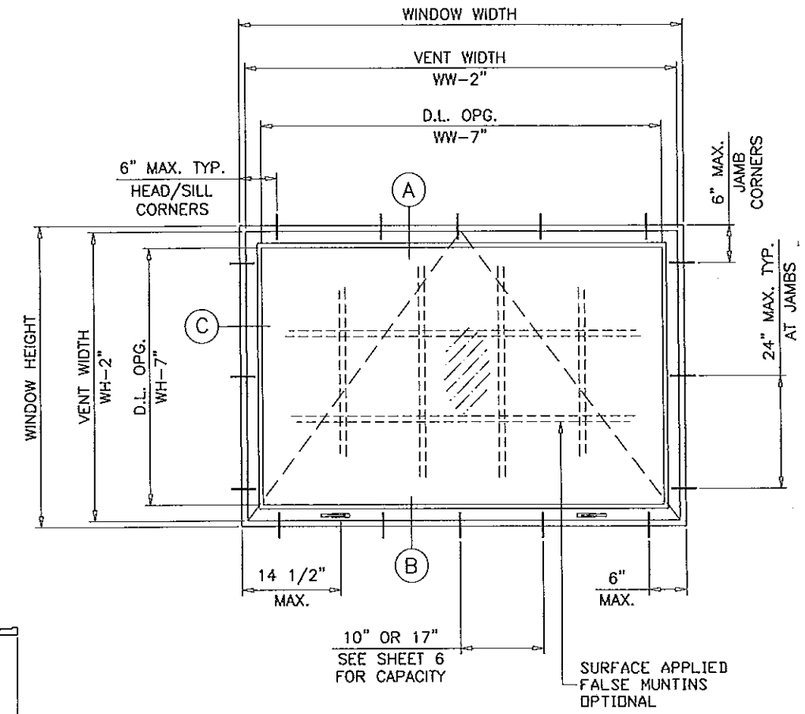

TYPICAL ELEVATION
(FLANGE FRAME)

PRODUCT RENEWED
as complying with the Florida
Building Code
Acceptance No 13-0606.05
Expiration Date ~~10/31/2018~~
By
Miami Dade Product Control

FOR MULLION/MULTIPLE UNITS, REFER TO SEPARATE CGI MULLION N.O.A.

THESE WINDOWS ARE RATED FOR LARGE MISSILE IMPACT. SHUTTERS ARE NOT REQUIRED.

INSTRUCTIONS:

USE CHARTS AS FOLLOWS.

STEP 1 DETERMINE DESIGN WIND LOAD REQUIREMENT BASED ON WIND VELOCITY, BLDG. HEIGHT, WIND ZONE USING APPLICABLE ASCE 7 STANDARD.

STEP 2 SEE CHARTS ON SHEETS 3 AND 4 FOR DESIGN LOAD CAPACITY OF DESIRED GLASS SIZE/TYPE.

STEP 3 USING CHART ON SHEET 6 SELECT ANCHOR OPTION WITH DESIGN RATING MORE THAN DESIGN LOAD SPECIFIED IN STEP 1 ABOVE.

STEP 4 IF ALUMINUM BUCK SYSTEM IS USED USE CHART ON SHEET 7 TO DETERMINE CAPACITY.

STEP 5 THE LOWEST VALUE RESULTING FROM STEPS 2, 3 AND 4 SHALL APPLY TO ENTIRE SYSTEM.

NOTES:

THIS PRODUCT HAS BEEN DESIGNED AND TESTED TO COMPLY WITH THE REQUIREMENTS OF THE FLORIDA BUILDING CODE INCLUDING HIGH VELOCITY HURRICANE ZONE (HVHZ).

WOOD BUCKS BY OTHERS, MUST BE ANCHORED PROPERLY TO TRANSFER LOADS TO THE STRUCTURE.

ANCHORS SHALL BE AS LISTED, SPACED AS SHOWN ON DETAILS, ANCHORS EMBEDMENT TO BASE MATERIAL SHALL BE BEYOND WALL DRESSING OR STUCCO.

ANCHORING OR LOADING CONDITIONS NOT SHOWN IN THESE DETAILS ARE NOT PART OF THIS APPROVAL.

A LOAD DURATION INCREASE IS USED IN DESIGN OF ANCHORS INTO WOOD ONLY.

MATERIALS INCLUDING BUT NOT LIMITED TO STEEL/METAL SCREWS, THAT COME INTO CONTACT WITH OTHER DISSIMILAR MATERIALS SHALL MEET THE REQUIREMENTS OF THE FLORIDA BLDG. CODE SECTION 2003.8.4.

Engr: JAVAD AHMAD
CIVIL
FLA. PE # 70592
C.A.N. 3538

AUG 01 2013

AL-FAROOQ CORPORATION
ENGINEERS & PRODUCT DEVELOPMENT
1235 S.W. 87 AVE
MIAMI, FLORIDA 33174
TEL. (305) 264-8100 FAX. (305) 262-6978

COMP-ANL\W99-04CGI

SERIES-238 ALUM PROJECT OUT WINDOW

CGI WINDOWS & DOORS
10100 N.W. 25TH STREET
MIAMI, FL. 33172
TEL. (305) 593-6590 FAX. (305) 593-6592

revisions:

no	date	by	description
C	11.11.06		NO CHANGE THIS SHEET
D	01.15.08		NO CHANGE THIS SHEET
E	09.22.08		GENERAL REV.
F	01.26.12		UPDATED TO 2010 FBC
G	07.31.13		NO CHANGE THIS SHEET

date: 01-21-99
scale: 1/2" = 1"
dr. by: HAMID
chk. by:

drawing no.
W99-04

GENERAL WINDOW SECTIONS
EQUAL LEG FRAME

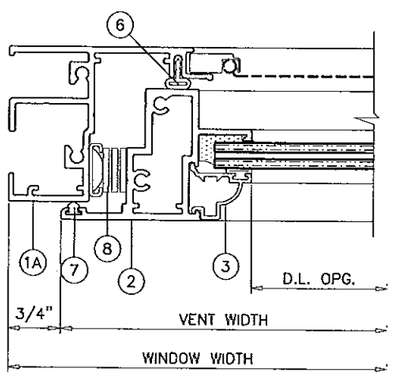

EXTERIOR

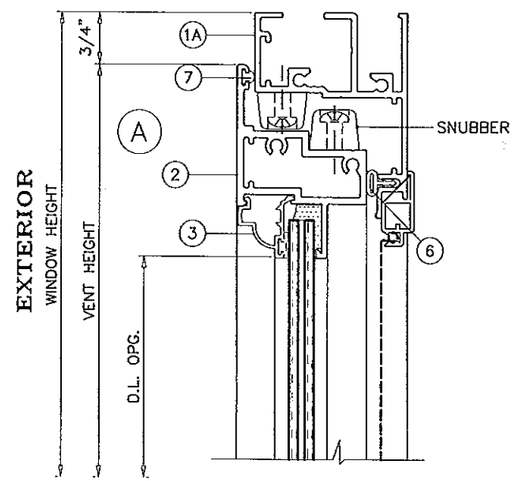

FOR GLASS TYPES, REFER TO SHEETS 3 AND 4.

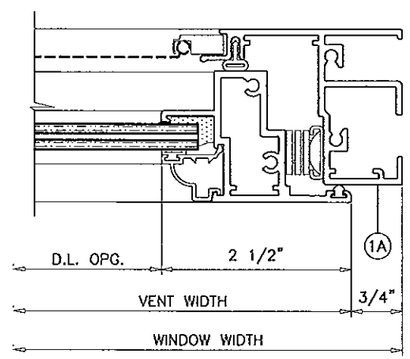

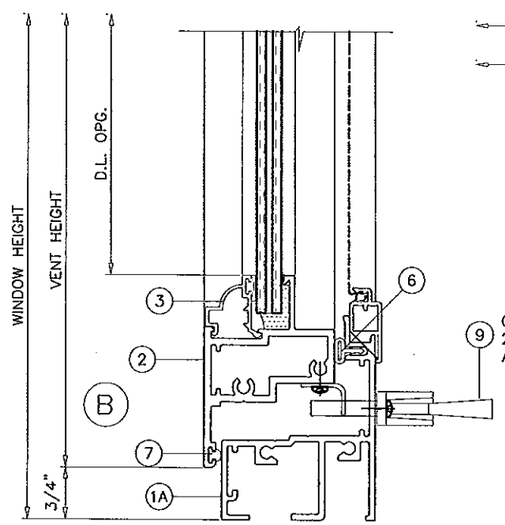

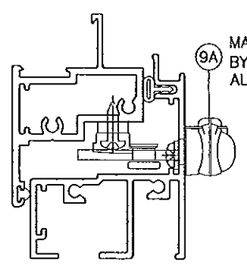

MAX. WDW. WIDTH	LOCK POINTS
42"	2
63"	3
84"	4

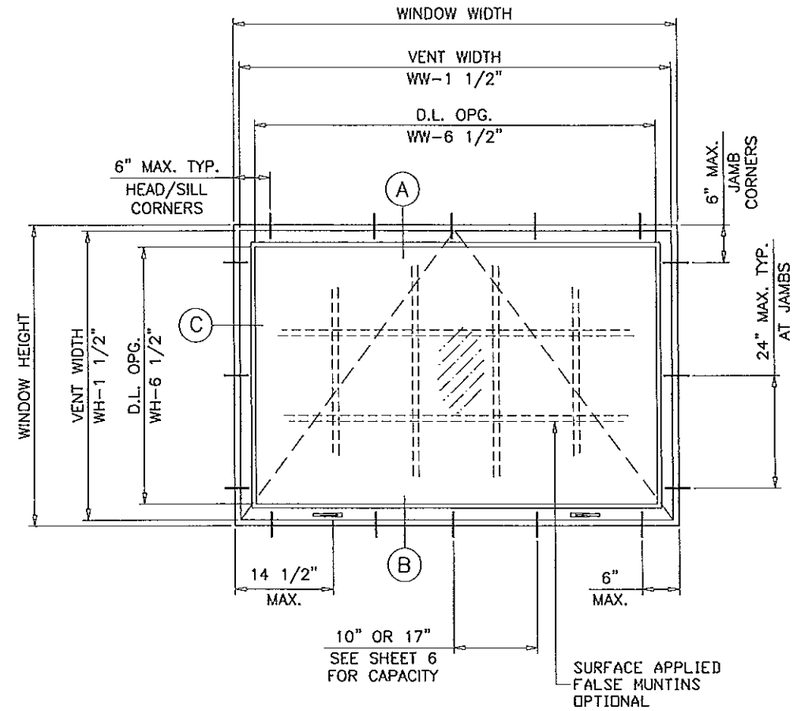

TYPICAL ELEVATION
(EQUAL LEG FRAME)

PRODUCT RENEWED
as complying with the Florida
Building Code
Acceptance No 13-0606.05
Expiration Date 10/31/2013
By
Miami Dade Product Control

Engr: JAVAD AHMAD
CIVIL
FLA. PE # 70592
C.A.N. 3538
AUG 01 2013

AL-FAROOQ CORPORATION
ENGINEERS & PRODUCT DEVELOPMENT
1235 S.W. 87 AVE
MIAMI, FLORIDA 33174
TEL. (305) 264-8100 FAX. (305) 262-6978
COMP-ANL\W99-04CGI

SERIES-238 ALUM PROJECT OUT WINDOW

CGI WINDOWS & DOORS
10100 N.W. 25TH STREET
MIAMI, FL. 33172
TEL. (305) 593-6590 FAX. (305) 593-6592

revisions:

no	date	by	description
E	09.22.08		GENERAL REV.
F	01.26.12		NO CHANGE THIS SHEET
G	07.31.13		NO CHANGE THIS SHEET

date: 01-21-99
scale: 1/2" = 1"
dr. by: HAMID
chk. by:

drawing no.
W99-04

sheet 1.1 of 7

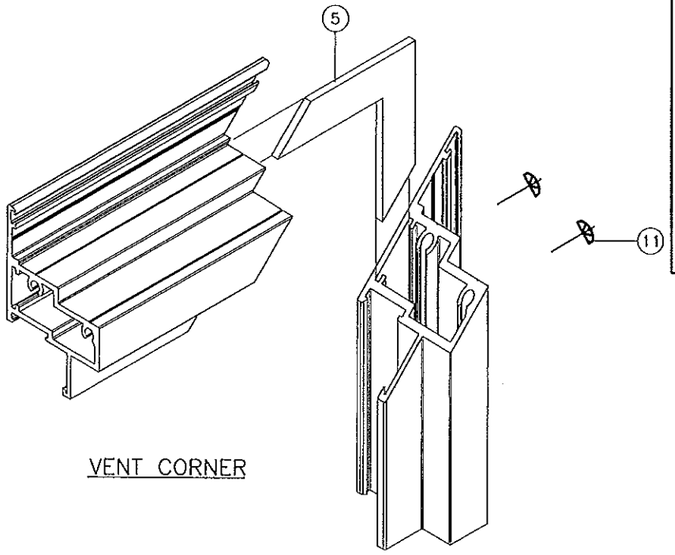

VENT CORNER

ALL FRAME AND VENT CORNERS TO BE SEALED WITH GE SILPRUF OR EQUIV.

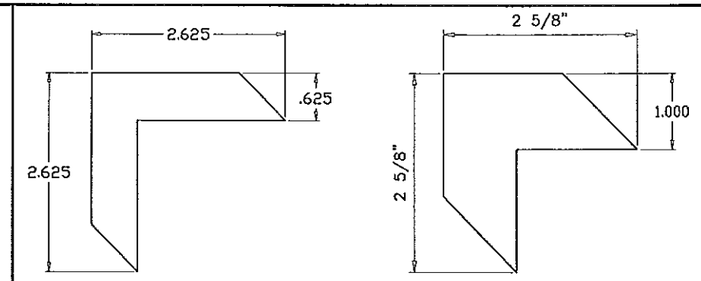

CORNER KEY
.060 THICK ST. STEEL

CORNER KEY
.062 THICK ALUMINUM

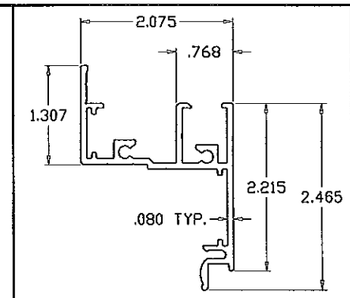

FLANGE FRAME

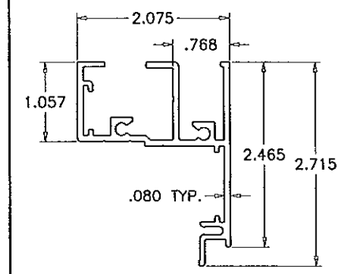

EQUAL LEG FRAME

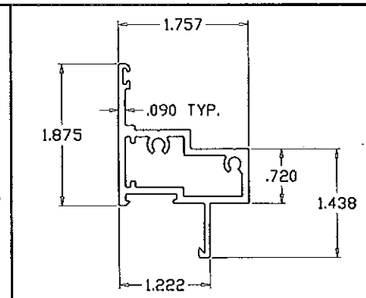

VENT (5/16" LAM. GLASS)

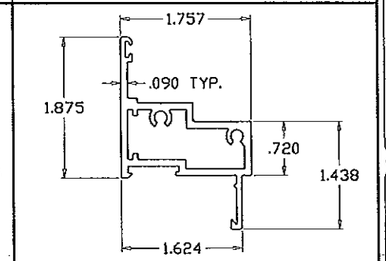

VENT (INSUL. LAM. GLASS)

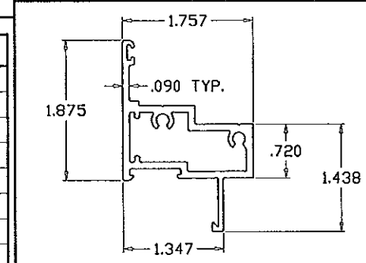

VENT (7/16" LAM. GLASS)

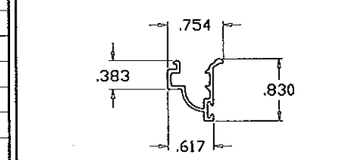

CGI-375: OGEE GLAZING STOP

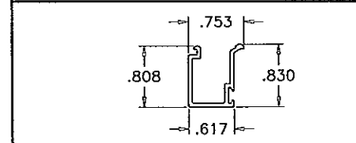

CGI-396: SQUARE GLAZING STOP

ITEM	PART #	QUANTITY	DESCRIPTION	MATERIAL	MANF./SUPPLIER/REMARKS
1	CGI-373	4	FLANGE FRAME	6063-T6	INDALEX OR EQUIV.
1A	CGI-397	4	EQUAL LEG FRAME	6063-T6	INDALEX OR EQUIV.
2	CGI-378	4	VENT (5/16" LAM. GLASS)	6063-T6	INDALEX OR EQUIV.
2B	CGI-381	4	VENT (INSUL. LAM. GLASS)	6063-T6	INDALEX OR EQUIV.
2C	CGI-385	4	VENT (7/16" LAM. GLASS)	6063-T6	INDALEX OR EQUIV.
3	CGI-375	4	OGEE GLAZING BEAD	6063-T5	INDALEX OR EQUIV.
3A	CGI-396	4	SQUARE GLAZING BEAD	6063-T5	INDALEX OR EQUIV.
4	–	4	.060 THICK CORNER KEY	ALUMINUM	–
5	–	8	.060 THICK CORNER KEY	ST. STEEL	–
6	AP-425	AS REQD.	FRAME WEATHERSTRIPPING	–	SCHLEGEL APTUS
7	Q200 X190	AS REQD.	VENT WEATHERSTRIPPING	–	SCHLEGEL Q-LON
8	35-10-00-101	2/ VENT	4 BAR HINGE, AT JAMBS	STEEL	TRUTH, ATTACHED W/ (6) #8 X 3/8" SS SMS
9	24-13-00-202	2/ VENT	FACE MOUNT LOCK	STEEL	TRUTH, ATTACHED W/ (2) #8 X 3/8" SS SMS
9A	–	2/ VENT	MULTI POINT LOCK	–	–
10	–	2/ VENT	.110 THICK LOCK KEEPER, AT FRAME JAMB FACING LOCK	STEEL	CGI, ATTACHED W/ (2) #10 X 3/8" SS SMS
11	–	2/ CORNER	FRAME AND VENT ASSEMBLY SCREWS	–	#10 X 1-1/4" SS SMS

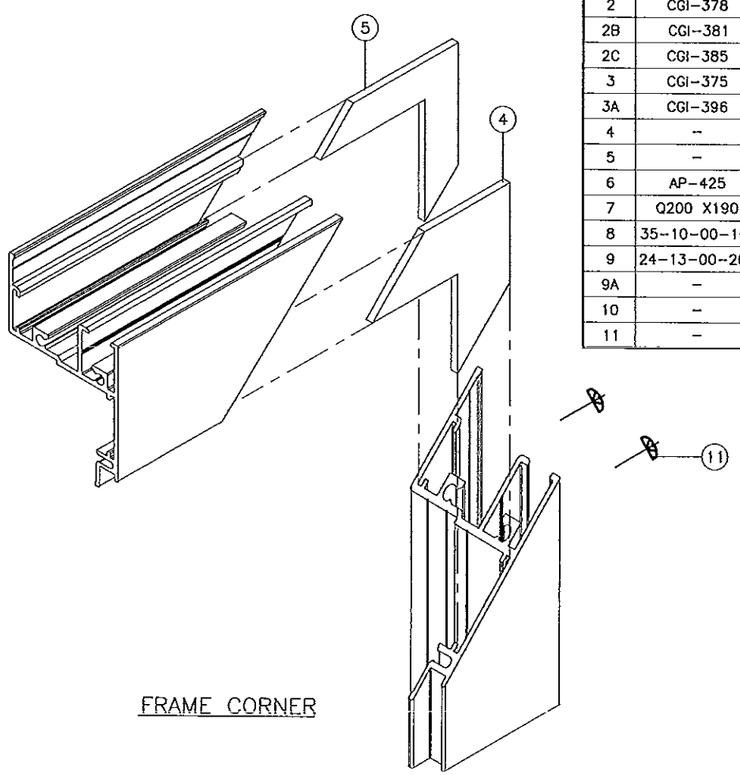

FRAME CORNER

PRODUCT RENEWED
as complying with the Florida
Building Code
Acceptance No. 13-0606.05
Expiration Date 10/31/2018
By
Miami Dade Product Control

Engr: JAVAD AHMAD
CIVIL
FLA. PE # 70592
C.A.# 3548

AUG 01 2013

AL-FAROOQ CORPORATION
ENGINEERS & PRODUCT DEVELOPMENT
1235 S.W. 87 AVE
MIAMI, FLORIDA 33174
TEL. (305) 264-8100 FAX. (305) 262-6978
COMP-ANL\W99-04CGI

SERIES-238 ALUM PROJECT OUT WINDOW

CGI WINDOWS & DOORS
10100 N.W. 25TH STREET
MIAMI, FL. 33172
TEL. (305) 593-6590 FAX. (305) 593-6592

revisions:

no	date	by	description
C	11.11.06		NO CHANGE THIS SHEET
D	01.15.08		NO CHANGE THIS SHEET
E	09.22.08		GENERAL REV.
F	01.26.12		NO CHANGE THIS SHEET
G	07.31.13		NO CHANGE THIS SHEET

date: 01-21-99
scale: 1/2" = 1"
dr. by: HAMID
chk. by:

drawing no.
W99-04

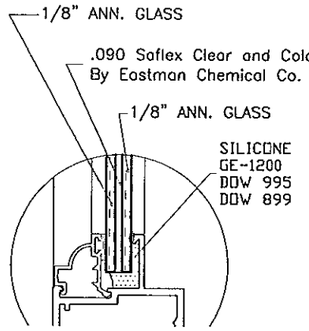

5/16" NOMINAL
GLASS TYPE '2'

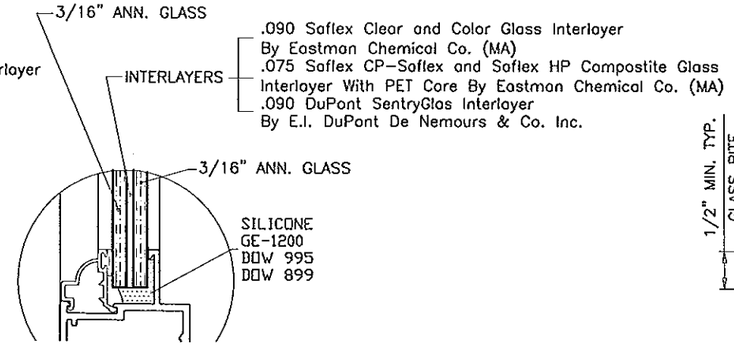

7/16" NOMINAL
GLASS TYPE '3'

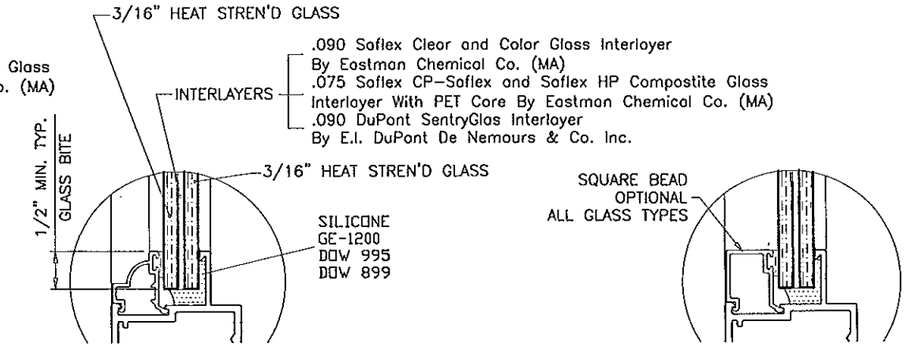

7/16" NOMINAL
GLASS TYPE '6'

PERFORMANCE VALUES OF IMPACT RESISTANT WINDOWS
NO SHUTTERS REQUIRED
REFER TO SHEETS 5 THRU 7 FOR INSTALLATION DETAILS

WINDOW DIMS.		GLASS TYPE '2'		GLASS TYPE '3'		GLASS TYPE '6'	
WIDTH	HEIGHT	EXT. (+)	INT. (−)	EXT. (+)	INT. (−)	EXT. (+)	INT. (−)
24"	24"	110.0	195.0	110.0	195.0	110.0	195.0
	28"	110.0	195.0	110.0	195.0	110.0	195.0
	30"	110.0	194.3	110.0	195.0	110.0	195.0
	36"	110.0	161.9	110.0	195.0	110.0	195.0
	42"	110.0	138.8	110.0	195.0	110.0	195.0
	48"	110.0	121.4	110.0	195.0	110.0	195.0
	54"	107.9	107.9	110.0	195.0	110.0	195.0
	60"	95.4	95.4	110.0	195.0	110.0	120.0
	66"	73.4	73.4	110.0	120.0	110.0	120.0
	72"	56.1	56.1	110.0	120.0	110.0	120.0
	78"	43.8	43.8	110.0	120.0	110.0	120.0
	84"	34.9	34.9	110.0	120.0	110.0	120.0
30"	24"	110.0	194.3	110.0	195.0	110.0	195.0
	28"	110.0	166.5	110.0	195.0	110.0	195.0
	30"	110.0	155.4	110.0	195.0	110.0	195.0
	36"	110.0	129.5	110.0	195.0	110.0	195.0
	42"	110.0	111.0	110.0	195.0	110.0	195.0
	48"	97.1	97.1	110.0	195.0	110.0	120.0
	54"	86.3	86.3	110.0	120.0	110.0	120.0
	60"	77.7	77.7	110.0	120.0	110.0	120.0
	66"	60.6	60.6	110.0	120.0	110.0	120.0
	72"	46.0	46.0	110.0	120.0	110.0	120.0
	78"	–	–	110.0	120.0	–	–
36"	24"	110.0	161.9	110.0	195.0	110.0	195.0
	28"	110.0	138.8	110.0	195.0	110.0	195.0
	30"	110.0	129.5	110.0	195.0	110.0	195.0
	36"	107.9	107.9	110.0	195.0	110.0	195.0
	42"	92.5	92.5	110.0	120.0	110.0	120.0
	48"	80.9	80.9	110.0	120.0	110.0	120.0
	54"	71.9	71.9	110.0	120.0	110.0	120.0
	60"	64.8	64.8	110.0	120.0	110.0	120.0
42"	24"	110.0	138.8	110.0	195.0	110.0	195.0
	28"	110.0	118.9	110.0	195.0	110.0	195.0
	30"	110.0	111.0	110.0	195.0	110.0	195.0
	36"	92.5	92.5	110.0	120.0	110.0	120.0
	42"	79.3	79.3	110.0	120.0	110.0	120.0
	48"	69.4	69.4	110.0	120.0	110.0	120.0
	54"	61.7	61.7	110.0	120.0	110.0	120.0

PERFORMANCE VALUES OF IMPACT RESISTANT WINDOWS
NO SHUTTERS REQUIRED
REFER TO SHEETS 5 THRU 7 FOR INSTALLATION DETAILS

WINDOW DIMS.		GLASS TYPE '2'		GLASS TYPE '3'		GLASS TYPE '6'	
WIDTH	HEIGHT	EXT. (+)	INT. (−)	EXT. (+)	INT. (−)	EXT. (+)	INT. (−)
48"	24"	110.0	121.4	110.0	195.0	110.0	195.0
	28"	104.1	104.1	110.0	195.0	110.0	120.0
	30"	97.1	97.1	110.0	195.0	110.0	120.0
	36"	80.9	80.9	110.0	120.0	110.0	120.0
	42"	69.4	69.4	110.0	120.0	110.0	120.0
	48"	60.7	60.7	110.0	120.0	110.0	120.0
54"	24"	107.9	107.9	110.0	195.0	110.0	195.0
	28"	92.5	92.5	110.0	120.0	110.0	120.0
	30"	86.3	86.3	110.0	120.0	110.0	120.0
	36"	71.9	71.9	110.0	120.0	110.0	120.0
	42"	61.7	61.7	110.0	120.0	110.0	120.0
60"	24"	95.4	95.4	110.0	195.0	110.0	120.0
	28"	83.3	83.3	110.0	120.0	110.0	120.0
	30"	77.7	77.7	110.0	120.0	110.0	120.0
	36"	64.8	64.8	110.0	120.0	110.0	120.0
66"	24"	73.4	73.4	110.0	120.0	110.0	120.0
	28"	64.2	64.2	110.0	120.0	110.0	120.0
	30"	60.6	60.6	110.0	120.0	110.0	120.0
72"	24"	56.1	56.1	110.0	120.0	110.0	120.0
	28"	48.9	48.9	110.0	120.0	110.0	120.0
	30"	46.0	46.0	110.0	120.0	110.0	120.0
78"	24"	43.8	43.8	110.0	120.0	110.0	120.0
	28"	38.1	38.1	110.0	120.0	110.0	120.0
	30"	–	–	110.0	120.0	–	–
84"	24"	34.9	34.9	110.0	120.0	110.0	120.0
	28"	–	–	110.0	120.0	–	–

PERFORMANCE VALUES OF IMPACT RESISTANT WINDOWS
NO SHUTTERS REQUIRED
REFER TO SHEETS 5 THRU 7 FOR INSTALLATION DETAILS

WINDOW DIMS.		GLASS TYPE '2'		GLASS TYPE '3'		GLASS TYPE '6'	
WIDTH	HEIGHT	EXT. (+)	INT. (−)	EXT. (+)	INT. (−)	EXT. (+)	INT. (−)
19-1/8"	26"	110.0	195.0	110.0	195.0	110.0	195.0
	38-3/8"	110.0	190.6	110.0	195.0	110.0	195.0
	50-5/8"	110.0	144.5	110.0	195.0	110.0	195.0
	63"	104.2	104.2	110.0	195.0	110.0	195.0
	74-1/4"	63.0	63.0	110.0	195.0	110.0	120.0
26-1/2"	26"	110.0	195.0	110.0	195.0	110.0	195.0
	38-3/8"	110.0	137.5	110.0	195.0	110.0	195.0
	50-5/8"	104.3	104.3	110.0	195.0	110.0	195.0
	63"	77.9	77.9	110.0	120.0	110.0	120.0
	74-1/4"	46.6	46.6	110.0	120.0	110.0	120.0
37"	26"	110.0	145.4	110.0	195.0	110.0	195.0
	38-3/8"	98.5	98.5	110.0	194.5	110.0	120.0
	50-5/8"	74.7	74.7	110.0	120.0	110.0	120.0
	63"	60.0	60.0	110.0	120.0	110.0	120.0
42"	26"	110.0	128.1	110.0	195.0	110.0	195.0
	38-3/8"	86.8	86.8	110.0	120.0	110.0	120.0
	50-5/8"	65.8	65.8	110.0	120.0	110.0	120.0
53-1/8"	26"	101.3	101.3	110.0	195.0	110.0	120.0
	38-3/8"	68.6	68.6	110.0	120.0	110.0	120.0

NOTE:
LOAD/AREA LIMITS
FOR +110.0, −120.0 PSF = 16.34 SQ. FT.
+110.0, −195.0 PSF = 10.00 SQ. FT.

PRODUCT RENEWED
as complying with the Florida
Building Code
Acceptance No 13-0606.05
Expiration Date 12/31/2018
By
Miami Dade Product Control

NOTE:
GLASS CAPACITIES ON THIS SHEET ARE
BASED ON ASTM E1300-04 (3 SEC. GUSTS)
AND FLORIDA BUILDING COMMISSION
DECLARATORY STATEMENT DCA05-DEC-219

Engr: JAVAD AHMAD
CIVIL
FLA. PE # 70592
C.A.N. 3538
AUG 01 2013

AL-FAROOQ CORPORATION
ENGINEERS & PRODUCT DEVELOPMENT
1235 S.W. 87 AVE
MIAMI, FLORIDA 33174
TEL. (305) 264-8100 FAX. (305) 262-6978
COMP-ANL\W99-04CGI

SERIES-238 ALUM PROJECT OUT WINDOW

CGI WINDOWS & DOORS
10100 N.W. 25TH STREET
MIAMI, FL. 33172
TEL. (305) 593-6590 FAX. (305) 593-6592

revisions:

no	date	by	description
C	11.11.06		NO CHANGE THIS SHEET
D	01.15.08		NO CHANGE THIS SHEET
E	09.22.08		GENERAL REV.
F	01.26.12		UPDATED TO 2010 FBC
G	07.31.13		REV. PER RER COMMENTS

date: 01-21-99
scale: 1/2" = 1"
dr. by: HAMID
chk. by:

drawing no.
W99-04

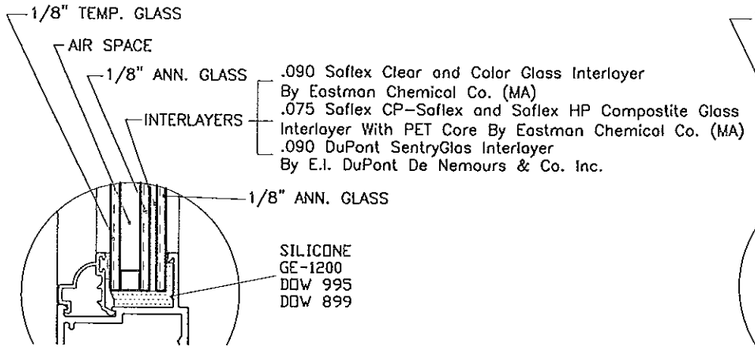

3/4" INSULATED
GLASS TYPE '2A'

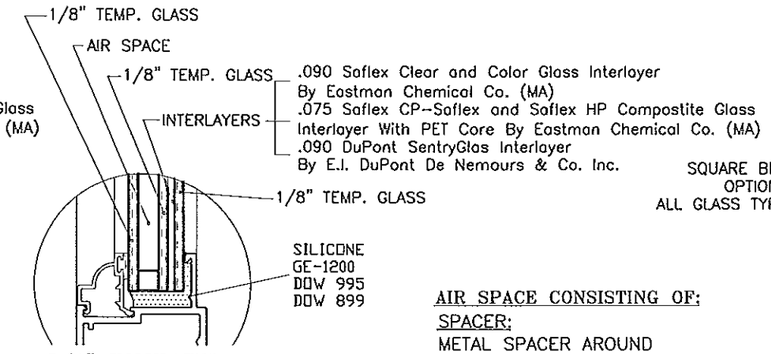

3/4" INSULATED
GLASS TYPE '3A'

AIR SPACE CONSISTING OF:
SPACER:
METAL SPACER AROUND
THE PERIMETER OF THE GLASS.

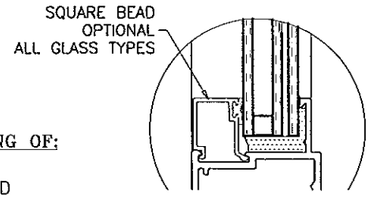

PERFORMANCE VALUES OF IMPACT RESISTANT WINDOWS
NO SHUTTERS REQUIRED
REFER TO SHEETS 5 THRU 7 FOR INSTALLATION DETAILS

WINDOW DIMS.		GLASS TYPE '2A'		GLASS TYPE '3A'	
WIDTH	HEIGHT	EXT. (+)	INT. (−)	EXT. (+)	INT. (−)
24"	24"	110.0	195.0	110.0	195.0
	28"	110.0	195.0	110.0	195.0
	30"	110.0	194.3	110.0	195.0
	36"	110.0	161.9	110.0	195.0
	42"	110.0	138.8	110.0	195.0
	48"	110.0	121.4	110.0	195.0
	54"	107.9	107.9	110.0	195.0
	60"	95.4	95.4	110.0	120.0
	66"	73.4	73.4	110.0	120.0
	72"	56.1	56.1	109.3	109.3
	78"	43.8	43.8	85.4	85.4
	84"	34.9	34.9	68.0	68.0
30"	24"	110.0	194.3	110.0	195.0
	28"	110.0	166.5	110.0	195.0
	30"	110.0	155.4	110.0	195.0
	36"	110.0	129.5	110.0	195.0
	42"	110.0	111.0	110.0	195.0
	48"	97.1	97.1	110.0	120.0
	54"	86.3	86.3	110.0	120.0
	60"	77.7	77.7	110.0	120.0
	66"	60.6	60.6	110.0	118.2
	72"	46.0	46.0	89.8	89.8
	78"	–	–	–	–
36"	24"	110.0	161.9	110.0	195.0
	28"	110.0	138.8	110.0	195.0
	30"	110.0	129.5	110.0	195.0
	36"	107.9	107.9	110.0	195.0
	42"	92.5	92.5	110.0	120.0
	48"	80.9	80.9	110.0	120.0
	54"	71.9	71.9	110.0	120.0
	60"	64.8	64.8	110.0	120.0
42"	24"	110.0	138.8	110.0	195.0
	28"	110.0	118.9	110.0	195.0
	30"	110.0	111.0	110.0	195.0
	36"	92.5	92.5	110.0	120.0
	42"	79.3	79.3	110.0	120.0
	48"	69.4	69.4	110.0	120.0
	54"	61.7	61.7	110.0	120.0

PERFORMANCE VALUES OF IMPACT RESISTANT WINDOWS
NO SHUTTERS REQUIRED
REFER TO SHEETS 5 THRU 7 FOR INSTALLATION DETAILS

WINDOW DIMS.		GLASS TYPE '2A'		GLASS TYPE '3A'	
WIDTH	HEIGHT	EXT. (+)	INT. (−)	EXT. (+)	INT. (−)
48"	24"	110.0	121.4	110.0	195.0
	28"	104.1	104.1	110.0	120.0
	30"	97.1	97.1	110.0	120.0
	36"	80.9	80.9	110.0	120.0
	42"	69.4	69.4	110.0	120.0
	48"	60.7	60.7	110.0	118.4
54"	24"	107.9	107.9	110.0	195.0
	28"	92.5	92.5	110.0	120.0
	30"	86.3	86.3	110.0	120.0
	36"	71.9	71.9	110.0	120.0
	42"	61.7	61.7	110.0	120.0
60"	24"	95.4	95.4	110.0	120.0
	28"	83.3	83.3	110.0	120.0
	30"	77.7	77.7	110.0	120.0
	36"	64.8	64.8	110.0	120.0
66"	24"	73.4	73.4	110.0	120.0
	28"	64.2	64.2	110.0	120.0
	30"	60.6	60.6	110.0	118.2
72"	24"	56.1	56.1	109.3	109.3
	28"	48.9	48.9	95.3	95.3
	30"	46.0	46.0	89.8	89.8
78"	24"	43.8	43.8	85.4	85.4
	28"	38.1	38.1	74.3	74.3
84"	24"	34.9	34.9	68.0	68.0

PERFORMANCE VALUES OF IMPACT RESISTANT WINDOWS
NO SHUTTERS REQUIRED
REFER TO SHEETS 5 THRU 7 FOR INSTALLATION DETAILS

WINDOW DIMS.		GLASS TYPE '2A'		GLASS TYPE '3A'	
WIDTH	HEIGHT	EXT. (+)	INT. (−)	EXT. (+)	INT. (−)
19-1/8"	26"	110.0	195.0	110.0	195.0
	38-3/8"	110.0	190.6	110.0	195.0
	50-5/8"	110.0	144.5	110.0	195.0
	63"	104.2	104.2	110.0	195.0
	74-1/4"	63.0	63.0	110.0	120.0
26-1/2"	26"	110.0	195.0	110.0	195.0
	38-3/8"	110.0	137.5	110.0	195.0
	50-5/8"	104.3	104.3	110.0	195.0
	63"	77.9	77.9	110.0	120.0
	74-1/4"	46.6	46.6	90.9	90.9
37"	26"	110.0	145.4	110.0	195.0
	38-3/8"	98.5	98.5	110.0	120.0
	50-5/8"	74.7	74.7	110.0	120.0
	63"	60.0	60.0	110.0	117.0
42"	26"	110.0	128.1	110.0	195.0
	38-3/8"	86.8	86.8	110.0	120.0
	50-5/8"	65.8	65.8	110.0	120.0
53-1/8"	26"	101.3	101.3	110.0	120.0
	38-3/8"	68.6	68.6	110.0	120.0

PRODUCT RENEWED
as complying with the Florida
Building Code 13-0606.05
Acceptance No
Expiration Date 10/31/2018
By
Miami Dade Product Control

NOTE:
LOAD/AREA LIMITS
FOR +110.0, −120.0 PSF = 16.34 SQ. FT.
+110.0, −195.0 PSF = 10.00 SQ. FT.

NOTE:
GLASS CAPACITIES ON THIS SHEET ARE BASED ON ASTM E1300-04 (3 SEC. GUSTS) AND FLORIDA BUILDING COMMISSION DECLARATORY STATEMENT DCA05-DEC-219

Engr: JAVAD AHMAD
CIVIL
FLA. PE # 70598
C.A.N. 3538
AUG 01 2013

AL-FAROOQ CORPORATION
ENGINEERS & PRODUCT DEVELOPMENT
1235 S.W. 87 AVE
MIAMI, FLORIDA 33174
TEL. (305) 264-8100 FAX. (305) 262-6978

COMP-ANL\W99-04CGI

SERIES-238 ALUM PROJECT OUT WINDOW

CGI WINDOWS & DOORS
10100 N.W. 25TH STREET
MIAMI, FL. 33172
TEL. (305) 593-6590 FAX. (305) 593-6592

revisions:

no	date	by	description
C	11.11.06		NO CHANGE THIS SHEET
D	01.15.08		NO CHANGE THIS SHEET
E	09.22.08		GENERAL REV.
F	01.26.12		UPDATED TO 2010 FBC
G	07.31.13		REV. PER RER COMMENTS

date: 01-21-99
scale: 1/2" = 1"
dr. by: HAMID
chk. by:

drawing no.
W99-04

sheet 4 of 7

INSTALLATION CONDITIONS FLANGE FRAME (APPLIES TO ALL FOUR SIDES)

FOR ANCHOR PERFORMANCE VALUES SEE SHEET 6

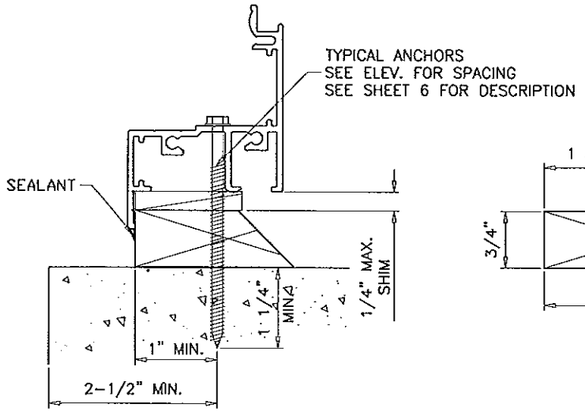

INSTALLATION TYPE '1'

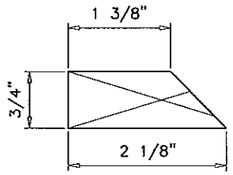

WOOD BUCK TYPE '1'

MATERIAL: PRESSURE TREATED

TYPICAL INSTALLATION DETAIL
ON ALL FOUR SIDES/USING WOOD

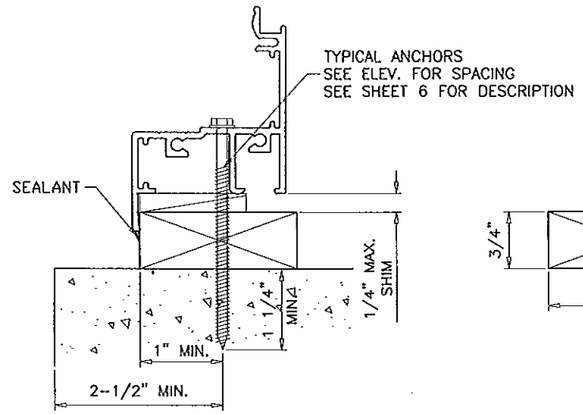

INSTALLATION TYPE '2'

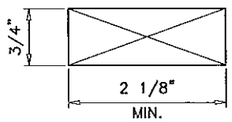

WOOD BUCK TYPE '2'

MATERIAL: PRESSURE TREATED

TYPICAL INSTALLATION DETAIL
ON ALL FOUR SIDES/USING WOOD

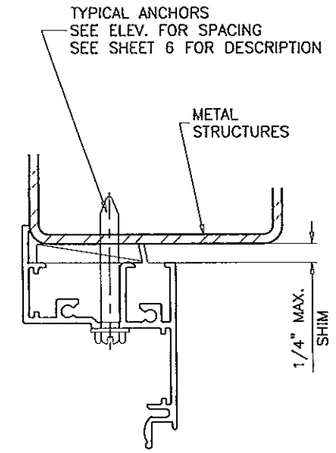

ATTACHMENT TO
METAL STRUCTURES

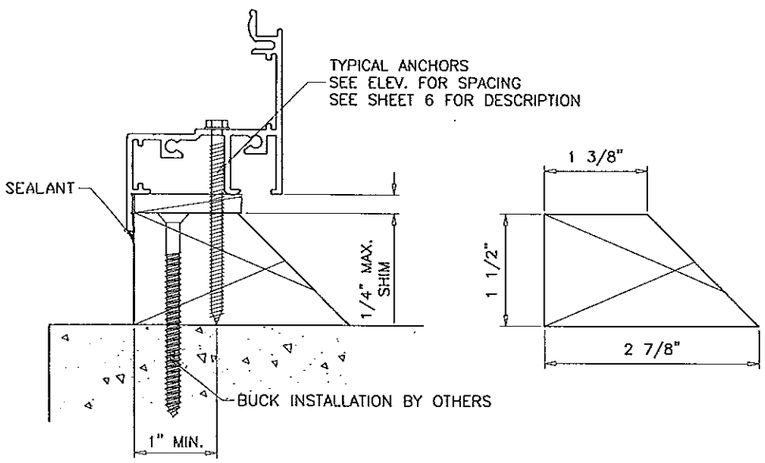

INSTALLATION TYPE '3'

WOOD BUCK TYPE '3'

MATERIAL: PRESSURE TREATED

TYPICAL INSTALLATION DETAIL
ON ALL FOUR SIDES/USING WOOD

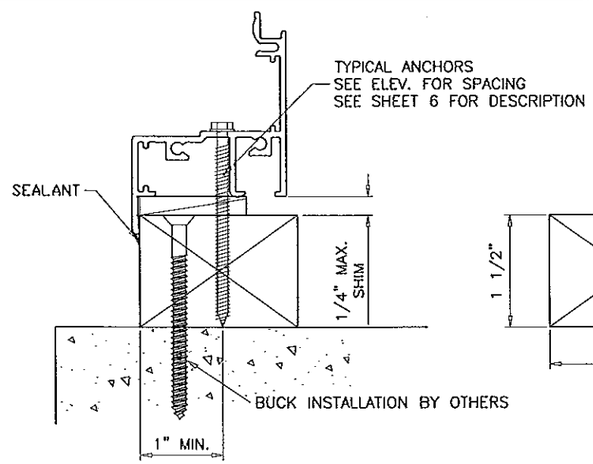

INSTALLATION TYPE '4'

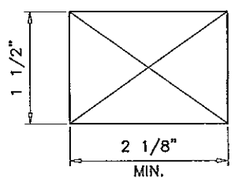

WOOD BUCK TYPE '4'

MATERIAL: PRESSURE TREATED

TYPICAL INSTALLATION DETAIL
ON ALL FOUR SIDES/USING WOOD

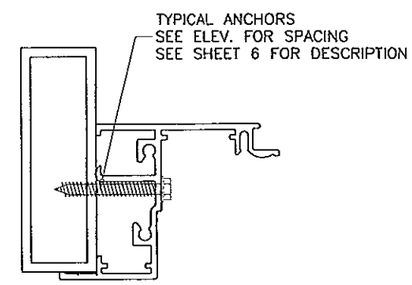

ATTACHMENT TO
APPROVED MULLIONS

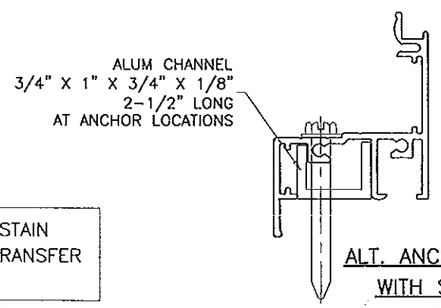

ALT. ANCHOR LOCATION
WITH SHEAR CLIP

WOOD BUCKS NOT BY CGI CORP., MUST SUSTAIN LOADS IMPOSED BY GLAZING SYSTEM AND TRANSFER THEM TO THE BUILDING STRUCTURE.

PRODUCT RENEWED
as complying with the Florida
Building Code
Acceptance No 13-0606.05
Expiration Date 10/31/2018
By
Miami Dade Product Control

Engr: JAVAD AHMAD
CIVIL
FLA. PE # 70592
C.A.N. 3938

AUG 0 1 2013

AL-FAROOQ CORPORATION
ENGINEERS & PRODUCT DEVELOPMENT
1235 S.W. 87 AVE
MIAMI, FLORIDA 33174
TEL. (305) 264-8100 FAX. (305) 262-6978
COMP-ANL\W99-04CGI

SERIES-238 ALUM PROJECT OUT WINDOW

CGI WINDOWS & DOORS
10100 N.W. 25TH STREET
MIAMI, FL. 33172
TEL. (305) 593-6590 FAX. (305) 593-6592

revisions:

no	date	by	description
C	11.11.06		REV. PER BCCO COMMENTS
D	01.15.08		NO CHANGE THIS SHEET
E	09.22.08		GENERAL REV.
F	01.26.12		NO CHANGE THIS SHEET
G	07.31.13		NO CHANGE THIS SHEET

date: 01-21-99
scale: 1/2" = 1"
dr. by: HAMID
chk. by:

drawing no.
W99-04

INSTALLATION CONDITIONS EQUAL LEG FRAME (APPLIES TO ALL FOUR SIDES)

FOR ANCHOR PERFORMANCE VALUES SEE SHEET 6

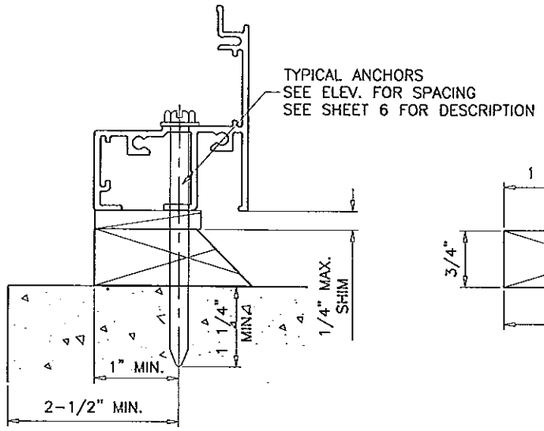

INSTALLATION TYPE '1'

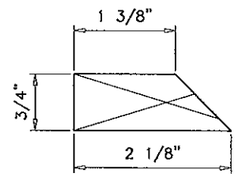

WOOD BUCK TYPE '1'

MATERIAL: PRESSURE TREATED

TYPICAL INSTALLATION DETAIL
ON ALL FOUR SIDES/USING WOOD

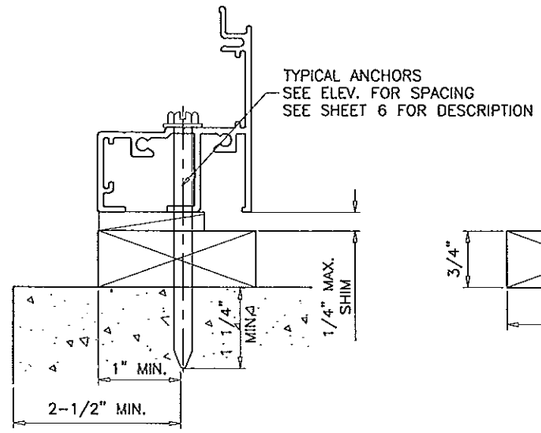

INSTALLATION TYPE '2'

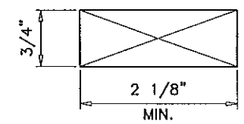

WOOD BUCK TYPE '2'

MATERIAL: PRESSURE TREATED

TYPICAL INSTALLATION DETAIL
ON ALL FOUR SIDES/USING WOOD

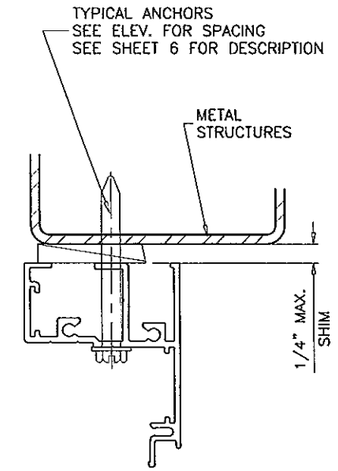

ATTACHMENT TO
METAL STRUCTURES

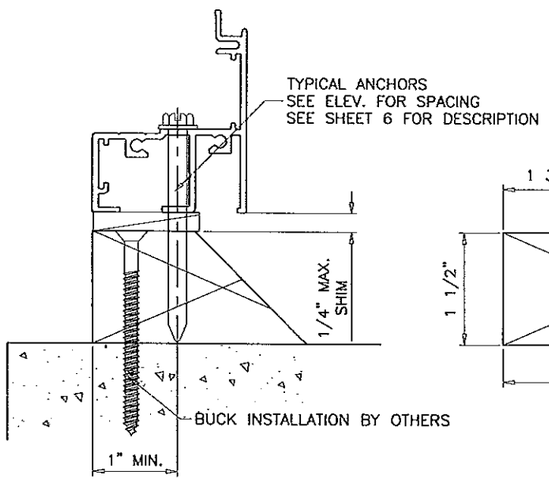

INSTALLATION TYPE '3'

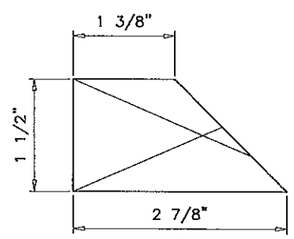

WOOD BUCK TYPE '3'

MATERIAL: PRESSURE TREATED

TYPICAL INSTALLATION DETAIL
ON ALL FOUR SIDES/USING WOOD

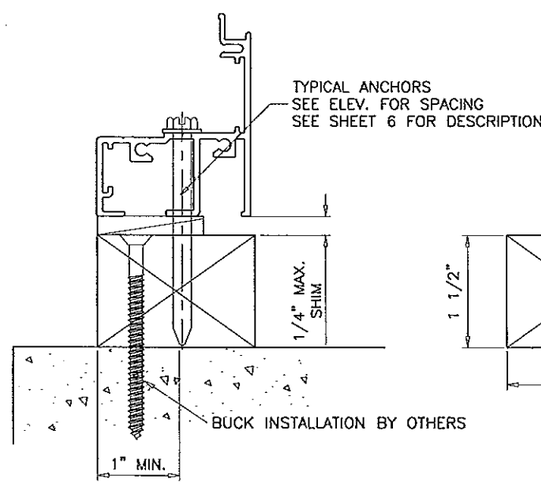

INSTALLATION TYPE '4'

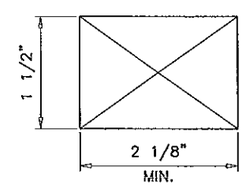

WOOD BUCK TYPE '4'

MATERIAL: PRESSURE TREATED

TYPICAL INSTALLATION DETAIL
ON ALL FOUR SIDES/USING WOOD

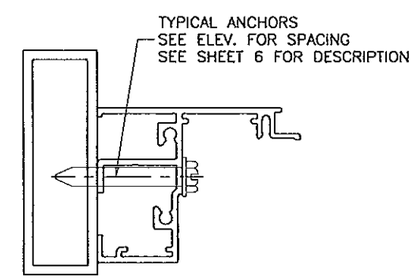

ATTACHMENT TO
APPROVED MULLIONS

WOOD BUCKS NOT BY CGI CORP., MUST SUSTAIN LOADS IMPOSED BY GLAZING SYSTEM AND TRANSFER THEM TO THE BUILDING STRUCTURE.

PRODUCT RENEWED
as complying with the Florida
Building Code
Acceptance No 13-0606.05
Expiration Date 10/31/2018
By
Miami Dade Product Control

Engr: JAVAD AHMAD
CIVIL
FLA. PE # 70592
C.A.N. 3538

AUG 0 1 2013

AL-FAROOQ CORPORATION
ENGINEERS & PRODUCT DEVELOPMENT
1235 S.W. 87 AVE
MIAMI, FLORIDA 33174
TEL. (305) 264-8100 FAX. (305) 262-6978
COMP-ANL\W99-04CGI

SERIES-238 ALUM PROJECT OUT WINDOW

CGI WINDOWS & DOORS
10100 N.W. 25TH STREET
MIAMI, FL. 33172
TEL. (305) 593-6590 FAX. (305) 593-6592

revisions:

no	date	by	description
E	09.22.08		GENERAL REV.
F	01.26.12		NO CHANGE THIS SHEET
G	07.31.13		NO CHANGE THIS SHEET

date: 01-21-99
scale: 1/2" = 1"
dr. by: HAMID
chk. by:

drawing no.
W99-04

PERFORMANCE VALUES OF INSTALLATION ANCHORS

REFER TO SHEET 5 FOR DETAILS

WINDOW DIMS.		ANCHORS W/O SHEAR CLIP		ANCHORS WITH SHEAR CLIP	
		AT 17" O.C.	AT 10" O.C.	AT 17" O.C.	AT 10" O.C.
WIDTH	HEIGHT	EXT.(+)/INT.(-)	EXT.(+)/INT.(-)	EXT.(+)/INT.(-)	EXT.(+)/INT.(-)
24"	24"	195.0	195.0	195.0	195.0
	28"	195.0	195.0	195.0	195.0
	30"	195.0	195.0	195.0	195.0
	36"	195.0	195.0	195.0	195.0
	42"	195.0	195.0	182.9	195.0
	48"	195.0	195.0	160.0	195.0
	54"	195.0	195.0	142.2	177.8
	60"	180.0	195.0	128.0	160.0
	66"	163.6	195.0	116.4	145.5
	72"	150.0	187.5	106.7	133.3
	78"	138.5	173.1	98.5	123.1
	84"	128.6	160.7	91.4	114.3
28"	24"	195.0	195.0	195.0	195.0
	28"	195.0	195.0	195.0	195.0
	30"	195.0	195.0	195.0	195.0
	36"	195.0	195.0	182.9	195.0
	42"	195.0	195.0	156.7	195.0
	48"	192.9	195.0	137.1	171.4
	54"	171.4	195.0	121.9	152.4
	60"	154.3	192.9	109.7	137.1
	66"	140.3	175.3	99.7	124.7
	72"	128.6	160.7	91.4	114.3
	78"	118.7	148.4	84.4	105.5
	84"	110.2	137.8	78.4	98.0
30"	24"	195.0	195.0	195.0	195.0
	28"	195.0	195.0	195.0	195.0
	30"	195.0	195.0	195.0	195.0
	36"	195.0	195.0	195.0	195.0
	42"	195.0	195.0	182.9	182.9
	48"	195.0	195.0	160.0	160.0
	54"	195.0	195.0	142.2	142.2
	60"	180.0	180.0	128.0	128.0
	66"	163.6	163.6	116.4	116.4
	72"	150.0	150.0	106.7	106.7
	78"	138.5	138.5	98.5	98.5
36"	24"	195.0	195.0	195.0	195.0
	28"	195.0	195.0	195.0	195.0
	30"	195.0	195.0	195.0	195.0
	36"	195.0	195.0	177.8	195.0
	42"	195.0	195.0	152.4	182.9
	48"	187.5	195.0	133.3	160.0
	54"	166.7	195.0	118.5	142.2
	60"	150.0	180.0	106.7	128.0
42"	24"	192.9	195.0	137.1	182.9
	28"	165.3	195.0	117.6	156.7
	30"	154.3	195.0	109.7	146.3
	36"	128.6	171.4	91.4	121.9
	42"	110.2	146.9	78.4	104.5
	48"	96.4	128.6	68.6	91.4
	54"	85.7	114.3	61.0	81.3

PERFORMANCE VALUES OF INSTALLATION ANCHORS

REFER TO SHEET 5 FOR DETAILS

WINDOW DIMS.		ANCHORS W/O SHEAR CLIP		ANCHORS WITH SHEAR CLIP	
		AT 17" O.C.	AT 10" O.C.	AT 17" O.C.	AT 10" O.C.
WIDTH	HEIGHT	EXT.(+)/INT.(-)	EXT.(+)/INT.(-)	EXT.(+)/INT.(-)	EXT.(+)/INT.(-)
48"	24"	195.0	195.0	160.0	195.0
	28"	192.9	195.0	137.1	171.4
	30"	180.0	195.0	128.0	160.0
	36"	150.0	187.5	106.7	133.3
	42"	128.6	160.7	91.4	114.3
	48"	112.5	140.6	80.0	100.0
54"	24"	195.0	195.0	142.2	195.0
	28"	171.4	195.0	121.9	182.9
	30"	160.0	195.0	113.8	170.7
	36"	133.3	195.0	94.8	142.2
	42"	114.3	171.4	81.3	121.9
60"	24"	180.0	195.0	128.0	192.0
	28"	154.3	195.0	109.7	164.6
	30"	144.0	195.0	102.4	153.6
	36"	120.0	180.0	85.3	128.0
66"	24"	195.0	195.0	145.5	195.0
	28"	175.3	195.0	124.7	174.5
	30"	163.6	195.0	116.4	162.9
72"	24"	187.5	195.0	133.3	186.7
	28"	160.7	195.0	114.3	160.0
	30"	150.0	195.0	106.7	149.3
78"	24"	173.1	195.0	123.1	195.0
	28"	148.4	195.0	105.5	168.8
	30"	138.5	195.0	98.5	157.5
84"	24"	192.9	195.0	137.1	195.0
	28"	165.3	195.0	117.6	176.3

PERFORMANCE VALUES OF INSTALLATION ANCHORS

REFER TO SHEET 5 FOR DETAILS

WINDOW DIMS.		ANCHORS W/O SHEAR CLIP		ANCHORS WITH SHEAR CLIP	
		AT 17" O.C.	AT 10" O.C.	AT 17" O.C.	AT 10" O.C.
WIDTH	HEIGHT	EXT.(+)/INT.(-)	EXT.(+)/INT.(-)	EXT.(+)/INT.(-)	EXT.(+)/INT.(-)
19-1/8"	26"	195.0	195.0	195.0	195.0
	38-3/8"	195.0	195.0	195.0	195.0
	50-5/8"	195.0	195.0	190.4	190.4
	63"	195.0	195.0	153.0	153.0
	74-1/4"	182.5	182.5	129.8	129.8
26-1/2"	26"	195.0	195.0	195.0	195.0
	38-3/8"	195.0	195.0	181.3	195.0
	50-5/8"	193.2	195.0	137.4	171.7
	63"	155.3	194.1	110.4	138.0
	74-1/4"	131.7	164.7	93.7	117.1
37"	26"	195.0	195.0	143.7	191.6
	38-3/8"	136.9	182.6	97.4	129.8
	50-5/8"	103.8	138.4	73.8	98.4
	63"	83.4	111.2	59.3	79.1
53-1/8"	26"	187.7	195.0	133.4	195.0
	38-3/8"	127.1	190.7	90.4	135.6

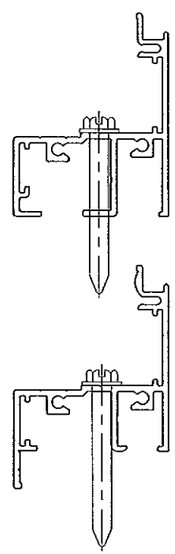

ANCHORS W/O SHEAR CLIP

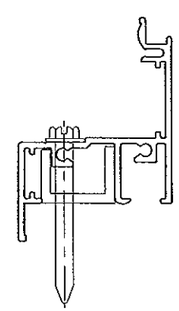

ANCHORS WITH SHEAR CLIP

PRODUCT RENEWED
as complying with the Florida
Building Code 13-0606.05
Acceptance No
Expiration Date 10/31/2018
By
Miami Dade Product Control

TYPICAL ANCHORS: SEE ELEV. FOR SPACING

1/4" DIA. KWIK-CON II BY 'HILTI' (Fu=163 KSI, Fy=157 KSI)

1/4" DIA. ULTRACON BY 'ELCO' (Fu=177 KSI, Fy=155 KSI)

INTO 2BY WOOD BUCKS OR WOOD STRUCTURES
1-3/8" MIN. PENETRATION INTO WOOD

THRU 1BY BUCKS INTO CONC. OR MASONRY
1-1/4" MIN. EMBED INTO CONC. OR MASONRY

DIRECTLY INTO CONC. OR MASONRY
1-1/4" MIN. EMBED INTO CONC. OR MASONRY

#14 SMS OR SELF DRILLING SCREWS (GRADE 2 CRS)

INTO MIAMI-DADE COUNTY APPROVED MULLIONS (MIN. THK. = .090")
INTO METAL STRUCTURES

STEEL : 12 GA. MIN. (Fy = 36 KSI MIN.)
ALUMINUM : 1/8" THK. MIN. (6063-T5 MIN.)
(STEEL IN CONTACT WITH ALUMINUM TO BE PLATED OR PAINTED)

TYPICAL EDGE DISTANCE

INTO CONCRETE AND MASONRY = 2-1/2" MIN.
INTO WOOD STRUCTURE = 1" MIN.
INTO METAL STRUCTURE = 3/4" MIN.

CONCRETE f'c = 3000 PSI MIN.
MASONRY f'm = 1500 PSI MIN.

Engr: JAVAD AHMAD
CIVIL
FLA. PE # 70592
C.A.N. 3538

AUG 01 2013

AL-FAROOQ CORPORATION
ENGINEERS & PRODUCT DEVELOPMENT
1235 S.W. 87 AVE
MIAMI, FLORIDA 33174
TEL. (305) 264-8100 FAX. (305) 262-6978

COMP-ANL\W99-04CGI

SERIES-238 ALUM PROJECT OUT WINDOW

CGI WINDOWS & DOORS
10100 N.W. 25TH STREET
MIAMI, FL. 33172
TEL. (305) 593-6590 FAX. (305) 593-6592

revisions:

no	date	by	description
C	11.11.06		NO CHANGE THIS SHEET
D	01.15.08		NO CHANGE THIS SHEET
E	09.22.08		GENERAL REV.
F	01.26.12		NO CHANGE THIS SHEET
G	07.31.13		NO CHANGE THIS SHEET

date: 01-21-99
scale: 1/2" = 1"
dr. by: HAMID
chk. by:

drawing no.
W99-04

PERFORMANCE VALUES OF ALUMINUM BUCK INSTALLATION ANCHORS			
WINDOW DIMS.		1/4" ANCHORS INTO MASONRY	1/4" ANCHORS INTO WOOD
WIDTH	HEIGHT	EXT.(+)/INT.(−)	EXT.(+)/INT.(−)
24"	24"	195.0	195.0
	28"	195.0	195.0
	30"	195.0	195.0
	36"	195.0	195.0
	42"	195.0	169.1
	48"	195.0	148.0
	54"	195.0	131.6
	60"	177.6	118.4
	66"	161.5	107.6
	72"	148.0	98.7
	78"	136.6	91.1
	84"	126.9	84.6
28"	24"	195.0	195.0
	28"	195.0	195.0
	30"	195.0	195.0
	36"	195.0	169.1
	42"	195.0	145.0
	48"	190.3	126.9
	54"	169.1	112.8
	60"	152.2	101.5
	66"	138.4	92.3
	72"	126.9	84.6
	78"	117.1	78.1
	84"	108.7	72.5
30"	24"	195.0	195.0
	28"	195.0	195.0
	30"	195.0	189.4
	36"	195.0	157.9
	42"	195.0	135.3
	48"	195.0	118.4
	54"	195.0	105.2
	60"	177.6	94.7
	66"	161.5	86.1
	72"	148.0	78.9
	78"	136.6	72.9
36"	24"	195.0	195.0
	28"	195.0	169.1
	30"	195.0	157.9
	36"	195.0	131.6
	42"	195.0	112.8
	48"	185.0	98.7
	54"	164.4	87.7
	60"	148.0	78.9
42"	24"	190.3	169.1
	28"	163.1	145.0
	30"	152.2	135.3
	36"	126.9	112.8
	42"	108.7	96.7
	48"	95.1	84.6
	54"	84.6	75.2

PERFORMANCE VALUES OF ALUMINUM BUCK INSTALLATION ANCHORS			
WINDOW DIMS.		1/4" ANCHORS INTO MASONRY	1/4" ANCHORS INTO WOOD
WIDTH	HEIGHT	EXT.(+)/INT.(−)	EXT.(+)/INT.(−)
48"	24"	195.0	148.0
	28"	190.3	126.9
	30"	177.6	118.4
	36"	148.0	98.7
	42"	126.9	84.6
	48"	111.0	74.0
54"	24"	195.0	131.6
	28"	169.1	112.8
	30"	157.9	105.2
	36"	131.6	87.7
	42"	112.8	75.2
60"	24"	177.6	118.4
	28"	152.2	101.5
	30"	142.1	94.7
	36"	118.4	78.9
66"	24"	195.0	134.5
	28"	173.0	115.3
	30"	161.5	107.6
72"	24"	185.0	123.3
	28"	158.6	105.7
	30"	148.0	98.7
78"	24"	170.8	113.8
	28"	146.4	97.6
	30"	136.6	91.1
84"	24"	190.3	126.9
	28"	163.1	108.7
19-1/8"	26"	195.0	195.0
	38-3/8"	195.0	195.0
	50-5/8"	195.0	176.1
	63"	195.0	141.5
	74-1/4"	180.1	120.1
26-1/2"	26"	195.0	195.0
	38-3/8"	195.0	167.7
	50-5/8"	190.6	127.1
	63"	153.2	102.1
	74-1/4"	130.0	86.7
37"	26"	195.0	177.2
	38-3/8"	135.1	120.1
	50-5/8"	102.4	91.0
	63"	82.3	73.1
53-1/8"	26"	185.2	123.4
	38-3/8"	125.4	83.6

ALUMINUM BUCK FRAMING DETAILS

REFER TO SHEETS 3 THRU 6 FOR WINDOW CAPACITIES
USE LOWER APPLICABLE VALUES.

NOTE:
ALUM BUCK ANCHORS TO BE INTO
CONCRETE AT HEAD & SILL.
MAY BE INTO FILLED CMU AT JAMBS.

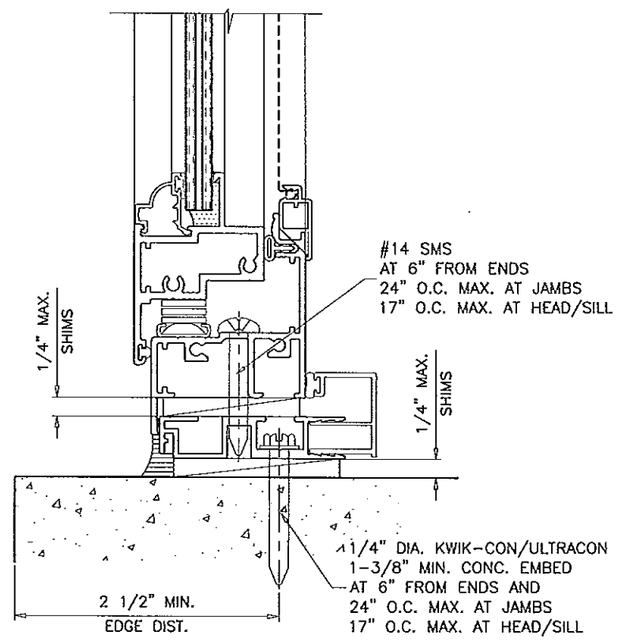

INSTALLATION TYPE '5'
INTO MASONRY

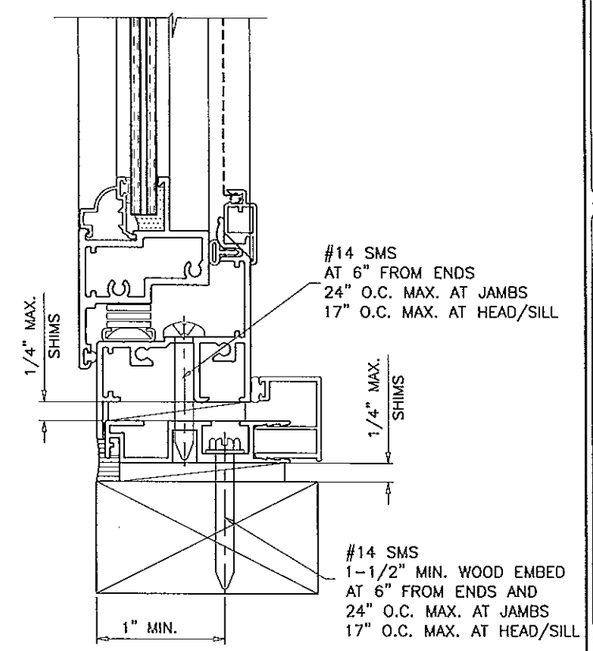

INSTALLATION TYPE '6'
2BY WOOD BUCK OR WOOD STRUCTURES

TYPICAL INSTALLATION DETAIL
ON ALL FOUR SIDES/USING ALUMINUM BUCK SYSTEM

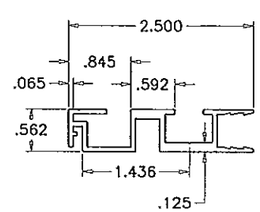

ALUMINUM BUCK
6063-T6

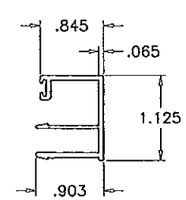

OPTIONAL COVER
6063-T6

PRODUCT RENEWED
as complying with the Florida
Building Code
Acceptance No 13-0606.05
Expiration Date 10/31/2018
By
Miami Dade Product Control

Engr: JAVAD AHMAD
CIVIL
FLA. PE # 70592
C.A.N. 3538

AUG 01 2013

AL-FAROOQ CORPORATION
ENGINEERS & PRODUCT DEVELOPMENT
1235 S.W. 87 AVE
MIAMI, FLORIDA 33174
TEL. (305) 264-8100 FAX. (305) 262-6978

COMP-ANL\W99-04CGI

SERIES-238 ALUM PROJECT OUT WINDOW

CGI WINDOWS & DOORS
10100 N.W. 25TH STREET
MIAMI, FL. 33172
TEL. (305) 593-6590 FAX. (305) 593-6592

revisions:

no	date	by	description
D	01.15.08		ALUM BUCK ADDED
E	09.22.08		GENERAL REV.
F	01.26.12		UPDATED TO 2010 FBC
G	07.31.13		NO CHANGE THIS SHEET

date: 01-21-99
scale: 1/2" = 1"
dr. by: HAMID
chk. by:

drawing no.
W99-04