MIAMI-DADE COUNTY
DEPARTMENT OF REGULATORY AND ECONOMIC RESOURCES (RER)
BOARD AND CODE ADMINISTRATION DIVISION

MIAMI-DADE COUNTY
PRODUCT CONTROL SECTION
11805 SW 26 Street, Room 208
T (786) 315-2590 F (786) 315-2599
www.miamidade.gov/economy

NOTICE OF ACCEPTANCE (NOA)

Pella Corporation
102 Main Street
Pella, IA 50219

SCOPE:

This NOA is being issued under the applicable rules and regulations governing the use of construction materials. The documentation submitted has been reviewed and accepted by Miami-Dade County RER - Product Control Section to be used in Miami Dade County and other areas where allowed by the Authority Having Jurisdiction (AHJ).

This NOA shall not be valid after the expiration date stated below. The Miami-Dade County Product Control Section (In Miami Dade County) and/or the AHJ (in areas other than Miami Dade County) reserve the right to have this product or material tested for quality assurance purposes. If this product or material fails to perform in the accepted manner, the manufacturer will incur the expense of such testing and the AHJ may immediately revoke, modify, or suspend the use of such product or material within their jurisdiction. RER reserves the right to revoke this acceptance, if it is determined by Miami-Dade County Product Control Section that this product or material fails to meet the requirements of the applicable building code.

This product is approved as described herein, and has been designed to comply with the Florida Building Code, including the High Velocity Hurricane Zone.

DESCRIPTION: Series "350 HurricaneShield® 4½" Vinyl" Clipped Aluminum Mullion – L.M.I.

APPROVAL DOCUMENT: Drawing No. **PELL0033**, titled "Series 350 4-1/2 Vinyl Window Mullions-Impact", sheets 1 through 36 of 36, dated 03/04/13, with revision A dated 02/25/14, prepared by PTC Product Design Group, LLC, signed and sealed by Robert J. Amoruso, P.E., bearing the Miami–Dade County Product Control Section Approval stamp with the Notice of Acceptance number and approval date by the Miami-Dade County Product Control Section.

MISSILE IMPACT RATING: Large and Small Missile Impact Resistant

LABELING: Each unit shall bear a permanent label with the manufacturer's name or logo, city, state, model/series, and following statement: "Miami-Dade County Product Control Approved", unless otherwise noted herein.

RENEWAL of this NOA shall be considered after a renewal application has been filed and there has been no change in the applicable building code negatively affecting the performance of this product.

TERMINATION of this NOA will occur after the expiration date or if there has been a revision or change in the materials, use, and/or manufacture of the product or process. Misuse of this NOA as an endorsement of any product, for sales, advertising or any other purposes shall automatically terminate this NOA. Failure to comply with any section of this NOA shall be cause for termination and removal of NOA.

ADVERTISEMENT: The NOA number preceded by the words Miami-Dade County, Florida, and followed by the expiration date may be displayed in advertising literature. If any portion of the NOA is displayed, then it shall be done in its entirety.

INSPECTION: A copy of this entire NOA shall be provided to the user by the manufacturer or its distributors and shall be available for inspection at the job site at the request of the Building Official.

This NOA consists of this page 1 and evidence page E-1, as well as approval document mentioned above.

The submitted documentation was reviewed by **Manuel Perez, P.E.**

4/8/14

Pella Corporation

NOTICE OF ACCEPTANCE: EVIDENCE SUBMITTED

A. DRAWINGS

1. Manufacturer's die drawings and sections.
2. Drawing No. **PELL0033**, titled "Series 350 4-1/2" Vinyl Window Mullions– Impact", sheets 1 through 36 of 36, dated 03/04/13, with revision A dated 02/25/14, prepared by PTC Product Design Group, LLC, signed and sealed by Robert J. Amoruso, P.E.

B. TESTS

1. Test reports on: 1) Uniform Static Air Pressure Test, Loading per FBC, TAS 202–94
   2) Large Missile Impact Test per FBC, TAS 201–94
   3) Cyclic Wind Pressure Loading per FBC, TAS 203–94

   along with marked-up drawings and installation diagram of a 350 series white PVC fixed windows with 1" mullion, prepared by Element Materials Technology, Des Moines, IA, Test Report No. **ESP015035P.DADE Fixed Mulled**, dated 11/04/13, signed and sealed by Jason R. Steen, P.E.

C. CALCULATIONS

1. Anchor verification calculations and structural analysis, complying with **FBC–2010**, dated 03/04/13, prepared by PTC Product Design Group, LLC, signed and sealed by Robert J. Amoruso, P.E.

D. QUALITY ASSURANCE

1. Miami-Dade Department of Regulatory and Economic Resources (RER).

E. MATERIAL CERTIFICATIONS

1. None.

F. STATEMENTS

1. Statement letter of no financial interest, independence, conformance and complying with **FBC–2010**, dated 01/03/13, issued by PTC Product Design Group, LLC, signed and sealed by Robert J. Amoruso, P.E.
2. Proposal No. **12–2121** issued by Product Control, dated January 25, 2013, signed by Manuel Perez, P.E.

G. OTHERS

1. None.

Manuel Perez

Manuel Perez, P.E.
Product Control Examiner
NOA No. 13-0610.03
Expiration Date: April 17, 2019
Approval Date: April 17, 2014

PELLA CORPORATION

SERIES 350 4 1/2" VINYL WINDOW MULLION SYSTEM - IMPACT

INSTALLATION ANCHORAGE DETAILS

GENERAL NOTES:

1. THIS PRODUCT HAS BEEN TESTED, EVALUATED AND DESIGNED TO THE DESIGN PRESSURE(S) STATED HEREIN AS FOLLOWS.
   - 1.1. IN COMPLIANCE WITH THE 2010 FLORIDA BUILDING CODE - SECTIONS 1609.1.2, 1626, 1715.5.2, 1715.5.4, 1715.5.5 AND 2411.3 AND TO THE 2010 FLORIDA RESIDENTIAL CODE - SECTIONS R301.2.1.2, R612.6, R612.10, R612.11 AND R4410.2.3.
   - 1.2. PERFORMANCE STANDARDS:
     - 1.2.1. TAS 201-94, LARGE MISSILE IMPACT.
     - 1.2.2. TAS 202-94.
     - 1.2.3. TAS 203-94.
2. THIS PRODUCT EVALUATION DOCUMENT IS FOR USE IN THE HIGH VELOCITY HURRICANE ZONE (HVHZ).
3. ADEQUACY OF THE EXISTING STRUCTURAL CONCRETE / MASONRY, 2X FRAMING AND METAL FRAMING SUBSTRATES AS A MAIN WIND FORCE RESISTING SYSTEM CAPABLE OF WITHSTANDING AND TRANSFERRING APPLIED PRODUCT LOADS TO THE FOUNDATION IS THE RESPONSIBILITY OF THE LICENSED PROFESSIONAL ENGINEER OR REGISTERED ARCHITECT ACTING AS THE DESIGN PROFESSIONAL OF RECORD FOR THE PROJECT OF INSTALLATION.
4. 1X AND 2X BUCKS (WHEN USED) SHALL BE DESIGNED AND ANCHORED TO PROPERLY TRANSFER ALL LOADS TO THE STRUCTURE. BUCK DESIGN AND INSTALLATION IS THE RESPONSIBILITY OF THE LICENSED PROFESSIONAL ENGINEER OR REGISTERED ARCHITECT ACTING AS THE DESIGN PROFESSIONAL OF RECORD FOR THE PROJECT OF INSTALLATION.
5. WHEN INSTALLED IN LOCATIONS WHERE WINDBORNE DEBRIS PROTECTION REQUIREMENTS EXIST (INCLUDING THE HIGH VELOCITY HURRICANE ZONE (HVHZ), USE OF AN IMPACT PROTECTIVE SYSTEM COMPLYING WITH THE FBC REQUIREMENTS FOR WINDBORNE DEBRIS REGIONS IS NOT REQUIRED FOR THE PRODUCT(S) HEREIN.
6. SEPERATE PRODUCT EVALUATION DOCUMENTS (PED) FOR EACH GLAZING PRODUCT USED IN CONJUNCTION WITH THESE MULLIONS MUST BE SUBMITTED ALONG WITH THIS PRODUCT EVALUATION DOCUMENT.
7. THE INSTALLATION DETAILS DESCRIBED IN THIS PRODUCT EVALUATION DOCUMENT ARE GENERIC AND MAY NOT REFLECT ACTUAL CONDITIONS FOR A SPECIFIC SITE. IF SITE CONDITIONS CAUSE INSTALLATION TO DEVIATE FROM THE REQUIREMENTS DETAILED IN THIS PRODUCT EVALUATION DOCUMENT, SITE SPECIFIC DOCUMENTS SHALL BE PREPARED FOR USE WITH THIS DOCUMENT BY A LICENSED PROFESSIONAL ENGINEER OR REGISTERED ARCHITECT
8. FOR MULLION DESIGN PRESSURE RATINGS SEE APPROPRIATE LOAD SPAN RATING TABLES AS LISTED IN THE TABLE OF CONTENTS.
9. THE DESIGN PRESSURE RATING OF THE ASSEMBLY SHALL BE THE LESSER OF THE LOAD CAPACITY OF THE MULLION AS DETERMINED USING THIS PRODUCT EVALUATION DOCUMENT OR THE CERTIFIED DESIGN PRESSURE RATING OF THE INDIVIDUAL GLAZING PRODUCTS USED.
10. BOUNDING BOX DIMENSIONS FOR GEOMETRIC TRANSOM SHAPES MUST BE EQUAL TO OR LESS THAN RECTANGULAR TRANSOM DIMENSIONS SHOWN HEREIN.
11. MATERIALS, INCLUDING BUT NOT LIMITED TO STEEL SCREWS THAT COME INTO CONTACT WITH OTHER DISSIMILAR MATERIALS SHALL MEET THE REQUIREMENTS OF THE 2010 FLORIDA BUILDING CODE, SECTION 2003.8.
12. APPROVED TWIN UNITS OR APPROVED SINGLES CAN BE USED IN MULLION CONFIGURATIONS. THE VERTICAL AND HORIZONTAL MULLION CONFIGURATIONS CAN BE COMBINED TO MULL MULTIPLE SINGLE UNITS TOGETHER.

INSTALLATION NOTES:

1. PRODUCT ANCHORS SHALL BE AS DESIGNATED AND LOCATED AS SHOWN IN THIS PRODUCT EVALUATION DOCUMENT. ANCHOR EMBEDMENT AND EDGE DISTANCE EXCLUDE WALL FINISHE S, INCLUDING BUT NOT LIMITED TO STUCCO, FOAM, BRICK VENEER AND SIDING.
2. SEE *INSTALLATION ANCHOR SCHEDULE* ON SHEET 2 FOR TYPE AND GRADE OF ANCHOR, AND/OR MANUFACTURER'S ANCHOR SPECIFICATIONS, MINIMUM NOMINAL SIZE, MINIMUM EMBEDMENT INTO SUBSTRATE AND MINIMUM EDGE DISTANCES.
   - 2.1. EDGE DISTANCES SHALL BE MEASURED FROM CENTERLINE OF ANCHOR TO EDGE OF STRUCTURAL SUBSTRATE EITHER TO THE INTERIOR OR EXTERIOR OF THE FENESTRATION PRODUCT.
   - 2.2. SEE SHEET 2 FOR ILLUSTRATION OF ANCHOR EDGE DISTANCE AND SPACING.
   - 2.3. MINIMUM EMBEDMENT SHALL BE BASED ON PENETRATION INTO MAIN WIND FORCE RESISTING SYSTEM SUBSTRATE.
3. SEE SHEETS 3, 6 AND 7 FOR SPECIFIC ANCHOR INSTALLATION DETAILS.
4. SEE SHEET 5 FOR APPROVED MULLED WINDOW CONFIGURATIONS.

TABLE OF CONTENTS

SHEET	SHEET DESCRIPTION
1	GENERAL NOTES AND INSTALLATION NOTES
2	INSTALLATION ANCHOR SCHEDULE
3	MULLION END CLIP - ATTACHMENT ILLUSTRATIONS
4	WINDOW TO MULLION - ATTACHMENT ILLUSTRATIONS
5	APPROVED MULLED WINDOW CONFIGURATIONS AND MULLIONS
6	BLOCK AND FLANGE FRAME INSTALLATIONS DETAILS
7	FIN FRAME INSTALLATIONS DETAILS
8	FIN FRAME INSTALLATIONS DETAILS (CONTINUED) MULLION TO MULLION INSTALLATION DETAILS
9 AND 10	MULLION CAPACITY LOAD TABLES - INSTRUCTIONS
11 TO 16	BLOCK AND FLANGE FRAME - UNREINFORCED MULLION LOAD CAPACITY TABLES 1A THROUGH 4.2B
17 TO 22	BLOCK AND FLANGE FRAME - REINFORCED MULLION LOAD CAPACITY TABLES 5A THROUGH 8.2B
23 TO 28	FIN FRAME - REINFORCED AND UNREINFORCED MULLION LOAD CAPACITY TABLES 9A THROUGH 12.2B
29	V984359 STRAP DETAILS
30	V984357 / V984356 END ANCHOR NAIL FIN DETAILS
31	V982510 END ANCHOR 5/8" FLANGE DETAILS
32	V982535 END ANCHOR 4.5" BLOCK FRAME DETAILS
33	V982357 1" STRUCTURAL MULLION & REINFORCEMENT DETAILS
34	V982365 FIN FRAME END SPLICE DETAILS
35	V982518 5/8" FLANGE FRAME END SPLICE DETAILS
36	V984416 FLUSH FLANGE FRAME END SPLICE DETAILS

PROJECT # 411-1205

REV	DESCRIPTION	DATE	BY
A	REVISED PER MD COMMENTS	2/25/14	RJA

PELLA CORPORATION
102 MAIN STREET
PELLA, IA 50219

TITLE: SERIES 350 4-1/2" VINYL WINDOW MULLIONS - IMPACT
GENERAL NOTES AND INSTALLATION NOTES

DRAWN BY: RJA | DATE: 03/04/13
SCALE: N.T.S. | DRAWING NO: PELL0033
REV: A | SHEET: 1 OF 36

PREPARED BY:
PTC PRODUCT DESIGN GROUP, LLC
PO BOX 520775
LONGWOOD, FLORIDA 32752
FBPE C.A. NO. 25925
Phone: 321.860.1788
Fax: 321.800.1789
Email: info@ptc-corp.com

Approved as complying with the Florida Building Code
Date APR 11 2014
NOA# 13-0610.03
Miami Dade Product Control
By: Manuel Perez

Robert J. Amoruso, P.E.
Florida P.E. No. 49752

ROBERT JAMES AMORUSO
LICENSE
No 49752
2/25/14
STATE OF FLORIDA
PROFESSIONAL ENGINEER

INSTALLATION ANCHOR SCHEDULE

INSTALLATION TYPE	SUBSTRATE	HEAD TYPE	SIZE	MANUFACTURER AND/OR SPECIFICATION	MIN. EMBEDMENT (IN)	MIN. EDGE DISTANCE (IN)	MIN. SPACING (IN)	CAPACITIES BASED ON
4 1/2" BLOCK OR 4 1/2" FLANGE FRAME	CONCRETE	FLAT OR PAN HEAD	3/16"	ITW TAPCONS (3)	1 3/4"	1 1/8"	3"	MIN. 2000 PSI CONCRETE
				ELCO ULTRACON	1 3/4"	1"	2 1/4"	MIN. 2846 PSI CONCRETE
				ELCO CRETE-FLEX SS4	2"	2"	2.28"	MIN. 2000 PSI CONCRETE
				HILTI KWIK-CON II	Not Recommended			MIN. 3000 PSI CONCRETE
	MASONRY (BLOCK/CMU)	FLAT OR PAN HEAD	3/16"	ITW TAPCONS (3)	1"	2"	3"	STRENGTH CONFORMANCE TO ASTM C-90, MEDIUM WEIGHT
				ELCO ULTRACON	Not Recommended			
				ELCO CRETE-FLEX SS4	1 1/4"	2"	2.28"	
				HILTI KWIK-CON II	1"	1 1/2"	3"	
	WOOD (1)	FLAT OR PAN HEAD	NO. 10	ANSI B18.6.1 (WOOD SCREW) (2) ASME B18.6.4 (TAPPING SCREW) (2)	1-1/2"	3/4"	3/4"	WOOD WITH A MINIMUM SPECIFIC GRAVITY OF 0.55
	1/8" THK. ALUMINUM	FLAT OR PAN HEAD	NO. 10	ASME B18.6.4 (TAPPING SCREW) (2)	FULLY PENETRATE SUBSTRATE WITH 3 THREADS PROTRUDING INTERNALLY	9/32"	9/16"	ALUMINUM 6063-T5 ALUMINUM OR BETTER
	1/8" THK. STEEL	FLAT OR PAN HEAD	NO. 10	ASME B18.6.4 (TAPPING SCREW) (2)		9/32"	9/16"	ASTM A-36 STEEL, 36 KSI YIELD STRENGTH STEEL OR BETTER
	20 GAUGE (0.0346" MIN. THK.) STEEL INCLUDING STEEL STUDS	FLAT OR PAN HEAD	NO. 10	ASME B18.6.4 (TAPPING SCREW) (2)		9/32"	9/16"	ASTM A-653 STEEL, 33 KSI YIELD STRENGTH STEEL OR BETTER
4 1/2" NAILING FIN FRAME	WOOD (1)	PAN HEAD	NO. 10	ANSI B18.6.1 (WOOD SCREW) (2) ASME B18.6.4 (TAPPING SCREW) (2)	1-1/2"	0.285"	0.57"	WOOD WITH A MINIMUM SPECIFIC GRAVITY OF 0.42
	1/8" THK. ALUMINUM	FLAT OR PAN HEAD	NO. 10	ASME B18.6.4 (TAPPING SCREW) (2)	FULLY PENETRATE SUBSTRATE WITH 3 THREADS PROTRUDING INTERNALLY	9/32"	9/16"	ALUMINUM 6063-T5 ALUMINUM OR BETTER
	1/8" THK. STEEL	FLAT OR PAN HEAD	NO. 10	ASME B18.6.4 (TAPPING SCREW) (2)		9/32"	9/16"	ASTM A-36 STEEL, 36 KSI YIELD STRENGTH STEEL OR BETTER
	20 GAUGE (0.0346" MIN. THK.) STEEL INCLUDING STEEL STUDS	FLAT OR PAN HEAD	NO. 10	ASME B18.6.4 (TAPPING SCREW) (2)		9/32"	9/16"	ASTM A-653 STEEL, 33 KSI YIELD STRENGTH STEEL OR BETTER

NOTES:

1) FOR WOOD AND TAPPING SCREWS IF SPLITTING IS A CONCERN, DRILL 7/64" PILOT HOLE FOR FLANGE/BLOCK FRAME INSTALLATION OR 3/32" PILOT HOLE FOR NAILING FIN INSTALLATION.

2) WOOD AND TAPPING SCREWS WILL HAVE GRADE 2 EQUIVALENT STRENGTH (FTU = 92 KSI AND FTY = 56 KSI).

3) WHEN ITW TAPCONS ARE USED FOR CONCRETE/MASONRY INSTALLATION, THEY SHALL BE THE ADVANCED THREADFORM TECHNOLOGY TYPE.

EDGE DISTANCE AND SPACING DESCRIPTION

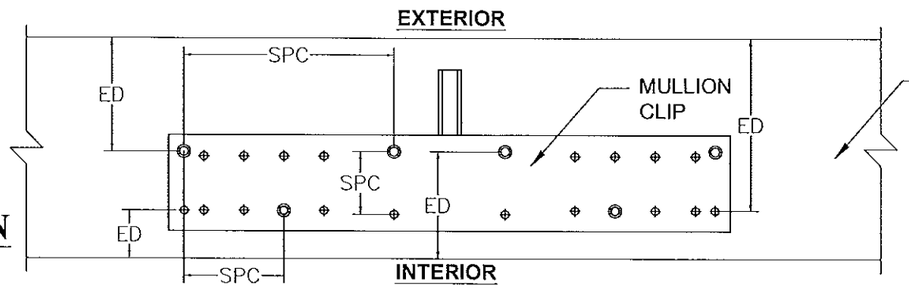

ATTACHMENT SUBSTRATE (WOOD, CONCRETE/MASONRY, STEEL OR ALUMINUM)

EDGE DISTANCES (ED) WILL BE MEASURED FROM CENTERLINE OF ANCHOR TO EDGE OF STRUCTURAL SUBSTRATE (EXCLUDING WALL FINISHES) EITHER TO THE INTERIOR OR EXTERIOR OF THE FENESTRATION PRODUCT.

SPACING (SPC) WILL BE MEASURED FROM THE CLOSEST ADJACENT ANCHORS, CENTERLINE TO CENTERLINE OF ANCHOR.

PROJECT # 411-1205

REV	DESCRIPTION	DATE	BY
A	REVISED PER MD COMMENTS	2/25/14	RJA

PELLA CORPORATION
102 MAIN STREET
PELLA, IA 50219

TITLE: SERIES 350 4-1/2" VINYL WINDOW MULLIONS - IMPACT INSTALLATION ANCHOR SCHEDULE

DRAWN BY: RJA
DATE: 03/04/13
SCALE: N.T.S.
DRAWING NO: PELL0033
REV: A
SHEET: 2 OF 36

PREPARED BY:

PTC PRODUCT DESIGN GROUP, LLC
PO BOX 520773
LONGWOOD, FLORIDA 32752
FSPE C.A. NO. 25803
Phone: 321.860.1738
Fax: 321.860.1788
Email: info@ptc-corp.com

Approved as complying with the Florida Building Code
Date April 17, 2014
NOA# 13-0610.03
Miami Dade Product Control
By Manuel Perez

Robert J. Amoruso, P.E.
Florida P.E. No. 49752

ROBERT JAMES AMORUSO
LICENSE
No 49752
2/25/14
STATE OF FLORIDA
PROFESSIONAL ENGINEER

MULLION END CLIP - ATTACHMENT TO WINDOW FRAME/SUPPORTING SUBSTRATE

FIN, BLOCK AND FLANGE FRAME

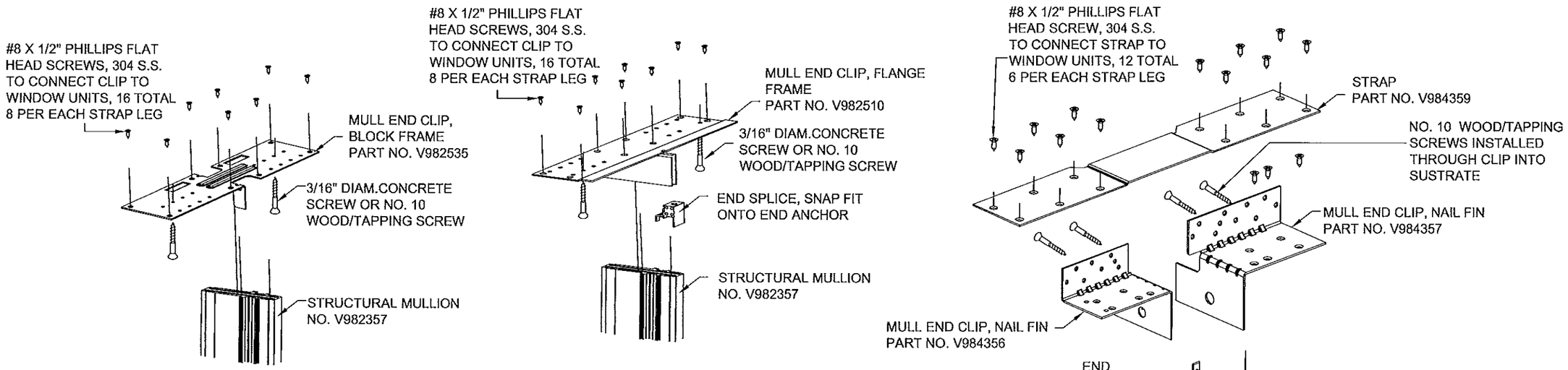

CLIP TO MULLION ATTACHMENT

BLOCK AND FLANGE FRAME

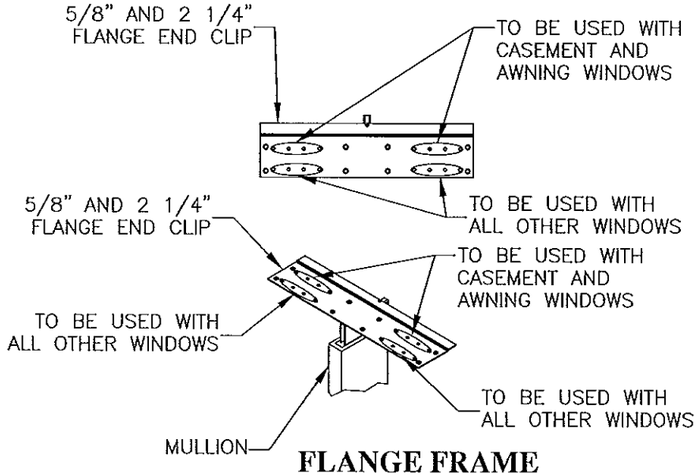

FLANGE FRAME

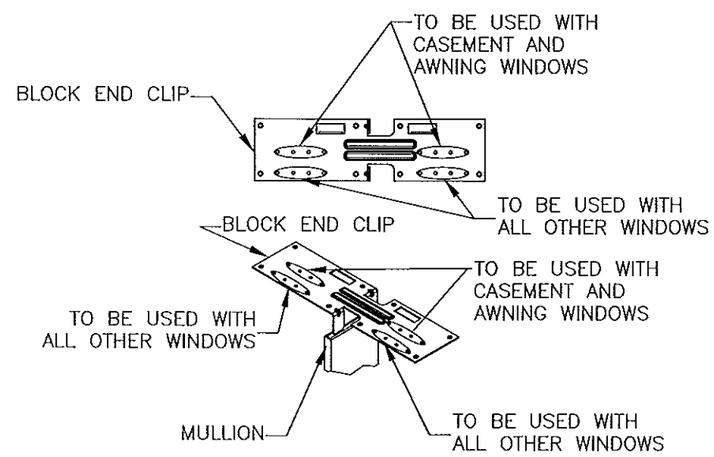

BLOCK FRAME

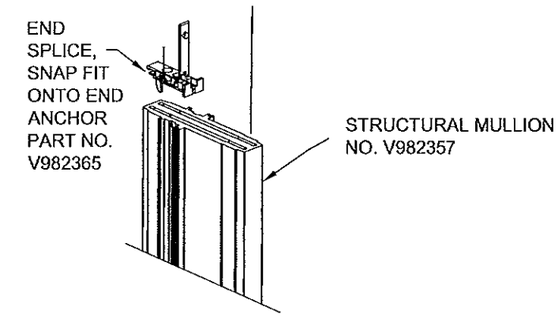

CLIP TO MULLION ATTACHMENT

FIN FRAME

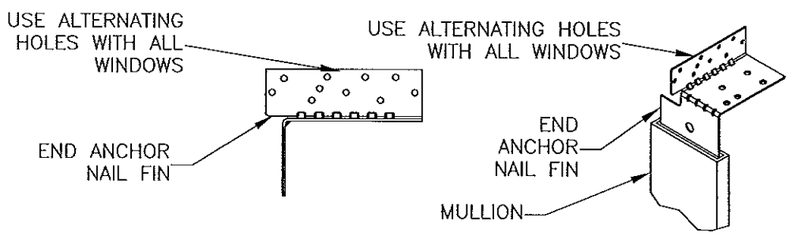

FIN FRAME

SUBSTRATE ANCHOR HOLE DEFINITION

BLOCK, FLANGE AND FIN FRAME

NOTES

1. *CLIP TO MULLION ATTACHMENT* DRAWINGS ABOVE ILLUSTRATE GENERAL ARRANGEMENT OF MULLION END CLIPS, MULLION, MULLION END CLIP SUBSTRATE ANCHORAGE AND MULLION END CLIP-TO-WINDOW ANCHORAGE.
2. *SUBSTRATE ANCHOR HOLE DEFINITION* DRAWING ABOVE ILLUSTRATES WHICH HOLES IN THESE MULTI-HOLE CLIPS ARE UTLIZED FOR SUBSTRATE ANCHORAGE.
3. SEE SHEETS 6 AND 7 FOR SPECIFIC REQUIREMENTS RELATED TO INSTALLATION ANCHORAGE.

PROJECT # 411-1205

REV	DESCRIPTION	DATE	BY
A	REVISED PER MD COMMENTS	2/25/14	RJA

PELLA CORPORATION
102 MAIN STREET
PELLA, IA 50219

TITLE: SERIES 350 4-1/2" VINYL WINDOW MULLIONS - IMPACT
MULLION END CLIP - ATTACHMENT ILLUSTRATIONS

DATE: 03/04/13
DRAWN BY: RJA
DRAWING NO: PELL0033
SCALE: N.T.S.
SHEET: 3 OF 36
REV: A

PREPARED BY:
PTC PRODUCT DESIGN GROUP, LLC
PO BOX 320775
LONGWOOD, FLORIDA 32752
FBPE C.A. NO. 25905
Phone: 321.690.1738
Fax: 321.690.1769
Email: info@ptc-corp.com

Approved as complying with the Florida Building Code
Date April 14, 2014
NOA# 13-0610.03
Miami Dade Product Control
By Manuel Garcia

Robert J. Amoruso, P.E.
Florida P.E. No. 49752

ROBERT JAMES AMORUSO
LICENSE
No 49752
STATE OF FLORIDA
PROFESSIONAL ENGINEER
2/25/14

ATTACHMENT OF WINDOW FRAME TO MULLION
FIN, BLOCK AND FLANGE FRAME

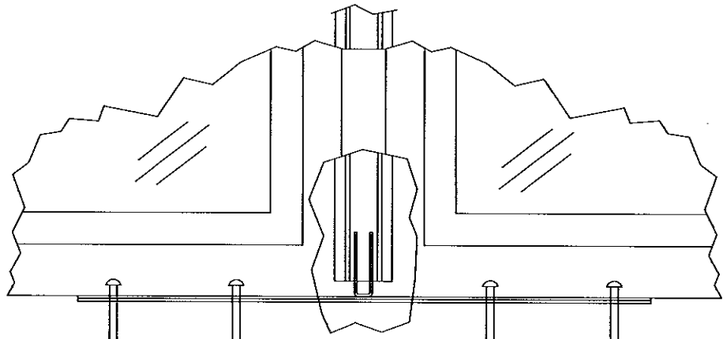

FLANGE FRAME

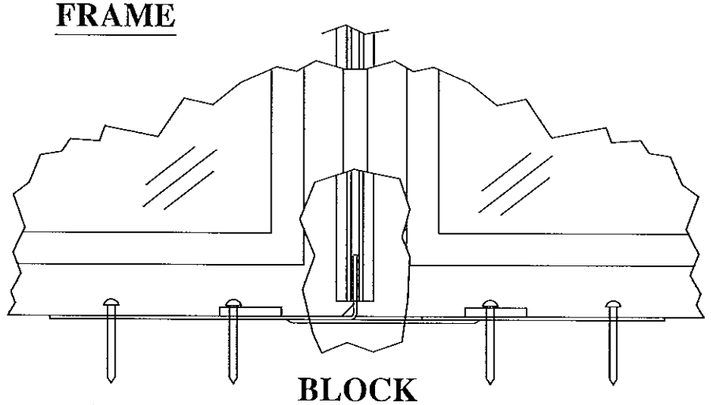

BLOCK FRAME

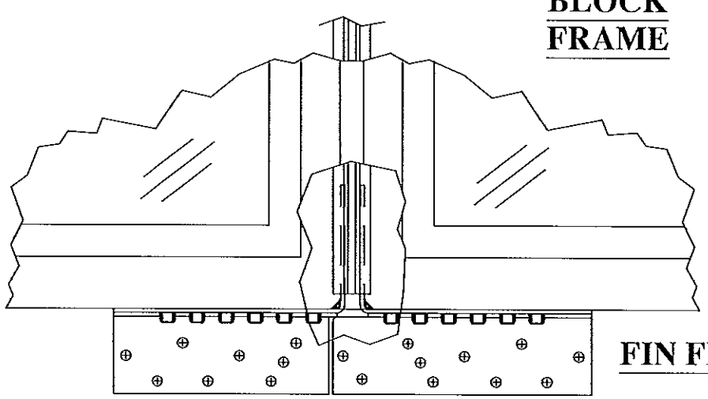

FIN FRAME

ATTACHMENT OF WINDOW FRAME TO MULLION
SERIES 350 WINDOW TO MULLION CROSS-SECTIONS

1" MULLION WITH AND WITHOUT (SHOWN) REINFORCEMENT

Double Hung

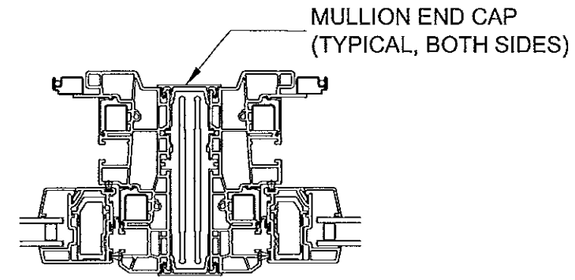

Fixed

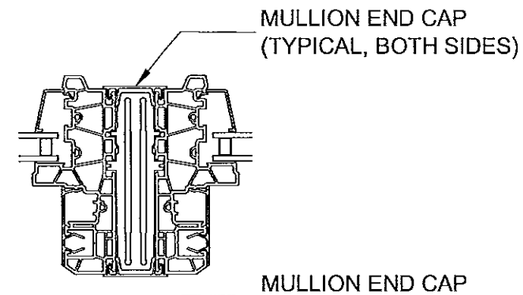

Casement/Awning

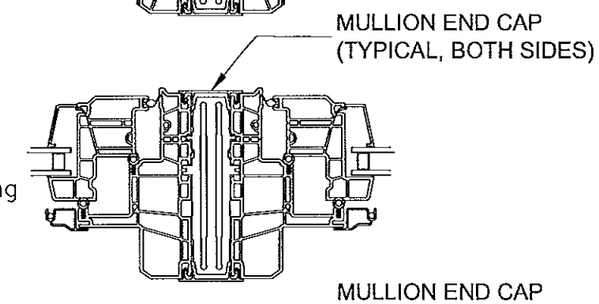

Single Hung

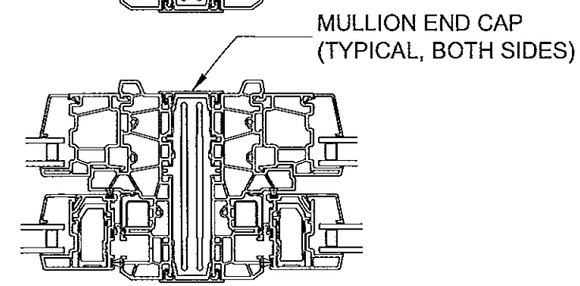

INSTALLATION NOTES

1. ATTACH MULLION CLIP TO THE WINDOW UNIT WITH THE #8 X ½" FLAT HEAD SCREWS AS SHOW ON SHEET 3, CLIP TO MULLION ATTACHMENT DETAILS.
2. DRILL THROUGH THE CLIP INTO THE UNIT TO ALIGN THE HOLE IN THE FRAME (ANCHOR HOLE DEFINITION ON SHEET 3, CLIP TO MULLION ATTACHMENT DETAILS).
3. INSTALL THE WINDOW UNIT IN THE OPENING. OPEN CLEARANCE HOLES THROUGH THE FRAME WHERE THE PRE-DRILLED ANCHOR HOLES WERE PREVIOUSLY PLACED AND DRIVE THE CLIP ANCHORS INTO SUPPORTING SUBSTRATE USING ANCHORS MATCHING THOSE SHOWN IN THE ANCHOR SCHEDULE ON SHEET 2.
4. WINDOW DOES NOT REQUIRE WINDOW TO MULLION ANCHORS DUE TO MULLLION'S KEYED PROFILE TRANSFERING LOADING FROM WINDOW TO MULLION. END CAPS PROVIDE LOAD TRANSFER IN TENSION DUE TO WINDOW/MULLION BENDING.

PROJECT # 411-1205

REV	DESCRIPTION	DATE	BY
A	REVISED PER MD COMMENTS	2/25/14	RJA

PELLA CORPORATION
102 MAIN STREET
PELLA, IA 50219

TITLE: SERIES 350 4-1/2" VINYL WINDOW MULLIONS - IMPACT
WINDOW TO MULLION - ATTACHMENT ILLUSTRATIONS

DRAWN BY: RJA | DATE: 03/04/13
SCALE: N.T.S. | DRAWING NO: PELL0033
REV: A | SHEET: 4 OF 36

PREPARED BY:
PTC PRODUCT DESIGN GROUP, LLC
PO BOX 520775
LONGWOOD, FLORIDA 32752
FBPE C.A. NO. 29935
Phone: 321.890.1789
Fax: 321.690.1789
Email: info@ptc-corp.com

Approved as complying with the Florida Building Code
Date April 7th 2014
NOA# 13-0616.03
Miami Dade Product Control
By Manuel Perez

Robert J. Amoruso, P.E.
Florida P.E. No. 49752

ROBERT JAMES AMORUSO
LICENSE
No 49752
2/25/14
STATE OF FLORIDA
PROFESSIONAL ENGINEER

APPROVED MULLED WINDOW CONFIGURATIONS

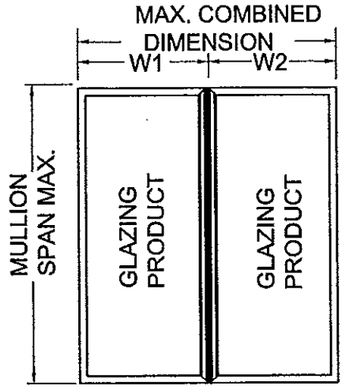

2-WAY VERTICAL MULLION CONFIGURATION

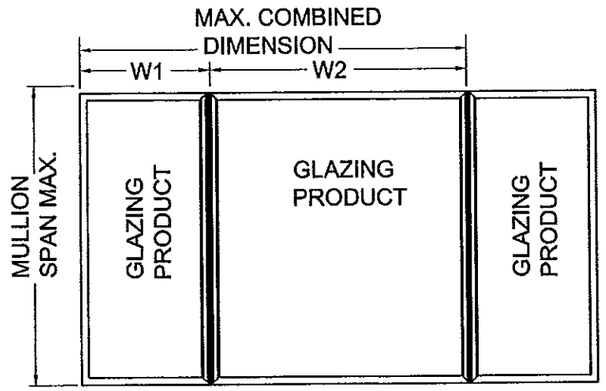

3-WAY VERTICAL MULLION CONFIGURATION

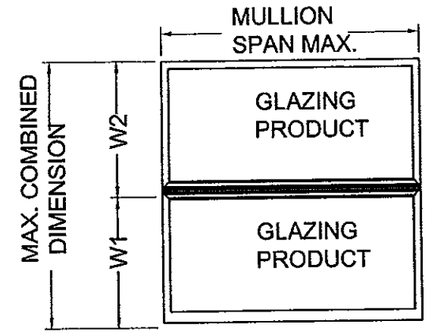

HORIZONTAL MULLION CONFIGURATION

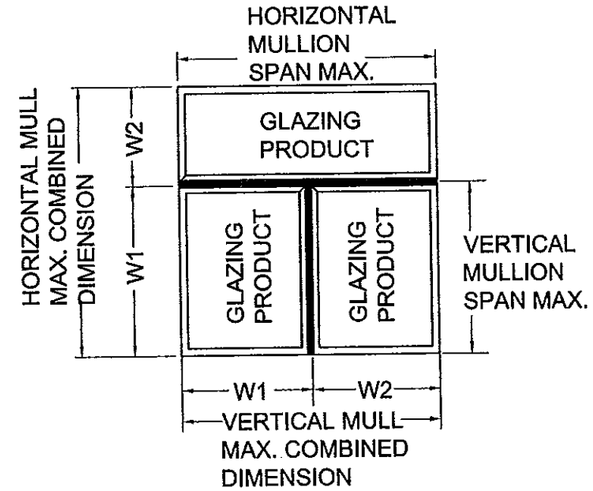

3-WAY MULLION CONFIGURATION (HORIZONTAL MULLION IS CONTINUOUS - VERTICAL MULLION FRAMES INTO HORIZONTAL MULLION AND IS UNCLIPPED, CLIPS USED AT SUBSTRATE ENDS.)

APPROVED WINDOWS

PELLA SERIES 350 HURRICANE SHIELD 4-1/2" VINYL WHITE PVC WINDOWS APPROVED FOR USE WITH THIS MULLION SYSTEM INCLUDE THE FOLLOWING CURRENTLY APPROVED BY MIAMI-DADE NOA.

1. SERIES 350 HURRICANE SHIELD 4-1/2" VINYL WHITE PVC SINGLE HUNG WINDOWS - L.M.I
2. SERIES 350 HURRICANE SHIELD 4-1/2" VINYL WHITE PVC DOUBLE HUNG WINDOWS - L.M.I
3. SERIES 350 HURRICANE SHIELD 4-1/2" VINYL WHITE PVC AWNING WINDOWS - L.M.I
4. SERIES 350 HURRICANE SHIELD 4-1/2" VINYL WHITE PVC CASEMENT WINDOWS - L.M.I

APPROVED STRUCTURAL MULLIONS

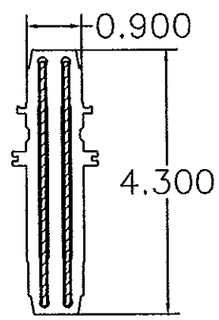

V982357 MULLION W/REINFORCEMENT
MATERIAL: 6063-T6

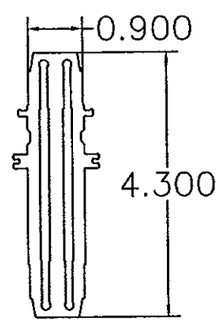

V982357 MULLION W/O REINFORCEMENT
MATERIAL: 6063-T6

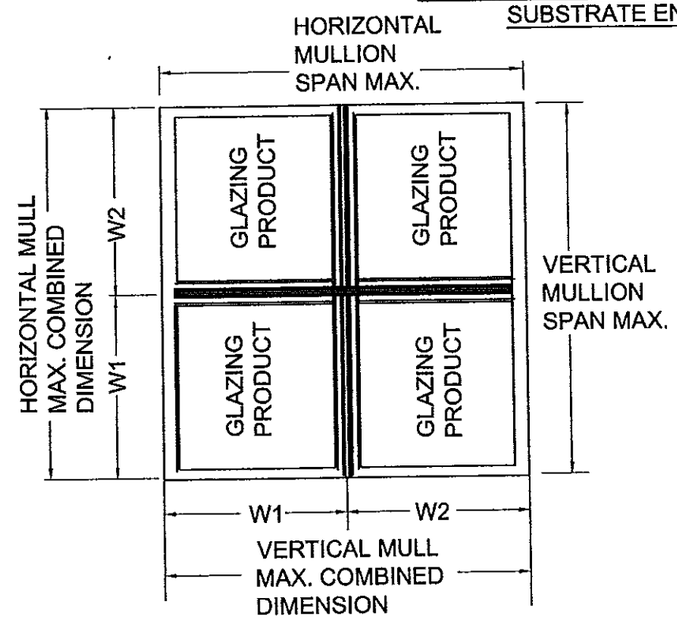

4-WAY MULLION CONFIGURATION (VERTICAL AND HORIZONTAL MULLION IS DISCONTINUOUS AND FRAME INTO 4-WAY UNCLIPPED, CLIPS USED AT SUBSTRATE ENDS.)

PROJECT # 411-1205

REV	DESCRIPTION	DATE	BY
A	REVISED PER MD COMMENTS	2/25/14	RJA

PELLA CORPORATION
102 MAIN STREET
PELLA, IA 50219

TITLE: SERIES 350 4-1/2" VINYL WINDOW MULLIONS - IMPACT APPROVED MULLED WINDOW CONFIGURATIONS AND MULLIONS

DATE: 03/04/13
DRAWN BY: RJA
DRAWING NO: PELL0033
SCALE: N.T.S.
SHEET: 5 OF 36
REV: A

PREPARED BY:
PTC PRODUCT DESIGN GROUP, LLC
PO BOX 520775
LONGWOOD, FLORIDA 32752
PSPC C.A. NO. 26365
Phone: 321.690.1788
Fax: 321.690.1789
Email: info@ptc-corp.com

Approved as complying with the Florida Building Code
Date APR 17 2014
NOA# 13-0610.03
Miami Dade Product Control
By Manuel Perez

Robert J. Amoruso, P.E.
Florida P.E. No. 49752

ROBERT JAMES AMORUSO
LICENSE
No 49752
2/25/14
STATE OF FLORIDA
PROFESSIONAL ENGINEER

V982510 AND V982535 MULLION END CLIP BLOCK AND FLANGE FRAME INSTALLATIONS

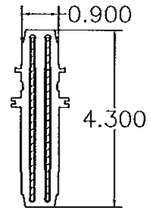

V982357 MULLION W/REINFORCEMENT
MATERIAL: 6063-T6

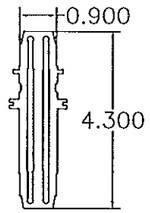

V982357 MULLION W/O REINFORCEMENT
MATERIAL: 6063-T6

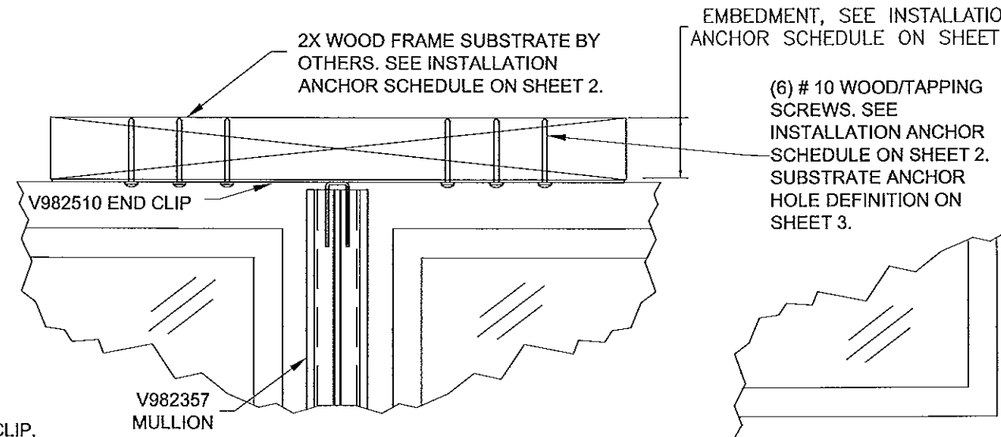

MULL CLIP ATTACHMENT
V982510 SHOWN - V982535 SIMILAR
WOOD FRAME SUBSTRATE
2 BY BUCK OR STUD
FRONT VIEW

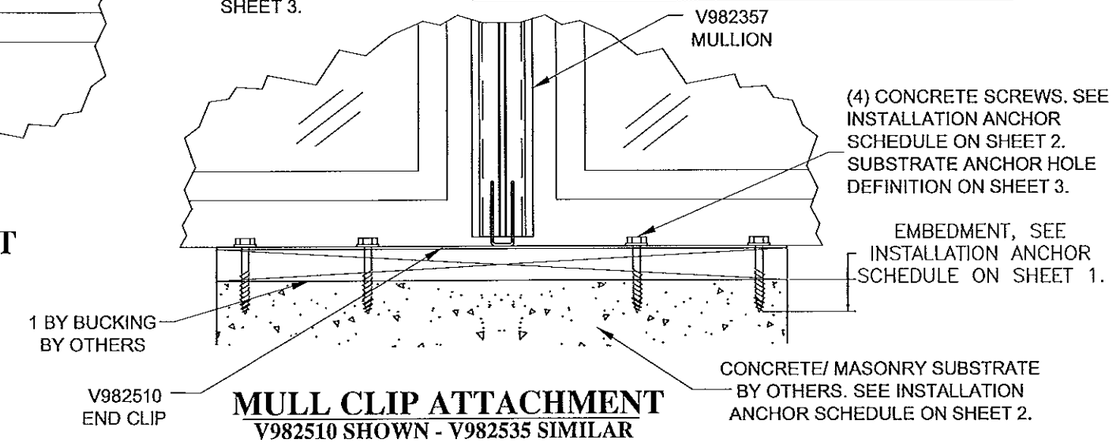

MULL CLIP ATTACHMENT
V982510 SHOWN - V982535 SIMILAR
CONCRETE / MASONRY SUBSTRATE
THROUGH 1 BY BUCK
FRONT VIEW

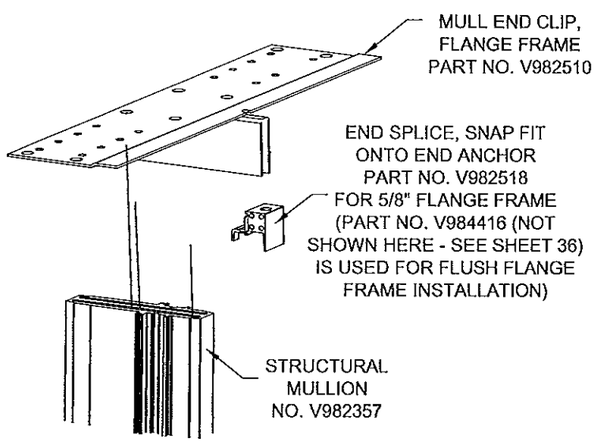

MULLION END CLIP NO. V982510
MATERIAL: 300 SERIES STAINLESS STEEL
FOR CONCRETE/MASONRY SUBSTRATE ANCHORING.
WOOD SUBSTRATE ANCHORING.
MULLION TO STEEL/ALUMINUM SUBSTRATE ANCHORING.

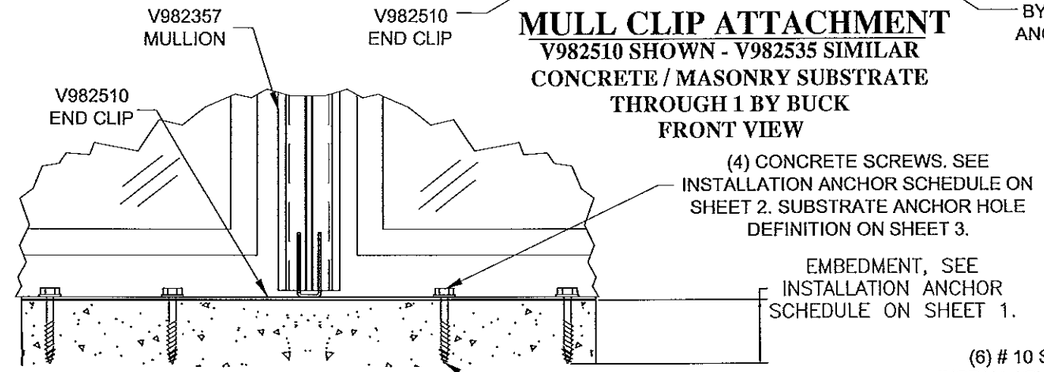

MULL CLIP ATTACHMENT
V982510 SHOWN - V982535 SIMILAR
CONCRETE / MASONRY SUBSTRATE
FRONT VIEW

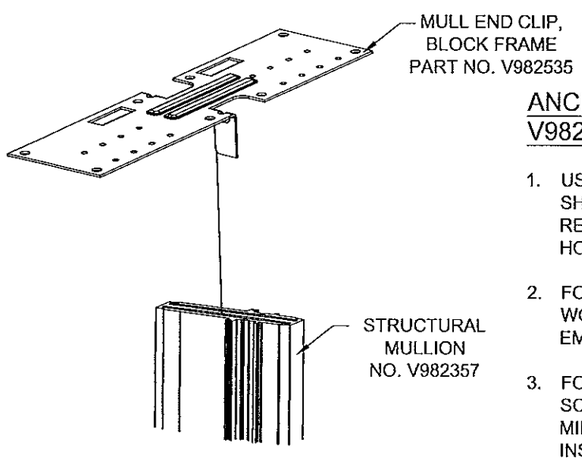

MULLION END CLIP NO. V982535
MATERIAL: 300 SERIES STAINLESS STEEL
FOR CONCRETE/MASONRY SUBSTRATE ANCHORING.
WOOD SUBSTRATE ANCHORING
MULLION TO STEEL/ALUMINUM SUBSTRATE ANCHORING.

ANCHOR NOTES
V982535 AND V982510 MULL END CLIP:

1. USE (1) ONE MULL CLIP INSERTED INTO EACH END OF THE MULLION. SEE DETAIL ON THIS SHEET. SEE INSTALLATION ANCHOR SCHEDULE ON SHEET 2 FOR ADDITIONAL REQUIREMENTS. SUBSTRATE ANCHOR HOLE DEFINITION ON SHEET 3 FOR INSTALLATION HOLE USAGE BASED ON WINDOW TYPE.
2. FOR MULL CLIP ATTACHMENT TO WOOD FRAME SUBSTRATES, USE (3) THREE NO. 10 WOOD/TAPPING SCREWS AT EACH CLIP LEG WITH SUFFICIENT LENGTH TO ACHIEVE A 1-1/2" EMBEDMENT INTO FRAMING. SEE DETAIL ON THIS SHEET.
3. FOR MULL CLIPS INTO CONCRETE / MASONRY INSTALLATION USE (2) TWO 3/16" CONCRETE SCREWS AT EACH CLIP LEG WITH SUFFICIENT LENGTH TO ACHIEVE THE REQUIRED MINIMUM EMBEDMENT INTO CONCRETE / MASONRY SUBSTRATE SHOWN IN THE INSTALLATION ANCHOR SCHEDULE ON SHEET 2. SEE DETAILS ON THIS SHEET.
4. FOR MULL END CLIP ATTACHMENT TO MIN. 1/8" A-36 STEEL, MIN. 20 GAUGE A-653 STEEL STUD AND MIN. 1/8" 6063-T5 ALUMINUM FRAME SUBSTRATES, USE (3) THREE NO. 10 SELF TAPPING SCREWS AT EACH CLIP LEG WITH SUFFICIENT LENGTH TO ACHIEVE 3-THREAD PITCH LENGTH INTO METAL FRAMING. SEE DETAIL ON THIS SHEET.

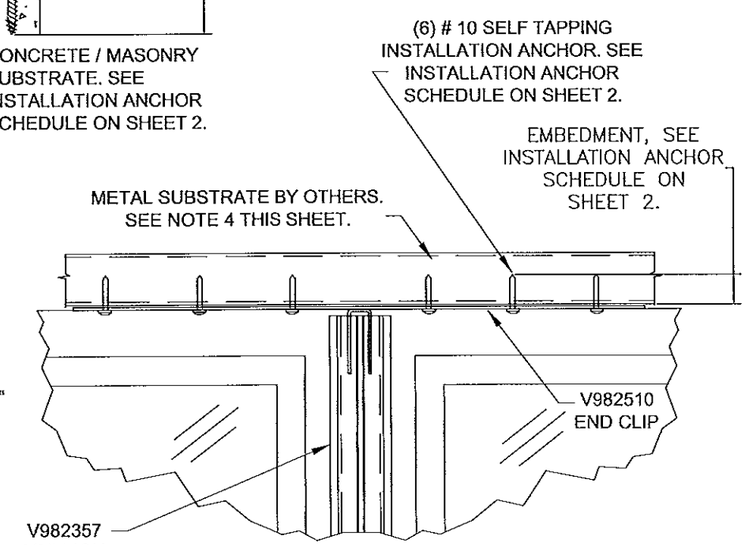

MULL CLIP ATTACHMENT
V982510 SHOWN - V982535 SIMILAR
ALUMINUM/STEEL SUBSTRATE
ATTACHMENT

PROJECT # 411-1205

REV	DESCRIPTION	DATE	BY
A	REVISED PER MD COMMENTS	2/25/14	RJA

PELLA CORPORATION
102 MAIN STREET
PELLA, IA 50219

TITLE: SERIES 350 4-1/2" VINYL WINDOW MULLIONS - IMPACT BLOCK AND FLANGE FRAME INSTALLATIONS DETAILS

DRAWN BY: RJA | DATE: 03/04/13
SCALE: N.T.S. | DRAWING NO: PELL0033
REV: A | SHEET: 6 OF 36

PREPARED BY:
PTC PRODUCT DESIGN GROUP, LLC
PO BOX 520775
LONGWOOD, FLORIDA 32752
FBPE C.A. NO. 29905
Phone: 321.860.1798
Fax: 321.860.1798
Email: info@ptc-corp.com

Approved as complying with the Florida Building Code
Date April 17, 2014
NOA# 13-0610.03
Miami Dade Product Control
By

Robert J. Amoruso, P.E.
Florida P.E. No. 49752

ROBERT JAMES AMORUSO
LICENSE
No 49752
STATE OF FLORIDA
PROFESSIONAL ENGINEER
2/25/14

V984356/V984357 MULLION END CLIP
FIN FRAME INSTALLATIONS

SEE SHEET 8 FOR ADDITIONAL FIN FRAME INSTALLATION

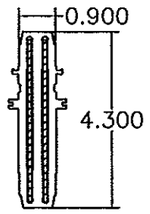

V982357 MULLION W/REINFORCEMENT
MATERIAL: 6063-T6

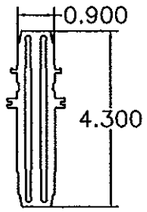

V982357 MULLION W/O REINFORCEMENT
MATERIAL: 6063-T6

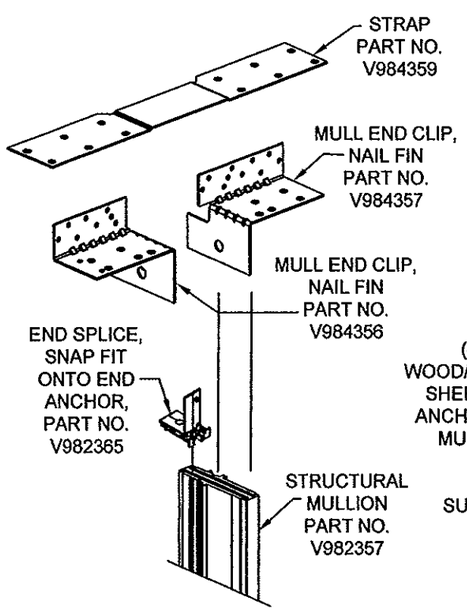

MULLION END CLIP NO. V984356/V984357
MATERIAL: 300 SERIES STAINLESS STEEL FOR WOOD AND METAL SUBSTRATE ANCHORING.

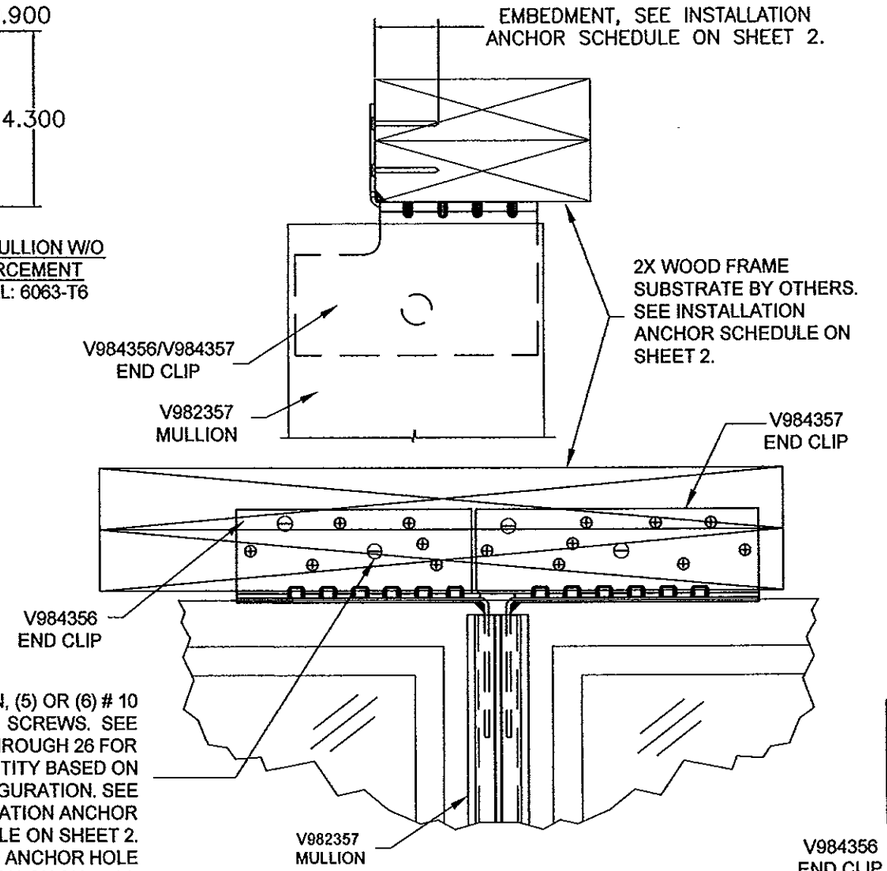

MULL CLIP ATTACHMENT
V984356/V984357
WOOD FRAME SUBSTRATE
2 BY BUCK OR STUD
FRONT VIEW

(4) SHOWN # 10 SELF TAPPING SCREWS - QUANTITY VARIES. SEE SHEETS 21 THROUGH 26 FOR ANCHOR QUANTITY BASED ON MULL CONFIGURATION. SEE INSTALLATION ANCHOR SCHEDULE ON SHEET 2. SUBSTRATE ANCHOR HOLE DEFINITION ON SHEET 3.

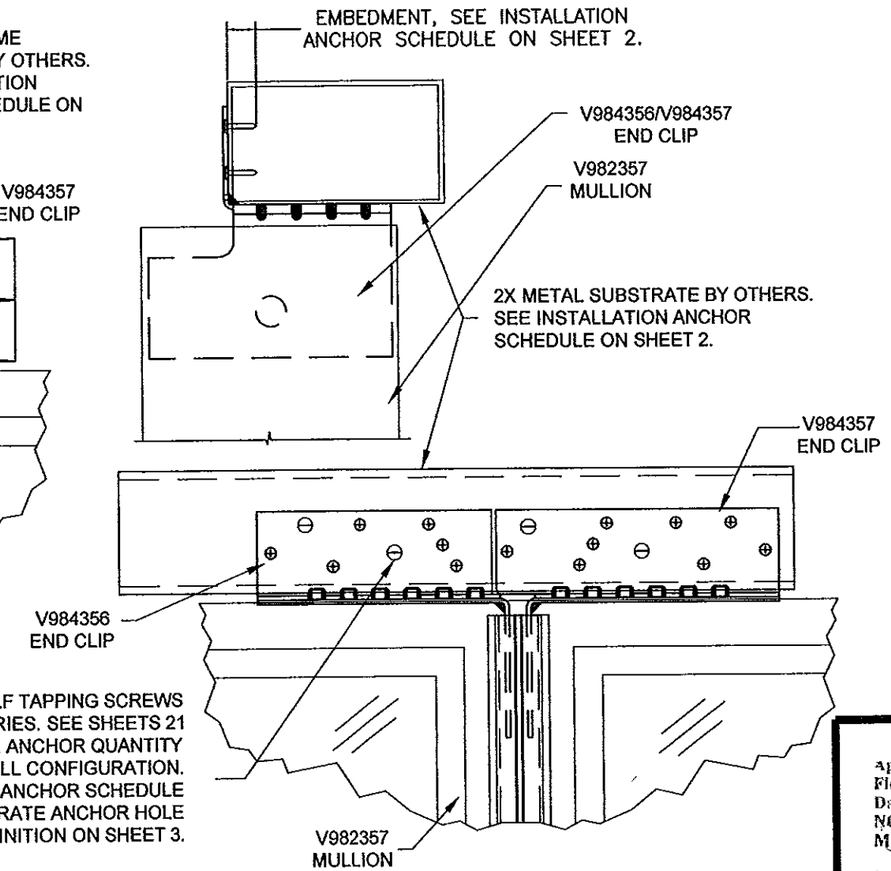

MULL CLIP ATTACHMENT
V982356
ALUMINUM/STEEL SUBSTRATE
FRONT VIEW

ANCHOR NOTES
V984356/V984357 MULL END CLIP:

1. USE (1) ONE OF EACH MULL CLIP NO. V984356 AND V984367 INSERTED INTO EACH END OF THE MULLION. SEE DETAIL ON THIS SHEET. SEE INSTALLATION ANCHOR SCHEDULE ON SHEET 2 FOR ADDITIONAL REQUIREMENTS. SUBSTRATE ANCHOR HOLE DEFINITION ON SHEET 3 FOR INSTALLATION HOLE USAGE.
2. FOR MULL CLIP ATTACHMENT TO WOOD FRAME SUBSTRATES, USE (4) FOUR, (5) FIVE OR (6) SIX NO. 10 WOOD/TAPPING SCREWS AT EACH CLIP LEG WITH SUFFICIENT LENGTH TO ACHIEVE A 1-1/2" EMBEDMENT INTO FRAMING BASED ON MULL CONFIGURATION. SEE SHEETS 21 THROUGH 26 FOR ANCHOR QUANTITY BASED ON MULL CONFIGURATION AND REINFORCEMENT. SEE DETAIL ON THIS SHEET. ANCHORS SHALL BE DIVIDED BETWEEN LH AND RH CLIPS.
3. FOR MULL END CLIP ATTACHMENT TO MIN. 1/8" A-36 STEEL, MIN. 20 GAUGE A-653 STEEL STUD AND MIN. 1/8" 6063-T5 ALUMINUM FRAME SUBSTRATES, USE NO. 10 SELF TAPPING SCREWS AT EACH CLIP LEG WITH SUFFICIENT LENGTH TO ACHIEVE 3-THREAD PITCH LENGTH INTO METAL FRAMING IN QUANTITIES AS SHOWN ON SEE SHEETS 21 THROUGH 26 BASED ON MULL CONFIGURATION AND REINFORCEMENT. SEE DETAIL ON THIS SHEET. ANCHORS SHALL BE DIVIDED BETWEEN LH AND RH CLIPS.

REV	DESCRIPTION	DATE	BY
A	REVISED PER MD COMMENTS	2/25/14	RJA

PROJECT # 411-1205

PELLA CORPORATION
102 MAIN STREET
PELLA, IA 50219

TITLE: SERIES 350 4-1/2" VINYL WINDOW MULLIONS - IMPACT FIN FRAME INSTALLATIONS DETAILS

DRAWN BY: RJA | DATE: 03/04/13
SCALE: N.T.S. | DRAWING NO: PELL0033
REV: A | SHEET: 7 OF 36

PREPARED BY:
PTC PRODUCT DESIGN GROUP, LLC
PO BOX 520775
LONGWOOD, FLORIDA 32752
FBPE C.A. NO. 25635
Phone: 321.690.1788
Fax: 321.690.1789
Email: info@ptc-corp.com

Approved as complying with the Florida Building Code
Date April 17, 2014
NOA# 12-0616.03
Miami Dade Product Control
By

Robert J. Amoruso, P.E.
Florida P.E. No. 49752

ROBERT JAMES AMORUSO
LICENSE
No 49752
2/25/14
STATE OF FLORIDA
PROFESSIONAL ENGINEER

V982356 MULLION END CLIP FIN FRAME INSTALLATIONS ISOMETRIC VIEW

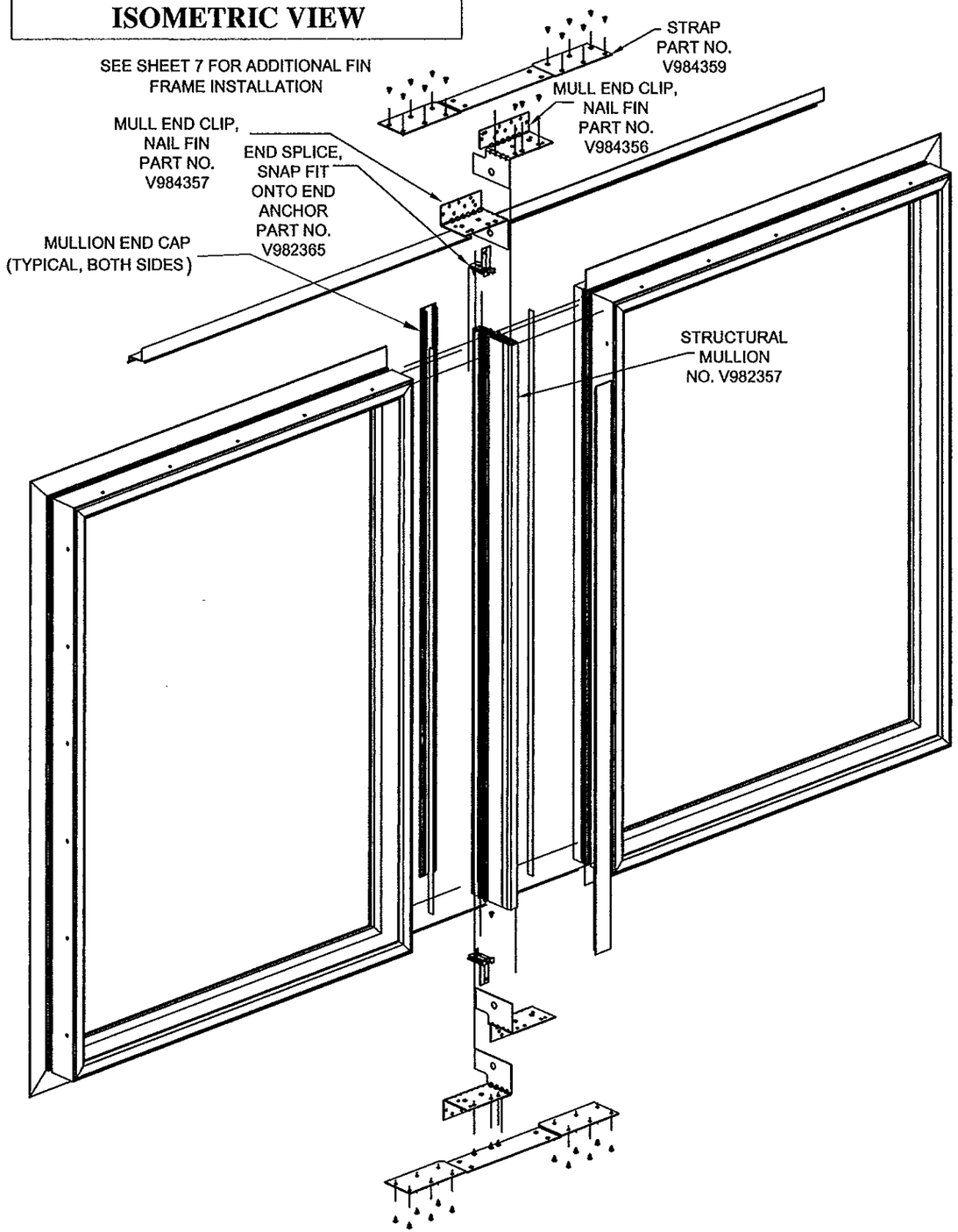

3-WAY AND 4-WAY MULLION ASSEMBLIES

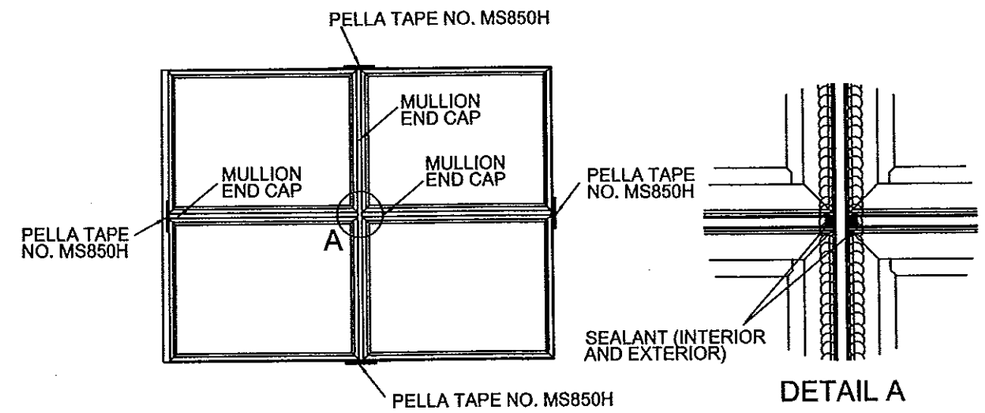

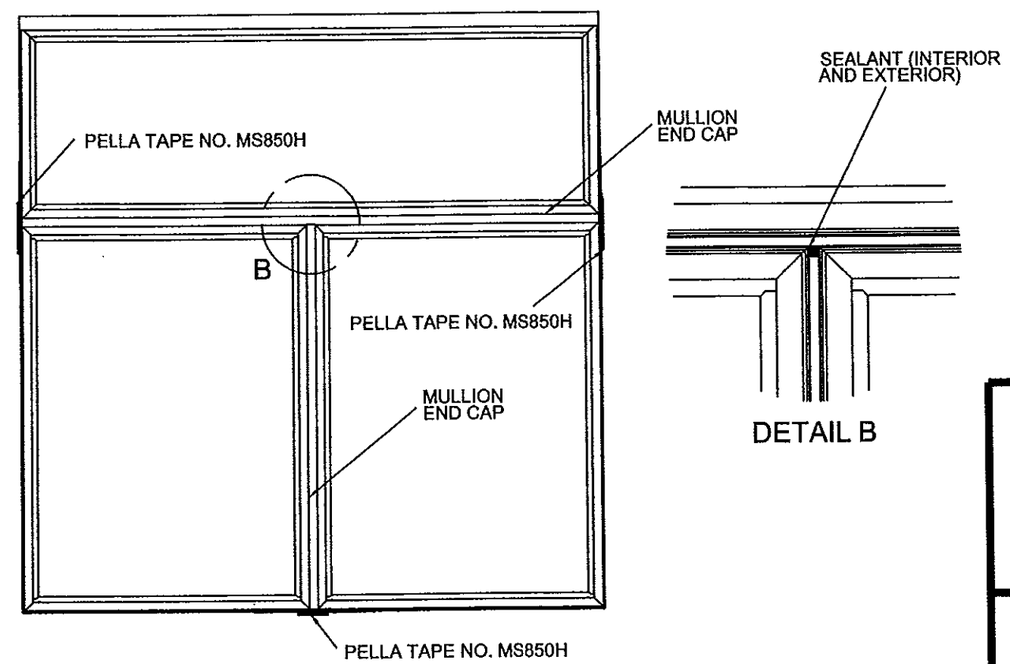

3-WAY AND 4-WAY MULLION ASSEMBLY NOTES - FLANGE, BLOCK AND FIN FRAME:

1. 3-WAY MULLION ASSEMBLY
   - 1.1. VERTICAL MULLION FRAMES INTO HORIZONTAL MULLION.
   - 1.2. VERTICAL MULLION IS NOT CLIPPED TO HORIZONTAL MULLION. SEE SHEET 3 FOR MULLION END CONNECTIONS.
   - 1.3. SEALANT USED BETWEEN VERTICAL AND HORIZONTAL MULLION AND WINDOW UNIT.
   - 1.4. PELLA TAPE NO. MS850H USED AT ENDS OF VERTICAL AND HORIZONTAL MULLION.
2. 4-WAY MULLION ASSEMBLY
   - 2.1. HORIZONTAL AND VERTICAL MULLIONS ARE DISCONTINUOUS AND ARE NOT CLIPPED AT THEIR INSECTIONS. SEE SHEET 3 FOR MULLION END CONNECTIONS.
   - 2.2. SEALANT USED BETWEEN VERTICAL AND HORIZONTAL MULLION AND WINDOW UNIT.
   - 2.3. PELLA TAPE NO. MS850H USED AT ENDS OF VERTICAL AND HORIZONTAL MULLION.

PROJECT # 411-1205

REV	DESCRIPTION	DATE	BY
A	REVISED PER MD COMMENTS	2/25/14	RJA

PELLA CORPORATION
102 MAIN STREET
PELLA, IA 50219

TITLE: SERIES 350 4-1/2" VINYL WINDOW MULLIONS - IMPACT FIN FRAME & MULLION TO MULLION INSTALLATIONS DETAILS

DRAWN BY: RJA | DATE: 03/04/13
SCALE: N.T.S. | DRAWING NO: PELL0033
REV: A | SHEET: 8 OF 36

PREPARED BY:
PTC PRODUCT DESIGN GROUP, LLC
PO BOX 520775
LONGWOOD, FLORIDA 32752
PDPE C.A. NO. 25626
Phone: 321.860.1788
Fax: 321.860.1789
Email: info@ptc-pdg.com

Approved as complying with the Florida Building Code
Date April 17, 2014
NOA# 13-0610.03
Miami Dade Product Control
By Manuel Perez

Robert J. Amoruso, P.E.
Florida P.E. No. 49752

ROBERT JAMES AMORUSO
LICENSE
No 49752
2/25/14
STATE OF FLORIDA
PROFESSIONAL ENGINEER

MULLION CAPACITY LOAD TABLES - INSTRUCTIONS

INSTRUCTIONS FOR USE OF THE MULLION LOAD TABLES ON SHEETS :

1. DETERMINE THE WIND LOAD REQUIREMENT (D.P. PSF) FOR THE PARTICULAR OPENING.
2. FOR THE PARTICULAR OPENING, DETERMINE THE TRIBUTARY WIDTH AND MULLION SPAN. REFERNCE THE SKETCHES ON THE INDIVIDUAL SHEETS FOR MULLION SPAN AND TRIBUTARY WIDTH DETERMINATION.
3. IN THE FIRST COLUMN IN THE TABLE, LOCATE MULLION SPAN. IN FIRST ROW OF THE TABLE , LOCATE THE TRIBUTARY WIDTH. AT THE INTERSECTION OF THE ROW CONTAINING THE TRIBUTARY WIDTH, READ THE MULLION LOAD RATING GIVEN IN PSF. THE MULLION LOAD RATING MUST BE EQUAL TO OR GREATER THAN THE DESIGN LOAD REQUIREMENT DEFINED IN STEP 1 ABOVE.

MULLION CONFIGURATIONS VS. LOAD CAPACITY TABLES ARE DELINEATED BELOW :

1. BASED ON ONE OR FOUR POSSIBILE CONFIGURATIONS BELOW, USE THE CORRESPONDING TABLES TO DETERMINE THE MULLION LOAD CAPACITY AS EXPLAINED ABOVE.
2. CONFIGURATIONS COVERED ARE:
   - 2.1. 1" VERTICAL UNREINFORCED & REINFORCED IN A MULLION MULTI-WIDE CONFIGURATION
   - 2.2. 1" HORIZONTAL UNREINFORCED & REINFORCED MULLION IN A MULTI-HIGH CONFIGURATION
   - 2.3. 1" VERTICAL UNREINFORCED & REINFORCED MULLION IN A TRANSOM OVER A MULTI-WIDE CONFIGURATION
   - 2.4. 1" VERTICAL UNREINFORCED & REINFORCED MULLION IN A 4-WAY MULTI-WIDE, MULTI-HIGH CONFIGURATION

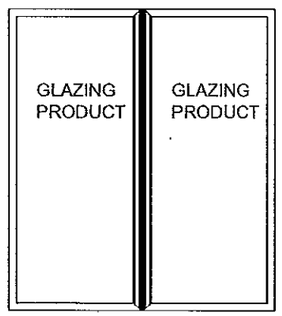

2-WAY VERTICAL MULLION CONFIGURATION

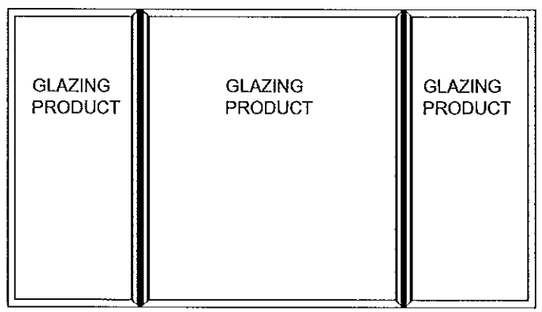

3-WAY VERTICAL MULLION CONFIGURATION

1" VERTICAL UNREINFORCED & REINFORCED IN A MULLION MULTI-WIDE CONFIGURATION

BLOCK (CLIP V982535) AND FLANGE (CLIP V982510) FRAME INSTALLATION

1. UNREINFORCED MULLION
   - 1.1. TABLE 1A FOR WOOD SCREWS AND CONCRETE SCREWS IN CONCRETE SUBSTRATE - SHEET 11
   - 1.2. TABLE 1B FOR CONCRETE SCREWS IN MASONRY (CMU BLOCK) SUBSTRATE - SHEET 11
2. REINFORCED MULLION
   - 2.1. TABLE 5A FOR WOOD SCREWS AND CONCRETE SCREWS IN CONCRETE SUBSTRATE - SHEET 17
   - 2.2. TABLE 5B FOR CONCRETE SCREWS IN MASONRY (CMU BLOCK) SUBSTRATE - SHEET 17

FIN (CLIP V984356/V984357) FRAME INSTALLATION

3. UNREINFORCED AND REINFORCED MULLION
   - 3.1. TABLE 9A UNREINFORCED AND REINFORCED MULLION - SHEET 23
   - 3.2. TABLE 9B REINFORCED AND REINFORCED MULLION - SHEET 23

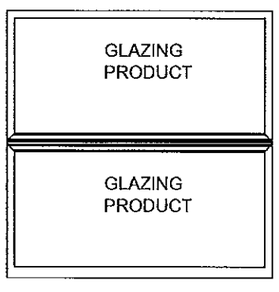

HORIZONTAL MULLION CONFIGURATION

1" HORIZONTAL UNREINFORCED & REINFORCED MULLION IN A MULTI-HIGH CONFIGURATION

BLOCK (CLIP V982535) AND FLANGE (CLIP V982510) FRAME INSTALLATION

1. UNREINFORCED MULLION
   - 1.1. TABLE 2A FOR WOOD SCREWS AND CONCRETE SCREWS IN CONCRETE SUBSTRATE - SHEET 12
   - 1.2. TABLE 2B FOR CONCRETE SCREWS IN MASONRY (CMU BLOCK) SUBSTRATE - SHEET 12
2. REINFORCED MULLION
   - 2.1. TABLE 6A FOR WOOD SCREWS AND CONCRETE SCREWS IN CONCRETE SUBSTRATE - SHEET 18
   - 2.2. TABLE 6B FOR CONCRETE SCREWS IN MASONRY (CMU BLOCK) SUBSTRATE - SHEET 18

FIN (CLIP V984356/V984357) FRAME INSTALLATION

3. UNREINFORCED AND REINFORCED MULLION
   - 3.1. TABLE 10A UNREINFORCED AND REINFORCED MULLION - SHEET 24
   - 3.2. TABLE 10B REINFORCED AND REINFORCED MULLION - SHEET 24

MULLION CONFIGURATIONS VS. LOAD CAPACITY TABLES ANCHORAGE REQUIREMENTS :

1. EACH LOAD CAPACITY TABLE SHEET HAS A CORRESPONDING *ANCHOR QUANTITIES (PER END CLIP)* TABLE.
2. USE THIS TABLE TO INSTALL THE REQUISTE NUMBER OF ANCHORS TO ACHIEVE THE LOAD CAPACITY.
3. ANCHOR INSTALLATION IS SHOWN ON SHEET 5 AND 6.
4. SEE SHEET 3 FOR ADDITIONAL INFORMATION RELATED TO INSTALLATION.
5. SEE SHEET 2 FOR ANCHOR SCHEDULE.

PROJECT # 411-1205

REV	DESCRIPTION	DATE	BY
A	REVISED PER MD COMMENTS	2/25/14	RJA

PELLA CORPORATION
102 MAIN STREET
PELLA, IA 50219

TITLE: SERIES 350 4-1/2" VINYL WINDOW MULLIONS - IMPACT MULLION CAPACITY LOAD TABLES - INSTRUCTIONS

DRAWN BY: RJA | DATE: 03/04/13
SCALE: N.T.S. | DRAWING NO: PELL0033
REV: A | SHEET: 9 OF 36

PREPARED BY:
PTC PRODUCT DESIGN GROUP, LLC
PO BOX 520773
LONGWOOD, FLORIDA 32752
FBPE C.A. NO. 28365
Phone: 321.690.1786
Fax: 321.690.1788
Email: info@ptc-corp.com

Approved as complying with the Florida Building Code
Date April 17, 2014
NOA# 13-0610.03
Miami Dade Product Control
By Manuel Sires

Robert J. Amoruso, P.E.
Florida P.E. No. 49752

ROBERT JAMES AMORUSO
LICENSE
No 49752
2/25/14
STATE OF FLORIDA
PROFESSIONAL ENGINEER

MULLION CAPACITY LOAD TABLES - INSTRUCTIONS

SEE SHEET 9 FOR ADDITIONAL INSTRUCTIONS

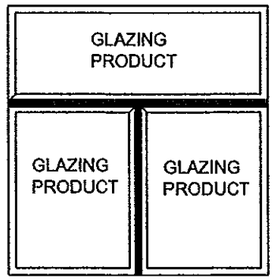

3-WAY MULLION CONFIGURATION

1" VERTICAL / HORIZONTAL UNREINFORCED & REINFORCED MULLION IN A TRANSOM OVER A MULTI-WIDE CONFIGURATION

BLOCK (CLIP V982535) AND FLANGE (CLIP V982510) FRAME INSTALLATION

1. UNREINFORCED VERTICAL MULLION
   - 1.1. TABLE 3.1A FOR WOOD SCREWS AND CONCRETE SCREWS IN CONCRETE SUBSTRATE - SHEET 13
   - 1.2. TABLE 3.1B FOR CONCRETE SCREWS IN MASONRY (CMU BLOCK) SUBSTRATE - SHEET13
2. REINFORCED VERTICAL MULLION
   - 2.1. TABLE 7.1A FOR WOOD SCREWS AND CONCRETE SCREWS IN CONCRETE SUBSTRATE - SHEET 19
   - 2.2. TABLE 7.1B FOR CONCRETE SCREWS IN MASONRY (CMU BLOCK) SUBSTRATE - SHEET 19
3. UNREINFORCED HORIZIONTAL MULLION
   - 3.1. TABLE 3.2A FOR WOOD SCREWS AND CONCRETE SCREWS IN CONCRETE SUBSTRATE - SHEET 14
   - 3.2. TABLE 3.2B FOR CONCRETE SCREWS IN MASONRY (CMU BLOCK) SUBSTRATE - SHEET 14
4. REINFORCED HORIZIONTAL MULLION
   - 4.1. TABLE 7.2A FOR WOOD SCREWS AND CONCRETE SCREWS IN CONCRETE SUBSTRATE - SHEET 20
   - 4.2. TABLE 7.2B FOR CONCRETE SCREWS IN MASONRY (CMU BLOCK) SUBSTRATE - SHEET 20

FIN (CLIP V984356/V984357) FRAME INSTALLATION

5. UNREINFORCED AND REINFORCED VERTICAL MULLION
   - 5.1. TABLE 11.1A UNREINFORCED MULLION FOR ALL SUBSTRATES - SHEET 25
   - 5.2. TABLE 11.1B REINFORCED MULLION FOR ALL SUBSTRATES - SHEET 25
6. UNREINFORCED AND REINFORCED HORIZONTAL MULLION
   - 6.1. TABLE 11.2A UNREINFORCED MULLION FOR ALL SUBSTRATES - SHEET 26
   - 6.2. TABLE 11.2B REINFORCED MULLION FOR ALL SUBSTRATES - SHEET 26

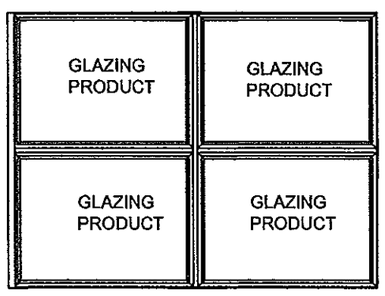

4-WAY MULLION CONFIGURATION

1" VERTICAL/HORIZONTAL UNREINFORCED & REINFORCED MULLION IN A 4-WAY MULTI-WIDE, MULTI-HIGH CONFIGURATION

BLOCK (CLIP V982535) AND FLANGE (CLIP V982510) FRAME INSTALLATION

1. UNREINFORCED VERTICAL MULLION
   - 1.1. TABLE 4.1A FOR WOOD SCREWS AND CONCRETE SCREWS IN CONCRETE SUBSTRATE - SHEET 15
   - 1.2. TABLE 4.1B FOR CONCRETE SCREWS IN MASONRY (CMU BLOCK) SUBSTRATE - SHEET 15
2. REINFORCED VERTICAL MULLION
   - 2.1. TABLE 8.1A FOR WOOD SCREWS AND CONCRETE SCREWS IN CONCRETE SUBSTRATE - SHEET 21
   - 2.2. TABLE 8.1B FOR CONCRETE SCREWS IN MASONRY (CMU BLOCK) SUBSTRATE - SHEET 21
3. UNREINFORCED HORIZIONTAL MULLION
   - 3.1. TABLE 4.2A FOR WOOD SCREWS AND CONCRETE SCREWS IN CONCRETE SUBSTRATE - SHEET 16
   - 3.2. TABLE 4.2B FOR CONCRETE SCREWS IN MASONRY (CMU BLOCK) SUBSTRATE - SHEET 16
4. REINFORCED HORIZIONTAL MULLION
   - 4.1. TABLE 8.2A FOR WOOD SCREWS AND CONCRETE SCREWS IN CONCRETE SUBSTRATE - SHEET 22
   - 4.2. TABLE 8.2B FOR CONCRETE SCREWS IN MASONRY (CMU BLOCK) SUBSTRATE - SHEET 22

FIN (CLIP V984356/V984357) FRAME INSTALLATION

5. UNREINFORCED AND REINFORCED VERTICAL MULLION
   - 5.1. TABLE 12.1A UNREINFORCED MULLION FOR ALL SUBSTRATES - SHEET 27
   - 5.2. TABLE 12.1B REINFORCED MULLION FOR ALL SUBSTRATES - SHEET 27
6. UNREINFORCED AND REINFORCED HORIZONTAL MULLION
   - 6.1. TABLE 12.2A UNREINFORCED MULLION FOR ALL SUBSTRATES - SHEET 28
   - 6.2. TABLE 12.2B REINFORCED MULLION FOR ALL SUBSTRATES - SHEET 28

PROJECT # 411-1205

REV	DESCRIPTION	DATE	BY
A	REVISED PER MD COMMENTS	2/25/14	RJA

PELLA CORPORATION
102 MAIN STREET
PELLA, IA 50219

TITLE: SERIES 350 4-1/2" VINYL WINDOW MULLIONS - IMPACT
MULLION CAPACITY LOAD TABLES - INSTRUCTIONS (CONT.)

DRAWN BY: RJA | DATE: 03/04/13
SCALE: N.T.S. | DRAWING NO: PELL0033
REV: A | SHEET: 10 OF 36

PREPARED BY:
PTC PRODUCT DESIGN GROUP, LLC
PO BOX 520775
LONGWOOD, FLORIDA 32752
FBPE C.A. NO. 25935
Phone: 321.860.1788
Fax: 321.860.1789
Email: info@ptc-pdg.com

Approved in compliance with the Florida Building Code
Date APRIL 17, 2014
NOA# 13-0610.03
Miami Dade Product Control
By Manuel Sarg

Robert J. Amoruso, P.E.
Florida P.E. No. 49752

ROBERT JAMES AMORUSO
LICENSE
No 49752
STATE OF FLORIDA
PROFESSIONAL ENGINEER
2/25/14

1" VERTICAL UNREINFORCED MULLION
MULTI-WIDE CONFIGURATION

BLOCK FRAME (CLIP V982535) AND FLANGE FRAME (CLIP V982510) INSTALLATION

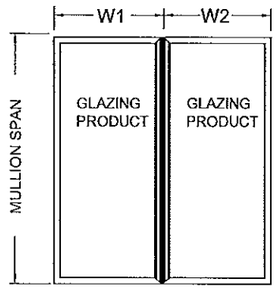

$$\text{LOAD WIDTH} = \frac{W1 + W2}{2}$$

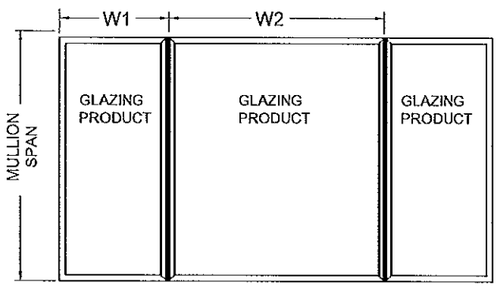

ANCHOR QUANTITIES (PER CLIP END)		
SUBSTRATE	ANCHOR	MIN. QUANTITY
CONCRETE	CONCRETE SCREW	4
MASONRY (CMU BLOCK)	CONCRETE SCREW	4
WOOD	WOOD OR TAPPING SCREW	6
1/8" THICK ASTM A-36	TAPPING SCREW	6
1/8" THICK 6063-T5	TAPPING SCREW	6
0.0346" THICK ASTM A-653, 33 KSI (STEEL STUDS)	TAPPING SCREW	6
1) SEE ANCHOR SCHEDULE FOR FASTENER REQUIREMENTS.		
2) ANCHOR QUANTITIES ARE FOR EACH CLIP END.		

MULLION TABLE 1A - WOOD SCREWS & CONCRETE SCREWS/CONCRETE
(VERTICAL SPAN — 1" Aluminum Reinforcing Mull)

MULL SPAN	LOAD WIDTH	DP (PSF)	MULL SPAN	LOAD WIDTH	DP (PSF)	MULL SPAN	LOAD WIDTH	DP (PSF)
24	24	75.0	60	24	75.0	96	24	75.0
	30	75.0		30	75.0		30	75.0
	36	75.0		36	75.0		36	75.0
	42	75.0		42	75.0		42	71.3
	48	75.0		48	75.0		48	65.0
	54	75.0		54	75.0		54	60.3
	60	75.0		60	75.0		60	56.7
	66	75.0		66	75.0		66	54.0
	72	75.0		72	75.0		72	52.0
30	24	75.0	66	24	75.0	102	24	75.0
	30	75.0		30	75.0		30	75.0
	36	75.0		36	75.0		36	74.3
	42	75.0		42	75.0		42	65.6
	48	75.0		48	75.0		48	58.6
	54	75.0		54	75.0		54	53.4
	60	75.0		60	75.0		60	49.4
	66	75.0		66	75.0		66	46.4
	72	75.0		72	75.0		72	44.0
36	24	75.0	72	24	75.0	108	24	75.0
	30	75.0		30	75.0		30	74.4
	36	75.0		36	75.0		36	62.9
	42	75.0		42	75.0		42	54.8
	48	75.0		48	75.0		48	48.9
	54	75.0		54	75.0		54	44.4
	60	75.0		60	75.0		60	41.0
	66	75.0		66	75.0		66	38.3
	72	75.0		72	75.0		72	36.2
42	24	75.0	78	24	75.0	114	24	75.0
	30	75.0		30	75.0		30	63.1
	36	75.0		36	75.0		36	53.2
	42	75.0		42	75.0		42	46.3
	48	75.0		48	75.0		48	41.2
	54	75.0		54	75.0		54	37.4
	60	75.0		60	75.0		60	34.4
	66	75.0		66	75.0		66	32.0
	72	75.0		72	74.3		72	30.2
48	24	75.0	84	24	75.0	120	24	66.8
	30	75.0		30	75.0		30	53.9
	36	75.0		36	75.0		36	45.5
	42	75.0		42	75.0		42	39.5
	48	75.0		48	75.0		48	35.1
	54	75.0		54	73.0		54	31.7
	60	75.0		60	69.3		60	29.1
	66	75.0		66	66.7		66	27.1
	72	75.0		72	65.0		72	25.5
54	24	75.0	90	24	75.0			
	30	75.0		30	75.0			
	36	75.0		36	75.0			
	42	75.0		42	75.0			
	48	75.0		48	70.9			
	54	75.0		54	66.0			
	60	75.0		60	62.4			
	66	75.0		66	59.7			
	72	75.0		72	57.8			

MULLION TABLE 1B - CONCRETE SCREWS/MASONRY (CMU BLOCK)
(VERTICAL SPAN — 1" Aluminum Reinforcing Mull)

MULL SPAN	LOAD WIDTH	DP (PSF)	MULL SPAN	LOAD WIDTH	DP (PSF)	MULL SPAN	LOAD WIDTH	DP (PSF)
24	24	75.0	60	24	75.0	96	24	75.0
	30	75.0		30	75.0		30	64.0
	36	75.0		36	75.0		36	55.4
	42	75.0		42	75.0		42	49.4
	48	75.0		48	75.0		48	45.0
	54	75.0		54	75.0		54	41.7
	60	75.0		60	75.0		60	39.3
	66	75.0		66	75.0		66	37.4
	72	75.0		72	75.0		72	36.0
30	24	75.0	66	24	75.0	102	24	72.0
	30	75.0		30	75.0		30	59.6
	36	75.0		36	75.0		36	51.4
	42	75.0		42	75.0		42	45.7
	48	75.0		48	75.0		48	41.5
	54	75.0		54	73.8		54	38.4
	60	75.0		60	72.0		60	36.0
	66	75.0		66	71.4		66	34.2
	72	75.0		72	71.4		72	32.7
36	24	75.0	72	24	75.0	108	24	67.5
	30	75.0		30	75.0		30	55.7
	36	75.0		36	75.0		36	48.0
	42	75.0		42	72.6		42	42.6
	48	75.0		48	67.5		48	38.6
	54	75.0		54	64.0		54	35.6
	60	75.0		60	61.7		60	33.2
	66	75.0		66	60.4		66	31.4
	72	75.0		72	60.0		72	30.0
42	24	75.0	78	24	75.0	114	24	63.5
	30	75.0		30	75.0		30	52.4
	36	75.0		36	72.0		36	45.0
	42	75.0		42	65.0		42	39.8
	48	75.0		48	60.0		48	36.0
	54	75.0		54	56.5		54	33.1
	60	75.0		60	54.0		60	30.9
	66	75.0		66	52.4		66	29.1
	72	75.0		72	51.4		72	27.7
48	24	75.0	84	24	75.0	120	24	60.0
	30	75.0		30	75.0		30	49.4
	36	75.0		36	65.5		36	42.4
	42	75.0		42	58.8		42	37.4
	48	75.0		48	54.0		48	33.8
	54	75.0		54	50.5		54	31.0
	60	75.0		60	48.0		60	28.8
	66	75.0		66	46.2		66	27.1
	72	75.0		72	45.0		72	25.5
54	24	75.0	90	24	75.0			
	30	75.0		30	69.1			
	36	75.0		36	60.0			
	42	75.0		42	53.7			
	48	75.0		48	49.1			
	54	75.0		54	45.7			
	60	75.0		60	43.2			
	66	75.0		66	41.3			
	72	75.0		72	40.0			

PROJECT # 411-1205

REV	DESCRIPTION	DATE	BY
A	REVISED PER MD COMMENTS	2/25/14	RJA

PELLA CORPORATION
102 MAIN STREET
PELLA, IA 50219

TITLE: SERIES 350 4-1/2" VINYL WINDOW MULLIONS - IMPACT BLOCK/FLANGE FRAME - UNREINF. MULL - TABLE 1A/B

DATE: 03/04/13
DRAWING NO: PELL0033
SHEET: 11 OF 36
DRAWN BY: RJA
SCALE: N.T.S.
REV: A

PREPARED BY:
PTC PRODUCT DESIGN GROUP, LLC
PO BOX 520775
LONGWOOD, FLORIDA 32752
FBPE C.A. NO. 25805
Phone: 321.690.1788
Fax: 321.690.1789
Email: info@ptc-corp.com

Approved as complying with the Florida Building Code
Date April 17, 2014
(DOAH) 3-0616.02
Miami-Dade Product Control
By Manuel Perez

Robert J. Amoruso, P.E.
Florida P.E. No. 49752

ROBERT JAMES AMORUSO
LICENSE
No 49752
STATE OF
FLORIDA
PROFESSIONAL ENGINEER

1" HORIZONTAL UNREINFORCED MULLION MULTI-HIGH CONFIGURATION

BLOCK FRAME (CLIP V982535) AND FLANGE FRAME (CLIP V982510) INSTALLATION

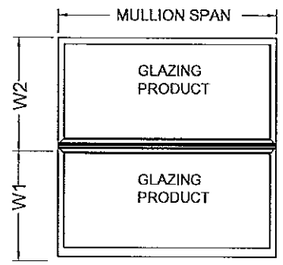

$$\text{LOAD WIDTH} = \frac{W1 + W2}{2}$$

MULLION TABLE 2A - WOOD SCREWS & CONCRETE SCREWS/CONCRETE
(HORIZONTAL SPAN — 1" Aluminum Reinforcing Mull)

MULL SPAN	LOAD WIDTH	DP (PSF)	MULL SPAN	LOAD WIDTH	DP (PSF)	MULL SPAN	LOAD WIDTH	DP (PSF)
48	24	75.0	72	24	75.0	96	24	75.0
	30	75.0		30	75.0		30	75.0
	36	75.0		36	75.0		36	75.0
	42	75.0		42	75.0		42	71.3
	48	75.0		48	75.0		48	65.0
	54	75.0		54	75.0		54	60.3
	60	75.0		60	75.0		60	56.7
	66	75.0		66	75.0		66	54.0
54	24	75.0	78	24	75.0	102	24	75.0
	30	75.0		30	75.0		30	75.0
	36	75.0		36	75.0		36	74.3
	42	75.0		42	75.0		42	65.6
	48	75.0		48	75.0		48	58.6
	54	75.0		54	75.0		54	53.4
	60	75.0		60	75.0		60	49.4
	66	75.0		66	75.0		66	46.4
60	24	75.0	84	24	75.0	108	24	75.0
	30	75.0		30	75.0		30	74.4
	36	75.0		36	75.0		36	62.9
	42	75.0		42	75.0		42	54.8
	48	75.0		48	75.0		48	48.9
	54	75.0		54	73.0		54	44.4
	60	75.0		60	69.3		60	41.0
	66	75.0		66	66.7		66	38.3
66	24	75.0	90	24	75.0	114	24	75.0
	30	75.0		30	75.0		30	63.1
	36	75.0		36	75.0		36	53.2
	42	75.0		42	75.0		42	46.3
	48	75.0		48	70.9		48	41.2
	54	75.0		54	66.0		54	37.4
	60	75.0		60	62.4		60	34.4
	66	75.0		66	59.7		66	32.0
						120	24	66.8
							30	53.9
							36	45.5
							42	39.5
							48	35.1
							54	31.7
							60	29.1
							66	27.1

MULLION TABLE 2B - CONCRETE SCREWS/MASONRY (CMU BLOCK)
(HORIZONTAL SPAN — 1" Aluminum Reinforcing Mull)

MULL SPAN	LOAD WIDTH	DP (PSF)	MULL SPAN	LOAD WIDTH	DP (PSF)	MULL SPAN	LOAD WIDTH	DP (PSF)
48	24	75.0	72	24	75.0	96	24	75.0
	30	75.0		30	75.0		30	64.0
	36	75.0		36	75.0		36	55.4
	42	75.0		42	72.6		42	49.4
	48	75.0		48	67.5		48	45.0
	54	75.0		54	64.0		54	41.7
	60	75.0		60	61.7		60	39.3
	66	75.0		66	60.4		66	37.4
54	24	75.0	78	24	75.0	102	24	72.0
	30	75.0		30	75.0		30	59.6
	36	75.0		36	72.0		36	51.4
	42	75.0		42	65.0		42	45.7
	48	75.0		48	60.0		48	41.5
	54	75.0		54	56.5		54	38.4
	60	75.0		60	54.0		60	36.0
	66	75.0		66	52.4		66	34.2
60	24	75.0	84	24	75.0	108	24	67.5
	30	75.0		30	75.0		30	55.7
	36	75.0		36	65.5		36	48.0
	42	75.0		42	58.8		42	42.6
	48	75.0		48	54.0		48	38.6
	54	75.0		54	50.5		54	35.6
	60	75.0		60	48.0		60	33.2
	66	75.0		66	46.2		66	31.4
66	24	75.0	90	24	75.0	114	24	63.5
	30	75.0		30	69.1		30	52.4
	36	75.0		36	60.0		36	45.0
	42	75.0		42	53.7		42	39.8
	48	75.0		48	49.1		48	36.0
	54	73.8		54	45.7		54	33.1
	60	72.0		60	43.2		60	30.9
	66	71.4		66	41.3		66	29.1
						120	24	60.0
							30	49.4
							36	42.4
							42	37.4
							48	33.8
							54	31.0
							60	28.8
							66	27.1

ANCHOR QUANTITIES (PER CLIP END)

SUBSTRATE	ANCHOR	MIN. QUANTITY
CONCRETE	CONCRETE SCREW	4
MASONRY (CMU BLOCK)	CONCRETE SCREW	4
WOOD	WOOD OR TAPPING SCREW	6
1/8" THICK ASTM A-36	TAPPING SCREW	6
1/8" THICK 6063-T5	TAPPING SCREW	6
0.0346" THICK ASTM A-653, 33 KSI (STEEL STUDS)	TAPPING SCREW	6

1) SEE ANCHOR SCHEDULE FOR FASTENER REQUIREMENTS.
2) ANCHOR QUANTITIES ARE FOR EACH CLIP END.

PROJECT # 411-1205

REV	DESCRIPTION	DATE	BY
A	REVISED PER MD COMMENTS	2/25/14	RJA

PELLA CORPORATION
102 MAIN STREET
PELLA, IA 50219

TITLE: SERIES 350 4-1/2" VINYL WINDOW MULLIONS - IMPACT BLOCK/FLANGE FRAME - UNREINF. MULL - TABLE 2A/B

DATE: 03/04/13
DRAWING NO: PELL0033
SHEET: 12 OF 36
DRAWN BY: RJA
SCALE: N.T.S.
REV: A

PREPARED BY:
PTC PRODUCT DESIGN GROUP, LLC
PO BOX 520775
LONGWOOD, FLORIDA 32752
FBPE C.A. NO. 25935
Phone: 321.880.1788
Fax: 321.480.2788
Email: info@ptc-corp.com

Approved as complying with the Florida Building Code
Date April 17, 2014
NOA# 13-0610.03
Miami Dade Product Control
By: Manuel Saez

Robert J. Amoruso, P.E.
Florida P.E. No. 49752

ROBERT JAMES AMORUSO
LICENSE
No 49752
4/24/14
STATE OF FLORIDA
PROFESSIONAL ENGINEER

1" VERTICAL UNREINFORCED MULLION IN A TRANSOM OVER A MULTI-WIDE CONFIGURATION

BLOCK FRAME (CLIP V982535) AND FLANGE FRAME (CLIP V982510) INSTALLATION

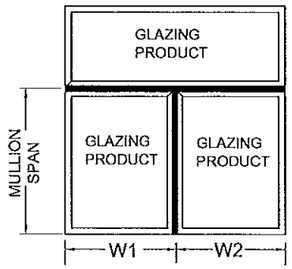

$$\text{LOAD WIDTH} = \frac{W1 + W2}{2}$$

MULLION TABLE 3.1A - WOOD SCREWS & CONCRETE SCREWS/CONCRETE
(VERTICAL 3-WAY SPAN — 1" Aluminum Reinforcing Mull)

MULL SPAN	LOAD WIDTH	DP (PSF)	MULL SPAN	LOAD WIDTH	DP (PSF)	MULL SPAN	LOAD WIDTH	DP (PSF)
24	24	75.0	48	24	75.0	72	24	75.0
	30	75.0		30	75.0		30	75.0
	36	75.0		36	75.0		36	75.0
	42	75.0		42	75.0		42	75.0
	48	75.0		48	75.0		48	75.0
	54	75.0		54	75.0		54	75.0
	60	75.0		60	75.0		60	75.0
	66	75.0		66	75.0		66	75.0
30	24	75.0	54	24	75.0	78	24	75.0
	30	75.0		30	75.0		30	75.0
	36	75.0		36	75.0		36	75.0
	42	75.0		42	75.0		42	75.0
	48	75.0		48	75.0		48	75.0
	54	75.0		54	75.0		54	75.0
	60	75.0		60	75.0		60	75.0
	66	75.0		66	75.0		66	75.0
36	24	75.0	60	24	75.0	84	24	75.0
	30	75.0		30	75.0		30	75.0
	36	75.0		36	75.0		36	75.0
	42	75.0		42	75.0		42	75.0
	48	75.0		48	75.0		48	75.0
	54	75.0		54	75.0		54	73.0
	60	75.0		60	75.0		60	69.3
	66	75.0		66	75.0		66	66.7
42	24	75.0	66	24	75.0	90	24	75.0
	30	75.0		30	75.0		30	75.0
	36	75.0		36	75.0		36	75.0
	42	75.0		42	75.0		42	75.0
	48	75.0		48	75.0		48	70.9
	54	75.0		54	75.0		54	66.0
	60	75.0		60	75.0		60	62.4
	66	75.0		66	75.0		66	59.7
						96	24	75.0
							30	75.0
							36	75.0
							42	71.3
							48	65.0
							54	60.3
							60	56.7
							66	54.0

MULLION TABLE 3.1B - CONCRETE SCREWS/MASONRY (CMU BLOCK)
(VERTICAL 3-WAY SPAN — 1" Aluminum Reinforcing Mull)

MULL SPAN	LOAD WIDTH	DP (PSF)	MULL SPAN	LOAD WIDTH	DP (PSF)	MULL SPAN	LOAD WIDTH	DP (PSF)
24	24	75.0	48	24	75.0	72	24	75.0
	30	75.0		30	75.0		30	75.0
	36	75.0		36	75.0		36	75.0
	42	75.0		42	75.0		42	72.6
	48	75.0		48	75.0		48	67.5
	54	75.0		54	75.0		54	64.0
	60	75.0		60	75.0		60	61.7
	66	75.0		66	75.0		66	60.4
30	24	75.0	54	24	75.0	78	24	75.0
	30	75.0		30	75.0		30	75.0
	36	75.0		36	75.0		36	72.0
	42	75.0		42	75.0		42	65.0
	48	75.0		48	75.0		48	60.0
	54	75.0		54	75.0		54	56.5
	60	75.0		60	75.0		60	54.0
	66	75.0		66	75.0		66	52.4
36	24	75.0	60	24	75.0	84	24	75.0
	30	75.0		30	75.0		30	75.0
	36	75.0		36	75.0		36	65.5
	42	75.0		42	75.0		42	58.8
	48	75.0		48	75.0		48	54.0
	54	75.0		54	75.0		54	50.5
	60	75.0		60	75.0		60	48.0
	66	75.0		66	75.0		66	46.2
42	24	75.0	66	24	75.0	90	24	75.0
	30	75.0		30	75.0		30	69.1
	36	75.0		36	75.0		36	60.0
	42	75.0		42	75.0		42	53.7
	48	75.0		48	75.0		48	49.1
	54	75.0		54	73.8		54	45.7
	60	75.0		60	72.0		60	43.2
	66	75.0		66	71.4		66	41.3
						96	24	75.0
							30	64.0
							36	55.4
							42	49.4
							48	45.0
							54	41.7
							60	39.3
							66	37.4

ANCHOR QUANTITIES (PER CLIP END)

SUBSTRATE	ANCHOR	MIN. QUANTITY
CONCRETE	CONCRETE SCREW	4
MASONRY (CMU BLOCK)	CONCRETE SCREW	4
WOOD	WOOD OR TAPPING SCREW	6
1/8" THICK ASTM A-36	TAPPING SCREW	6
1/8" THICK 6063-T5	TAPPING SCREW	6
0.0346" THICK ASTM A-653, 33 KSI (STEEL STUDS)	TAPPING SCREW	6

1) SEE ANCHOR SCHEDULE FOR FASTENER REQUIREMENTS.
2) ANCHOR QUANTITIES ARE FOR EACH CLIP END.

PROJECT # 411-1205

REV	DESCRIPTION	DATE	BY
A	REVISED PER MD COMMENTS	2/25/14	RJA

PELLA CORPORATION
102 MAIN STREET
PELLA, IA 50219

TITLE: SERIES 350 4-1/2" VINYL WINDOW MULLIONS - IMPACT BLOCK/FLANGE FRAME - UNREINF. MULL - TABLE 3.1A/B

DRAWN BY: RJA | DATE: 03/04/13
SCALE: N.T.S. | DRAWING NO: PELL0033
REV: A | SHEET: 13 OF 36

PREPARED BY:
PTC PRODUCT DESIGN GROUP, LLC
PO BOX 520775
LONGWOOD, FLORIDA 32752
FBPE C.A. NO. 29925
Phone: 321.860.1788
Fax: 321.867.1789
Email: info@ptc-pdg.com

Approved as complying with the Florida Building Code
Date April 11th, 2014
NOA# 13-0610.03
Miami Dade Product Control
By Manuel Perez

Robert J. Amoruso, P.E.
Florida P.E. No. 49752

ROBERT JAMES AMORUSO
LICENSE
No 49752
2/25/14
STATE OF FLORIDA
PROFESSIONAL ENGINEER

1" HORIZONTAL UNREINFORCED MULLION IN A TRANSOM OVER A MULTI-WIDE CONFIGURATION

BLOCK FRAME (CLIP V982535) AND FLANGE FRAME (CLIP V982510) INSTALLATION

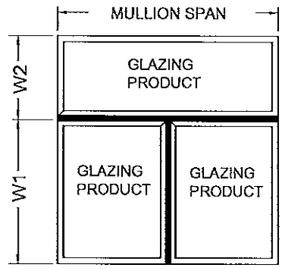

$$\text{LOAD WIDTH} = \frac{W1 + W2}{2}$$

MULLION TABLE 3.2A - WOOD SCREWS & CONCRETE SCREWS/CONCRETE
(HORIZONTAL 3-WAY SPAN — 1" ALUMINUM REINFORCING MULLION)

MULL SPAN	LOAD WIDTH	DP (PSF)	MULL SPAN	LOAD WIDTH	DP (PSF)	MULL SPAN	LOAD WIDTH	DP (PSF)
48	24	75.0	78	24	75.0	108	24	55.2
	30	75.0		30	75.0		30	52.1
	36	75.0		36	75.0		36	49.5
	42	75.0		42	75.0		42	47.4
	48	75.0		48	75.0		48	45.5
	54	75.0		54	75.0		54	47.2
	60	75.0		60	75.0		60	43.5
	66	75.0		66	71.3		66	40.6
	72	75.0		72	68.2		72	38.1
54	24	75.0	84	24	75.0	114	24	50.2
	30	75.0		30	75.0		30	47.5
	36	75.0		36	75.0		36	45.1
	42	75.0		42	75.0		42	43.2
	48	75.0		48	75.0		48	41.5
	54	75.0		54	72.1		54	39.6
	60	75.0		60	67.6		60	36.5
	66	75.0		66	64.0		66	34.0
	72	75.0		72	61.0		72	31.9
60	24	75.0	90	24	75.0	120	24	45.9
	30	75.0		30	71.3		30	43.4
	36	75.0		36	67.6		36	41.3
	42	75.0		42	64.7		42	39.6
	48	75.0		48	70.9		48	36.9
	54	75.0		54	65.6		54	33.6
	60	75.0		60	61.4		60	30.9
	66	75.0		66	58.0		66	28.8
	72	75.0		72	55.2		72	27.0
66	24	75.0	96	24	67.8			
	30	75.0		30	63.8			
	36	75.0		36	60.6			
	42	75.0		42	57.9			
	48	75.0		48	65.0			
	54	75.0		54	60.1			
	60	75.0		60	56.2			
	66	75.0		66	53.0			
	72	75.0		72	50.3			
72	24	75.0	102	24	61.0			
	30	75.0		30	57.5			
	36	75.0		36	54.6			
	42	75.0		42	52.2			
	48	75.0		48	50.2			
	54	75.0		54	55.4			
	60	75.0		60	51.8			
	66	75.0		66	48.7			
	72	75.0		72	46.0			

MULLION TABLE 3.2B - CONCRETE SCREWS/MASONRY (CMU BLOCK)
(HORIZONTAL 3-WAY SPAN — 1" ALUMINUM REINFORCING MULLION)

MULL SPAN	LOAD WIDTH	DP (PSF)	MULL SPAN	LOAD WIDTH	DP (PSF)	MULL SPAN	LOAD WIDTH	DP (PSF)
48	24	75.0	78	24	67.2	108	24	38.2
	30	75.0		30	63.1		30	36.1
	36	75.0		36	59.8		36	34.3
	42	75.0		42	64.9		42	32.8
	48	75.0		48	59.5		48	31.5
	54	75.0		54	55.3		54	35.6
	60	75.0		60	52.0		60	33.2
	66	75.0		66	49.3		66	31.2
	72	75.0		72	47.2		72	29.5
54	24	75.0	84	24	59.2	114	24	34.8
	30	75.0		30	55.6		30	32.9
	36	75.0		36	52.7		36	31.2
	42	75.0		42	58.8		42	29.9
	48	75.0		48	53.8		48	28.8
	54	75.0		54	49.9		54	27.8
	60	75.0		60	46.8		60	30.8
	66	75.0		66	44.3		66	29.0
	72	75.0		72	42.2		72	27.4
60	24	75.0	90	24	52.5	120	24	31.8
	30	75.0		30	49.4		30	30.1
	36	75.0		36	46.8		36	28.6
	42	75.0		42	44.8		42	27.4
	48	75.0		48	49.1		48	26.3
	54	75.0		54	45.4		54	25.4
	60	75.0		60	42.5		60	28.8
	66	73.8		66	40.2		66	27.0
	72	71.7		72	38.2		72	25.6
66	24	75.0	96	24	47.0			
	30	75.0		30	44.2			
	36	75.0		36	41.9			
	42	75.0		42	40.1			
	48	75.0		48	45.0			
	54	70.2		54	41.6			
	60	66.4		60	38.9			
	66	63.5		66	36.7			
	72	61.2		72	34.8			
72	24	75.0	102	24	42.2			
	30	72.3		30	39.8			
	36	75.0		36	37.8			
	42	72.3		42	36.2			
	48	66.5		48	34.8			
	54	61.9		54	38.4			
	60	58.4		60	35.8			
	66	55.6		66	33.7			
	72	53.3		72	32.0			

ANCHOR QUANTITIES (PER CLIP END)

SUBSTRATE	ANCHOR	MIN. QUANTITY
CONCRETE	CONCRETE SCREW	4
MASONRY (CMU BLOCK)	CONCRETE SCREW	4
WOOD	WOOD OR TAPPING SCREW	6
1/8" THICK ASTM A-36	TAPPING SCREW	6
1/8" THICK 6063-T5	TAPPING SCREW	6
0.0346" THICK ASTM A-653, 33 KSI (STEEL STUDS)	TAPPING SCREW	6

1) SEE ANCHOR SCHEDULE FOR FASTENER REQUIREMENTS.
2) ANCHOR QUANTITIES ARE FOR EACH CLIP END.

PROJECT # 411-1205

REV	DESCRIPTION	DATE	BY
A	REVISED PER MD COMMENTS	2/25/14	RJA

PELLA CORPORATION
102 MAIN STREET
PELLA, IA 50219

TITLE: SERIES 350 4-1/2" VINYL WINDOW MULLIONS - IMPACT BLOCK/FLANGE FRAME - UNREINF. MULL - TABLE 3.2A/B

DATE: 03/04/13
DRAWING NO: PELL0033
SHEET: 14 OF 36
DRAWN BY: RJA
SCALE: N.T.S.
REV: A

PREPARED BY:
PTC PRODUCT DESIGN GROUP, LLC
PO BOX 520775
LONGWOOD, FLORIDA 32752
FDPE C.A. NO. 29935
Phone: 321.690.1788
Fax: 321.690.1789
Email: info@ptc-pdg.com

Approved as complying with the Florida Building Code
Date APRIL 17, 2014
NOA# 13-0610.03
Miami Dade Product Control
By Manuel Perez

Robert J. Amoruso, P.E.
Florida P.E. No. 49752

ROBERT JAMES AMORUSO
LICENSE
No 49752
STATE OF FLORIDA
PROFESSIONAL ENGINEER
2/25/14

1" VERTICAL UNREINFORCED MULLION IN A 4-WAY MULTI-WIDE, MULTI-HIGH CONFIGURATION

BLOCK FRAME (CLIP V982535) AND FLANGE FRAME (CLIP V982510) INSTALLATION

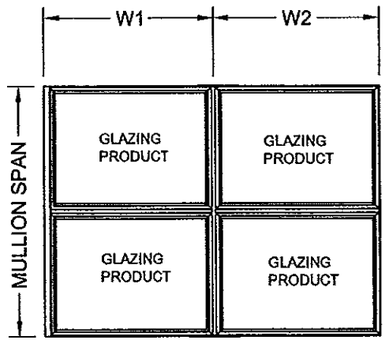

$$\text{LOAD WIDTH} = \frac{W1 + W2}{2}$$

MULLION TABLE 4.1A - WOOD SCREWS & CONCRETE SCREWS/CONCRETE
(VERTICAL 4-WAY SPAN — 1" Aluminum Reinforcing Mull)

MULL SPAN	LOAD WIDTH	DP (PSF)	MULL SPAN	LOAD WIDTH	DP (PSF)	MULL SPAN	LOAD WIDTH	DP (PSF)
36	24	75.0	66	24	75.0	96	24	75.0
	30	75.0		30	75.0		30	75.0
	36	75.0		36	75.0		36	75.0
	42	75.0		42	75.0		42	71.3
	48	75.0		48	75.0		48	65.0
	54	75.0		54	75.0		54	60.3
	60	75.0		60	75.0		60	56.7
	66	75.0		66	75.0		66	53.5
	72	75.0		72	75.0		72	49.4
42	24	75.0	72	24	75.0	102	24	75.0
	30	75.0		30	75.0		30	75.0
	36	75.0		36	75.0		36	74.3
	42	75.0		42	75.0		42	66.0
	48	75.0		48	75.0		48	59.1
	54	75.0		54	75.0		54	53.2
	60	75.0		60	75.0		60	48.4
	66	75.0		66	75.0		66	44.4
	72	75.0		72	75.0		72	41.0
48	24	75.0	78	24	75.0	108	24	75.0
	30	75.0		30	75.0		30	75.0
	36	75.0		36	75.0		36	64.4
	42	75.0		42	75.0		42	55.9
	48	75.0		48	75.0		48	49.5
	54	75.0		54	75.0		54	44.5
	60	75.0		60	75.0		60	40.5
	66	75.0		66	75.0		66	37.2
	72	75.0		72	74.3		72	34.4
54	24	75.0	84	24	75.0	114	24	75.0
	30	75.0		30	75.0		30	64.8
	36	75.0		36	75.0		36	54.6
	42	75.0		42	75.0		42	47.3
	48	75.0		48	75.0		48	41.9
	54	75.0		54	73.0		54	37.7
	60	75.0		60	69.3		60	34.3
	66	75.0		66	66.7		66	31.5
	72	75.0		72	65.0		72	29.1
60	24	75.0	90	24	75.0	120	24	68.5
	30	75.0		30	75.0		30	55.4
	36	75.0		36	75.0		36	46.6
	42	75.0		42	75.0		42	40.4
	48	75.0		48	70.9		48	35.7
	54	75.0		54	66.0		54	32.1
	60	75.0		60	62.4		60	29.2
	66	75.0		66	59.7		66	26.8
	72	75.0		72	57.8		72	24.8

MULLION TABLE 4.1B - CONCRETE SCREWS/MASONRY (CMU BLOCK)
(VERTICAL 4-WAY SPAN — 1" Aluminum Reinforcing Mull)

MULL SPAN	LOAD WIDTH	DP (PSF)	MULL SPAN	LOAD WIDTH	DP (PSF)	MULL SPAN	LOAD WIDTH	DP (PSF)
36	24	75.0	66	24	75.0	96	24	75.0
	30	75.0		30	75.0		30	64.0
	36	75.0		36	75.0		36	55.4
	42	75.0		42	75.0		42	49.4
	48	75.0		48	75.0		48	45.0
	54	75.0		54	73.8		54	41.7
	60	75.0		60	72.0		60	39.3
	66	75.0		66	71.4		66	37.4
	72	75.0		72	71.4		72	36.0
42	24	75.0	72	24	75.0	102	24	72.0
	30	75.0		30	75.0		30	59.6
	36	75.0		36	75.0		36	51.4
	42	75.0		42	72.6		42	45.7
	48	75.0		48	67.5		48	41.5
	54	75.0		54	64.0		54	38.4
	60	75.0		60	61.7		60	36.0
	66	75.0		66	60.4		66	34.2
	72	75.0		72	60.0		72	32.7
48	24	75.0	78	24	75.0	108	24	67.5
	30	75.0		30	75.0		30	55.7
	36	75.0		36	72.0		36	48.0
	42	75.0		42	65.0		42	42.6
	48	75.0		48	60.0		48	38.6
	54	75.0		54	56.5		54	35.6
	60	75.0		60	54.0		60	33.2
	66	75.0		66	52.4		66	31.4
	72	75.0		72	51.4		72	30.0
54	24	75.0	84	24	75.0	114	24	63.5
	30	75.0		30	75.0		30	52.4
	36	75.0		36	65.5		36	45.0
	42	75.0		42	58.8		42	39.8
	48	75.0		48	54.0		48	36.0
	54	75.0		54	50.5		54	33.1
	60	75.0		60	48.0		60	30.9
	66	75.0		66	46.2		66	29.1
	72	75.0		72	45.0		72	27.7
60	24	75.0	90	24	75.0	120	24	60.0
	30	75.0		30	69.1		30	49.4
	36	75.0		36	60.0		36	42.4
	42	75.0		42	53.7		42	37.4
	48	75.0		48	49.1		48	33.8
	54	75.0		54	45.7		54	31.0
	60	75.0		60	43.2		60	28.8
	66	75.0		66	41.3		66	26.8
	72	75.0		72	40.0		72	24.8

ANCHOR QUANTITIES (PER CLIP END)

SUBSTRATE	ANCHOR	MIN. QUANTITY
CONCRETE	CONCRETE SCREW	4
MASONRY (CMU BLOCK)	CONCRETE SCREW	4
WOOD	WOOD OR TAPPING SCREW	6
1/8" THICK ASTM A-36	TAPPING SCREW	6
1/8" THICK 6063-T5	TAPPING SCREW	6
0.0346" THICK ASTM A-653, 33 KSI (STEEL STUDS)	TAPPING SCREW	6

1) SEE ANCHOR SCHEDULE FOR FASTENER REQUIREMENTS.
2) ANCHOR QUANTITIES ARE FOR EACH CLIP END.

PROJECT # 411-1205

REV	DESCRIPTION	DATE	BY
A	REVISED PER MD COMMENTS	2/25/14	RJA

PELLA CORPORATION
102 MAIN STREET
PELLA, IA 50219

TITLE: SERIES 350 4-1/2" VINYL WINDOW MULLIONS - IMPACT BLOCK/FLANGE FRAME - UNREINF. MULL - TABLE 4.1A/B

DATE: 03/04/13
DRAWN BY: RJA
DRAWING NO: PELL0033
SCALE: N.T.S.
SHEET: 15 OF 36
REV: A

PREPARED BY:
PTC PRODUCT DESIGN GROUP, LLC
PO BOX 520775
LONGWOOD, FLORIDA 32752
FBPE C.A. NO. 28605
Phone: 321.690.1788
Fax: 321.690.1789
Email: info@ptc-corp.com

Approved as complying with the Florida Building Code
Date: APR 17 2014
NOA# 13-0616.03
Miami Dade Product Control
By: Manuel Sere

Robert J. Amoruso, P.E.
Florida P.E. No. 49752

ROBERT JAMES AMORUSO
LICENSE
No 49752
2/25/14
STATE OF FLORIDA
PROFESSIONAL ENGINEER

1" HORIZONTAL UNREINFORCED MULLION IN A 4-WAY MULTI-WIDE, MULTI-HIGH CONFIGURATION

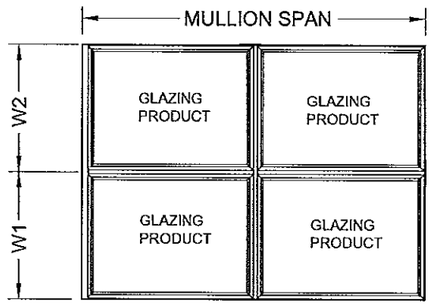

$$\text{LOAD WIDTH} = \frac{W1 + W2}{2}$$

BLOCK FRAME (CLIP V982535) AND FLANGE FRAME (CLIP V982510) INSTALLATION

MULLION TABLE 4.2A - WOOD SCREWS & CONCRETE SCREWS/CONCRETE
(HORIZONTAL 4-WAY SPAN — 1" Aluminum Reinforcing Mull)

MULL SPAN	LOAD WIDTH	DP (PSF)	MULL SPAN	LOAD WIDTH	DP (PSF)	MULL SPAN	LOAD WIDTH	DP (PSF)
36	24	75.0	66	24	75.0	96	24	75.0
	30	75.0		30	75.0		30	75.0
	36	75.0		36	75.0		36	75.0
	42	75.0		42	75.0		42	73.0
	48	75.0		48	75.0		48	66.5
	54	75.0		54	75.0		54	61.7
	60	75.0		60	75.0		60	55.1
42	24	75.0	72	24	75.0	102	24	75.0
	30	75.0		30	75.0		30	75.0
	36	75.0		36	75.0		36	75.0
	42	75.0		42	75.0		42	67.6
	48	75.0		48	75.0		48	59.9
	54	75.0		54	75.0		54	52.5
	60	75.0		60	75.0		60	46.5
48	24	75.0	78	24	75.0	108	24	75.0
	30	75.0		30	75.0		30	75.0
	36	75.0		36	75.0		36	67.1
	42	75.0		42	75.0		42	58.3
	48	75.0		48	75.0		48	50.7
	54	75.0		54	75.0		54	44.5
	60	75.0		60	75.0		60	39.6
54	24	75.0	84	24	75.0	114	24	70.4
	30	75.0		30	75.0		30	63.6
	36	75.0		36	75.0		36	56.4
	42	75.0		42	75.0		42	49.5
	48	75.0		48	75.0		48	43.3
	54	75.0		54	74.7		54	38.1
	60	75.0		60	70.9		60	33.9
60	24	75.0	90	24	75.0	120	24	58.3
	30	75.0		30	75.0		30	53.3
	36	75.0		36	75.0		36	67.1
	42	75.0		42	75.0		42	42.2
	48	75.0		48	72.5		48	37.2
	54	75.0		54	67.6		54	32.8
	60	75.0		60	63.8		60	29.2

MULLION TABLE 4.2B - CONCRETE SCREWS/MASONRY (CMU BLOCK)
(HORIZONTAL 4-WAY SPAN — 1" Aluminum Reinforcing Mull)

MULL SPAN	LOAD WIDTH	DP (PSF)	MULL SPAN	LOAD WIDTH	DP (PSF)	MULL SPAN	LOAD WIDTH	DP (PSF)
36	24	75.0	66	24	75.0	96	24	75.0
	30	75.0		30	75.0		30	64.0
	36	75.0		36	75.0		36	55.4
	42	75.0		42	75.0		42	49.4
	48	75.0		48	75.0		48	45.0
	54	75.0		54	73.8		54	41.7
	60	75.0		60	72.0		60	39.3
42	24	75.0	72	24	75.0	102	24	72.0
	30	75.0		30	75.0		30	59.6
	36	75.0		36	75.0		36	51.4
	42	75.0		42	72.6		42	45.7
	48	75.0		48	67.5		48	41.5
	54	75.0		54	64.0		54	38.4
	60	75.0		60	61.7		60	36.0
48	24	75.0	78	24	75.0	108	24	67.5
	30	75.0		30	75.0		30	55.7
	36	75.0		36	72.0		36	48.0
	42	75.0		42	65.0		42	42.6
	48	75.0		48	60.0		48	38.6
	54	75.0		54	56.5		54	35.6
	60	75.0		60	54.0		60	33.2
54	24	75.0	84	24	75.0	114	24	63.5
	30	75.0		30	75.0		30	52.4
	36	75.0		36	65.5		36	45.0
	42	75.0		42	58.8		42	39.8
	48	75.0		48	54.0		48	36.0
	54	75.0		54	50.5		54	33.1
	60	75.0		60	48.0		60	30.9
60	24	75.0	90	24	75.0	120	24	58.3
	30	75.0		30	69.1		30	49.4
	36	75.0		36	60.0		36	48.0
	42	75.0		42	53.7		42	37.4
	48	75.0		48	49.1		48	33.8
	54	75.0		54	45.7		54	31.0
	60	75.0		60	43.2		60	28.8

ANCHOR QUANTITIES (PER CLIP END)

SUBSTRATE	ANCHOR	MIN. QUANTITY
CONCRETE	CONCRETE SCREW	4
MASONRY (CMU BLOCK)	CONCRETE SCREW	4
WOOD	WOOD OR TAPPING SCREW	6
1/8" THICK ASTM A-36	TAPPING SCREW	6
1/8" THICK 6063-T5	TAPPING SCREW	6
0.0346" THICK ASTM A-653, 33 KSI (STEEL STUDS)	TAPPING SCREW	6

1) SEE ANCHOR SCHEDULE FOR FASTENER REQUIREMENTS.
2) ANCHOR QUANTITIES ARE FOR EACH CLIP END.

PROJECT # 411-1205

REV	DESCRIPTION	DATE	BY
A	REVISED PER MD COMMENTS	2/25/14	RJA

PELLA CORPORATION
102 MAIN STREET
PELLA, IA 50219

TITLE: SERIES 350 4-1/2" VINYL WINDOW MULLIONS - IMPACT BLOCK/FLANGE FRAME - UNREINF. MULL - TABLE 4.2A/B

DATE: 03/04/13
DRAWING NO: PELL0033
DRAWN BY: RJA
SCALE: N.T.S.
SHEET: 16 OF 36
REV: A

PREPARED BY:
PTC PRODUCT DESIGN GROUP, LLC
PO BOX 520775
LONGWOOD, FLORIDA 32752
FBPE C.A. NO. 25925
Phone: 321.860.1788
Fax: 321.800.2789
Email: info@ptc-corp.com

Approved as complying with the Florida Building Code
Date April 17, 2014
NOA# 13-0610.03
Miami Dade Product Control
By Manuel Sera

Robert J. Amoruso, P.E.
Florida P.E. No. 49752

ROBERT JAMES AMORUSO
LICENSE
No 49752
STATE OF FLORIDA
PROFESSIONAL ENGINEER
2/25/14

1" VERTICAL REINFORCED MULLION MULTI-WIDE CONFIGURATION

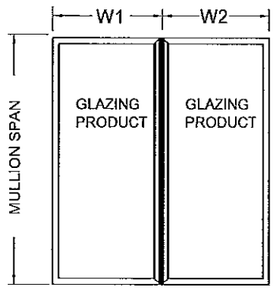

$$\text{LOAD WIDTH} = \frac{W1 + W2}{2}$$

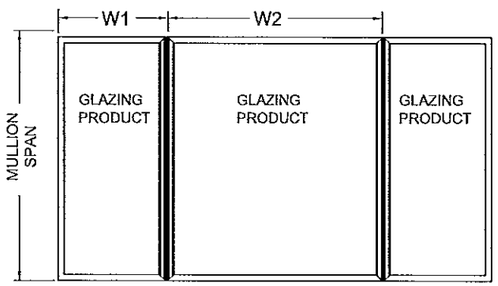

BLOCK FRAME (CLIP V982535) AND FLANGE FRAME (CLIP V982510) INSTALLATION

MULLION TABLE 5A - WOOD SCREWS & CONCRETE SCREWS/CONCRETE
(VERTICAL SPAN — 1" Aluminum Reinforcing Mull w/Reinforcement)

MULL SPAN	LOAD WIDTH	DP (PSF)	MULL SPAN	LOAD WIDTH	DP (PSF)	MULL SPAN	LOAD WIDTH	DP (PSF)
24	24	75.0	60	24	75.0	96	24	75.0
	30	75.0		30	75.0		30	75.0
	36	75.0		36	75.0		36	75.0
	42	75.0		42	75.0		42	71.3
	48	75.0		48	75.0		48	65.0
	54	75.0		54	75.0		54	60.3
	60	75.0		60	75.0		60	56.7
	66	75.0		66	75.0		66	54.0
	72	75.0		72	75.0		72	52.0
30	24	75.0	66	24	75.0	102	24	75.0
	30	75.0		30	75.0		30	75.0
	36	75.0		36	75.0		36	74.3
	42	75.0		42	75.0		42	66.0
	48	75.0		48	75.0		48	60.0
	54	75.0		54	75.0		54	55.5
	60	75.0		60	75.0		60	52.0
	66	75.0		66	75.0		66	49.3
	72	75.0		72	75.0		72	47.3
36	24	75.0	72	24	75.0	108	24	75.0
	30	75.0		30	75.0		30	75.0
	36	75.0		36	75.0		36	69.3
	42	75.0		42	75.0		42	61.5
	48	75.0		48	75.0		48	55.7
	54	75.0		54	75.0		54	51.4
	60	75.0		60	75.0		60	48.0
	66	75.0		66	75.0		66	45.4
	72	75.0		72	75.0		72	43.3
42	24	75.0	78	24	75.0	114	24	75.0
	30	75.0		30	75.0		30	75.0
	36	75.0		36	75.0		36	65.0
	42	75.0		42	75.0		42	57.5
	48	75.0		48	75.0		48	52.0
	54	75.0		54	75.0		54	47.8
	60	75.0		60	75.0		60	44.6
	66	75.0		66	75.0		66	42.0
	72	75.0		72	74.3		72	40.0
48	24	75.0	84	24	75.0	120	24	75.0
	30	75.0		30	75.0		30	71.3
	36	75.0		36	75.0		36	61.2
	42	75.0		42	75.0		42	54.0
	48	75.0		48	75.0		48	48.8
	54	75.0		54	73.0		54	44.7
	60	75.0		60	69.3		60	41.6
	66	75.0		66	66.7		66	39.1
	72	75.0		72	65.0		72	37.1
54	24	75.0	90	24	75.0			
	30	75.0		30	75.0			
	36	75.0		36	75.0			
	42	75.0		42	75.0			
	48	75.0		48	70.9			
	54	75.0		54	66.0			
	60	75.0		60	62.4			
	66	75.0		66	59.7			
	72	75.0		72	57.8			

MULLION TABLE 5B - CONCRETE SCREWS/MASONRY (CMU BLOCK)
(VERTICAL SPAN — 1" Aluminum Reinforcing Mull w/Reinforcement)

MULL SPAN	LOAD WIDTH	DP (PSF)	MULL SPAN	LOAD WIDTH	DP (PSF)	MULL SPAN	LOAD WIDTH	DP (PSF)
24	24	75.0	60	24	75.0	96	24	75.0
	30	75.0		30	75.0		30	64.0
	36	75.0		36	75.0		36	55.4
	42	75.0		42	75.0		42	49.4
	48	75.0		48	75.0		48	45.0
	54	75.0		54	75.0		54	41.7
	60	75.0		60	75.0		60	39.3
	66	75.0		66	75.0		66	37.4
	72	75.0		72	75.0		72	36.0
30	24	75.0	66	24	75.0	102	24	72.0
	30	75.0		30	75.0		30	59.6
	36	75.0		36	75.0		36	51.4
	42	75.0		42	75.0		42	45.7
	48	75.0		48	75.0		48	41.5
	54	75.0		54	73.8		54	38.4
	60	75.0		60	72.0		60	36.0
	66	75.0		66	71.4		66	34.2
	72	75.0		72	71.4		72	32.7
36	24	75.0	72	24	75.0	108	24	67.5
	30	75.0		30	75.0		30	55.7
	36	75.0		36	75.0		36	48.0
	42	75.0		42	72.6		42	42.6
	48	75.0		48	67.5		48	38.6
	54	75.0		54	64.0		54	35.6
	60	75.0		60	61.7		60	33.2
	66	75.0		66	60.4		66	31.4
	72	75.0		72	60.0		72	30.0
42	24	75.0	78	24	75.0	114	24	63.5
	30	75.0		30	75.0		30	52.4
	36	75.0		36	72.0		36	45.0
	42	75.0		42	65.0		42	39.8
	48	75.0		48	60.0		48	36.0
	54	75.0		54	56.5		54	33.1
	60	75.0		60	54.0		60	30.9
	66	75.0		66	52.4		66	29.1
	72	75.0		72	51.4		72	27.7
48	24	75.0	84	24	75.0	120	24	60.0
	30	75.0		30	75.0		30	49.4
	36	75.0		36	65.5		36	42.4
	42	75.0		42	58.8		42	37.4
	48	75.0		48	54.0		48	33.8
	54	75.0		54	50.5		54	31.0
	60	75.0		60	48.0		60	28.8
	66	75.0		66	46.2		66	27.1
	72	75.0		72	45.0		72	25.7
54	24	75.0	90	24	75.0			
	30	75.0		30	69.1			
	36	75.0		36	60.0			
	42	75.0		42	53.7			
	48	75.0		48	49.1			
	54	75.0		54	45.7			
	60	75.0		60	43.2			
	66	75.0		66	41.3			
	72	75.0		72	40.0			

ANCHOR QUANTITIES (PER CLIP END)

SUBSTRATE	ANCHOR	MIN. QUANTITY
CONCRETE	CONCRETE SCREW	4
MASONRY (CMU BLOCK)	CONCRETE SCREW	4
WOOD	WOOD OR TAPPING SCREW	6
1/8" THICK ASTM A-36	TAPPING SCREW	6
1/8" THICK 6063-T5	TAPPING SCREW	6
0.0346" THICK ASTM A-653, 33 KSI (STEEL STUDS)	TAPPING SCREW	6

1) SEE ANCHOR SCHEDULE FOR FASTENER REQUIREMENTS.
2) ANCHOR QUANTITIES ARE FOR EACH CLIP END.

PROJECT # 411-1205

REV	DESCRIPTION	DATE	BY
A	REVISED PER MD COMMENTS	2/25/14	RJA

PELLA CORPORATION
102 MAIN STREET
PELLA, IA 50219

TITLE: SERIES 350 4-1/2" VINYL WINDOW MULLIONS - IMPACT BLOCK/FLANGE FRAME - REINF. MULL - TABLE 5A/B

DRAWN BY: RJA
DATE: 03/04/13
SCALE: N.T.S.
DRAWING NO: PELL0033
REV: A
SHEET: 17 OF 36

PREPARED BY:
PTC PRODUCT DESIGN GROUP, LLC
PO BOX 520775
LONGWOOD, FLORIDA 32752
FBPE C.A. NO. 25935
Phone: 321.850.1788
Fax: 321.480.2798
Email: info@ptc-corp.com

Approved as complying with the Florida Building Code
Date April 11, 2014
NOAR 13-0610.03
Miami Dade Product Control
By

Robert J. Amoruso, P.E.
Florida P.E. No. 49752

ROBERT JAMES AMORUSO
LICENSE
No 49752
2/25/14
STATE OF FLORIDA
PROFESSIONAL ENGINEER

1" HORIZONTAL REINFORCED MULLION
MULTI-HIGH CONFIGURATION

BLOCK FRAME (CLIP V982535) AND FLANGE FRAME (CLIP V982510) INSTALLATION

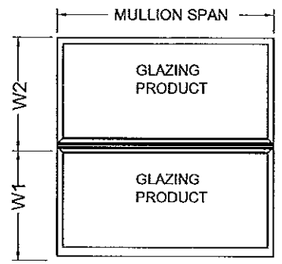

$$\text{LOAD WIDTH} = \frac{W1 + W2}{2}$$

MULLION TABLE 6A - WOOD SCREWS & CONCRETE SCREWS/CONCRETE
(HORIZONTAL SPAN — 1" Aluminum Reinforcing Mull w/Reinforcement)

MULL SPAN	LOAD WIDTH	DP (PSF)	MULL SPAN	LOAD WIDTH	DP (PSF)	MULL SPAN	LOAD WIDTH	DP (PSF)
48	24	75.0	72	24	75.0	96	24	75.0
	30	75.0		30	75.0		30	75.0
	36	75.0		36	75.0		36	75.0
	42	75.0		42	75.0		42	73.0
	48	75.0		48	75.0		48	66.5
	54	75.0		54	75.0		54	61.7
	60	75.0		60	75.0		60	58.0
	66	75.0		66	75.0		66	55.3
54	24	75.0	78	24	75.0	102	24	75.0
	30	75.0		30	75.0		30	75.0
	36	75.0		36	75.0		36	75.0
	42	75.0		42	75.0		42	67.6
	48	75.0		48	75.0		48	61.4
	54	75.0		54	75.0		54	56.7
	60	75.0		60	75.0		60	53.2
	66	75.0		66	75.0		66	50.5
60	24	75.0	84	24	75.0	108	24	75.0
	30	75.0		30	75.0		30	75.0
	36	75.0		36	75.0		36	70.9
	42	75.0		42	75.0		42	62.9
	48	75.0		48	75.0		48	57.0
	54	75.0		54	74.7		54	52.5
	60	75.0		60	70.9		60	49.1
	66	75.0		66	68.3		66	46.4
66	24	75.0	90	24	75.0	114	24	75.0
	30	75.0		30	75.0		30	75.0
	36	75.0		36	75.0		36	66.5
	42	75.0		42	75.0		42	58.8
	48	75.0		48	72.5		48	53.2
	54	75.0		54	67.6		54	48.9
	60	75.0		60	63.8		60	45.6
	66	75.0		66	61.1		66	43.0
						120	24	75.0
							30	73.0
							36	62.6
							42	55.3
							48	49.9
							54	45.8
							60	42.6
							66	40.0

MULLION TABLE 6B - CONCRETE SCREWS/MASONRY (CMU BLOCK)
(HORIZONTAL SPAN — 1" Aluminum Reinforcing Mull w/Reinforcement)

MULL SPAN	LOAD WIDTH	DP (PSF)	MULL SPAN	LOAD WIDTH	DP (PSF)	MULL SPAN	LOAD WIDTH	DP (PSF)
48	24	75.0	72	24	75.0	96	24	75.0
	30	75.0		30	75.0		30	64.0
	36	75.0		36	75.0		36	55.4
	42	75.0		42	72.6		42	49.4
	48	75.0		48	67.5		48	45.0
	54	75.0		54	64.0		54	41.7
	60	75.0		60	61.7		60	39.3
	66	75.0		66	60.4		66	37.4
54	24	75.0	78	24	75.0	102	24	72.0
	30	75.0		30	75.0		30	59.6
	36	75.0		36	72.0		36	51.4
	42	75.0		42	65.0		42	45.7
	48	75.0		48	60.0		48	41.5
	54	75.0		54	56.5		54	38.4
	60	75.0		60	54.0		60	36.0
	66	75.0		66	52.4		66	34.2
60	24	75.0	84	24	75.0	108	24	67.5
	30	75.0		30	75.0		30	55.7
	36	75.0		36	65.5		36	48.0
	42	75.0		42	58.8		42	42.6
	48	75.0		48	54.0		48	38.6
	54	75.0		54	50.5		54	35.6
	60	75.0		60	48.0		60	33.2
	66	75.0		66	46.2		66	31.4
66	24	75.0	90	24	75.0	114	24	63.5
	30	75.0		30	69.1		30	52.4
	36	75.0		36	60.0		36	45.0
	42	75.0		42	53.7		42	39.8
	48	75.0		48	49.1		48	36.0
	54	73.8		54	45.7		54	33.1
	60	72.0		60	43.2		60	30.9
	66	71.4		66	41.3		66	29.1
						120	24	60.0
							30	49.4
							36	42.4
							42	37.4
							48	33.8
							54	31.0
							60	28.8
							66	27.1

ANCHOR QUANTITIES (PER CLIP END)

SUBSTRATE	ANCHOR	MIN. QUANTITY
CONCRETE	CONCRETE SCREW	4
MASONRY (CMU BLOCK)	CONCRETE SCREW	4
WOOD	WOOD OR TAPPING SCREW	6
1/8" THICK ASTM A-36	TAPPING SCREW	6
1/8" THICK 6063-T5	TAPPING SCREW	6
0.0346" THICK ASTM A-653, 33 KSI (STEEL STUDS)	TAPPING SCREW	6

1) SEE ANCHOR SCHEDULE FOR FASTENER REQUIREMENTS.
2) ANCHOR QUANTITIES ARE FOR EACH CLIP END.

PROJECT # 411-1205

REV	DESCRIPTION	DATE	BY
A	REVISED PER MD COMMENTS	2/25/14	RJA

PELLA CORPORATION
102 MAIN STREET
PELLA, IA 50219

TITLE: SERIES 350 4-1/2" VINYL WINDOW MULLIONS - IMPACT BLOCK/FLANGE FRAME - REINF. MULL - TABLE 6A/B

DRAWN BY: RJA
DATE: 03/04/13
SCALE: N.T.S.
DRAWING NO: PELL0033
REV: A
SHEET: 18 OF 36

PREPARED BY:
PTC PRODUCT DESIGN GROUP, LLC
PO BOX 520775
LONGWOOD, FLORIDA 32752
FBPE C.A. NO. 25953
Phone: 321.800.1798
Fax: 321.800.1799
Email: info@ptc-corp.com

Approved as complying with the Florida Building Code
Date APRIL 11, 2014
NOA# 13-0610.03
Miami Dade Product Control
By Manuel Perez

Robert J. Amoruso, P.E.
Florida P.E. No. 49752

ROBERT JAMES AMORUSO
LICENSE
No 49752
STATE OF FLORIDA
PROFESSIONAL ENGINEER
2/25/14

1" VERTICAL REINFORCED MULLION IN A TRANSOM OVER A MULTI-WIDE CONFIGURATION

BLOCK FRAME (CLIP V982535) AND FLANGE FRAME (CLIP V982510) INSTALLATION

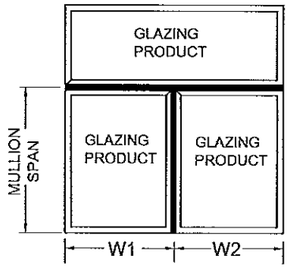

$$\text{LOAD WIDTH} = \frac{W1 + W2}{2}$$

MULLION TABLE 7.1A - WOOD SCREWS & CONCRETE SCREWS/CONCRETE
(VERTICAL 3-WAY SPAN — 1" Aluminum Reinforcing Mull w/Reinforcement)

MULL SPAN	LOAD WIDTH	DP (PSF)	MULL SPAN	LOAD WIDTH	DP (PSF)	MULL SPAN	LOAD WIDTH	DP (PSF)
24	24	75.0	48	24	75.0	72	24	75.0
	30	75.0		30	75.0		30	75.0
	36	75.0		36	75.0		36	75.0
	42	75.0		42	75.0		42	75.0
	48	75.0		48	75.0		48	75.0
	54	75.0		54	75.0		54	75.0
	60	75.0		60	75.0		60	75.0
	66	75.0		66	75.0		66	75.0
30	24	75.0	54	24	75.0	78	24	75.0
	30	75.0		30	75.0		30	75.0
	36	75.0		36	75.0		36	75.0
	42	75.0		42	75.0		42	75.0
	48	75.0		48	75.0		48	75.0
	54	75.0		54	75.0		54	75.0
	60	75.0		60	75.0		60	75.0
	66	75.0		66	75.0		66	75.0
36	24	75.0	60	24	75.0	84	24	75.0
	30	75.0		30	75.0		30	75.0
	36	75.0		36	75.0		36	75.0
	42	75.0		42	75.0		42	75.0
	48	75.0		48	75.0		48	75.0
	54	75.0		54	75.0		54	73.0
	60	75.0		60	75.0		60	69.3
	66	75.0		66	75.0		66	66.7
42	24	75.0	66	24	75.0	90	24	75.0
	30	75.0		30	75.0		30	75.0
	36	75.0		36	75.0		36	75.0
	42	75.0		42	75.0		42	75.0
	48	75.0		48	75.0		48	70.9
	54	75.0		54	75.0		54	66.0
	60	75.0		60	75.0		60	62.4
	66	75.0		66	75.0		66	59.7
						96	24	75.0
							30	75.0
							36	75.0
							42	71.3
							48	65.0
							54	60.3
							60	56.7
							66	54.0

MULLION TABLE 7.1B - CONCRETE SCREWS/MASONRY (CMU BLOCK)
(VERTICAL 3-WAY SPAN — 1" Aluminum Reinforcing Mull w/Reinforcement)

MULL SPAN	LOAD WIDTH	DP (PSF)	MULL SPAN	LOAD WIDTH	DP (PSF)	MULL SPAN	LOAD WIDTH	DP (PSF)
24	24	75.0	48	24	75.0	72	24	75.0
	30	75.0		30	75.0		30	75.0
	36	75.0		36	75.0		36	75.0
	42	75.0		42	75.0		42	72.6
	48	75.0		48	75.0		48	67.5
	54	75.0		54	75.0		54	64.0
	60	75.0		60	75.0		60	61.7
	66	75.0		66	75.0		66	60.4
30	24	75.0	54	24	75.0	78	24	75.0
	30	75.0		30	75.0		30	75.0
	36	75.0		36	75.0		36	72.0
	42	75.0		42	75.0		42	65.0
	48	75.0		48	75.0		48	60.0
	54	75.0		54	75.0		54	56.5
	60	75.0		60	75.0		60	54.0
	66	75.0		66	75.0		66	52.4
36	24	75.0	60	24	75.0	84	24	75.0
	30	75.0		30	75.0		30	75.0
	36	75.0		36	75.0		36	65.5
	42	75.0		42	75.0		42	58.8
	48	75.0		48	75.0		48	54.0
	54	75.0		54	75.0		54	50.5
	60	75.0		60	75.0		60	48.0
	66	75.0		66	75.0		66	46.2
42	24	75.0	66	24	75.0	90	24	75.0
	30	75.0		30	75.0		30	69.1
	36	75.0		36	75.0		36	60.0
	42	75.0		42	75.0		42	53.7
	48	75.0		48	75.0		48	49.1
	54	75.0		54	73.8		54	45.7
	60	75.0		60	72.0		60	43.2
	66	75.0		66	71.4		66	41.3
						96	24	75.0
							30	64.0
							36	55.4
							42	49.4
							48	45.0
							54	41.7
							60	39.3
							66	37.4

ANCHOR QUANTITIES (PER CLIP END)

SUBSTRATE	ANCHOR	MIN. QUANTITY
CONCRETE	CONCRETE SCREW	4
MASONRY (CMU BLOCK)	CONCRETE SCREW	4
WOOD	WOOD OR TAPPING SCREW	6
1/8" THICK ASTM A-36	TAPPING SCREW	6
1/8" THICK 6063-T5	TAPPING SCREW	6
0.0346" THICK ASTM A-653, 33 KSI (STEEL STUDS)	TAPPING SCREW	6

1) SEE ANCHOR SCHEDULE FOR FASTENER REQUIREMENTS.
2) ANCHOR QUANTITIES ARE FOR EACH CLIP END.

PROJECT # 411-1205

REV	DESCRIPTION	DATE	BY
A	REVISED PER MD COMMENTS	2/25/14	RJA

PELLA CORPORATION
102 MAIN STREET
PELLA, IA 50219

TITLE: SERIES 350 4-1/2" VINYL WINDOW MULLIONS - IMPACT BLOCK/FLANGE FRAME - REINF. MULL - TABLE 7.1A/B

DATE: 03/04/13
DRAWING NO: PELL0033
DRAWN BY: RJA
SCALE: N.T.S.
SHEET: 19 OF 36
REV: A

PREPARED BY:
PTG PRODUCT DESIGN GROUP, LLC
PO BOX 320775
LONGWOOD, FLORIDA 32752
FBPE C.A. NO. 25905
Phone: 321.860.1788
Fax: 321.860.1789
Email: info@ptg-dc-corp.com

Approved as complying with the Florida Building Code
Date Apr 17, 2014
NOA# 13-0610.03
Miami Dade Product Control
By

Robert J. Amoruso, P.E.
Florida P.E. No. 49752

ROBERT JAMES AMORUSO
LICENSE
No 49752
STATE OF FLORIDA
PROFESSIONAL ENGINEER

1" HORIZONTAL REINFORCED MULLION IN A TRANSOM OVER A MULTI-WIDE CONFIGURATION

BLOCK FRAME (CLIP V982535) AND FLANGE FRAME (CLIP V982510) INSTALLATION

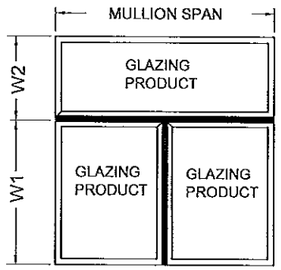

$$\text{LOAD WIDTH} = \frac{W1 + W2}{2}$$

MULLION TABLE 7.2A - WOOD SCREWS & CONCRETE SCREWS/CONCRETE
(HORIZONTAL 3-WAY SPAN — 1" ALUMINUM REINFORCING MULLION W/REINFORCEMENT)

MULL SPAN	LOAD WIDTH	DP (PSF)	MULL SPAN	LOAD WIDTH	DP (PSF)	MULL SPAN	LOAD WIDTH	DP (PSF)
48	24	75.0	78	24	75.0	108	24	55.2
	30	75.0		30	75.0		30	52.1
	36	75.0		36	75.0		36	49.5
	42	75.0		42	75.0		42	47.4
	48	75.0		48	75.0		48	45.5
	54	75.0		54	75.0		54	51.4
	60	75.0		60	75.0		60	47.9
	66	75.0		66	71.3		66	45.1
	72	75.0		72	68.2		72	42.7
54	24	75.0	84	24	75.0	114	24	50.2
	30	75.0		30	75.0		30	47.5
	36	75.0		36	75.0		36	45.1
	42	75.0		42	75.0		42	43.2
	48	75.0		48	75.0		48	41.5
	54	75.0		54	72.1		54	40.1
	60	75.0		60	67.6		60	44.6
	66	75.0		66	64.0		66	41.9
	72	75.0		72	61.0		72	39.6
60	24	75.0	90	24	75.0	120	24	45.9
	30	75.0		30	71.3		30	43.4
	36	75.0		36	67.6		36	41.3
	42	75.0		42	64.7		42	39.6
	48	75.0		48	70.9		48	38.0
	54	75.0		54	65.6		54	36.8
	60	75.0		60	61.4		60	41.6
	66	75.0		66	58.0		66	39.1
	72	75.0		72	55.2		72	36.9
66	24	75.0	96	24	67.8			
	30	75.0		30	63.8			
	36	75.0		36	60.6			
	42	75.0		42	57.9			
	48	75.0		48	65.0			
	54	75.0		54	60.1			
	60	75.0		60	56.2			
	66	75.0		66	53.0			
	72	75.0		72	50.3			
72	24	75.0	102	24	61.0			
	30	75.0		30	57.5			
	36	75.0		36	54.6			
	42	75.0		42	52.2			
	48	75.0		48	50.2			
	54	75.0		54	55.4			
	60	75.0		60	51.8			
	66	75.0		66	48.7			
	72	75.0		72	46.2			

MULLION TABLE 7.2B - CONCRETE SCREWS/MASONRY (CMU BLOCK)
(HORIZONTAL 3-WAY SPAN — 1" ALUMINUM REINFORCING MULLION W/REINFORCEMENT)

MULL SPAN	LOAD WIDTH	DP (PSF)	MULL SPAN	LOAD WIDTH	DP (PSF)	MULL SPAN	LOAD WIDTH	DP (PSF)
48	24	75.0	78	24	67.2	108	24	38.2
	30	75.0		30	63.1		30	36.1
	36	75.0		36	59.8		36	34.3
	42	75.0		42	64.9		42	32.8
	48	75.0		48	59.5		48	31.5
	54	75.0		54	55.3		54	35.6
	60	75.0		60	52.0		60	33.2
	66	75.0		66	49.3		66	31.2
	72	75.0		72	47.2		72	29.5
54	24	75.0	84	24	59.2	114	24	34.8
	30	75.0		30	55.6		30	32.9
	36	75.0		36	52.7		36	31.2
	42	75.0		42	58.8		42	29.9
	48	75.0		48	53.8		48	28.8
	54	75.0		54	49.9		54	27.8
	60	75.0		60	46.8		60	30.8
	66	75.0		66	44.3		66	29.0
	72	75.0		72	42.2		72	27.4
60	24	75.0	90	24	52.5	120	24	31.8
	30	75.0		30	49.4		30	30.1
	36	75.0		36	46.8		36	28.6
	42	75.0		42	44.8		42	27.4
	48	75.0		48	49.1		48	26.3
	54	75.0		54	45.4		54	25.4
	60	75.0		60	42.5		60	28.8
	66	73.8		66	40.2		66	27.0
	72	71.7		72	38.2		72	25.6
66	24	75.0	96	24	47.0			
	30	75.0		30	44.2			
	36	75.0		36	41.9			
	42	75.0		42	40.1			
	48	75.0		48	45.0			
	54	70.2		54	41.6			
	60	66.4		60	38.9			
	66	63.5		66	36.7			
	72	61.2		72	34.8			
72	24	75.0	102	24	42.2			
	30	72.3		30	39.8			
	36	75.0		36	37.8			
	42	72.3		42	36.2			
	48	66.5		48	34.8			
	54	61.9		54	38.4			
	60	58.4		60	35.8			
	66	55.6		66	33.7			
	72	53.3		72	32.0			

ANCHOR QUANTITIES (PER CLIP END)

SUBSTRATE	ANCHOR	MIN. QUANTITY
CONCRETE	CONCRETE SCREW	4
MASONRY (CMU BLOCK)	CONCRETE SCREW	4
WOOD	WOOD OR TAPPING SCREW	6
1/8" THICK ASTM A-36	TAPPING SCREW	6
1/8" THICK 6063-T5	TAPPING SCREW	6
0.0346" THICK ASTM A-653, 33 KSI (STEEL STUDS)	TAPPING SCREW	6

1) SEE ANCHOR SCHEDULE FOR FASTENER REQUIREMENTS.
2) ANCHOR QUANTITIES ARE FOR EACH CLIP END.

PROJECT # 411-1205

REV	DESCRIPTION	DATE	BY
A	REVISED PER MD COMMENTS	2/25/14	RJA

PELLA CORPORATION
102 MAIN STREET
PELLA, IA 50219

TITLE: SERIES 350 4-1/2" VINYL WINDOW MULLIONS - IMPACT BLOCK/FLANGE FRAME - REINF. MULL - TABLE 7.2A/B

DATE: 03/04/13
DRAWN BY: RJA
DRAWING NO: PELL0033
SCALE: N.T.S.
SHEET: 20 OF 36
REV: A

PREPARED BY:
PTC PRODUCT DESIGN GROUP, LLC
PO BOX 520775
LONGWOOD, FLORIDA 32752
FBPE C.A. NO. 25935
Phone: 321.890.1788
Fax: 321.890.1789
Email: info@ptc-corp.com

Approved as complying with the Florida Building Code
Date APRIL 17, 2014
NOA# 13-0610.03
Miami Dade Product Control
By Manuel Sosa

Robert J. Amoruso, P.E.
Florida P.E. No. 49752

ROBERT JAMES AMORUSO
LICENSE
No 49752
STATE OF FLORIDA
PROFESSIONAL ENGINEER

1" VERTICAL REINFORCED MULLION IN A 4-WAY MULTI-WIDE, MULTI-HIGH CONFIGURATION

BLOCK FRAME (CLIP V982535) AND FLANGE FRAME (CLIP V982510) INSTALLATION

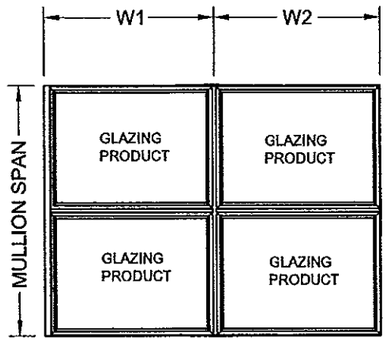

LOAD WIDTH = $\frac{W1 + W2}{2}$

MULLION TABLE 8.1A - WOOD SCREWS & CONCRETE SCREWS/CONCRETE
(VERTICAL 4-WAY SPAN — 1" Aluminum Reinforcing Mull w/Reinforcement)

MULL SPAN	LOAD WIDTH	DP (PSF)	MULL SPAN	LOAD WIDTH	DP (PSF)	MULL SPAN	LOAD WIDTH	DP (PSF)
36	24	75.0	66	24	75.0	96	24	75.0
	30	75.0		30	75.0		30	75.0
	36	75.0		36	75.0		36	75.0
	42	75.0		42	75.0		42	71.3
	48	75.0		48	75.0		48	65.0
	54	75.0		54	75.0		54	60.3
	60	75.0		60	75.0		60	56.7
	66	75.0		66	75.0		66	54.0
	72	75.0		72	75.0		72	52.0
42	24	75.0	72	24	75.0	102	24	75.0
	30	75.0		30	75.0		30	75.0
	36	75.0		36	75.0		36	74.3
	42	75.0		42	75.0		42	66.0
	48	75.0		48	75.0		48	60.0
	54	75.0		54	75.0		54	55.5
	60	75.0		60	75.0		60	52.0
	66	75.0		66	75.0		66	49.3
	72	75.0		72	75.0		72	47.3
48	24	75.0	78	24	75.0	108	24	75.0
	30	75.0		30	75.0		30	75.0
	36	75.0		36	75.0		36	69.3
	42	75.0		42	75.0		42	61.5
	48	75.0		48	75.0		48	55.7
	54	75.0		54	75.0		54	51.4
	60	75.0		60	75.0		60	48.0
	66	75.0		66	75.0		66	45.4
	72	75.0		72	74.3		72	43.3
54	24	75.0	84	24	75.0	114	24	75.0
	30	75.0		30	75.0		30	75.0
	36	75.0		36	75.0		36	65.0
	42	75.0		42	75.0		42	57.5
	48	75.0		48	75.0		48	52.0
	54	75.0		54	73.0		54	47.8
	60	75.0		60	69.3		60	44.6
	66	75.0		66	66.7		66	42.0
	72	75.0		72	65.0		72	40.0
60	24	75.0	90	24	75.0	120	24	75.0
	30	75.0		30	75.0		30	71.3
	36	75.0		36	75.0		36	61.2
	42	75.0		42	75.0		42	54.0
	48	75.0		48	70.9		48	48.8
	54	75.0		54	66.0		54	44.7
	60	75.0		60	62.4		60	41.6
	66	75.0		66	59.7		66	39.1
	72	75.0		72	57.8		72	37.1

MULLION TABLE 8.1B - CONCRETE SCREWS/MASONRY (CMU BLOCK)
(VERTICAL 4-WAY SPAN — 1" Aluminum Reinforcing Mull w/Reinforcement)

MULL SPAN	LOAD WIDTH	DP (PSF)	MULL SPAN	LOAD WIDTH	DP (PSF)	MULL SPAN	LOAD WIDTH	DP (PSF)
36	24	75.0	66	24	75.0	96	24	75.0
	30	75.0		30	75.0		30	64.0
	36	75.0		36	75.0		36	55.4
	42	75.0		42	75.0		42	49.4
	48	75.0		48	75.0		48	45.0
	54	75.0		54	73.8		54	41.7
	60	75.0		60	72.0		60	39.3
	66	75.0		66	71.4		66	37.4
	72	75.0		72	71.4		72	36.0
42	24	75.0	72	24	75.0	102	24	72.0
	30	75.0		30	75.0		30	59.6
	36	75.0		36	75.0		36	51.4
	42	75.0		42	72.6		42	45.7
	48	75.0		48	67.5		48	41.5
	54	75.0		54	64.0		54	38.4
	60	75.0		60	61.7		60	36.0
	66	75.0		66	60.4		66	34.2
	72	75.0		72	60.0		72	32.7
48	24	75.0	78	24	75.0	108	24	67.5
	30	75.0		30	75.0		30	55.7
	36	75.0		36	72.0		36	48.0
	42	75.0		42	65.0		42	42.6
	48	75.0		48	60.0		48	38.6
	54	75.0		54	56.5		54	35.6
	60	75.0		60	54.0		60	33.2
	66	75.0		66	52.4		66	31.4
	72	75.0		72	51.4		72	30.0
54	24	75.0	84	24	75.0	114	24	63.5
	30	75.0		30	75.0		30	52.4
	36	75.0		36	65.5		36	45.0
	42	75.0		42	58.8		42	39.8
	48	75.0		48	54.0		48	36.0
	54	75.0		54	50.5		54	33.1
	60	75.0		60	48.0		60	30.9
	66	75.0		66	46.2		66	29.1
	72	75.0		72	45.0		72	27.7
60	24	75.0	90	24	75.0	120	24	60.0
	30	75.0		30	69.1		30	49.4
	36	75.0		36	60.0		36	42.4
	42	75.0		42	53.7		42	37.4
	48	75.0		48	49.1		48	33.8
	54	75.0		54	45.7		54	31.0
	60	75.0		60	43.2		60	28.8
	66	75.0		66	41.3		66	27.1
	72	75.0		72	40.0		72	25.7

ANCHOR QUANTITIES (PER CLIP END)

SUBSTRATE	ANCHOR	MIN. QUANTITY
CONCRETE	CONCRETE SCREW	4
MASONRY (CMU BLOCK)	CONCRETE SCREW	4
WOOD	WOOD OR TAPPING SCREW	6
1/8" THICK ASTM A-36	TAPPING SCREW	6
1/8" THICK 6063-T5	TAPPING SCREW	6
0.0346" THICK ASTM A-653, 33 KSI (STEEL STUDS)	TAPPING SCREW	6

1) SEE ANCHOR SCHEDULE FOR FASTENER REQUIREMENTS.
2) ANCHOR QUANTITIES ARE FOR EACH CLIP END.

PROJECT # 411-1205

REV	DESCRIPTION	DATE	BY
A	REVISED PER MD COMMENTS	2/25/14	RJA

PELLA CORPORATION
102 MAIN STREET
PELLA, IA 50219

TITLE: SERIES 350 4-1/2" VINYL WINDOW MULLIONS - IMPACT BLOCK/FLANGE FRAME - REINF. MULL - TABLE 8.1A/B

DATE: 03/04/13
DRAWN BY: RJA
DRAWING NO: PELL0033
SCALE: N.T.S.
SHEET: 21 OF 36
REV: A

PREPARED BY:
PTC PRODUCT DESIGN GROUP, LLC
PO BOX 520775
LONGWOOD, FLORIDA 32752
FBPE C.A. NO. 28305
Phone: 321.690.1788
Fax: 321.690.1789
Email: info@ptc-pcp.com

Approved as complying with the Florida Building Code
Date APR 17 2014
NOA# 13-0610.03
Miami Dade Product Control
By Manuel Cruz

Robert J. Amoruso, P.E.
Florida P.E. No. 49752

ROBERT JAMES AMORUSO
LICENSE
No 49752
2/25/14
STATE OF FLORIDA
PROFESSIONAL ENGINEER

1" HORIZONTAL REINFORCED MULLION IN A 4-WAY MULTI-WIDE, MULTI-HIGH CONFIGURATION

BLOCK FRAME (CLIP V982535) AND FLANGE FRAME (CLIP V982510) INSTALLATION

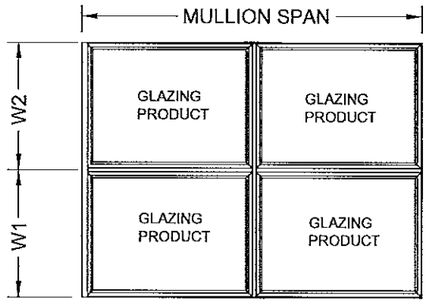

$$\text{LOAD WIDTH} = \frac{W1 + W2}{2}$$

MULLION TABLE 8.2A - WOOD SCREWS & CONCRETE SCREWS/CONCRETE
(HORIZONTAL 4-WAY SPAN --- 1" Aluminum Reinforcing Mull w/Reinforcement)

MULL SPAN	LOAD WIDTH	DP (PSF)	MULL SPAN	LOAD WIDTH	DP (PSF)	MULL SPAN	LOAD WIDTH	DP (PSF)
36	24	75.0	66	24	75.0	96	24	75.0
	30	75.0		30	75.0		30	75.0
	36	75.0		36	75.0		36	75.0
	42	75.0		42	75.0		42	71.3
	48	75.0		48	75.0		48	65.0
	54	75.0		54	75.0		54	60.3
	60	75.0		60	75.0		60	56.7
42	24	75.0	72	24	75.0	102	24	75.0
	30	75.0		30	75.0		30	75.0
	36	75.0		36	75.0		36	74.3
	42	75.0		42	75.0		42	66.0
	48	75.0		48	75.0		48	60.0
	54	75.0		54	75.0		54	55.5
	60	75.0		60	75.0		60	52.0
48	24	75.0	78	24	75.0	108	24	75.0
	30	75.0		30	75.0		30	75.0
	36	75.0		36	75.0		36	69.3
	42	75.0		42	75.0		42	61.5
	48	75.0		48	75.0		48	55.7
	54	75.0		54	75.0		54	51.4
	60	75.0		60	75.0		60	48.0
54	24	75.0	84	24	75.0	114	24	75.0
	30	75.0		30	75.0		30	75.0
	36	75.0		36	75.0		36	65.0
	42	75.0		42	75.0		42	57.5
	48	75.0		48	75.0		48	52.0
	54	75.0		54	73.0		54	47.8
	60	75.0		60	69.3		60	44.6
60	24	75.0	90	24	75.0	120	24	75.0
	30	75.0		30	75.0		30	71.3
	36	75.0		36	75.0		36	69.3
	42	75.0		42	75.0		42	54.0
	48	75.0		48	70.9		48	48.8
	54	75.0		54	66.0		54	44.7
	60	75.0		60	62.4		60	41.6

MULLION TABLE 8.2B - CONCRETE SCREWS/MASONRY (CMU BLOCK)
(HORIZONTAL 4-WAY SPAN --- 1" Aluminum Reinforcing Mull w/Reinforcement)

MULL SPAN	LOAD WIDTH	DP (PSF)	MULL SPAN	LOAD WIDTH	DP (PSF)	MULL SPAN	LOAD WIDTH	DP (PSF)
36	24	75.0	66	24	75.0	96	24	75.0
	30	75.0		30	75.0		30	64.0
	36	75.0		36	75.0		36	55.4
	42	75.0		42	75.0		42	49.4
	48	75.0		48	75.0		48	45.0
	54	75.0		54	73.8		54	41.7
	60	75.0		60	72.0		60	39.3
42	24	75.0	72	24	75.0	102	24	72.0
	30	75.0		30	75.0		30	59.6
	36	75.0		36	75.0		36	51.4
	42	75.0		42	72.6		42	45.7
	48	75.0		48	67.5		48	41.5
	54	75.0		54	64.0		54	38.4
	60	75.0		60	61.7		60	36.0
48	24	75.0	78	24	75.0	108	24	67.5
	30	75.0		30	75.0		30	55.7
	36	75.0		36	72.0		36	48.0
	42	75.0		42	65.0		42	42.6
	48	75.0		48	60.0		48	38.6
	54	75.0		54	56.5		54	35.6
	60	75.0		60	54.0		60	33.2
54	24	75.0	84	24	75.0	114	24	63.5
	30	75.0		30	75.0		30	52.4
	36	75.0		36	65.5		36	45.0
	42	75.0		42	58.8		42	39.8
	48	75.0		48	54.0		48	36.0
	54	75.0		54	50.5		54	33.1
	60	75.0		60	48.0		60	30.9
60	24	75.0	90	24	75.0	120	24	60.0
	30	75.0		30	69.1		30	49.4
	36	75.0		36	60.0		36	48.0
	42	75.0		42	53.7		42	37.4
	48	75.0		48	49.1		48	33.8
	54	75.0		54	45.7		54	31.0
	60	75.0		60	43.2		60	28.8

ANCHOR QUANTITIES (PER CLIP END)

SUBSTRATE	ANCHOR	MIN. QUANTITY
CONCRETE	CONCRETE SCREW	4
MASONRY (CMU BLOCK)	CONCRETE SCREW	4
WOOD	WOOD OR TAPPING SCREW	6
1/8" THICK ASTM A-36	TAPPING SCREW	6
1/8" THICK 6063-T5	TAPPING SCREW	6
0.0346" THICK ASTM A-653, 33 KSI (STEEL STUDS)	TAPPING SCREW	6

1) SEE ANCHOR SCHEDULE FOR FASTENER REQUIREMENTS.
2) ANCHOR QUANTITIES ARE FOR EACH CLIP END.

PROJECT # 411-1205

REV	DESCRIPTION	DATE	BY
A	REVISED PER MD COMMENTS	2/25/14	RJA

PELLA CORPORATION
102 MAIN STREET
PELLA, IA 50219

TITLE: SERIES 350 4-1/2" VINYL WINDOW MULLIONS - IMPACT BLOCK/FLANGE FRAME - REINF. MULL - TABLE 8.2A/B

DATE: 03/04/13
DRAWN BY: RJA
DRAWING NO: PELL0033
SCALE: N.T.S.
SHEET: 22 OF 36
REV: A

PREPARED BY:
PTC PRODUCT DESIGN GROUP, LLC
PO BOX 520775
LONGWOOD, FLORIDA 32752
FBPE C.A. NO. 25625
Phone: 321.860.1798
Fax: 321.860.1799
Email: info@ptc-corp.com

Approved as complying with the Florida Building Code
Date APR 11 2014
NOA# 13-0610.03
Miami Dade Product Control
By: Manuel Perez

Robert J. Amoruso, P.E.
Florida P.E. No. 49752

ROBERT JAMES AMORUSO
LICENSE
No 49752
STATE OF FLORIDA
PROFESSIONAL ENGINEER

1" VERTICAL UNREINF. & REINF. MULLION MULTI-WIDE CONFIGURATION

FIN FRAME (CLIP V984356/V984357) INSTALLATION

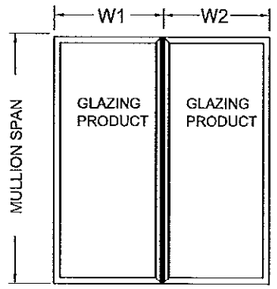

$$\text{LOAD WIDTH} = \frac{W1 + W2}{2}$$

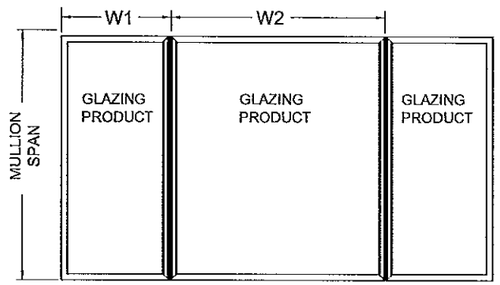

TABLE 1A ANCHOR QUANTITIES (PER CLIP END)		
SUBSTRATE	ANCHOR	MIN. QUANTITY
WOOD	WOOD OR TAPPING SCREW	4
1/8" THICK ASTM A-36	TAPPING SCREW	3
1/8" THICK 6063-T5	TAPPING SCREW	7
0.0346" THICK ASTM A-653, 33 KSI (STEEL STUDS)	TAPPING SCREW	9
1) SEE ANCHOR SCHEDULE FOR FASTENER REQUIREMENTS. 2) ANCHOR QUANTITIES ARE FOR EACH CLIP END.		

TABLE 1B ANCHOR QUANTITIES (PER CLIP END)		
SUBSTRATE	ANCHOR	MIN. QUANTITY
WOOD	WOOD OR TAPPING SCREW	5
1/8" THICK ASTM A-36	TAPPING SCREW	4
1/8" THICK 6063-T5	TAPPING SCREW	9
0.0346" THICK ASTM A-653, 33 KSI (STEEL STUDS)	TAPPING SCREW	NOT RECOMMENDED
1) SEE ANCHOR SCHEDULE FOR FASTENER REQUIREMENTS. 2) ANCHOR QUANTITIES ARE FOR EACH CLIP END.		

MULLION TABLE 9A
(VERTICAL SPAN — 1" Aluminum Reinforcing Mull)

MULL SPAN	LOAD WIDTH	DP (PSF)	MULL SPAN	LOAD WIDTH	DP (PSF)	MULL SPAN	LOAD WIDTH	DP (PSF)
24	24	75.0	60	24	75.0	96	24	75.0
	30	75.0		30	75.0		30	75.0
	36	75.0		36	75.0		36	75.0
	42	75.0		42	75.0		42	75.0
	48	75.0		48	75.0		48	71.1
	54	75.0		54	75.0		54	65.0
	60	75.0		60	75.0		60	60.4
	66	75.0		66	75.0		66	57.0
	72	75.0		72	75.0		72	54.3
30	24	75.0	66	24	75.0	102	24	75.0
	30	75.0		30	75.0		30	75.0
	36	75.0		36	75.0		36	75.0
	42	75.0		42	75.0		42	65.6
	48	75.0		48	75.0		48	58.6
	54	75.0		54	75.0		54	53.4
	60	75.0		60	75.0		60	49.4
	66	75.0		66	75.0		66	46.4
	72	75.0		72	75.0		72	44.0
36	24	75.0	72	24	75.0	108	24	75.0
	30	75.0		30	75.0		30	74.4
	36	75.0		36	75.0		36	62.9
	42	75.0		42	75.0		42	54.8
	48	75.0		48	75.0		48	48.9
	54	75.0		54	75.0		54	44.4
	60	75.0		60	75.0		60	41.0
	66	75.0		66	75.0		66	38.3
	72	75.0		72	75.0		72	36.2
42	24	75.0	78	24	75.0	114	24	75.0
	30	75.0		30	75.0		30	63.1
	36	75.0		36	75.0		36	53.2
	42	75.0		42	75.0		42	46.3
	48	75.0		48	75.0		48	41.2
	54	75.0		54	75.0		54	37.4
	60	75.0		60	75.0		60	34.4
	66	75.0		66	75.0		66	32.0
	72	75.0		72	75.0		72	30.2
48	24	75.0	84	24	75.0	120	24	66.8
	30	75.0		30	75.0		30	53.9
	36	75.0		36	75.0		36	45.5
	42	75.0		42	75.0		42	39.5
	48	75.0		48	75.0		48	35.1
	54	75.0		54	75.0		54	31.7
	60	75.0		60	75.0		60	29.1
	66	75.0		66	75.0		66	27.1
	72	75.0		72	75.0		72	25.5
54	24	75.0	90	24	75.0			
	30	75.0		30	75.0			
	36	75.0		36	75.0			
	42	75.0		42	75.0			
	48	75.0		48	75.0			
	54	75.0		54	75.0			
	60	75.0		60	75.0			
	66	75.0		66	71.2			
	72	75.0		72	68.3			

MULLION TABLE 9B
(VERTICAL SPAN — 1" Aluminum Reinforcing Mull w/Reinforcement)

MULL SPAN	LOAD WIDTH	DP (PSF)	MULL SPAN	LOAD WIDTH	DP (PSF)	MULL SPAN	LOAD WIDTH	DP (PSF)
24	24	75.0	60	24	75.0	96	24	75.0
	30	75.0		30	75.0		30	75.0
	36	75.0		36	75.0		36	75.0
	42	75.0		42	75.0		42	75.0
	48	75.0		48	75.0		48	75.0
	54	75.0		54	75.0		54	75.0
	60	75.0		60	75.0		60	75.0
	66	75.0		66	75.0		66	75.00
	72	75.0		72	75.0		72	75.0
30	24	75.0	66	24	75.0	102	24	75.0
	30	75.0		30	75.0		30	75.0
	36	75.0		36	75.0		36	75.0
	42	75.0		42	75.0		42	75.0
	48	75.0		48	75.0		48	75.0
	54	75.0		54	75.0		54	75.0
	60	75.0		60	75.0		60	75.0
	66	75.0		66	75.0		66	71.4
	72	75.0		72	75.0		72	67.8
36	24	75.0	72	24	75.0	108	24	75.0
	30	75.0		30	75.0		30	75.0
	36	75.0		36	75.0		36	75.0
	42	75.0		42	75.0		42	75.0
	48	75.0		48	75.0		48	75.0
	54	75.0		54	75.0		54	68.4
	60	75.0		60	75.0		60	63.1
	66	75.0		66	75.0		66	59.0
	72	75.0		72	75.0		72	55.7
42	24	75.0	78	24	75.0	114	24	75.0
	30	75.0		30	75.0		30	75.0
	36	75.0		36	75.0		36	75.0
	42	75.0		42	75.0		42	71.3
	48	75.0		48	75.0		48	63.4
	54	75.0		54	75.0		54	57.5
	60	75.0		60	75.0		60	52.9
	66	75.0		66	75.0		66	49.3
	72	75.0		72	75.0		72	46.5
48	24	75.0	84	24	75.0	120	24	75.0
	30	75.0		30	75.0		30	75.0
	36	75.0		36	75.0		36	70.0
	42	75.0		42	75.0		42	60.8
	48	75.0		48	75.0		48	54.0
	54	75.0		54	75.0		54	48.9
	60	75.0		60	75.0		60	44.9
	66	75.0		66	75.0		66	41.7
	72	75.0		72	75.0		72	39.2
54	24	75.0	90	24	75.0			
	30	75.0		30	75.0			
	36	75.0		36	75.0			
	42	75.0		42	75.0			
	48	75.0		48	75.0			
	54	75.0		54	75.0			
	60	75.0		60	75.0			
	66	75.0		66	75.0			
	72	75.0		72	75.0			

PROJECT # 411-1205

REV	DESCRIPTION	DATE	BY
A	REVISED PER MD COMMENTS	2/25/14	RJA

PELLA CORPORATION
102 MAIN STREET
PELLA, IA 50219

TITLE: SERIES 350 4-1/2" VINYL WINDOW MULLIONS - IMPACT
FIN FRAME - UNREINF. & REINF. MULL - TABLE 9A/B

DATE: 03/04/13
DRAWING NO: PELL0033
SHEET: 23 OF 36
DRAWN BY: RJA
SCALE: N.T.S.
REV: A

PREPARED BY:
PTC PRODUCT DESIGN GROUP, LLC
PO BOX 520775
LONGWOOD, FLORIDA 32752
FDPC CA. NO. 26935
Phone: 321.690.1788
Fax: 321.690.1789
Email: info@ptc-corp.com

Approved as complying with the Florida Building Code
Date 4/11/2014
NOA# 13-0610.03
Miami Dade Product Control
By Manuel Perez

Robert J. Amoruso, P.E.
Florida P.E. No. 49752

ROBERT JAMES AMORUSO
LICENSE
No 49752
STATE OF FLORIDA
PROFESSIONAL ENGINEER

1" HORIZONTAL UNREINF. & REINF. MULLION MULTI-HIGH CONFIGURATION

FIN FRAME (CLIP V984356/V984357) INSTALLATION

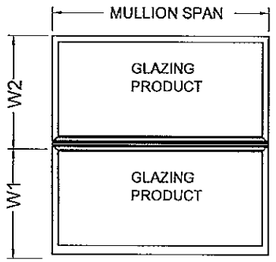

$$\text{LOAD WIDTH} = \frac{W1 + W2}{2}$$

MULLION TABLE 10A
(HORIZONTAL SPAN — 1" Aluminum Reinforcing Mull)

MULL SPAN	LOAD WIDTH	DP (PSF)	MULL SPAN	LOAD WIDTH	DP (PSF)	MULL SPAN	LOAD WIDTH	DP (PSF)
48	24	75.0	72	24	75.0	96	24	75.0
	30	75.0		30	75.0		30	75.0
	36	75.0		36	75.0		36	75.0
	42	75.0		42	75.0		42	75.0
	48	75.0		48	75.0		48	71.1
	54	75.0		54	75.0		54	65.0
	60	75.0		60	75.0		60	60.4
	66	75.0		66	75.0		66	56.9
54	24	75.0	78	24	75.0	102	24	75.0
	30	75.0		30	75.0		30	75.0
	36	75.0		36	75.0		36	75.0
	42	75.0		42	75.0		42	65.5
	48	75.0		48	75.0		48	58.6
	54	75.0		54	75.0		54	53.4
	60	75.0		60	75.0		60	49.4
	66	75.0		66	75.0		66	46.4
60	24	75.0	84	24	75.0	108	24	75.0
	30	75.0		30	75.0		30	74.4
	36	75.0		36	75.0		36	62.9
	42	75.0		42	75.0		42	54.8
	48	75.0		48	75.0		48	48.9
	54	75.0		54	75.0		54	44.4
	60	75.0		60	75.0		60	41.0
	66	75.0		66	75.0		66	38.3
66	24	75.0	90	24	75.0	114	24	75.0
	30	75.0		30	75.0		30	63.1
	36	75.0		36	75.0		36	53.2
	42	75.0		42	75.0		42	46.3
	48	75.0		48	75.0		48	41.2
	54	75.0		54	75.0		54	37.4
	60	75.0		60	75.0		60	34.4
	66	75.0		66	71.1		66	32.0
						120	24	66.8
							30	53.9
							36	45.4
							42	39.5
							48	35.1
							54	31.7
							60	29.1
							66	27.1

MULLION TABLE 10B
(HORIZONTAL SPAN — 1" Aluminum Reinforcing Mull w/Reinforcement)

MULL SPAN	LOAD WIDTH	DP (PSF)	MULL SPAN	LOAD WIDTH	DP (PSF)	MULL SPAN	LOAD WIDTH	DP (PSF)
48	24	75.0	72	24	75.0	96	24	75.0
	30	75.0		30	75.0		30	75.0
	36	75.0		36	75.0		36	75.0
	42	75.0		42	75.0		42	75.0
	48	75.0		48	75.0		48	75.0
	54	75.0		54	75.0		54	75.0
	60	75.0		60	75.0		60	75.0
	66	75.0		66	75.0		66	75.0
54	24	75.0	78	24	75.0	102	24	75.0
	30	75.0		30	75.0		30	75.0
	36	75.0		36	75.0		36	75.0
	42	75.0		42	75.0		42	75.0
	48	75.0		48	75.0		48	75.0
	54	75.0		54	75.0		54	75.0
	60	75.0		60	75.0		60	75.0
	66	75.0		66	75.0		66	71.4
60	24	75.0	84	24	75.0	108	24	75.0
	30	75.0		30	75.0		30	75.0
	36	75.0		36	75.0		36	75.0
	42	75.0		42	75.0		42	75.0
	48	75.0		48	75.0		48	75.0
	54	75.0		54	75.0		54	68.4
	60	75.0		60	75.0		60	63.1
	66	75.0		66	75.0		66	59.0
66	24	75.0	90	24	75.0	114	24	75.0
	30	75.0		30	75.0		30	75.0
	36	75.0		36	75.0		36	75.0
	42	75.0		42	75.0		42	71.3
	48	75.0		48	75.0		48	63.4
	54	75.0		54	75.0		54	57.5
	60	75.0		60	75.0		60	52.9
	66	75.0		66	75.0		66	49.3
						120	24	75.0
							30	75.0
							36	70.0
							42	60.8
							48	54.0
							54	48.9
							60	44.9
							66	41.7

TABLE 2A ANCHOR QUANTITIES (PER CLIP END)

SUBSTRATE	ANCHOR	MIN. QUANTITY
WOOD	WOOD OR TAPPING SCREW	4
1/8" THICK ASTM A-36	TAPPING SCREW	3
1/8" THICK 6063-T5	TAPPING SCREW	7
0.0346" THICK ASTM A-653, 33 KSI (STEEL STUDS)	TAPPING SCREW	9

1) SEE ANCHOR SCHEDULE FOR FASTENER REQUIREMENTS.
2) ANCHOR QUANTITIES ARE FOR EACH CLIP END.

TABLE 2B ANCHOR QUANTITIES (PER CLIP END)

SUBSTRATE	ANCHOR	MIN. QUANTITY
WOOD	WOOD OR TAPPING SCREW	5
1/8" THICK ASTM A-36	TAPPING SCREW	4
1/8" THICK 6063-T5	TAPPING SCREW	9
0.0346" THICK ASTM A-653, 33 KSI (STEEL STUDS)	TAPPING SCREW	NOT RECOMMENDED

1) SEE ANCHOR SCHEDULE FOR FASTENER REQUIREMENTS.
2) ANCHOR QUANTITIES ARE FOR EACH CLIP END.

PROJECT # 411-1205

REV	DESCRIPTION	DATE	BY
A	REVISED PER MD COMMENTS	2/25/14	RJA

PELLA CORPORATION
102 MAIN STREET
PELLA, IA 50219

TITLE: SERIES 350 4-1/2" VINYL WINDOW MULLIONS - IMPACT
FIN FRAME - UNREINF. & REINF. MULL - TABLE 10A/B

DATE: 03/04/13
DRAWING NO: PELL0033
DRAWN BY: RJA
SCALE: N.T.S.
SHEET: 24 OF 36
REV: A

PREPARED BY:
PTC PRODUCT DESIGN GROUP, LLC
PO BOX 320775
LONGWOOD, FLORIDA 32752
FBPE C.A. NO. 25905
Phone: 321.800.1788
Fax: 321.690.1788
Email: info@ptc-corp.com

Approved as complying with the Florida Building Code
Date April 17, 2014
NOA# 13-0616.03
Miami Dade Product Control
By Manuel Barrera

Robert J. Amoruso, P.E.
Florida P.E. No. 49752

ROBERT JAMES AMORUSO
LICENSE
No 49752
STATE OF FLORIDA
PROFESSIONAL ENGINEER
2/25/14

1" VERTICAL UNREINF. & REINF. MULLION IN A TRANSOM OVER A MULTI-WIDE CONFIGURATION

FIN FRAME (CLIP V984356/V984357) INSTALLATION

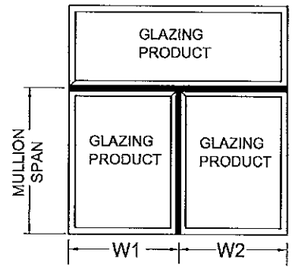

$$\text{LOAD WIDTH} = \frac{W1 + W2}{2}$$

MULLION TABLE 11.1A

(VERTICAL SPAN — 1" Aluminum Reinforcing Mull)

MULL SPAN	LOAD WIDTH	DP (PSF)	MULL SPAN	LOAD WIDTH	DP (PSF)	MULL SPAN	LOAD WIDTH	DP (PSF)
24	24	75.0	48	24	75.0	72	24	75.0
	30	75.0		30	75.0		30	75.0
	36	75.0		36	75.0		36	75.0
	42	75.0		42	75.0		42	75.0
	48	75.0		48	75.0		48	75.0
	54	75.0		54	75.0		54	75.0
	60	75.0		60	75.0		60	75.0
	66	75.0		66	75.0		66	75.0
30	24	75.0	54	24	75.0	78	24	75.0
	30	75.0		30	75.0		30	75.0
	36	75.0		36	75.0		36	75.0
	42	75.0		42	75.0		42	75.0
	48	75.0		48	75.0		48	75.0
	54	75.0		54	75.0		54	75.0
	60	75.0		60	75.0		60	75.0
	66	75.0		66	75.0		66	75.0
36	24	75.0	60	24	75.0	84	24	75.0
	30	75.0		30	75.0		30	75.0
	36	75.0		36	75.0		36	75.0
	42	75.0		42	75.0		42	75.0
	48	75.0		48	75.0		48	75.0
	54	75.0		54	75.0		54	75.0
	60	75.0		60	75.0		60	75.0
	66	75.0		66	75.0		66	75.0
42	24	75.0	66	24	75.0	90	24	75.0
	30	75.0		30	75.0		30	75.0
	36	75.0		36	75.0		36	75.0
	42	75.0		42	75.0		42	75.0
	48	75.0		48	75.0		48	75.0
	54	75.0		54	75.0		54	75.0
	60	75.0		60	75.0		60	75.0
	66	75.0		66	75.0		66	71.2
						96	24	75.0
							30	75.0
							36	75.0
							42	75.0
							48	71.1
							54	65.0
							60	60.4
							66	57.0

MULLION TABLE 11.1B

(VERTICAL SPAN — 1" Aluminum Reinforcing Mull w/Reinforcement)

MULL SPAN	LOAD WIDTH	DP (PSF)	MULL SPAN	LOAD WIDTH	DP (PSF)	MULL SPAN	LOAD WIDTH	DP (PSF)
24	24	75.0	48	24	75.0	72	24	75.0
	30	75.0		30	75.0		30	75.0
	36	75.0		36	75.0		36	75.0
	42	75.0		42	75.0		42	75.0
	48	75.0		48	75.0		48	75.0
	54	75.0		54	75.0		54	75.0
	60	75.0		60	75.0		60	75.0
	66	75.0		66	75.0		66	75.0
30	24	75.0	54	24	75.0	78	24	75.0
	30	75.0		30	75.0		30	75.0
	36	75.0		36	75.0		36	75.0
	42	75.0		42	75.0		42	75.0
	48	75.0		48	75.0		48	75.0
	54	75.0		54	75.0		54	75.0
	60	75.0		60	75.0		60	75.0
	66	75.0		66	75.0		66	75.0
36	24	75.0	60	24	75.0	84	24	75.0
	30	75.0		30	75.0		30	75.0
	36	75.0		36	75.0		36	75.0
	42	75.0		42	75.0		42	75.0
	48	75.0		48	75.0		48	75.0
	54	75.0		54	75.0		54	75.0
	60	75.0		60	75.0		60	75.0
	66	75.0		66	75.0		66	75.0
42	24	75.0	66	24	75.0	90	24	75.0
	30	75.0		30	75.0		30	75.0
	36	75.0		36	75.0		36	75.0
	42	75.0		42	75.0		42	75.0
	48	75.0		48	75.0		48	75.0
	54	75.0		54	75.0		54	75.0
	60	75.0		60	75.0		60	75.0
	66	75.0		66	75.0		66	75.0
						96	24	75.0
							30	75.0
							36	75.0
							42	75.0
							48	75.0
							54	75.0
							60	75.0
							66	75.0

TABLE 3.1A ANCHOR QUANTITIES (PER CLIP END)

SUBSTRATE	ANCHOR	MIN. QUANTITY
WOOD	WOOD OR TAPPING SCREW	4
1/8" THICK ASTM A-36	TAPPING SCREW	3
1/8" THICK 6063-T5	TAPPING SCREW	7
0.0346" THICK ASTM A-653, 33 KSI (STEEL STUDS)	TAPPING SCREW	9

1) SEE ANCHOR SCHEDULE FOR FASTENER REQUIREMENTS.
2) ANCHOR QUANTITIES ARE FOR EACH CLIP END.

TABLE 3.1B ANCHOR QUANTITIES (PER CLIP END)

SUBSTRATE	ANCHOR	MIN. QUANTITY
WOOD	WOOD OR TAPPING SCREW	5
1/8" THICK ASTM A-36	TAPPING SCREW	4
1/8" THICK 6063-T5	TAPPING SCREW	9
0.0346" THICK ASTM A-653, 33 KSI (STEEL STUDS)	TAPPING SCREW	NOT RECOMMENDED

1) SEE ANCHOR SCHEDULE FOR FASTENER REQUIREMENTS.
2) ANCHOR QUANTITIES ARE FOR EACH CLIP END.

PROJECT # 411-1205

REV	DESCRIPTION	DATE	BY
A	REVISED PER MD COMMENTS	2/25/14	RJA

PELLA CORPORATION
102 MAIN STREET
PELLA, IA 50219

TITLE: SERIES 350 4-1/2" VINYL WINDOW MULLIONS - IMPACT FIN FRAME - UNREINF. & REINF. MULL - TABLE 11.1A/B

DATE: 03/04/13
DRAWING NO: PELL0033
SHEET: 25 OF 36
DRAWN BY: RJA
SCALE: N.T.S.
REV: A

PREPARED BY:
PTC PRODUCT DESIGN GROUP, LLC
PO BOX 520773
LONGWOOD, FLORIDA 32752
EBPE-C.A. NO. 25935
Phone: 321.890.1788
Fax: 321.890.1789
Email: info@ptc-corp.com

Approved as complying with the Florida Building Code
Date April 17 2014
NOA# 13-0610.03
Miami Dade Product Control
By

Robert J. Amoruso, P.E.
Florida P.E. No. 49752

ROBERT JAMES AMORUSO
LICENSE
No 49752
2/25/14
STATE OF FLORIDA
PROFESSIONAL ENGINEER

1" HORIZONTAL UNREINF. & REINF. MULLION IN A TRANSOM OVER A MULTI-WIDE CONFIGURATION

FIN FRAME (CLIP V984356/V984357) INSTALLATION

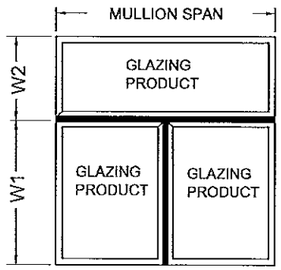

$$\text{LOAD WIDTH} = \frac{W1 + W2}{2}$$

TABLE 3.2A ANCHOR QUANTITIES (PER CLIP END)		
SUBSTRATE	ANCHOR	MIN. QUANTITY
WOOD	WOOD OR TAPPING SCREW	5
1/8" THICK ASTM A-36	TAPPING SCREW	4
1/8" THICK 6063-T5	TAPPING SCREW	9
0.0346" THICK ASTM A-653, 33 KSI (STEEL STUDS)	TAPPING SCREW	NOT RECOMMENDED
1) SEE ANCHOR SCHEDULE FOR FASTENER REQUIREMENTS. 2) ANCHOR QUANTITIES ARE FOR EACH CLIP END.		

TABLE 3.2B ANCHOR QUANTITIES (PER CLIP END)		
SUBSTRATE	ANCHOR	MIN. QUANTITY
WOOD	WOOD OR TAPPING SCREW	6
1/8" THICK ASTM A-36	TAPPING SCREW	5
1/8" THICK 6063-T5	TAPPING SCREW	10
0.0346" THICK ASTM A-653, 33 KSI (STEEL STUDS)	TAPPING SCREW	NOT RECOMMENDED
1) SEE ANCHOR SCHEDULE FOR FASTENER REQUIREMENTS. 2) ANCHOR QUANTITIES ARE FOR EACH CLIP END.		

MULLION TABLE 11.2A

(HORIZONTAL 3-WAY SPAN — 1" ALUMINUM REINFORCING MULLION)

MULL SPAN	LOAD WIDTH	DP (PSF)	MULL SPAN	LOAD WIDTH	DP (PSF)	MULL SPAN	LOAD WIDTH	DP (PSF)
48	24	75.0	78	24	75.0	108	24	75.0
	30	75.0		30	75.0		30	75.0
	36	75.0		36	75.0		36	65.6
	42	75.0		42	75.0		42	57.6
	48	75.0		48	75.0		48	51.7
	54	75.0		54	75.0		54	47.2
	60	75.0		60	75.0		60	43.5
	66	75.0		66	75.0		66	40.6
	72	75.0		72	75.0		72	38.1
54	24	75.0	84	24	75.0	114	24	75.0
	30	75.0		30	75.0		30	64.9
	36	75.0		36	75.0		36	55.4
	42	75.0		42	75.0		42	48.6
	48	75.0		48	75.0		48	43.5
	54	75.0		54	75.0		54	39.6
	60	75.0		60	75.0		60	36.5
	66	75.0		66	75.0		66	34.0
	72	75.0		72	75.0		72	31.9
60	24	75.0	90	24	75.0	120	24	67.8
	30	75.0		30	75.0		30	55.4
	36	75.0		36	75.0		36	47.1
	42	75.0		42	75.0		42	41.3
	48	75.0		48	75.0		48	36.9
	54	75.0		54	75.0		54	33.6
	60	75.0		60	75.0		60	30.9
	66	75.0		66	73.8		66	28.8
	72	75.0		72	69.6		72	27.0
66	24	75.0	96	24	75.0			
	30	75.0		30	75.0			
	36	75.0		36	75.0			
	42	75.0		42	75.0			
	48	75.0		48	75.0			
	54	75.0		54	69.1			
	60	75.0		60	63.9			
	66	75.0		66	59.7			
	72	75.0		72	56.1			
72	24	75.0	102	24	75.0			
	30	75.0		30	75.0			
	36	75.0		36	75.0			
	42	75.0		42	69.1			
	48	75.0		48	62.1			
	54	75.0		54	56.8			
	60	75.0		60	52.4			
	66	75.0		66	48.9			
	72	75.0		72	46.0			

MULLION TABLE 11.2B

(HORIZONTAL 3-WAY SPAN — 1" Aluminum Reinforcing Mullion w/Reinforcement)

MULL SPAN	LOAD WIDTH	DP (PSF)	MULL SPAN	LOAD WIDTH	DP (PSF)	MULL SPAN	LOAD WIDTH	DP (PSF)
48	24	75.0	78	24	75.0	108	24	75.0
	30	75.0		30	75.0		30	75.0
	36	75.0		36	75.0		36	75.0
	42	75.0		42	75.0		42	75.0
	48	75.0		48	75.0		48	75.0
	54	75.0		54	75.0		54	72.6
	60	75.0		60	75.0		60	67.0
	66	75.0		66	75.0		66	62.4
	72	75.0		72	75.0		72	58.6
54	24	75.0	84	24	75.0	114	24	75.0
	30	75.0		30	75.0		30	75.0
	36	75.0		36	75.0		36	75.0
	42	75.0		42	75.0		42	74.7
	48	75.0		48	75.0		48	67.0
	54	75.0		54	75.0		54	61.0
	60	75.0		60	75.0		60	56.2
	66	75.0		66	75.0		66	52.3
	72	75.0		72	75.0		72	49.1
60	24	75.0	90	24	75.0	120	24	75.0
	30	75.0		30	75.0		30	75.0
	36	75.0		36	75.0		36	72.6
	42	75.0		42	75.0		42	63.6
	48	75.0		48	75.0		48	56.9
	54	75.0		54	75.0		54	51.7
	60	75.0		60	75.0		60	47.6
	66	75.0		66	75.0		66	44.3
	72	75.0		72	75.0		72	41.5
66	24	75.0	96	24	75.0			
	30	75.0		30	75.0			
	36	75.0		36	75.0			
	42	75.0		42	75.0			
	48	75.0		48	75.0			
	54	75.0		54	75.0			
	60	75.0		60	75.0			
	66	75.0		66	75.0			
	72	75.0		72	75.0			
72	24	75.0	102	24	75.0			
	30	75.0		30	75.0			
	36	75.0		36	75.0			
	42	75.0		42	75.0			
	48	75.0		48	75.0			
	54	75.0		54	75.0			
	60	75.0		60	75.0			
	66	75.0		66	75.0			
	72	75.0		72	70.7			

PROJECT # 411-1205

REV	DESCRIPTION	DATE	BY
A	REVISED PER MD COMMENTS	2/25/14	RJA

PELLA CORPORATION
102 MAIN STREET
PELLA, IA 50219

TITLE: SERIES 350 4-1/2" VINYL WINDOW MULLIONS - IMPACT
FIN FRAME - UNREINF. & REINF. MULL - TABLE 11.2A/B

DATE: 03/04/13
DRAWING NO: PELL0033
SHEET: 26 OF 36
DRAWN BY: RJA
SCALE: N.T.S.
REV: A

PREPARED BY:
PTC PRODUCT DESIGN GROUP, LLC
PO BOX 520773
LONGWOOD, FLORIDA 32752
FBPE C.A. NO. 25805
Phone: 321.800.1788
Fax: 321.800.1789
Email: info@ptc-corp.com

Approved as complying with the Florida Building Code
Date April 11, 2014
NOA# 13-0610.03
Miami Dade Product Control
By

Robert J. Amoruso, P.E.
Florida P.E. No. 49752

ROBERT JAMES AMORUSO
LICENSE
No 49752
2/25/14
STATE OF FLORIDA
PROFESSIONAL ENGINEER

1" VERTICAL UNREINF. & REINF. MULLION IN A 4-WAY MULTI-WIDE, MULTI-HIGH CONFIGURATION

FIN FRAME (CLIP V984356/V984357) INSTALLATION

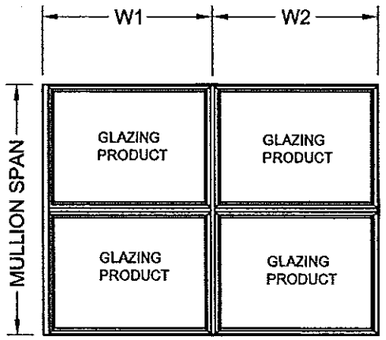

$$\text{LOAD WIDTH} = \frac{W1 + W2}{2}$$

TABLE 4.1A ANCHOR QUANTITIES (PER CLIP END)

SUBSTRATE	ANCHOR	MIN. QUANTITY
WOOD	WOOD OR TAPPING SCREW	4
1/8" THICK ASTM A-36	TAPPING SCREW	3
1/8" THICK 6063-T5	TAPPING SCREW	7
0.0346" THICK ASTM A-653, 33 KSI (STEEL STUDS)	TAPPING SCREW	9

1) SEE ANCHOR SCHEDULE FOR FASTENER REQUIREMENTS.
2) ANCHOR QUANTITIES ARE FOR EACH CLIP END.

TABLE 4.1B ANCHOR QUANTITIES (PER CLIP END)

SUBSTRATE	ANCHOR	MIN. QUANTITY
WOOD	WOOD OR TAPPING SCREW	5
1/8" THICK ASTM A-36	TAPPING SCREW	4
1/8" THICK 6063-T5	TAPPING SCREW	9
0.0346" THICK ASTM A-653, 33 KSI (STEEL STUDS)	TAPPING SCREW	NOT RECOMMENDED

1) SEE ANCHOR SCHEDULE FOR FASTENER REQUIREMENTS.
2) ANCHOR QUANTITIES ARE FOR EACH CLIP END.

MULLION TABLE 12.1A
(VERTICAL 4-WAY SPAN — 1" Aluminum Reinforcing Mull)

MULL SPAN	LOAD WIDTH	DP (PSF)	MULL SPAN	LOAD WIDTH	DP (PSF)	MULL SPAN	LOAD WIDTH	DP (PSF)
36	24	75.0	66	24	75.0	96	24	75.0
	30	75.0		30	75.0		30	75.0
	36	75.0		36	75.0		36	75.0
	42	75.0		42	75.0		42	75.0
	48	75.0		48	75.0		48	71.3
	54	75.0		54	75.0		54	64.2
	60	75.0		60	75.0		60	58.4
	66	75.0		66	75.0		66	53.5
	72	75.0		72	75.0		72	49.4
42	24	75.0	72	24	75.0	102	24	75.0
	30	75.0		30	75.0		30	75.0
	36	75.0		36	75.0		36	75.0
	42	75.0		42	75.0		42	66.7
	48	75.0		48	75.0		48	59.1
	54	75.0		54	75.0		54	53.2
	60	75.0		60	75.0		60	48.4
	66	75.0		66	75.0		66	44.4
	72	75.0		72	75.0		72	41.0
48	24	75.0	78	24	75.0	108	24	75.0
	30	75.0		30	75.0		30	75.0
	36	75.0		36	75.0		36	64.4
	42	75.0		42	75.0		42	55.9
	48	75.0		48	75.0		48	49.5
	54	75.0		54	75.0		54	44.5
	60	75.0		60	75.0		60	40.5
	66	75.0		66	75.0		66	37.2
	72	75.0		72	75.0		72	34.4
54	24	75.0	84	24	75.0	114	24	75.0
	30	75.0		30	75.0		30	64.8
	36	75.0		36	75.0		36	54.6
	42	75.0		42	75.0		42	47.3
	48	75.0		48	75.0		48	41.9
	54	75.0		54	75.0		54	37.7
	60	75.0		60	75.0		60	34.3
	66	75.0		66	74.2		66	31.5
	72	75.0		72	68.0		72	29.1
60	24	75.0	90	24	75.0	120	24	68.5
	30	75.0		30	75.0		30	55.4
	36	75.0		36	75.0		36	46.6
	42	75.0		42	75.0		42	40.4
	48	75.0		48	75.0		48	35.7
	54	75.0		54	75.0		54	32.1
	60	75.0		60	71.1		60	29.2
	66	75.0		66	64.6		66	26.8
	72	75.0		72	59.2		72	24.8

MULLION TABLE 12.1B
(VERTICAL 4-WAY SPAN — 1" Aluminum Reinforcing Mull w/Reinforcement)

MULL SPAN	LOAD WIDTH	DP (PSF)	MULL SPAN	LOAD WIDTH	DP (PSF)	MULL SPAN	LOAD WIDTH	DP (PSF)
36	24	75.0	66	24	75.0	96	24	75.0
	30	75.0		30	75.0		30	75.0
	36	75.0		36	75.0		36	75.0
	42	75.0		42	75.0		42	75.0
	48	75.0		48	75.0		48	75.0
	54	75.0		54	75.0		54	75.0
	60	75.0		60	75.0		60	75.0
	66	75.0		66	75.0		66	75.0
	72	75.0		72	75.0		72	75.0
42	24	75.0	72	24	75.0	102	24	75.0
	30	75.0		30	75.0		30	75.0
	36	75.0		36	75.0		36	75.0
	42	75.0		42	75.0		42	75.0
	48	75.0		48	75.0		48	75.0
	54	75.0		54	75.0		54	75.0
	60	75.0		60	75.0		60	74.5
	66	75.0		66	75.0		66	68.3
	72	75.0		72	75.0		72	63.1
48	24	75.0	78	24	75.0	108	24	75.0
	30	75.0		30	75.0		30	75.0
	36	75.0		36	75.0		36	75.0
	42	75.0		42	75.0		42	75.0
	48	75.0		48	75.0		48	75.0
	54	75.0		54	75.0		54	68.6
	60	75.0		60	75.0		60	62.4
	66	75.0		66	75.0		66	57.3
	72	75.0		72	75.0		72	52.9
54	24	75.0	84	24	75.0	114	24	75.0
	30	75.0		30	75.0		30	75.0
	36	75.0		36	75.0		36	75.0
	42	75.0		42	75.0		42	72.8
	48	75.0		48	75.0		48	64.5
	54	75.0		54	75.0		54	58.0
	60	75.0		60	75.0		60	52.8
	66	75.0		66	75.0		66	48.4
	72	75.0		72	75.0		72	44.8
60	24	75.0	90	24	75.0	120	24	75.0
	30	75.0		30	75.0		30	75.0
	36	75.0		36	75.0		36	71.8
	42	75.0		42	75.0		42	62.2
	48	75.0		48	75.0		48	55.0
	54	75.0		54	75.0		54	49.4
	60	75.0		60	75.0		60	45.0
	66	75.0		66	75.0		66	41.3
	72	75.0		72	75.0		72	38.2

PROJECT # 411-1205

REV	DESCRIPTION	DATE	BY
A	REVISED PER MD COMMENTS	2/25/14	RJA

PELLA CORPORATION
102 MAIN STREET
PELLA, IA 50219

TITLE: SERIES 350 4-1/2" VINYL WINDOW MULLIONS - IMPACT FIN FRAME - UNREINF. & REINF. MULL - TABLE 12.1A/B

DATE: 03/04/13
DRAWING NO: PELL0033
DRAWN BY: RJA
SCALE: N.T.S.
SHEET: 27 OF 36
REV: A

PREPARED BY:
PTC PRODUCT DESIGN GROUP, LLC
PO BOX 520775
LONGWOOD, FLORIDA 32752
FBPE C.A. NO. 25835
Phone: 321.690.1788
Fax: 321.690.1789
Email: info@ptc-corp.com

Approved as complying with the Florida Building Code
Date April 17, 2014
NOA# 13-0610.03
Miami Dade Product Control
By: Manuel Perez

Robert J. Amoruso, P.E.
Florida P.E. No. 49752

ROBERT JAMES AMORUSO
LICENSE
No 49752
4/25/14
STATE OF FLORIDA
PROFESSIONAL ENGINEER

1" HORIZONTAL UNREINF. & REINF. MULLION IN A 4-WAY MULTI-WIDE, MULTI-HIGH CONFIGURATION

FIN FRAME (CLIP V984356/V984357) INSTALLATION

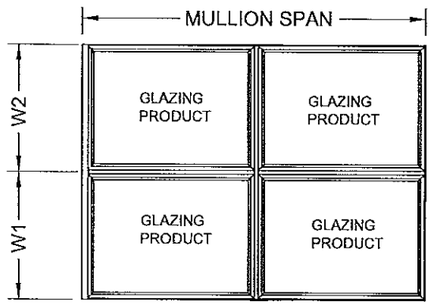

$$\text{LOAD WIDTH} = \frac{W1 + W2}{2}$$

MULLION TABLE 12.2A
(HORIZONTAL 4-WAY SPAN — 1" Aluminum Reinforcing Mull)

MULL SPAN	LOAD WIDTH	DP (PSF)	MULL SPAN	LOAD WIDTH	DP (PSF)	MULL SPAN	LOAD WIDTH	DP (PSF)
36	24	75.0	66	24	75.0	96	24	75.0
	30	75.0		30	75.0		30	75.0
	36	75.0		36	75.0		36	75.0
	42	75.0		42	75.0		42	75.0
	48	75.0		48	75.0		48	71.3
	54	75.0		54	75.0		54	62.5
	60	75.0		60	75.0		60	55.1
42	24	75.0	72	24	75.0	102	24	75.0
	30	75.0		30	75.0		30	75.0
	36	75.0		36	75.0		36	75.0
	42	75.0		42	75.0		42	69.2
	48	75.0		48	75.0		48	59.9
	54	75.0		54	75.0		54	52.5
	60	75.0		60	75.0		60	46.5
48	24	75.0	78	24	75.0	108	24	75.0
	30	75.0		30	75.0		30	75.0
	36	75.0		36	75.0		36	67.1
	42	75.0		42	75.0		42	58.3
	48	75.0		48	75.0		48	50.7
	54	75.0		54	75.0		54	44.5
	60	75.0		60	75.0		60	39.6
54	24	75.0	84	24	75.0	114	24	70.4
	30	75.0		30	75.0		30	63.6
	36	75.0		36	75.0		36	56.4
	42	75.0		42	75.0		42	49.5
	48	75.0		48	75.0		48	43.3
	54	75.0		54	75.0		54	38.1
	60	75.0		60	75.0		60	33.9
60	24	75.0	90	24	75.0	120	24	58.3
	30	75.0		30	75.0		30	53.3
	36	75.0		36	75.0		36	67.1
	42	75.0		42	75.0		42	42.2
	48	75.0		48	75.0		48	37.2
	54	75.0		54	75.0		54	32.8
	60	75.0		60	65.8		60	29.2

MULLION TABLE 12.2B
(HORIZONTAL 4-WAY SPAN — 1" Aluminum Reinforcing Mull W/Reinforcement)

MULL SPAN	LOAD WIDTH	DP (PSF)	MULL SPAN	LOAD WIDTH	DP (PSF)	MULL SPAN	LOAD WIDTH	DP (PSF)
36	24	75.0	66	24	75.0	96	24	75.0
	30	75.0		30	75.0		30	75.0
	36	75.0		36	75.0		36	75.0
	42	75.0		42	75.0		42	75.0
	48	75.0		48	75.0		48	75.0
	54	75.0		54	75.0		54	75.0
	60	75.0		60	75.0		60	75.0
42	24	75.0	72	24	75.0	102	24	75.0
	30	75.0		30	75.0		30	75.0
	36	75.0		36	75.0		36	75.0
	42	75.0		42	75.0		42	75.0
	48	75.0		48	75.0		48	75.0
	54	75.0		54	75.0		54	75.0
	60	75.0		60	75.0		60	71.6
48	24	75.0	78	24	75.0	108	24	75.0
	30	75.0		30	75.0		30	75.0
	36	75.0		36	75.0		36	75.0
	42	75.0		42	75.0		42	75.0
	48	75.0		48	75.0		48	75.0
	54	75.0		54	75.0		54	68.6
	60	75.0		60	75.0		60	60.9
54	24	75.0	84	24	75.0	114	24	75.0
	30	75.0		30	75.0		30	75.0
	36	75.0		36	75.0		36	75.0
	42	75.0		42	75.0		42	75.0
	48	75.0		48	75.0		48	66.7
	54	75.0		54	75.0		54	58.6
	60	75.0		60	75.0		60	52.2
60	24	75.0	90	24	75.0	120	24	75.0
	30	75.0		30	75.0		30	75.0
	36	75.0		36	75.0		36	75.0
	42	75.0		42	75.0		42	65.0
	48	75.0		48	75.0		48	57.2
	54	75.0		54	75.0		54	50.5
	60	75.0		60	75.0		60	45.0

TABLE 4.2A ANCHOR QUANTITIES (PER CLIP END)

SUBSTRATE	ANCHOR	MIN. QUANTITY
WOOD	WOOD OR TAPPING SCREW	4
1/8" THICK ASTM A-36	TAPPING SCREW	3
1/8" THICK 6063-T5	TAPPING SCREW	7
0.0346" THICK ASTM A-653, 33 KSI (STEEL STUDS)	TAPPING SCREW	9

1) SEE ANCHOR SCHEDULE FOR FASTENER REQUIREMENTS.
2) ANCHOR QUANTITIES ARE FOR EACH CLIP END.

TABLE 4.2B ANCHOR QUANTITIES (PER CLIP END)

SUBSTRATE	ANCHOR	MIN. QUANTITY
WOOD	WOOD OR TAPPING SCREW	5
1/8" THICK ASTM A-36	TAPPING SCREW	4
1/8" THICK 6063-T5	TAPPING SCREW	9
0.0346" THICK ASTM A-653, 33 KSI (STEEL STUDS)	TAPPING SCREW	NOT RECOMMENDED

1) SEE ANCHOR SCHEDULE FOR FASTENER REQUIREMENTS.
2) ANCHOR QUANTITIES ARE FOR EACH CLIP END.

PROJECT # 411-1205

REV	DESCRIPTION	DATE	BY
A	REVISED PER MD COMMENTS	2/25/14	RJA

PELLA CORPORATION
102 MAIN STREET
PELLA, IA 50219

TITLE: SERIES 350 4-1/2" VINYL WINDOW MULLIONS - IMPACT
FIN FRAME - UNREINF. & REINF. MULL - TABLE 12.2A/B

DRAWN BY: RJA
DATE: 03/04/13
SCALE: N.T.S.
DRAWING NO: PELL0033
REV: A
SHEET: 28 OF 36

PREPARED BY:
PTC PRODUCT DESIGN GROUP, LLC
PO BOX 620776
LONGWOOD, FLORIDA 32752
FSPE C.A. NO. 25935
Phone: 321.690.1788
Fax: 321.690.1789
Email: info@ptc-corp.com

Approved as complying with the Florida Building Code
Date April 17, 2014
NOA# 13-0610.03
Miami Dade Product Control
By Manuel Perez

Robert J. Amoruso, P.E.
Florida P.E. No. 49752

ROBERT JAMES AMORUSO
LICENSE
No 49752
STATE OF FLORIDA
PROFESSIONAL ENGINEER
2/25/14

V984359 STRAP, 350 SERIES IMPACT MULLION

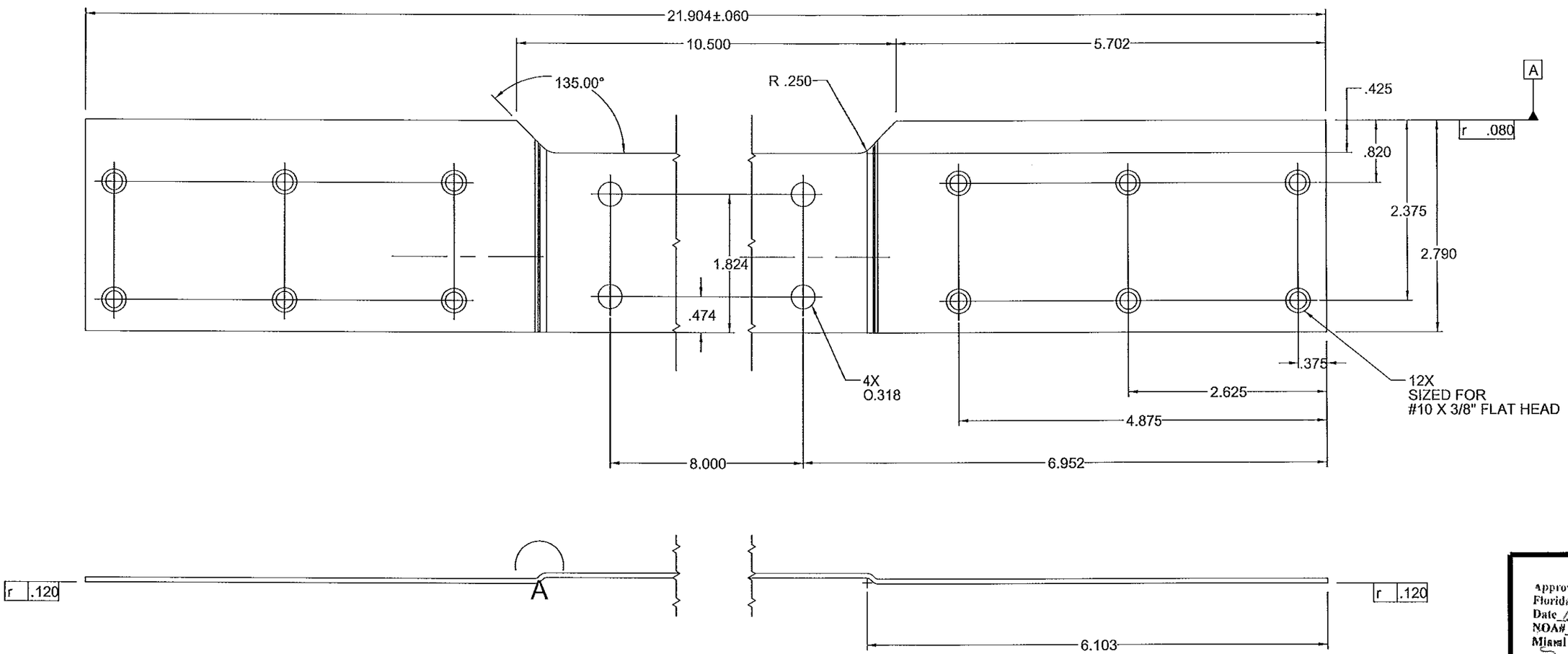

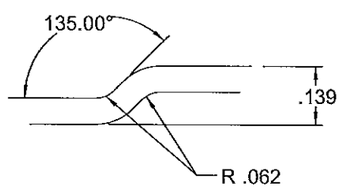

DETAIL A

MATERIAL / FINISH

16 GA
300 SERIES
STAINLESS STEEL
ANNEALED

REV	DESCRIPTION	DATE	BY
A	REVISED PER MD COMMENTS	2/25/14	RJA

PROJECT # 411-1205

PELLA CORPORATION
102 MAIN STREET
PELLA, IA 50219

TITLE: SERIES 350 4-1/2" VINYL WINDOW MULLIONS - IMPACT
V984359 STRAP DETAILS

DRAWN BY: RJA
DATE: 03/04/13
SCALE: N.T.S.
DRAWING NO: PELL0033
REV: A
SHEET: 29 OF 36

PREPARED BY:
PTC PRODUCT DESIGN GROUP, LLC
PO BOX 520775
LONGWOOD, FLORIDA 32752
FBPE C.A. NO. 25625
Phone: 321.860.1766
Fax: 321.480.2789
Email: info@ptc-corp.com

Approved as complying with the
Florida Building Code
Date April 17, 2014
NOA# 13-0610.03
Miami Dade Product Control
By Manuel Sarg

Robert J. Amoruso, P.E.
Florida P.E. No. 49752

ROBERT JAMES AMORUSO
LICENSE
No 49752
2/25/14
STATE OF
FLORIDA
PROFESSIONAL ENGINEER

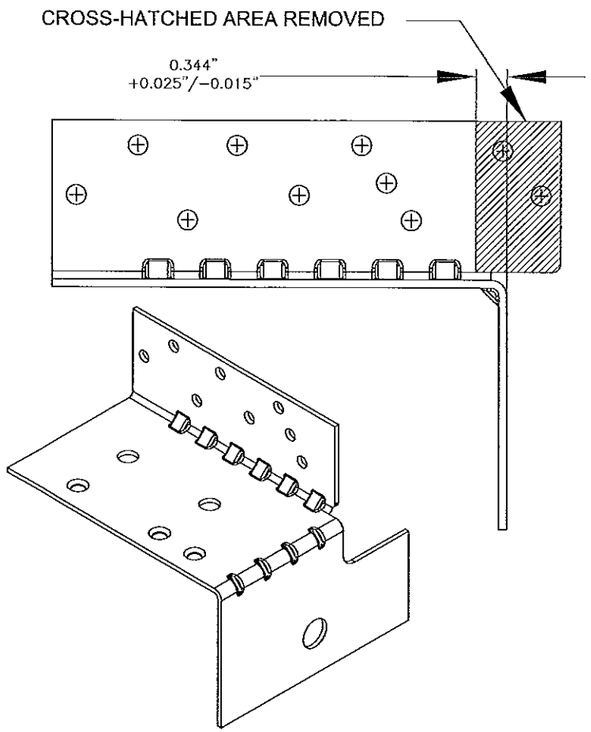

V984356 RH END ANCHOR (SEE NOTES)

V984357 LH END ANCHOR (SHOWN - SEE NOTES BELOW FOR V984356 RH END ANCHOR) NAIL FIN, STRUCTURAL MULLION 350 SERIES WINDOW

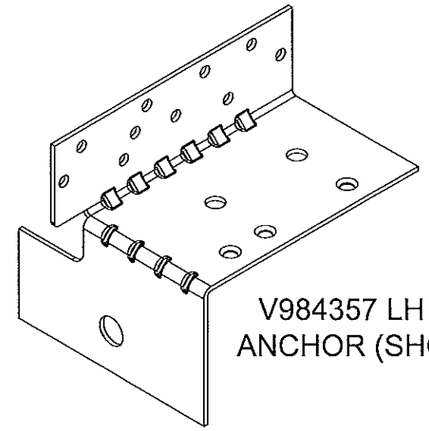

V984357 LH END ANCHOR (SHOWN)

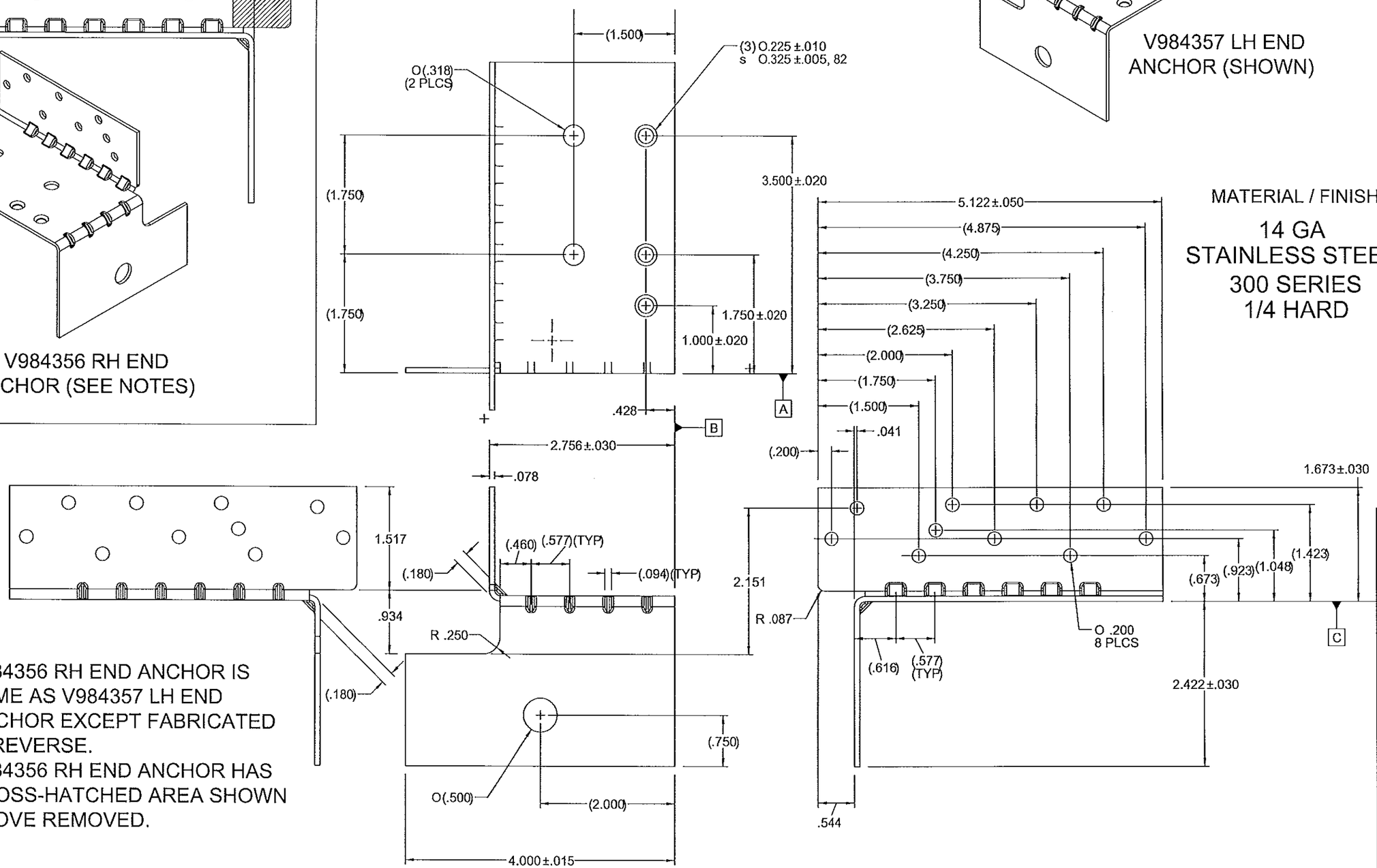

MATERIAL / FINISH

14 GA
STAINLESS STEEL
300 SERIES
1/4 HARD

NOTES:

1. V984356 RH END ANCHOR IS SAME AS V984357 LH END ANCHOR EXCEPT FABRICATED IN REVERSE.
2. V984356 RH END ANCHOR HAS CROSS-HATCHED AREA SHOWN ABOVE REMOVED.

PROJECT # 411-1205

REV	DESCRIPTION	DATE	BY
A	REVISED PER MD COMMENTS	2/25/14	RJA

PELLA CORPORATION
102 MAIN STREET
PELLA, IA 50219

TITLE: SERIES 350 4-1/2" VINYL WINDOW MULLIONS - IMPACT
V984357 / V984356 END ANCHOR NAIL FIN DETAILS

DRAWN BY: RJA
DATE: 03/04/13
SCALE: N.T.S.
DRAWING NO: PELL0033
REV: A
SHEET: 30 OF 36

PREPARED BY:
PTC PRODUCT DESIGN GROUP, LLC
PO BOX 520775
LONGWOOD, FLORIDA 32752
FSPE C.A. NO. 25935
Phone: 321.690.1788
Fax: 321.690.1789
Email: info@ptc-corp.com

Approved as complying with the Florida Building Code
Date April 17 2014
NOA# 13-0610.03
Miami Dade Product Control
Manuel Cruz

Robert J. Amoruso, P.E.
Florida P.E. No. 49752

ROBERT JAMES AMORUSO
LICENSE
No 49752
4/25/14
STATE OF
FLORIDA
PROFESSIONAL ENGINEER

V982510 END ANCHOR, 5/8 FLANGE 350 SERIES WINDOW

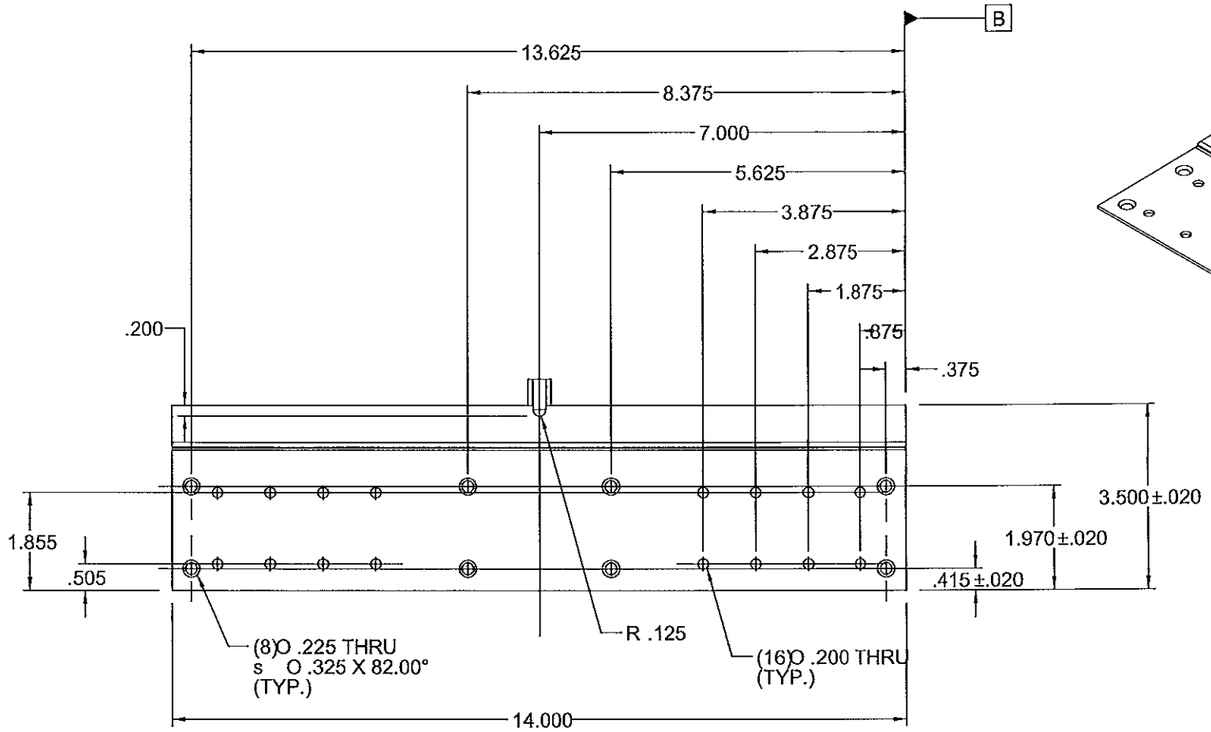

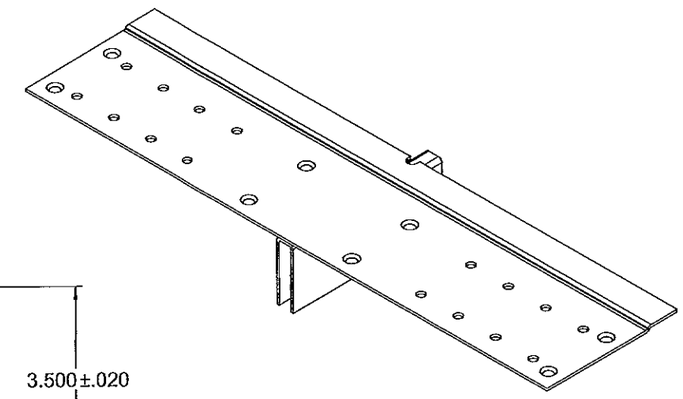

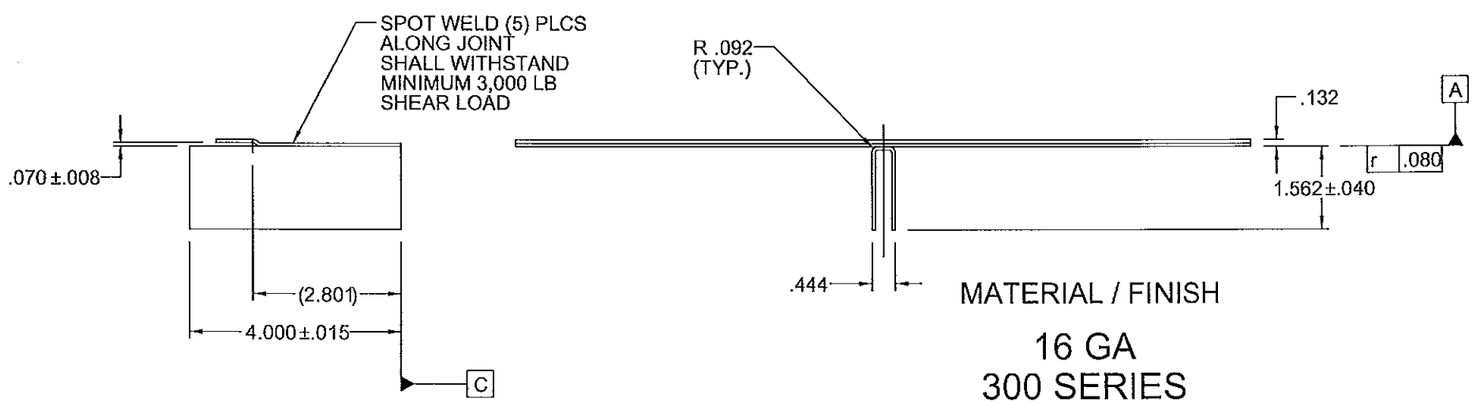

MATERIAL / FINISH

16 GA
300 SERIES
STAINLESS STEEL
1/4 HARD

PROJECT # 411-1205

REV	DESCRIPTION	DATE	BY
A	REVISED PER MD COMMENTS	2/25/14	RJA

PELLA CORPORATION
102 MAIN STREET
PELLA, IA 50219

TITLE: SERIES 350 4-1/2" VINYL WINDOW MULLIONS - IMPACT
V982510 END ANCHOR 5/8 FLANGE DETAILS

DRAWN BY: RJA
DATE: 03/04/13
SCALE: N.T.S.
DRAWING NO: PELL0033
REV: A
SHEET: 31 OF 36

PREPARED BY:
PTC PRODUCT DESIGN GROUP, LLC
PO BOX 320775
LONGWOOD, FLORIDA 32752
FBPE C.A. NO. 25025
Phone: 321.690.1788
Fax: 321.690.1789
Email: info@ptc-corp.com

Approved as complying with the
Florida Building Code
Date 4/11/2014
NOA# 13-0610.03
Miami Dade Product Control
By Manuel Perez

Robert J. Amoruso, P.E.
Florida P.E. No. 49752

ROBERT JAMES AMORUSO
LICENSE
No 49752
STATE OF
FLORIDA
PROFESSIONAL ENGINEER
2/25/14

V982535 END ANCHOR, 4.5" BLOCK FRAME 350 SERIES WINDOW

MATERIAL / FINISH

14 GA
STAINLESS STEEL
300 SERIES
1/4 HARD

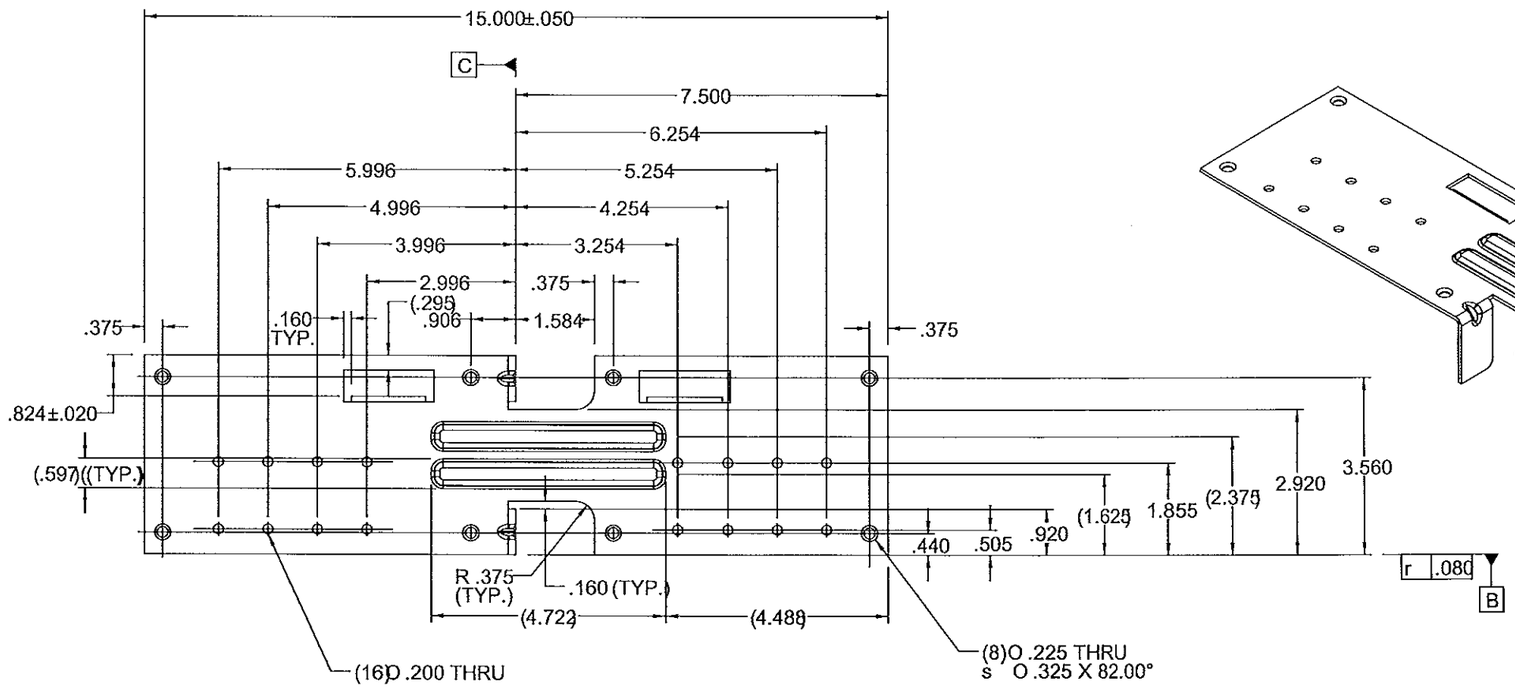

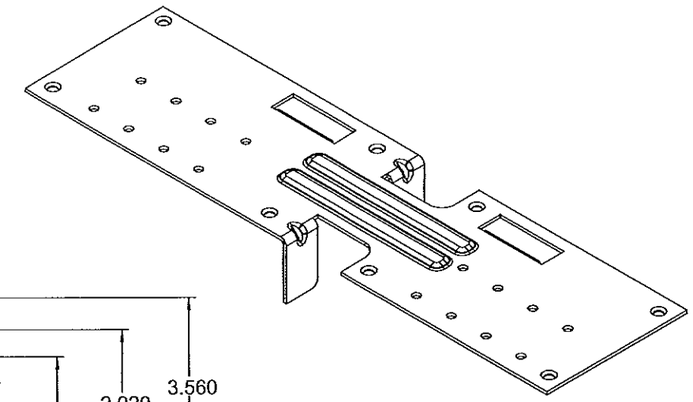

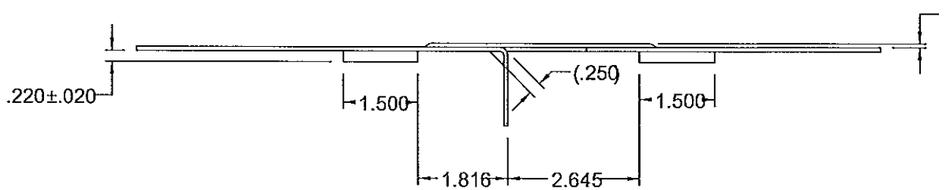

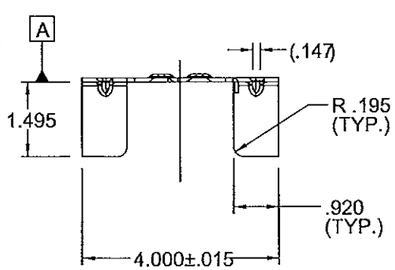

REV	DESCRIPTION	DATE	BY
A	REVISED PER MD COMMENTS	2/25/14	RJA

PROJECT # 411-1205

PELLA CORPORATION
102 MAIN STREET
PELLA, IA 50219

TITLE: SERIES 350 4-1/2" VINYL WINDOW MULLIONS - IMPACT
V982535 END ANCHOR 4.5" BLOCK FRAME DETAILS

DRAWN BY: RJA
DATE: 03/04/13
SCALE: N.T.S.
DRAWING NO: PELL0033
REV: A
SHEET: 32 OF 36

PREPARED BY:
PTC PRODUCT DESIGN GROUP, LLC
PO BOX 520775
LONGWOOD, FLORIDA 32752
FBPE C.A. NO. 25935
Phone: 321.850.1766
Fax: 321.690.7189
Email: info@ptc-corp.com

Approved as complying with the
Florida Building Code
Date April 17, 2014
NOA# 13-0610.03
Miami Dade Product Control
By Manuel Perez

Robert J. Amoruso, P.E.
Florida P.E. No. 49752

ROBERT JAMES AMORUSO
LICENSE
No 49752
2/25/14
STATE OF
FLORIDA
PROFESSIONAL ENGINEER

V982357 1" STRUCTURAL MULLION 350 SERIES WINDOW

MATERIAL / FINISH

ALUMINUM
6063-T6
MILL FINISH

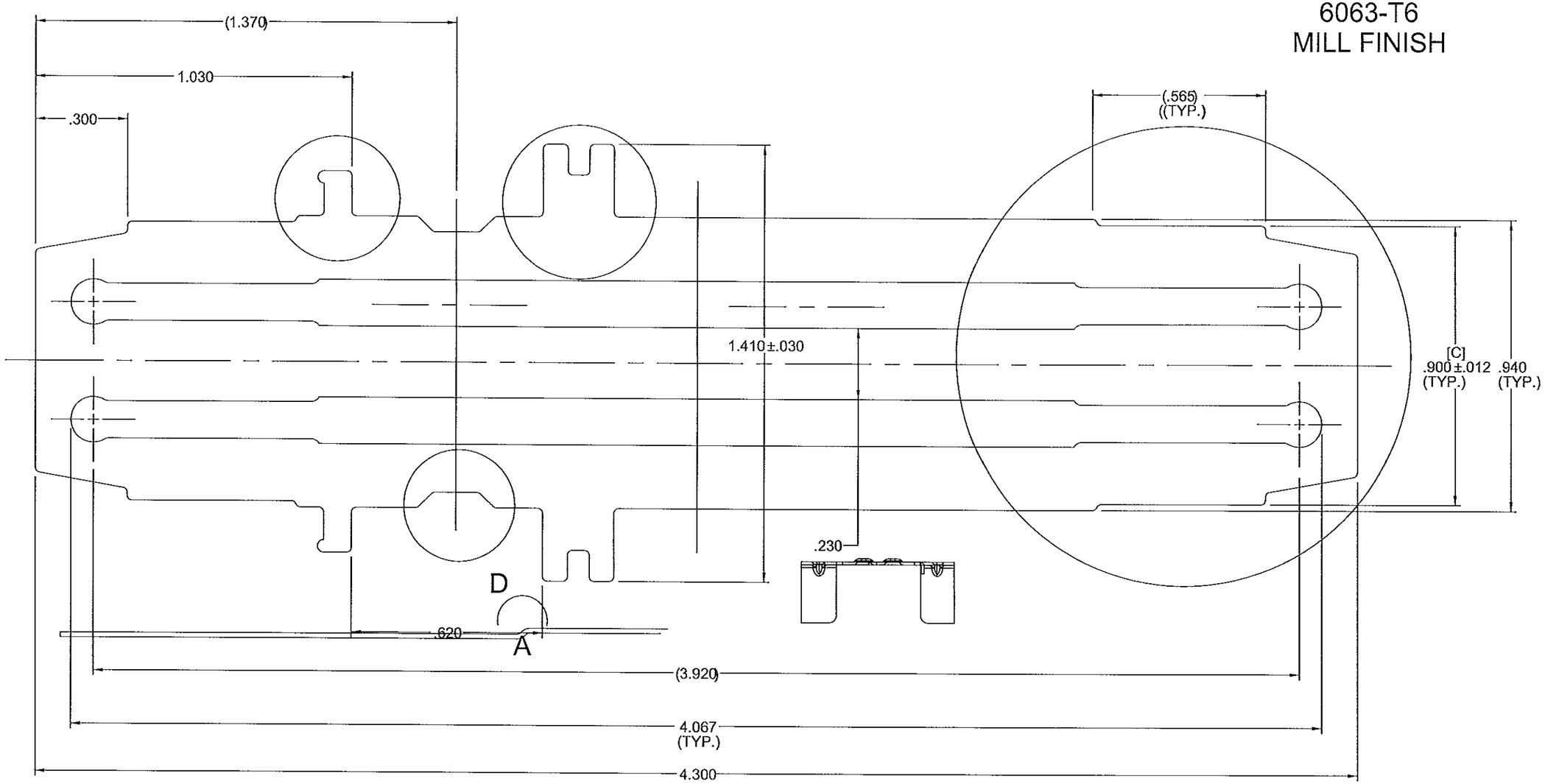

V982357 1" STRUCTURAL MULLION STEEL REINFORCEMENT

MATERIAL / FINISH

STAINLESS STEEL
304 SS
MILL FINISH

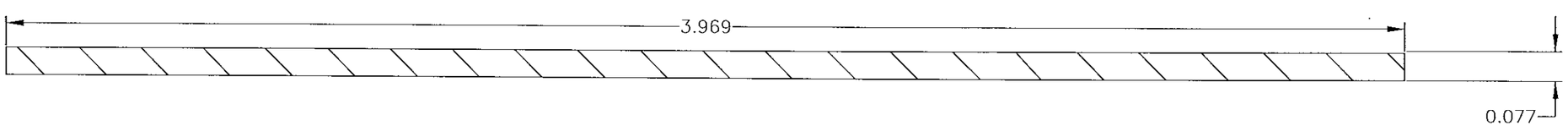

REV	DESCRIPTION	DATE	BY
A	REVISED PER MD COMMENTS	2/25/14	RJA

PROJECT # 411-1205

PELLA CORPORATION
102 MAIN STREET
PELLA, IA 50219

TITLE: SERIES 350 4-1/2" VINYL WINDOW MULLIONS - IMPACT
V982357 1" STRUCTURAL MULLION & REINFORCEMENT DETAILS

DRAWN BY: RJA
DATE: 03/04/13
SCALE: N.T.S.
DRAWING NO: PELL0033
REV: A
SHEET: 33 OF 36

PREPARED BY:
PTC PRODUCT DESIGN GROUP, LLC
PO BOX 520773
LONGWOOD, FLORIDA 32752
FSPE C.A. NO. 25805
Phone: 321.690.1788
Fax: 321.690.1789
Email: info@ptc-corp.com

Approved as complying with the
Florida Building Code
Date April 17, 2014
NOA# 13-0810.03
Miami Dade Product Control
By: Manuel Perez

Robert J. Amoruso, P.E.
Florida P.E. No. 49752

ROBERT JAMES AMORUSO
LICENSE
No 49752
2/25/14
STATE OF
FLORIDA
PROFESSIONAL ENGINEER

FIN FRAME END SPLICE COMPONENT
350 SERIES WINDOW MULLION SYSTEM
PART NO. V982365
MAT'L: EXTERIOR GRADE ACRYLONITRILE STYRENE ACRYLATE (ASA) PLASTIC

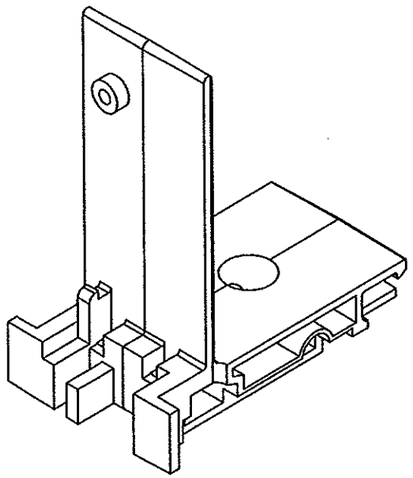

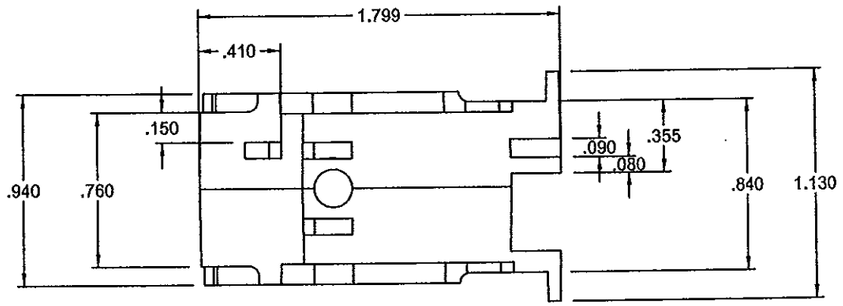

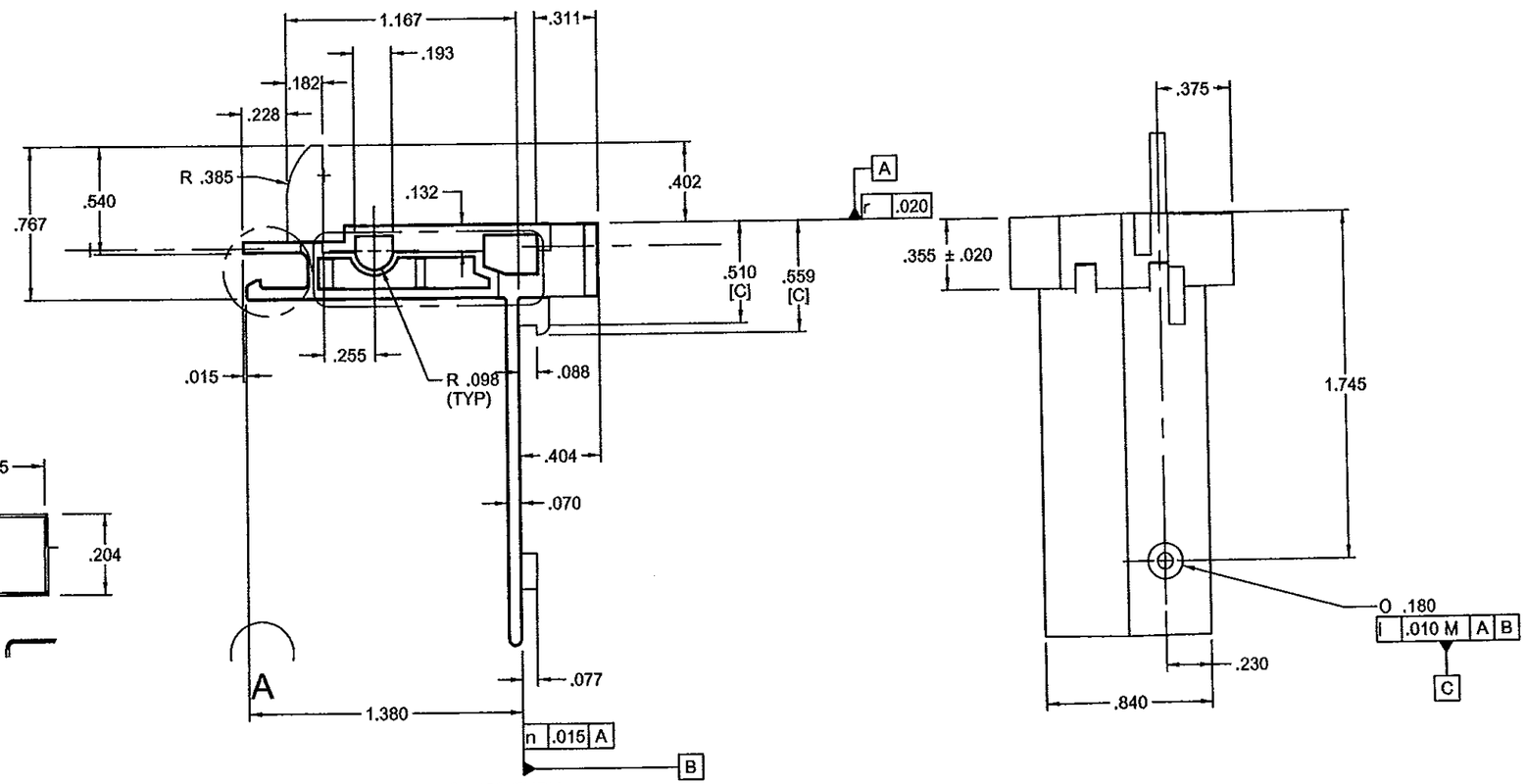

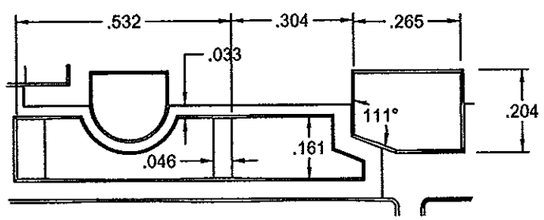

DETAIL B

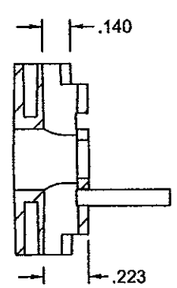

SECTION A-A

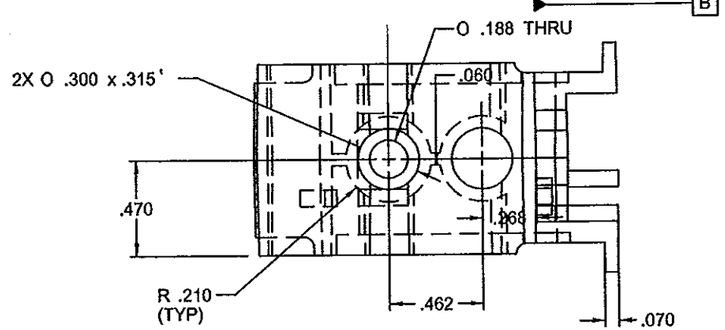

REV	DESCRIPTION	DATE	BY
A	REVISED PER MD COMMENTS	2/25/14	RJA

PROJECT # 411-1205

PELLA CORPORATION
102 MAIN STREET
PELLA, IA 50219

TITLE: SERIES 350 4-1/2" VINYL WINDOW MULLIONS - IMPACT NO. V982365 FIN FRAME END SPLICE DETAILS

DRAWN BY: RJA | DATE: 03/04/13
SCALE: N.T.S. | DRAWING NO: PELL0033
REV: A | SHEET: 34 OF 36

PREPARED BY:
PTC PRODUCT DESIGN GROUP, LLC
PO BOX 520775
LONGWOOD, FLORIDA 32752
FBPE C.A. NO. 25932
Phone: 321.690.1788
Fax: 321.690.1789
Email: info@ptc-corp.com

Approved as complying with the Florida Building Code
Date April 17, 2014
NOA# 13-0610.03
Miami Dade Product Control
By

Robert J. Amoruso, P.E.
Florida P.E. No. 49752

ROBERT JAMES AMORUSO
LICENSE
No 49752
STATE OF FLORIDA
PROFESSIONAL ENGINEER
2/25/14

5/8" FLANGE FRAME END SPLICE COMPONENT 350 SERIES WINDOW MULLION SYSTEM
PART NO. V982518
MAT'L: EXTERIOR GRADE ACRYLONITRILE STYRENE
ACRYLATE (ASA) PLASTIC

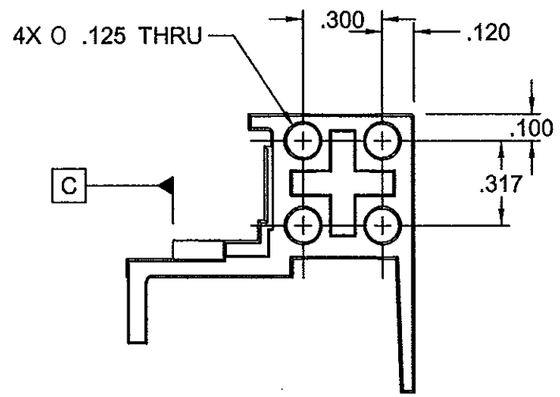

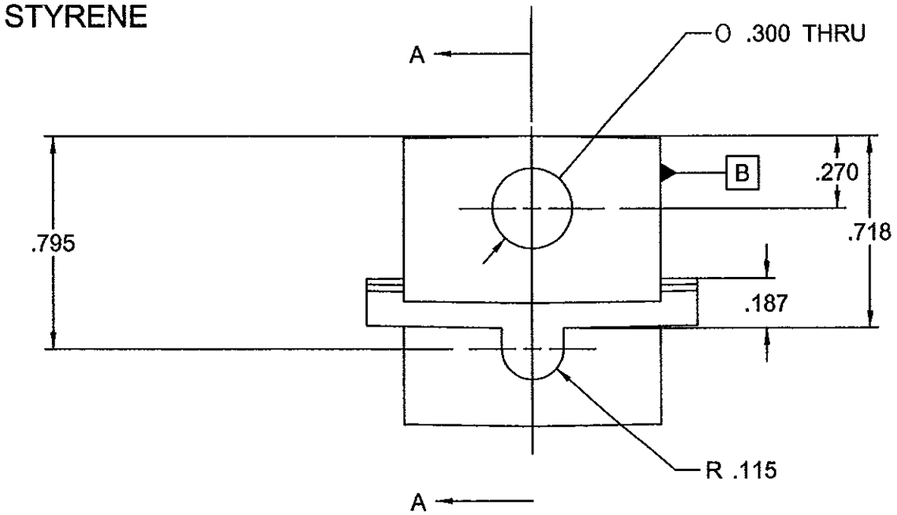

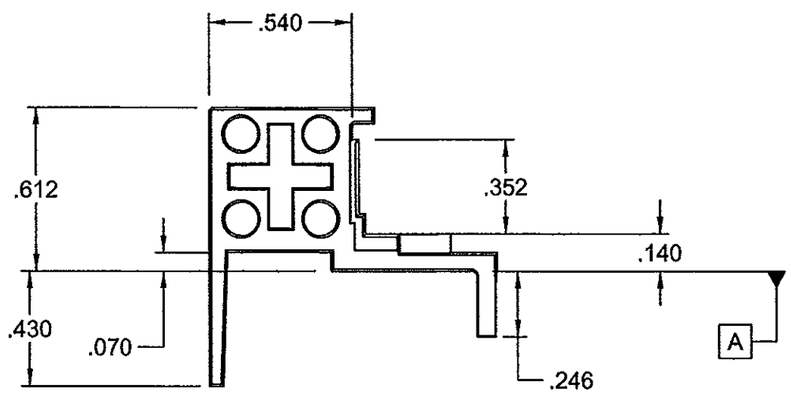

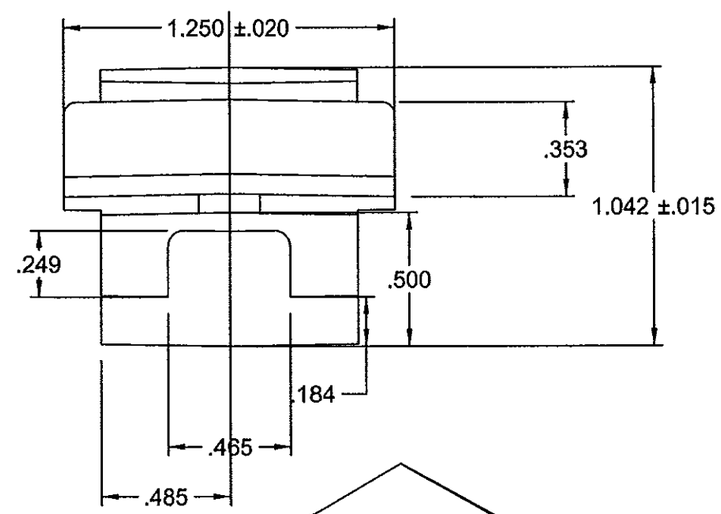

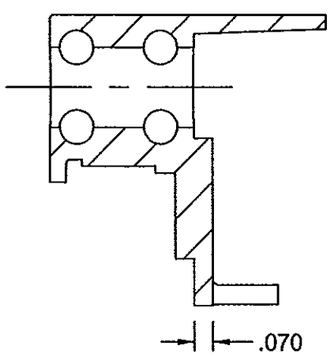

SECTION A-A

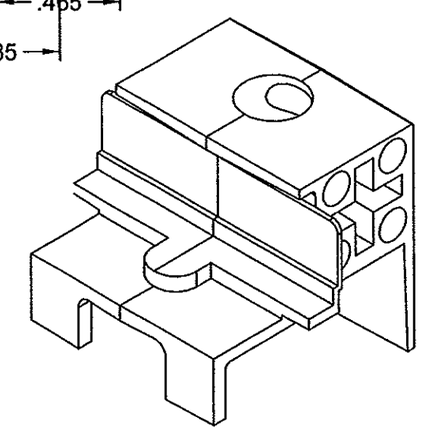

REV	DESCRIPTION	DATE	BY
A	REVISED PER MD COMMENTS	2/25/14	RJA

PROJECT # 411-1205

PELLA CORPORATION
102 MAIN STREET
PELLA, IA 50219

TITLE: SERIES 350 4-1/2" VINYL WINDOW MULLIONS - IMPACT
NO. V982518 5/8" FLANGE FRAME END SPLICE DETAILS

DRAWN BY: RJA
DATE: 03/04/13
SCALE: N.T.S.
DRAWING NO: PELL0033
REV: A
SHEET: 35 OF 36

PREPARED BY:
PTC PRODUCT DESIGN GROUP, LLC
PO BOX 520775
LONGWOOD, FLORIDA 32752
FBPE C.A. NO. 29145
Phone: 321.680.1788
Fax: 321.680.1789
Email: info@ptc-corp.com

Approved as complying with the
Florida Building Code
Date April 17 2014
NOA# 13-0610.03
Miami Dade Product Control
By

Robert J. Amoruso, P.E.
Florida P.E. No. 49752

ROBERT JAMES AMORUSO
LICENSE
No 49752
2/25/14
STATE OF
FLORIDA
PROFESSIONAL ENGINEER

FLUSH FLANGE FRAME END SPLICE COMPONENT
350 SERIES WINDOW MULLION SYSTEM
PART NO. V984416
MAT'L: EXTERIOR GRADE ACRYLONITRILE STYRENE ACRYLATE (ASA) PLASTIC

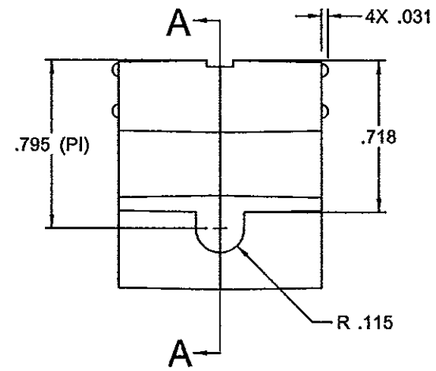

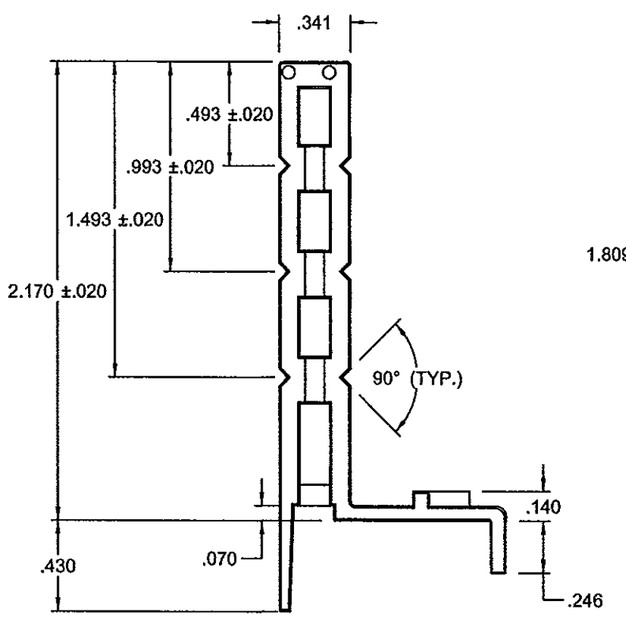

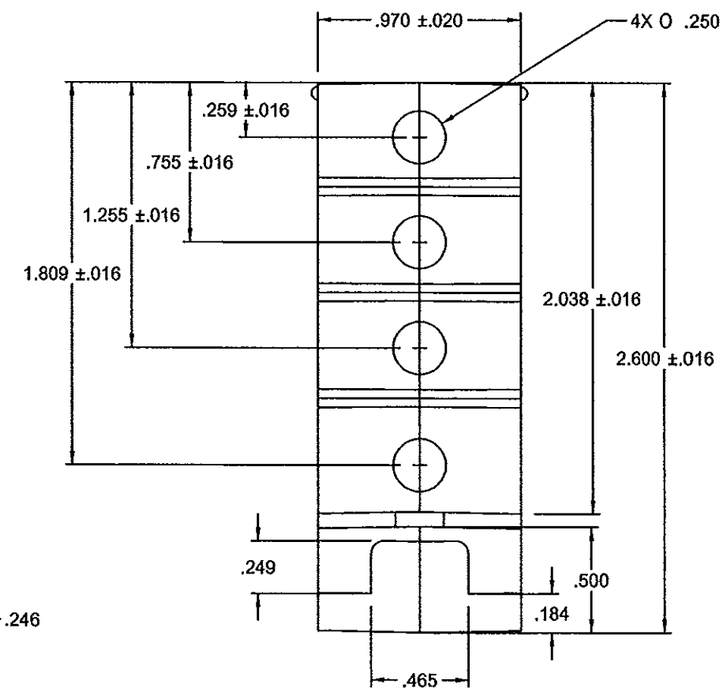

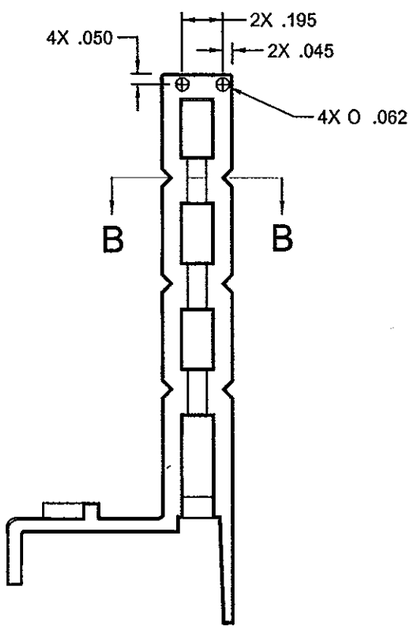

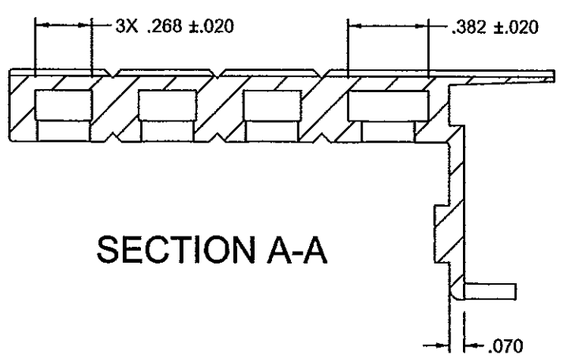

SECTION A-A

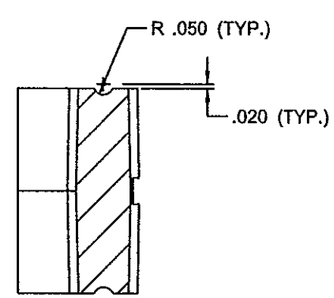

SECTION B-B

REV	DESCRIPTION	DATE	BY
A	REVISED PER MD COMMENTS	2/25/14	RJA

PROJECT # 411-1205

PELLA CORPORATION
102 MAIN STREET
PELLA, IA 50219

TITLE: SERIES 350 4-1/2" VINYL WINDOW MULLIONS - IMPACT
NO. V984416 FLUSH FLANGE FRAME END SPLICE DETAILS

DRAWN BY: RJA
DATE: 03/04/13
SCALE: N.T.S.
DRAWING NO: PELL0033
REV: A
SHEET: 36 OF 36

PREPARED BY:
PTC PRODUCT DESIGN GROUP, LLC
PO BOX 520775
LONGWOOD, FLORIDA 32752
FBPE C.A. NO. 29305
Phone: 321.690.1798
Fax: 321.669.1798
Email: info@ptc-corp.com

Approved as complying with the Florida Building Code
Date April 17, 2014
NOA# 13-0610.03
Miami Dade Product Control
By

Robert J. Amoruso, P.E.
Florida P.E. No. 49752

ROBERT JAMES AMORUSO
LICENSE
No 49752
2/25/14
STATE OF FLORIDA
PROFESSIONAL ENGINEER