MIAMI-DADE COUNTY
PRODUCT CONTROL SECTION
11805 SW 26 Street, Room 208
Miami, Florida 33175-2474
T (786) 315-2590 F (786) 315-2599
www.miamidade.gov/economy

DEPARTMENT OF REGULATORY AND ECONOMIC RESOURCES (RER)
BOARD AND CODE ADMINISTRATION DIVISION

NOTICE OF ACCEPTANCE (NOA)

GlassWall, LLC
3550 N. W. 49 Street
Miami, FL 33142

SCOPE:

This NOA is being issued under the applicable rules and regulations governing the use of construction materials. The documentation submitted has been reviewed and accepted by Miami-Dade County RER -Product Control Section to be used in Miami Dade County and other areas where allowed by the Authority Having Jurisdiction (AHJ).

This NOA shall not be valid after the expiration date stated below. The Miami-Dade County Product Control Section (In Miami Dade County) and/or the AHJ (in areas other than Miami Dade County) reserve the right to have this product or material tested for quality assurance purposes. If this product or material fails to perform in the accepted manner, the manufacturer will incur the expense of such testing and the AHJ may immediately revoke, modify, or suspend the use of such product or material within their jurisdiction. RER reserves the right to revoke this acceptance, if it is determined by Miami-Dade County Product Control Section that this product or material fails to meet the requirements of the applicable building code.

This product is approved as described herein, and has been designed to comply with the Florida Building Code, including the High Velocity Hurricane Zone.

DESCRIPTION: Series "200L" Aluminum Sliding Glass Door w/ wo Head Receptor -L.M.I.

APPROVAL DOCUMENT: Drawing No. **W05-32 Rev G**, titled "Series 200L Alum Sliding Glass Door (L.M.I.)", sheets 1 through 19 of 19, prepared by Al-Farooq Corporation, dated 05/31/05 and last revised on JUN 14, 2013, signed and sealed by Javad Ahmad, P.E., bearing the Miami-Dade County Product Control Revision stamp with the Notice of Acceptance number and expiration date by the Miami-Dade County Product Control Section.

MISSILE IMPACT RATING: Large and Small Missile Impact Resistant

Limitations:

1. See Design Pressure (DP) Vs. Door w/o Head Receptor (HR) & Glass / astragal (interlock) types & Doors w/ HR and head/ sill anchor capacities charts in sheet **7** thru **9**. Lower DP capacities from charts apply to the entire System.
2. Insulated Glass Type C and wood substrate installation is **not** approved with doors w/ Head Receptor.
3. See Sheet 12 for typical fixed panels arrangement. Alum clip at frame head for load above 110 PSF is required.
4. Standalone units with **free** (unanchored) jambs: See Max size, installation & DP in sheets **4** & details in sheet **15**.

LABELING: Each unit shall bear a permanent label with the manufacturer's name or logo, city, state and series and following statement: "Miami-Dade County Product Control Approved", noted herein.

RENEWAL of this NOA shall be considered after a renewal application has been filed and there has been no change in the applicable building code negatively affecting the performance of this product.

TERMINATION of this NOA will occur after the expiration date or if there has been a revision or change in the materials, use, and/or manufacture of the product or process. Misuse of this NOA as an endorsement of any product, for sales, advertising or any other purposes shall automatically terminate this NOA. Failure to comply with any section of this NOA shall be cause for termination and removal of NOA.

ADVERTISEMENT: The NOA number preceded by the words Miami-Dade County, Florida, and followed by the expiration date may be displayed in advertising literature. If any portion of the NOA is displayed, then it shall be done in its entirety.

INSPECTION: A copy of this entire NOA shall be provided to the user by the manufacturer or its distributors and shall be available for inspection at the job site at the request of the Building Official.

This NOA **supersedes & replaces NOA # 12-0821.18** and consists of this page 1 and evidence pages E-1 & E-2, as well as approval document mentioned above.

The submitted documentation was reviewed by **Ishaq I. Chanda, P.E.**

MIAMI-DADE COUNTY APPROVED

6/20/13

GlassWall, LLC

NOTICE OF ACCEPTANCE: EVIDENCE SUBMITTED

A. DRAWINGS

1. Manufacturer's die drawings and sections (Submitted under files below)
2. Drawing No. **W05-32 Rev G**, titled "Series 200L Alum Sliding Glass Door (L.M.I.)", sheets 1 through 19 of 19, prepared by Al-Farooq Corporation, dated 05/31/05 and last revised on JUN 14, 2013, signed and sealed by Javad Ahmad, P.E.

Note: This revision consist of removal of item 5 & 5A as fixed stile.

B. TESTS

1. Test reports on: 1) Large Missile Impact Test per FBC, TAS 201-94
   2) Small Missile Impact Test per FBC, TAS 201-94
   3) Cyclic Wind Pressure Loading per FBC, TAS 203-94

along with marked-up drawings and installation diagram of an insulated laminated aluminum sliding glass door OXXO (sample A-1-SMI and B-1-LMI), prepared by Fenestration Testing Lab., Test Report No. **FTL-6947**, dated 08/03/12, signed and sealed by Marlin D. Brinson, P. E.
Additional Referenced test report # **FTL-6355** dated 11/16/10 per TAS 201, 202 & 203-94 for OXXXXO insulated laminated glass, issued by Fenestration Testing Lab., signed and sealed by Jorge A. Causo, P. E. (Submitted under file # **12-0821.18**)

2. Test reports on: 1) Air Infiltration Test, per FBC, TAS 202–94
   2) Uniform Static Air Pressure Test, Loading per FBC TAS 202–94
   3) Water Resistance Test, per FBC, TAS 202–94
   4) Large Missile Impact Test per FBC, TAS 201–94
   5) Cyclic Wind Pressure Loading per FBC, TAS 203–94
   6) Forced Entry Test, per FBC 2411 3.2.1 (b) and TAS 202–94

along with marked-up drawings and installation diagram of an OXXO aluminum sliding glass door (free jamb-unanchored), prepared by Fenestration Testing, Lab., Test Report No. **FTL-7010**, dated 08/07/12, signed and sealed by Marlin D. Brinson, P. E.

Additional O-X free jamb SGD referenced test report # **09-009A** dated APR 27, 2009 per TAS 201, 202 & 203-94, issued by Construction Testing Corp.

3. Test reports on: 1) Uniform Static Air Pressure Test, Loading per FBC TAS 202–94
   2) Large Missile Impact Test per FBC, TAS 201–94
   3) Cyclic Wind Pressure Loading per FBC, TAS 203–94
   4) Forced Entry Test, per FBC 2411 3.2.1 (b) and TAS 202–94

along with marked–up drawings and installation diagram of an aluminum sliding glass door, prepared by Fenestration Testing Laboratory, Inc., Test Report No. **FTL–5911**, dated 04/16/09, signed and sealed by Michael R. Wenzel, P. E. (Submitted under revision file # **09-0604.23**)

4. Test reports on 1) Air Infiltration Test, per FBC, TAS 202-94
   2) Uniform Static Air Pressure Test, Loading per FBC TAS 202-94
   3) Water Resistance Test, per FBC, TAS 202-94
   4) Large Missile Impact Test per FBC, TAS 201-94
   5) Cyclic Wind Pressure Loading per FBC, TAS 203-94
   6) Forced Entry Test, per FBC 2411 3.2.1 (b) and TAS 202-94

along with marked-up drawings and installation diagram of an aluminum sliding glass door, prepared by Fenestration Testing Laboratory, Inc., Test Report No. **FTL-4002**, dated 12/18/03, signed and sealed by Edmundo Largaespada, P.E. (Submitted under file # **07-0309.11, 04-0316.03 & 04-0702.01)**

Additional Test Report No. # **05-040**, dated Nov. 16, 2005 per TAS 201/203-94, issued by Construction Testing Corp., signed and sealed by Yamil G. Kuri, P.E. (Submitted under file # **04-0316.03 & 04-0702.01**).

Ishaq I. Chanda

Ishaq I. Chanda, P.E.
Product Control Examiner
NOA No. 13-0617.30
Expiration Date: July 08, 2014
Approval Date: June 27, 2013

NOTICE OF ACCEPTANCE: EVIDENCE SUBMITTED

C. CALCULATIONS (Submitted under file # **12-0821.18**)

1. Anchor verification calculations and structural analysis, complying with FBC-2010, prepared by Al Farooq Corporation, dated 01/07/13 and last revised on 02/07/13, signed and sealed by Javad Ahmad, P.E.
2. Glazing complies w/ ASTME-1300-02 & -04

D. QUALITY ASSURANCE

1. Miami Dade Department of Regulatory and Economic Resources (RER).

E. MATERIAL CERTIFICATIONS

1. Notice of Acceptance No. **11-0624.02** issued to E.I. DuPont DeNemours & CO., Inc. for "**DuPont Sentry Glass**", expiring on January 14, 2017.
2. Notice of Acceptance No. **11-1102.09** issued to Solutia, Inc. for "**Saflex CP ™ - Saflex and saflex HP Composite Glass Interlayer w/ PET Core**", expiring on December 11, 2013.

F. STATEMENTS (Submitted under file # **12-0821.18**)

1. Statement letter of conformance to FBC 2010 and letter of no financial interest, prepared by Al Farooq Corporation, dated 01/02/13, signed and sealed by Javad Ahmad, P.E.
2. Lab compliance as part of the above referenced test reports.
3. Statement letter dated JAN 07, 2013, issued by Glasswall for extrusion verification used in the insulated laminated SGD in test report # FTL 6947 & 6355, signed by Federico Balestrazzi, President, Glasswall, LLC.

G. OTHER

1. This NOA **supersedes & replaces NOA # 12-0821.18**, expiring on July 08, 2014.
2. Verification test per RER e-mail dated April 10, 2013 to Glasswall.
3. Test proposals **#11-0972** and test proposal dated 02/25/09 approved by BCCO.
3. Previous associate file are # NOA(s) # **09-0604.23, 04-0316.03, 04-0702.01 & 0703911.**

Ishaq I. Chanda

Ishaq I. Chanda, P.E.
Product Control Examiner
NOA No. 13-0617.30
Expiration Date: July 08, 2014
Approval Date: June 27, 2013

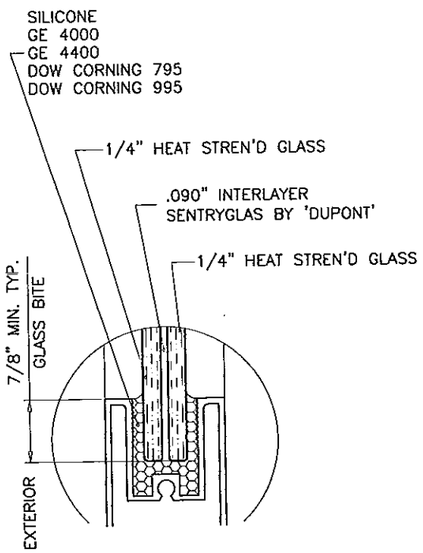

GLASS TYPE 'A'
9/16" OVERALL LAM. GLASS

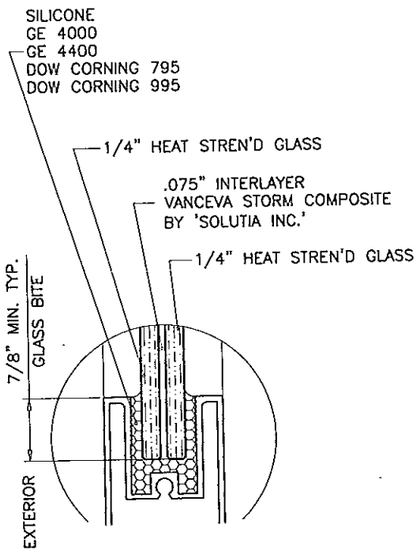

GLASS TYPE 'B'
9/16" OVERALL LAM. GLASS

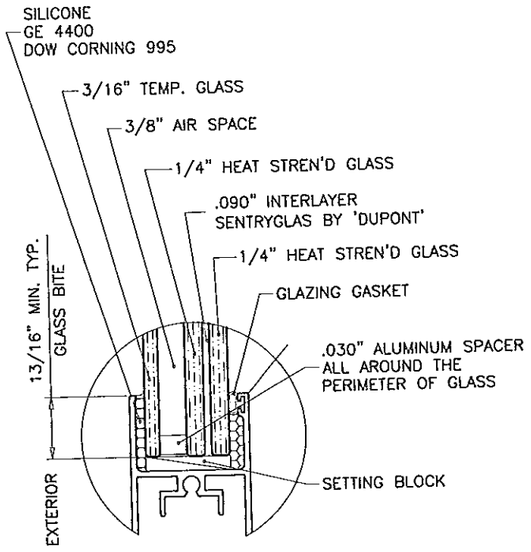

GLASS TYPE 'C'
1-1/8" OVERALL INSUL. LAM. GLASS

GLAZING OPTIONS

THESE DOORS ARE RATED FOR LARGE & SMALL MISSILE IMPACT.
SHUTTERS ARE NOT REQUIRED.

SERIES 200L
ALUMINUM SLIDING GLASS DOOR

DOORS WITHOUT HEAD RECEPTOR SEE SHEET 7 FOR DESIGN LOAD CAPACITY OF GLASS TYPES AND SHEET 8 FOR ANCHORS CAPACITY.

DOORS WITH HEAD RECEPTOR SEE SHEET 9 FOR DESIGN LOAD CAPACITY OF GLASS TYPES AND ANCHORS CAPACITY.

DOORS WITH UNANCHORED JAMBS SEE SHEET 4 FOR DETAILS, LOAD CAPACITIES AND ANCHOR LOCATIONS.

LOWER DESIGN PRESSURES FROM GLASS OR ANCHOR CHARTS WILL APPLY TO ENTIRE SYSTEM.

THIS PRODUCT HAS BEEN DESIGNED AND TESTED TO COMPLY WITH THE REQUIREMENTS OF THE FLORIDA BUILDING CODE INCLUDING HIGH VELOCITY HURRICANE ZONE (HVHZ).

WOOD BUCKS BY OTHERS, MUST BE ANCHORED PROPERLY TO TRANSFER LOADS TO THE STRUCTURE.

ANCHORS SHALL BE AS LISTED, SPACED AS SHOWN ON DETAILS, ANCHORS EMBEDMENT TO BASE MATERIAL SHALL BE BEYOND WALL DRESSING OR STUCCO.

ANCHORING OR LOADING CONDITIONS NOT SHOWN IN THESE DETAILS ARE NOT PART OF THIS APPROVAL.

A LOAD DURATION INCREASE IS USED IN DESIGN OF ANCHORS INTO WOOD ONLY.

MATERIALS INCLUDING BUT NOT LIMITED TO STEEL/METAL SCREWS, THAT COME INTO CONTACT WITH OTHER DISSIMILAR MATERIALS SHALL MEET THE REQUIREMENTS OF THE FLORIDA BLDG. CODE SECTION 2003.8.4.

PRODUCT REVISED
as complying with the Florida
Building Code
Acceptance No 13-0617.30
Expiration Date July 08, 2014
By Iqbal I. Chand
Miami Dade Product Control

LAMINATED GLASS
INSUL. LAM. GLASS
LARGE MISSILE IMPACT

Engr: JAVAD AHMAD
CIVIL
FLA. PE # 70592
C.A.N. 3538

JUN 14 2013

AL-FAROOQ CORPORATION
ENGINEERS & PRODUCT DEVELOPMENT
1235 S.W. 87 AVE
MIAMI, FLORIDA 33174
TEL (305) 264-8100 FAX. (305) 262-6978

COMP-ANL\W05-32GWL

SERIES 200L ALUM SLIDING GLASS DOOR (L.M.I.)

GLASSWALL, LLC
3550 N.W. 49 STREET
MIAMI, FL. 33142
TEL (305) 638-5151 FAX. (305) 638-5158

revisions:

no	date	by	description
C	09.25.09		REV. PER BCOO COMMENTS
D	12.27.12		GENERAL REVISION
E	01.29.13		REV. PER RER COMMENTS
F	02.11.13		NO CHANGES THIS SHEET
G	06.14.13		NO CHANGE THIS SHEET

date: 05-31-05
scale: 1/2" = 1"
dr. by: TARIQ
chk. by:

drawing no.
W05-32

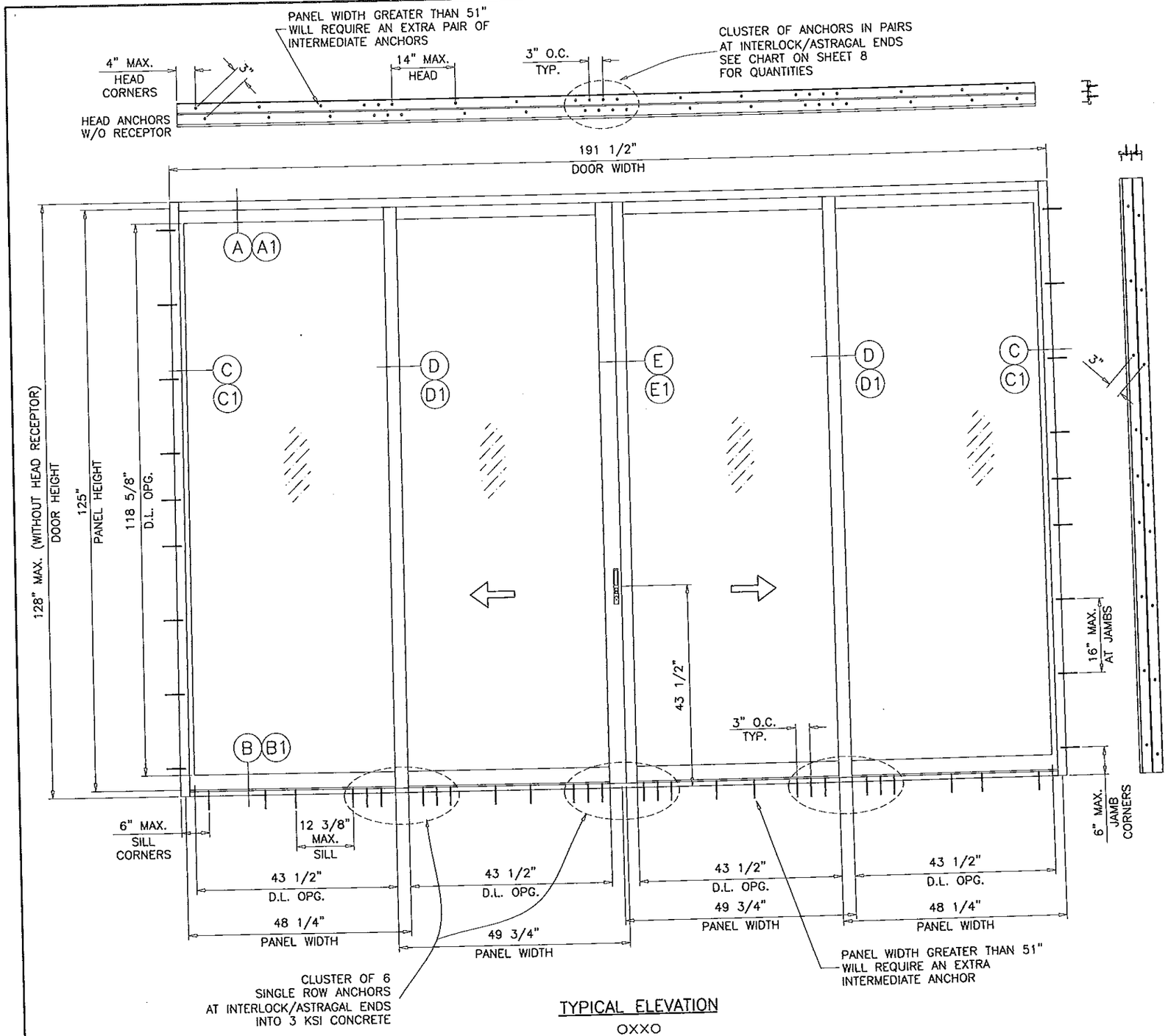

TYPICAL ELEVATION

OXXO

SEE CHARTS 'A' & 'B' ON SHEET 7 FOR GLASS CAPACITY, AND CHARTS ON SHEET 8 FOR HEAD OR SILL ANCHOR CAPACITY LOWER VALUE FROM CHARTS WILL CONTROL.

PRODUCT REVISED
as complying with the Florida Building Code
Acceptance No. 13-0617.30
Expiration Date 7/8/14
By Ishaq I. Chand
Engineer Product Control

DAYLITE OPENINGS WIDTHS:
FIXED STILE–INTERLOCK = PANEL WIDTH – 4.750"
INTERLOCK–LOCK STILE = PANEL WIDTH – 6.250"
INTERLOCK–FEMALE ASTRAGAL = PANEL WIDTH – 6.125
INTERLOCK–MALE ASTRAGAL = PANEL WIDTH – 6"
FIXED STILE–MALE ASTRAGAL = PANEL WIDTH – 5.250"

DAYLITE OPENING HEIGHT:
PANEL HEIGHT – 6.375"

PANEL HEIGHT = DOOR HEIGHT – 3"

Engr: JAVAD AHMAD
CIVIL
FLA. PE # 70592
C.A.N. 3538

JUN 14 2013

AL-FAROOQ CORPORATION
ENGINEERS & PRODUCT DEVELOPMENT
1235 S.W. 87 AVE
MIAMI, FLORIDA 33174
TEL. (305) 264-8100 FAX. (305) 262-6978
COMP-ANL\W05-32GWL

SERIES 200L ALUM SLIDING GLASS DOOR (L.M.I.)

GLASSWALL, LLC
3550 N.W. 49 STREET
MIAMI, FL. 33142
TEL. (305) 638-5151 FAX. (305) 638-5158

revisions:

no	date	by	description
C	09.25.09		REV. PER BCCO COMMENTS
D	12.27.12		GENERAL REVISION
E	01.29.13		REV. PER RER COMMENTS
F	02.11.13		NO CHANGES THIS SHEET
G	06.14.13		NO CHANGE THIS SHEET

date: 05-31-05
scale: 1/2"=1'-0"
dr. by: TARIQ
chk. by:

drawing no. W05-32

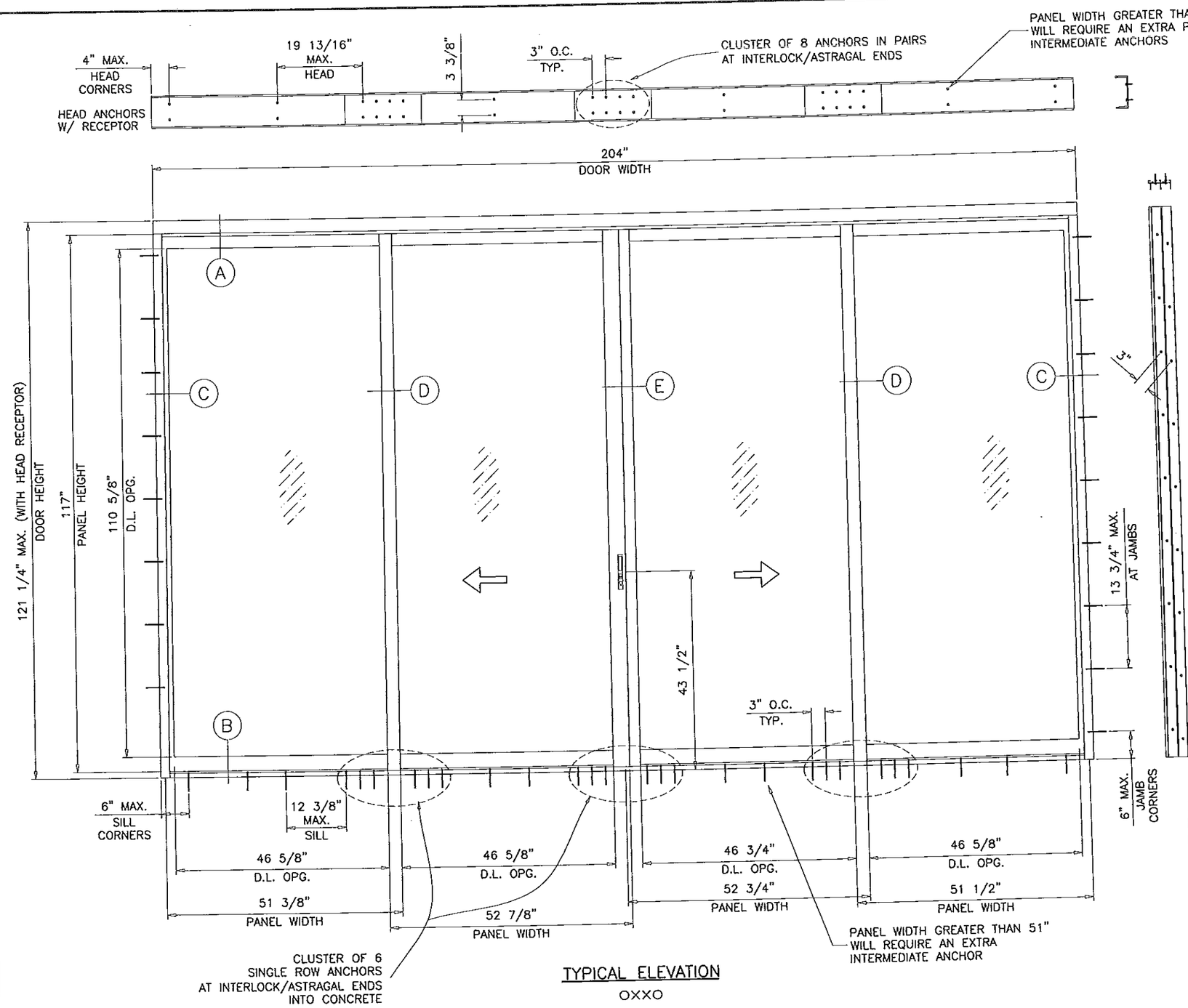

TYPICAL ELEVATION

OXXO

SEE CHART 'C' ON SHEET 9 FOR GLASS CAPACITY,
AND HEAD OR SILL ANCHOR CAPACITY
LOWER VALUE FROM CHARTS WILL CONTROL.

PRODUCT REVISED
as complying with the Florida
Building Code
Acceptance No. 13-0617.30
Expiration Date 7/8/14
By Ishaq I. Ghauri
Miami-Dade Product Control

DAYLITE OPENINGS WIDTHS:
FIXED STILE–INTERLOCK = PANEL WIDTH – 4.750"
INTERLOCK–LOCK STILE = PANEL WIDTH – 6.250"
INTERLOCK–FEMALE ASTRAGAL = PANEL WIDTH – 6.125
INTERLOCK–MALE ASTRAGAL = PANEL WIDTH – 6"
FIXED STILE–MALE ASTRAGAL = PANEL WIDTH – 5.250"

DAYLITE OPENING HEIGHT:
PANEL HEIGHT – 6.375"

PANEL HEIGHT = DOOR HEIGHT – 4 1/4"

Engr: JAVAD AHMAD
CIVIL
FLA. PE # 70592
C.A.N. 3538

JUN 14 2013

AL-FAROOQ CORPORATION
ENGINEERS & PRODUCT DEVELOPMENT
1235 S.W. 87 AVE
MIAMI, FLORIDA 33174
TEL. (305) 264-8100 FAX. (305) 262-6978
COMP-ANL\W05-32GWL

SERIES 200L ALUM SLIDING GLASS DOOR (L.M.I.)

GLASSWALL, LLC
3550 N.W. 49 STREET
MIAMI, FL. 33142
TEL. (305) 638-5151 FAX. (305) 638-5158

revisions:			
no	date	by	description
C	09.25.09		REV. PER BCCO COMMENTS
D	12.27.12		GENERAL REVISION
E	01.29.13		REV. PER RER COMMENTS
F	02.11.13		NO CHANGES THIS SHEET
G	06.14.13		NO CHANGE THIS SHEET

date: 05-31-05
scale: 1/2"=1'-0"
dr. by: TARIQ
chk. by:

drawing no.
W05-32

sheet 3 of 19

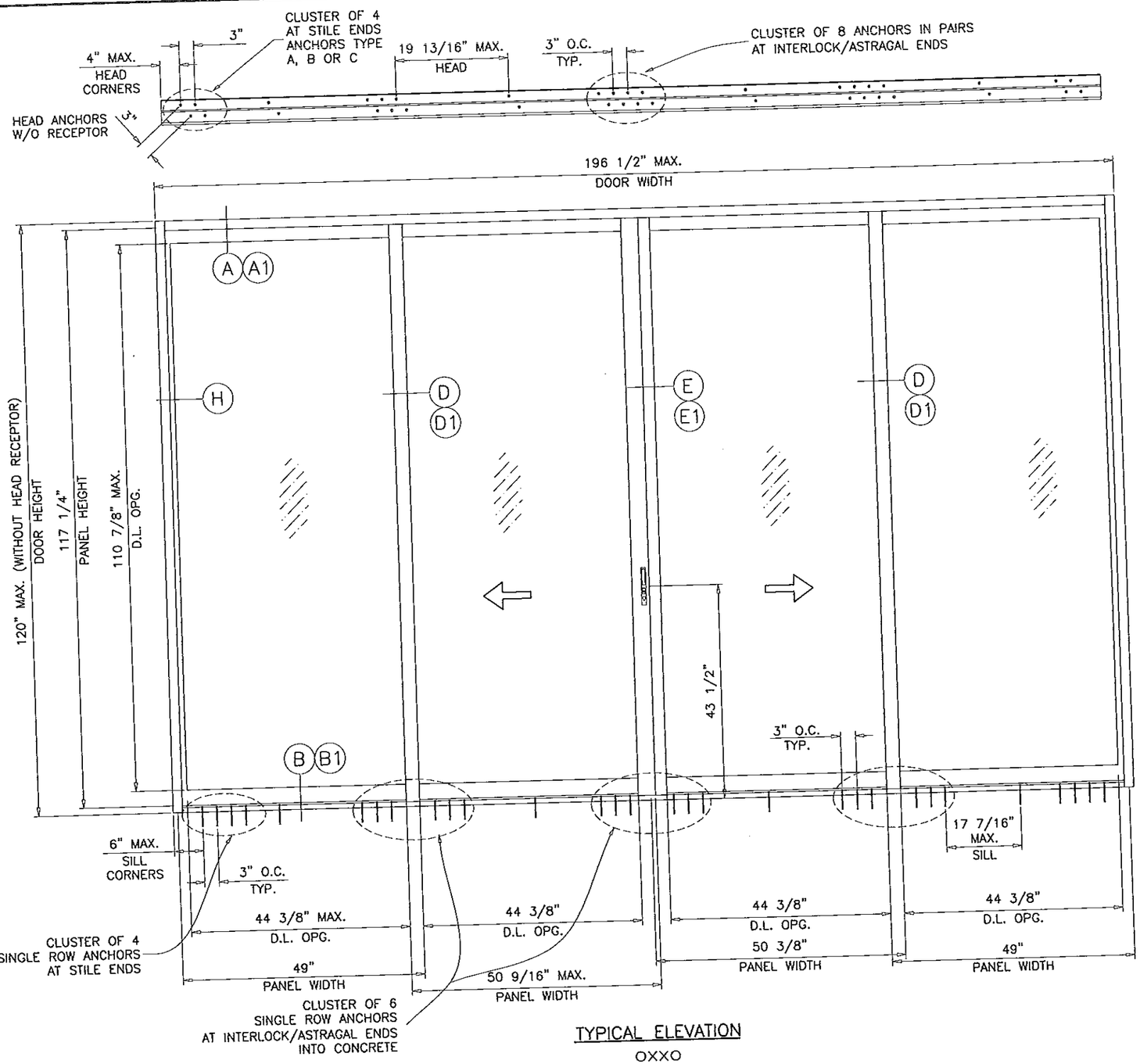

TYPICAL ELEVATION
OXXO

MAX. SIZE SHOWN (ALL SMALLER SIZES PERMITTED PER FBC)
USES THE SAME ANCHORS PATTERN AS SHOWN IN THIS ELEVATION
1/2" MAX. SHIM SPACE AT HEAD

FOR OPERABLE JAMBS LIMIT LOADS TO ±72.1 PSF

PRODUCT REVISED
as complying with the Florida Building Code
Acceptance No 13-0617.30
Expiration Date 7/5/14
By Miami Dade Product Control

DAYLITE OPENINGS WIDTHS:
FIXED STILE–INTERLOCK = PANEL WIDTH – 4.750"
INTERLOCK–LOCK STILE = PANEL WIDTH – 6.250"
INTERLOCK–FEMALE ASTRAGAL = PANEL WIDTH – 6.125
INTERLOCK–MALE ASTRAGAL = PANEL WIDTH – 6"
FIXED STILE–MALE ASTRAGAL = PANEL WIDTH – 5.250"

DAYLITE OPENING HEIGHT:
PANEL HEIGHT – 6.375"

PANEL HEIGHT = DOOR HEIGHT – 3"

LIMIT MAX. LOADS FOR FOR DOORS WITH
FREE STANDING (UNANCHORED) JAMBS AS FOLLOWS.
(OXO) AND (OXXO) CONFIGURATIONS = ±75.0 PSF
ALL OTHER CONFIGURATIONS = ±72.1 PSF
(SEE SHEET 15)

Engr: JAVAD AHMAD
CIVIL
FLA. PE # 70592
C.A.N. 3538
JUN 14 2013

AL-FAROOQ CORPORATION
ENGINEERS & PRODUCT DEVELOPMENT
1235 S.W. 87 AVE
MIAMI, FLORIDA 33174
TEL. (305) 264-8100 FAX. (305) 262-6978

COMP-ANL\W05-32GWL

SERIES 200L ALUM SLIDING GLASS DOOR (L.M.I.)

GLASSWALL, LLC
3550 N.W. 49 STREET
MIAMI, FL. 33142
TEL. (305) 638-5158 FAX. (305) 638-5151

revisions: no	date	by	description
C	09.25.09		REV. PER BCCO COMMENTS
D	12.27.12		GENERAL REVISION
E	01.29.13		REV. PER RER COMMENTS
F	02.11.13		NO CHANGES THIS SHEET
G	06.14.13		NO CHANGE THIS SHEET

date: 05-31-05
scale: 1/2"=1'-0"
dr. by: TARIQ
chk. by:

drawing no.
W05-32

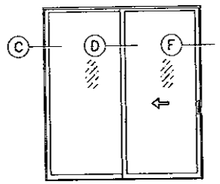

OX (SHOWN)
XO

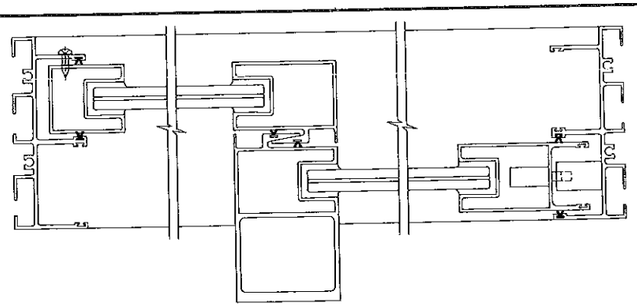

NOTE:
CONFIGURATIONS SHOWN FOR ILLUSTRATION PURPOSE ONLY
(SEE APPLICABLE DESIGN PRESSURE IN SHEET 7
AND ANCHOR INSTALLATIONS ON SHEETS 10 THRU 14)

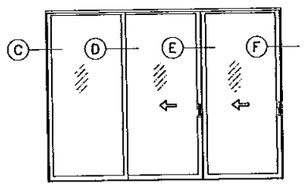

OXX (SHOWN)
XXO

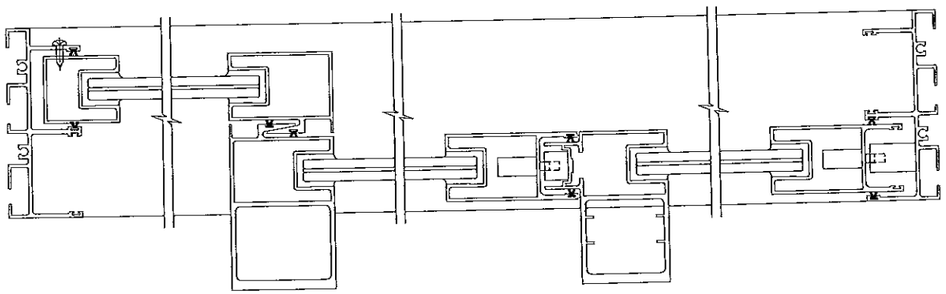

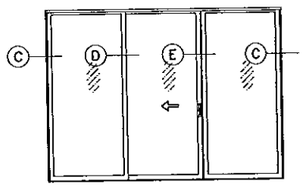

OXO

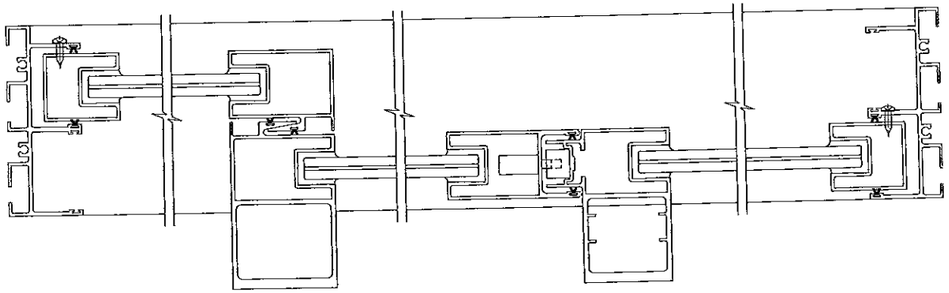

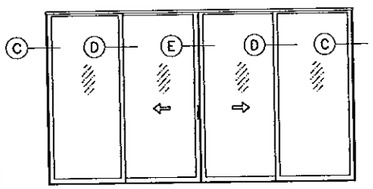

OXXO

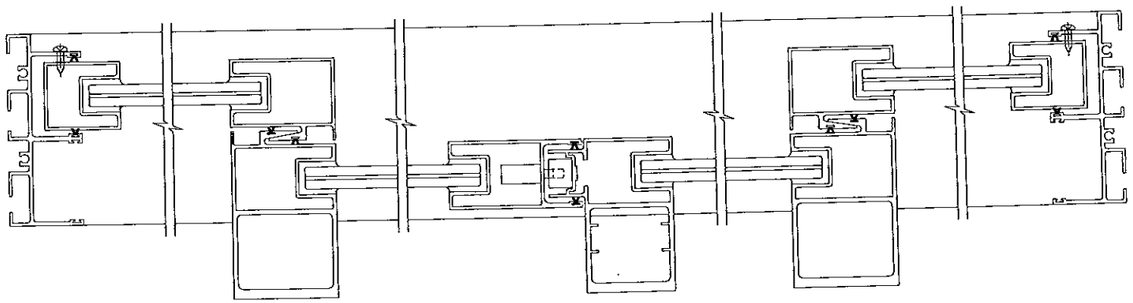

APPROVED CONFIGURATIONS
WITH GLASS TYPES 'A' & 'B'

PRODUCT REVISED
as complying with the Florida Building Code
Acceptance No 13-0612.30
Expiration Date 7/6/14
By [signature]
Miami-Dade Product Control

Engr: JAVAD AHMAD
CIVIL
FLA. PE # 70592
C.A.N. 3538

JUN 14 2013

AL-FAROOQ CORPORATION
ENGINEERS & PRODUCT DEVELOPMENT
1235 S.W. 87 AVE
MIAMI, FLORIDA 33174
TEL. (305) 264-8100 FAX. (305) 262-6978
COMP-ANL\W05-32GWL

SERIES 200L ALUM SLIDING GLASS DOOR (L.M.I.)

GLASSWALL, LLC
3550 N.W. 49 STREET
MIAMI, FL. 33142
TEL. (305) 638-5151 FAX. (305) 638-5158

revisions:

no	date	by	description
C	09.25.09		REV. PER BCCO COMMENTS
D	12.27.12		GENERAL REVISION
E	01.29.13		REV. PER RER COMMENTS
F	02.11.13		DETAILS CORRECTED
G	06.14.13		NO CHANGE THIS SHEET

date: 05-31-05
scale: 1/2"=1'-0"
dr. by: TARIQ
chk. by:

drawing no.
W05-32

sheet 5 of 19

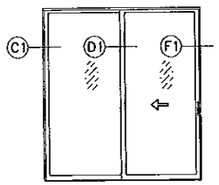

OX (SHOWN)
XO

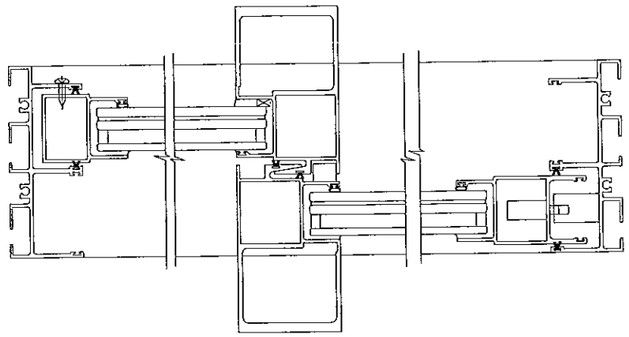

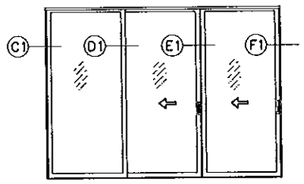

OXX (SHOWN)
XXO

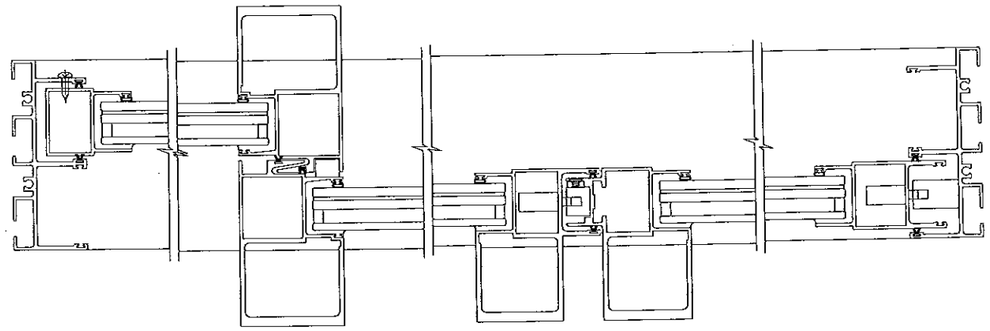

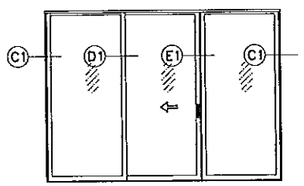

OXO

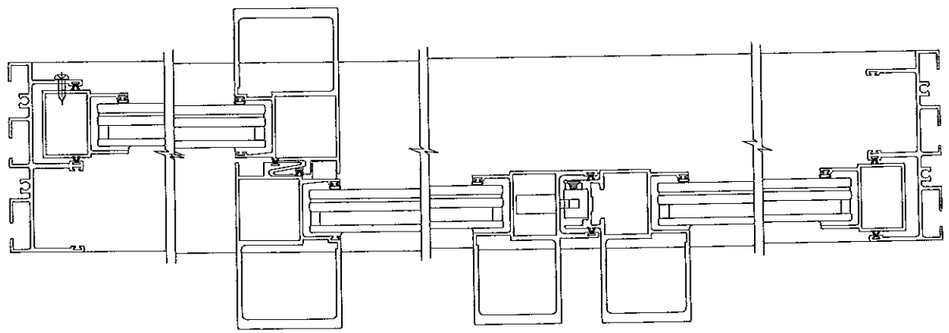

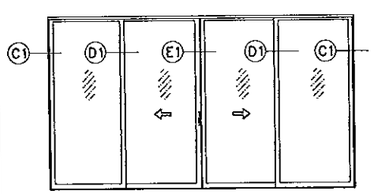

OXXO

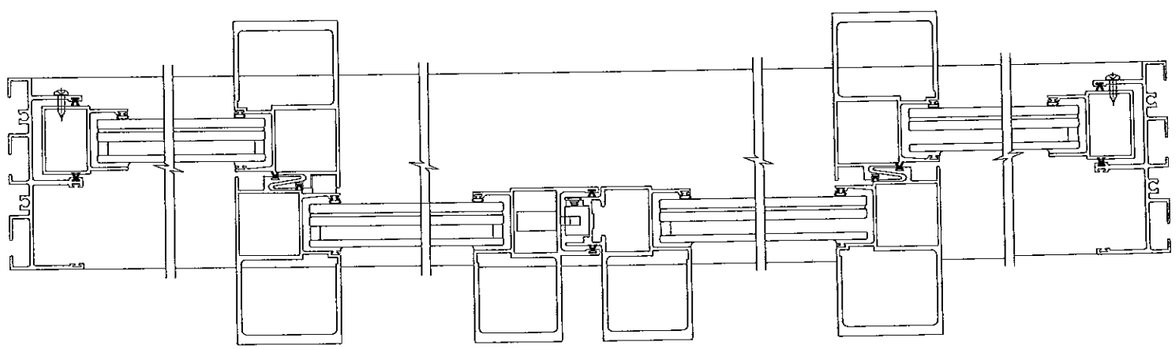

APPROVED CONFIGURATIONS
WITH GLASS TYPES 'C'

NOTE:
CONFIGURATIONS SHOWN FOR ILLUSTRATION PURPOSE ONLY
(SEE APPLICABLE DESIGN PRESSURE IN SHEET 7
AND ANCHOR INSTALLATIONS ON SHEETS 10 THRU 14)

PRODUCT REVISED
as complying with the Florida
Building Code
Acceptance No 13-0617.30
Expiration Date 7/8/14
By Ishag I. Lanak
Miami Dade Product Control

Engr: JAVAD AHMAD
CIVIL
FLA. PE # 70592
C.A.N. 3538

JUN 14 2013

AL-FAROOQ CORPORATION
ENGINEERS & PRODUCT DEVELOPMENT
1235 S.W. 87 AVE
MIAMI, FLORIDA 33174
TEL. (305) 264-8100 FAX. (305) 262-6978

COMP-ANL\W05-32GWL

SERIES 200L ALUM SLIDING GLASS DOOR (L.M.I.)

GLASSWALL, LLC
3550 N.W. 49 STREET
MIAMI, FL. 33142
TEL. (305) 638-5151 FAX. (305) 638-5158

revisions:

no	date	by	description
C	09.25.09		REV. PER BCCO COMMENTS
D	12.27.12		GENERAL REVISION
E	01.29.13		REV. PER RER COMMENTS
F	02.11.13		DETAILS CORRECTED
G	06.14.13		NO CHANGE THIS SHEET

date: 05-31-05
scale: 1/2"=1'-0"
dr. by: TARIQ
chk. by:

drawing no.
W05-32

CHART 'A'

DESIGN LOAD CAPACITY – PSF
DOORS WITHOUT HEAD RECEPTOR
STD. INTERLOCK AND ASTRAGAL

PANEL WIDTH NOMINAL INCHES	DOOR HEIGHT INCHES	GLASS TYPE 'A'		GLASS TYPE 'B'	
		EXT.(+)	INT.(–)	EXT.(+)	INT.(–)
30	80	110.0	110.0	90.0	90.0
36		110.0	110.0	90.0	90.0
42		110.0	110.0	90.0	90.0
48		110.0	110.0	90.0	90.0
54		110.0	110.0	90.0	90.0
60		110.0	110.0	–	–
30	84	110.0	110.0	90.0	90.0
36		110.0	110.0	90.0	90.0
42		110.0	110.0	90.0	90.0
48		110.0	110.0	90.0	90.0
54		110.0	110.0	–	–
60		110.0	110.0	–	–
30	90	110.0	110.0	90.0	90.0
36		110.0	110.0	90.0	90.0
42		110.0	110.0	90.0	90.0
48		110.0	110.0	90.0	90.0
54		110.0	110.0	–	–
60		110.0	110.0	–	–
30	96	110.0	110.0	90.0	90.0
36		110.0	110.0	90.0	90.0
42		110.0	110.0	90.0	90.0
48		110.0	110.0	–	–
54		110.0	110.0	–	–
60		110.0	110.0	–	–
30	102	110.0	110.0	90.0	90.0
36		110.0	110.0	90.0	90.0
42		110.0	110.0	90.0	90.0
48		110.0	110.0	–	–
54		110.0	110.0	–	–
60		110.0	110.0	–	–
30	108	110.0	110.0	90.0	90.0
36		110.0	110.0	90.0	90.0
42		110.0	110.0	–	–
48		110.0	110.0	–	–
54		110.0	110.0	–	–
30	114	110.0	110.0	90.0	90.0
36		110.0	110.0	90.0	90.0
42		110.0	110.0	–	–
48		110.0	110.0	–	–
30	120	110.0	110.0	90.0	90.0
36		110.0	110.0	90.0	90.0
42		110.0	110.0	–	–
48		110.0	110.0	–	–
51		110.0	110.0	–	–
30	126	90.0	90.0	–	–
36		90.0	90.0	–	–
42		90.0	90.0	–	–
48		90.0	90.0	–	–
30	128	90.0	90.0	–	–
36		90.0	90.0	–	–
42		90.0	90.0	–	–
47-3/4		90.0	90.0	–	–

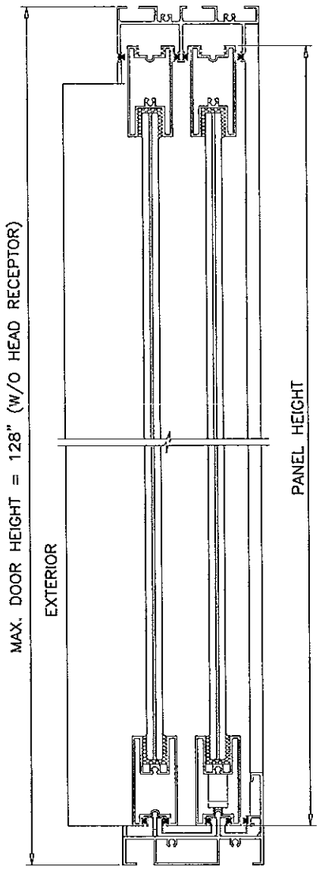

PANEL HEIGHT = DOOR HEIGHT – 3"

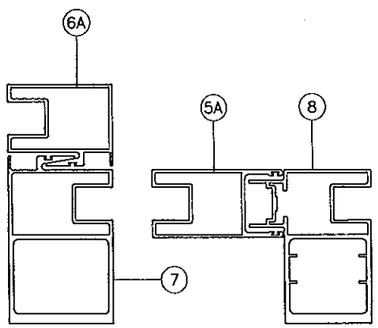

STD. INTERLOCK AND ASTRAGAL

NOTE:
GLASS CAPACITIES ON THIS SHEET ARE BASED ON ASTM E1300-04 (3 SEC. GUSTS) AND FLORIDA BUILDING COMMISSION DECLARATORY STATEMENT DCA05-DEC-219

CHART 'B'

DESIGN LOAD CAPACITY – PSF
DOORS WITHOUT HEAD RECEPTOR
H.D. INTERLOCK AND ASTRAGAL

PANEL WIDTH NOMINAL INCHES	DOOR HEIGHT INCHES	GLASS TYPE 'A'		GLASS TYPE 'C'	
		EXT.(+)	INT.(–)	EXT.(+)	INT.(–)
30	80	110.0	135.0	110.0	135.0
36		110.0	135.0	110.0	135.0
42		110.0	135.0	110.0	135.0
48		110.0	135.0	110.0	135.0
54		110.0	135.0	110.0	135.0
60		110.0	135.0	110.0	135.0
30	84	110.0	135.0	110.0	135.0
36		110.0	135.0	110.0	135.0
42		110.0	135.0	110.0	135.0
48		110.0	135.0	110.0	135.0
54		110.0	135.0	110.0	135.0
60		110.0	135.0	110.0	135.0
30	90	110.0	135.0	110.0	135.0
36		110.0	135.0	110.0	135.0
42		110.0	135.0	110.0	135.0
48		110.0	135.0	110.0	135.0
54		110.0	131.7	110.0	131.7
60		110.0	124.4	110.0	124.4
30	96	110.0	135.0	110.0	135.0
36		110.0	135.0	110.0	135.0
42		110.0	135.0	110.0	135.0
48		110.0	129.6	110.0	129.6
54		110.0	120.2	110.0	120.2
60		110.0	113.1	110.0	113.1
30	102	110.0	135.0	110.0	135.0
36		110.0	135.0	110.0	135.0
42		110.0	131.7	110.0	131.7
48		110.0	119.6	110.0	119.6
54		110.0	110.6	110.0	110.6
60		110.0	103.7	110.0	103.7
30	108	110.0	135.0	110.0	135.0
36		110.0	135.0	110.0	135.0
42		110.0	122.6	110.0	122.6
48		110.0	111.1	110.0	111.1
54		110.0	110.0	110.0	110.0
30	114	110.0	135.0	110.0	135.0
36		110.0	129.6	110.0	129.6
42		110.0	114.7	110.0	114.7
48		110.0	110.0	110.0	110.0
30	120	110.0	135.0	110.0	135.0
36		110.0	122.0	110.0	122.0
42		110.0	110.0	107.7	107.7
48		110.0	110.0	97.2	97.2
51		110.0	110.0	–	–
30	126	90.0	90.0	–	–
36		90.0	90.0	–	–
42		90.0	90.0	–	–
48		90.0	90.0	–	–
30	128	90.0	90.0	–	–
36		90.0	90.0	–	–
42		90.0	90.0	–	–
47-3/4		90.0	90.0	–	–

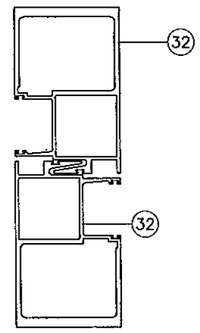

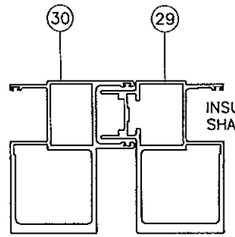

INSUL. LAM. GLASS SHAPES

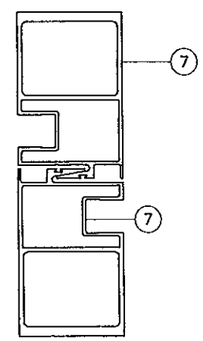

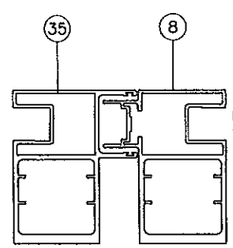

LAMINATED GLASS SHAPES

H.D. INTERLOCK AND ASTRAGAL

PRODUCT REVISED
as complying with the Florida Building Code
Acceptance No. 13-0617.36
Expiration Date 7/6/14
By
Miami Dade Product Control

Engr: JAVAD AHMAD
CIVIL
FLA. PE # 70592
C.A.N. 3538

JUN 14 2013

AL-FAROOQ CORPORATION
ENGINEERS & PRODUCT DEVELOPMENT
1235 S.W. 87 AVE
MIAMI, FLORIDA 33174
TEL. (305) 264-8100 FAX. (305) 262-6978

COMP-ANL\W05-32GWL

SERIES 200L ALUM SLIDING GLASS DOOR (L.M.I.)

GLASSWALL, LLC
3550 N.W. 49 STREET
MIAMI, FL. 33142
TEL. (305) 638-5151 FAX. (305) 638-5158

revisions:

no	date	by	description
C	09.25.09		NO CHANGE THIS SHEET
D	12.27.12		GENERAL REVISION
E	01.29.13		REV. PER RER COMMENTS
F	02.11.13		NO CHANGES THIS SHEET
G	06.14.13		NO CHANGE THIS SHEET

date: 05-31-05
scale: 1/2" = 1"
dr. by: TARIQ
chk. by:

drawing no.
W05-32

sheet 7 of 19

HEAD ANCHOR LOAD CAPACITY – PSF
(DOORS WITHOUT HEAD RECEPTOR)

PANEL WIDTH NOMINAL INCHES	DOOR HEIGHT INCHES	ANCHORS TYPE 'A' 1/2" SHIM SPACE 6 ANCHORS AT MTG. STILE ENDS EXT. (+) INT. (–)	ANCHORS TYPE 'A' 1/2" SHIM SPACE 8 ANCHORS AT MTG. STILE ENDS EXT. (+) INT. (–)	ANCHORS TYPE 'A' 3/8" SHIM 6 ANCHORS AT MTG. STILE ENDS EXT. (+) INT. (–)	ANCHORS TYPE 'B' 1/2" SHIM SPACE 6 ANCHORS AT MTG. STILE ENDS EXT. (+) INT. (–)	ANCHORS TYPE 'B' 1/2" SHIM SPACE 8 ANCHORS AT MTG. STILE ENDS EXT. (+) INT. (–)	ANCHORS TYPE 'B' 3/8" SHIM 6 ANCHORS AT MTG. STILE ENDS EXT. (+) INT. (–)	ANCHORS 'C' 1/4" SHIM 6 ANCHORS AT MTG. STILE ENDS EXT. (+) INT. (–)
30	80	135.0	135.0	135.0	135.0	135.0	135.0	135.0
36		135.0	135.0	135.0	135.0	135.0	135.0	135.0
42		135.0	135.0	135.0	135.0	135.0	135.0	135.0
48		135.0	135.0	135.0	135.0	135.0	135.0	135.0
54		135.0	135.0	135.0	135.0	135.0	135.0	135.0
60		135.0	135.0	135.0	135.0	135.0	135.0	135.0
30	84	135.0	135.0	135.0	135.0	135.0	135.0	135.0
36		135.0	135.0	135.0	135.0	135.0	135.0	135.0
42		135.0	135.0	135.0	135.0	135.0	135.0	135.0
48		135.0	135.0	135.0	135.0	135.0	135.0	135.0
54		132.5	135.0	135.0	132.5	135.0	135.0	135.0
60		125.9	135.0	135.0	125.9	135.0	135.0	135.0
30	90	135.0	135.0	135.0	135.0	135.0	135.0	135.0
36		135.0	135.0	135.0	135.0	135.0	135.0	135.0
42		135.0	135.0	135.0	135.0	135.0	135.0	135.0
48		128.7	135.0	135.0	128.7	135.0	135.0	135.0
54		119.9	135.0	135.0	119.9	135.0	135.0	135.0
60		113.3	135.0	135.0	113.3	135.0	128.6	135.0
30	96	135.0	135.0	135.0	135.0	135.0	135.0	135.0
36		135.0	135.0	135.0	135.0	135.0	135.0	135.0
42		129.5	135.0	135.0	129.5	135.0	135.0	135.0
48		118.0	135.0	135.0	118.0	135.0	134.0	135.0
54		109.4	135.0	134.5	109.4	135.0	124.3	135.0
60		103.0	135.0	126.5	103.0	135.0	116.9	130.0
30	102	135.0	135.0	135.0	135.0	135.0	135.0	135.0
36		134.9	135.0	135.0	134.9	135.0	135.0	135.0
42		119.9	135.0	135.0	119.9	135.0	135.0	135.0
48		108.9	135.0	133.8	108.9	135.0	123.7	132.0
54		100.7	134.3	123.7	100.7	134.3	114.3	127.1
60		94.4	125.9	116.0	94.4	125.9	107.2	119.2
30	108	135.0	135.0	135.0	135.0	135.0	135.0	135.0
36		125.9	135.0	135.0	125.9	135.0	135.0	135.0
42		111.6	135.0	135.0	111.6	135.0	126.7	135.0
48		101.1	135.0	124.3	101.1	134.9	114.9	135.0
54		93.2	124.3	114.6	93.2	124.3	105.9	127.5
30	114	135.0	135.0	135.0	135.0	135.0	135.0	135.0
36		118.0	135.0	135.0	118.0	135.0	134.0	135.0
42		104.4	135.0	128.3	104.4	135.0	118.6	131.8
48		94.4	125.9	116.0	94.4	125.9	107.2	119.2
30	120	129.5	135.0	135.0	129.5	135.0	135.0	135.0
36		111.1	135.0	135.0	111.1	135.0	126.1	135.0
42		98.1	130.8	120.5	98.1	130.8	111.4	123.8
48		88.5	118.0	108.8	88.5	118.0	100.5	111.8
51		84.6	112.8	104.0	84.6	112.8	96.1	106.8
30	126	90.0	90.0	90.0	90.0	90.0	90.0	90.0
36		90.0	90.0	90.0	90.0	90.0	90.0	90.0
42		90.0	90.0	90.0	90.0	90.0	90.0	90.0
48		85.4	90.0	90.0	83.3	90.0	90.0	90.0
30	128	90.0	90.0	90.0	90.0	90.0	90.0	90.0
36		90.0	90.0	90.0	90.0	90.0	90.0	90.0
42		90.0	90.0	90.0	90.0	90.0	90.0	90.0
47-3/4"		82.0	90.0	90.0	82.0	90.0	90.0	90.0

SILL ANCHOR LOAD CAPACITY – PSF
(DOORS WITHOUT HEAD RECEPTOR)

PANEL WIDTH NOMINAL INCHES	DOOR HEIGHT INCHES	ANCHORS TYPE 'A' 1/4" SHIM SPACE OR 1/2" POURED & HARDENED GROUT 6 ANCHORS AT STILE ENDS EXT. (+) INT. (–)
30	80	135.0
36		135.0
42		135.0
48		135.0
54		135.0
60		135.0
30	84	135.0
36		135.0
42		135.0
48		135.0
54		135.0
60		135.0
30	90	135.0
36		135.0
42		135.0
48		135.0
54		135.0
60		135.0
30	96	135.0
36		135.0
42		135.0
48		135.0
54		135.0
60		135.0
30	102	135.0
36		135.0
42		135.0
48		135.0
54		135.0
60		135.0
30	108	135.0
36		135.0
42		135.0
48		135.0
54		135.0
30	114	135.0
36		135.0
42		135.0
48		135.0
30	120	135.0
36		135.0
42		135.0
48		135.0
51		135.0
30	126	90.0
36		90.0
42		90.0
48		90.0
30	128	90.0
36		90.0
42		90.0
47-3/4"		90.0

PRODUCT REVISED
as complying with the Florida Building Code
Acceptance No. 13-0617.30
Expiration Date 7/9/14
By Ishaq Lakhani
Miami Dade Product Control

Engr: JAVAD AHMAD
CIVIL
FLA. PE # 70592
C.A.N. 3538

JUN 14 2013

AL-FAROOQ CORPORATION
ENGINEERS & PRODUCT DEVELOPMENT
1235 S.W. 87 AVE
MIAMI, FLORIDA 33174
TEL. (305) 264-8100 FAX. (305) 262-6978

COMP-ANL\W05-32GWL

SERIES 200L ALUM SLIDING GLASS DOOR (L.M.I.)

GLASSWALL, LLC
3550 N.W. 49 STREET
MIAMI, FL. 33142
TEL. (305) 638-5151 FAX. (305) 638-5158

revisions:

no	date	by	description
C	09.25.09		REV. PER BCCO COMMENTS
D	12.27.12		GENERAL REVISION
E	01.29.13		REV. PER RER COMMENTS
F	02.11.13		NO CHANGES THIS SHEET
G	06.14.13		NO CHANGE THIS SHEET

date: 05-31-05
scale: 1/2" = 1"
dr. by: TARIQ
chk. by:

drawing no.
W05-32

sheet 8 of 19

CHART 'C'

DESIGN LOAD CAPACITY – PSF DOORS WITH HEAD RECEPTOR STD. INTERLOCK AND ASTRAGAL					
PANEL WIDTH NOMINAL INCHES	DOOR HEIGHT INCHES	GLASS TYPE 'A'		GLASS TYPE 'B'	
		EXT.(+)	INT.(–)	EXT.(+)	INT.(–)
30	81 1/4	110.0	110.0	90.0	90.0
36		110.0	110.0	90.0	90.0
42		110.0	110.0	90.0	90.0
48		110.0	110.0	90.0	90.0
54		110.0	110.0	90.0	90.0
60		110.0	110.0	–	–
30	85 1/4	110.0	110.0	90.0	90.0
36		110.0	110.0	90.0	90.0
42		110.0	110.0	90.0	90.0
48		110.0	110.0	90.0	90.0
54		110.0	110.0	–	–
60		110.0	110.0	–	–
30	91 1/4	110.0	110.0	90.0	90.0
36		110.0	110.0	90.0	90.0
42		110.0	110.0	90.0	90.0
48		110.0	110.0	90.0	90.0
54		110.0	110.0	–	–
60		110.0	110.0	–	–
30	97 1/4	110.0	110.0	90.0	90.0
36		110.0	110.0	90.0	90.0
42		110.0	110.0	90.0	90.0
48		110.0	110.0	–	–
54		110.0	110.0	–	–
60		110.0	110.0	–	–
30	103 1/4	110.0	110.0	90.0	90.0
36		110.0	110.0	90.0	90.0
42		110.0	110.0	90.0	90.0
48		110.0	110.0	–	–
54		110.0	110.0	–	–
60		110.0	110.0	–	–
30	109 1/4	110.0	110.0	90.0	90.0
36		110.0	110.0	90.0	90.0
42		110.0	110.0	–	–
48		110.0	110.0	–	–
54		110.0	110.0	–	–
30	115 1/4	110.0	110.0	90.0	90.0
36		110.0	110.0	90.0	90.0
42		110.0	110.0	–	–
48		110.0	110.0	–	–
30	121 1/4	110.0	110.0	90.0	90.0
36		110.0	110.0	90.0	90.0
42		110.0	110.0	–	–
48		110.0	110.0	–	–
51		110.0	110.0	–	–

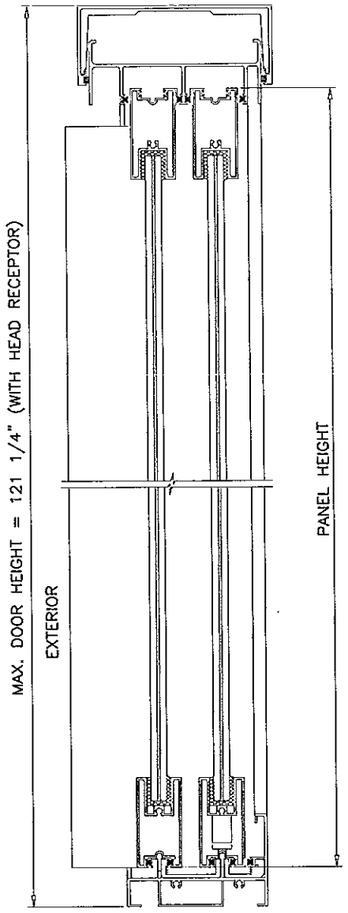

PANEL HEIGHT = DOOR HEIGHT – 4-1/4"

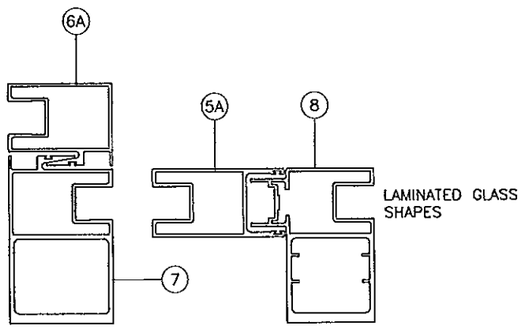

STD. INTERLOCK AND ASTRAGAL

HEAD ANCHOR LOAD CAPACITY – PSF (DOORS WITH HEAD RECEPTOR)		
		ANCHORS TYPE 'A' & 'C'
		1/4" SHIM SPACE
		8 ANCHORS AT MTG. STILE ENDS
PANEL WIDTH NOMINAL INCHES	DOOR HEIGHT INCHES	EXT. (+) INT. (–)
30	81 1/4	110.0
36		110.0
42		110.0
48		110.0
54		110.0
60		110.0
30	85 1/4	110.0
36		110.0
42		110.0
48		110.0
54		110.0
60		110.0
30	91 1/4	110.0
36		110.0
42		110.0
48		110.0
54		110.0
60		110.0
30	97 1/4	110.0
36		110.0
42		110.0
48		110.0
54		110.0
60		110.0
30	103 1/4	110.0
36		110.0
42		110.0
48		110.0
54		110.0
60		110.0
30	109 1/4	110.0
36		110.0
42		110.0
48		110.0
54		110.0
30	115 1/4	110.0
36		110.0
42		110.0
48		110.0
30	121 1/4	110.0
36		110.0
42		110.0
48		110.0
54		110.0
60		110.0
51		110.0

SILL ANCHOR LOAD CAPACITY – PSF (DOORS WITH HEAD RECEPTOR)		
		ANCHORS TYPE 'A'
		1/4" SHIM SPACE OR 1/2" POURED & HARDENED GROUT
		6 ANCHORS AT STILE ENDS
PANEL WIDTH NOMINAL INCHES	DOOR HEIGHT INCHES	EXT. (+) INT. (–)
30	81 1/4	110.0
36		110.0
42		110.0
48		110.0
54		110.0
60		110.0
30	85 1/4	110.0
36		110.0
42		110.0
48		110.0
54		110.0
60		110.0
30	91 1/4	110.0
36		110.0
42		110.0
48		110.0
54		110.0
60		110.0
30	97 1/4	110.0
36		110.0
42		110.0
48		110.0
54		110.0
60		110.0
30	103 1/4	110.0
36		110.0
42		110.0
48		110.0
54		110.0
60		110.0
30	109 1/4	110.0
36		110.0
42		110.0
48		110.0
54		110.0
30	115 1/4	110.0
36		110.0
42		110.0
48		110.0
30	121 1/4	110.0
36		110.0
42		110.0
48		110.0
51		110.0

PRODUCT REVISED
as complying with the Florida Building Code
Acceptance No 18-0617.30
Expiration Date 7/9/14
By Shaq I. Chaudhry
Miami Dade Product Control

NOTE:
GLASS CAPACITIES ON THIS SHEET ARE BASED ON ASTM E1300-04 (3 SEC. GUSTS) AND FLORIDA BUILDING COMMISSION DECLARATORY STATEMENT DCA05-DEC-219

Engr: JAVAD AHMAD
CIVIL
FLA. PE # 70592
C.A.N. 3538

JUN 14 2013

AL-FAROOQ CORPORATION
ENGINEERS & PRODUCT DEVELOPMENT
1235 S.W. 87 AVE
MIAMI, FLORIDA 33174
TEL. (305) 264-8100 FAX. (305) 262-6978

COMP-ANL\W05-32GWL

SERIES 200L ALUM SLIDING GLASS DOOR (L.M.I.)

GLASSWALL, LLC
3550 N.W. 49 STREET
MIAMI, FL. 33142
TEL. (305) 638-5158 FAX. (305) 638-5151

revisions:			
no	date	by	description
C	05.25.09		NO CHANGE THIS SHEET
D	12.27.12		GENERAL REVISION
E	01.29.13		REV. PER RER COMMENTS
F	02.11.13		NO CHANGES THIS SHEET
G	06.14.13		NO CHANGE THIS SHEET

date: 05-31-05
scale: 1/2" = 1"
dr. by: TARIQ
chk. by:

drawing no.
W05-32

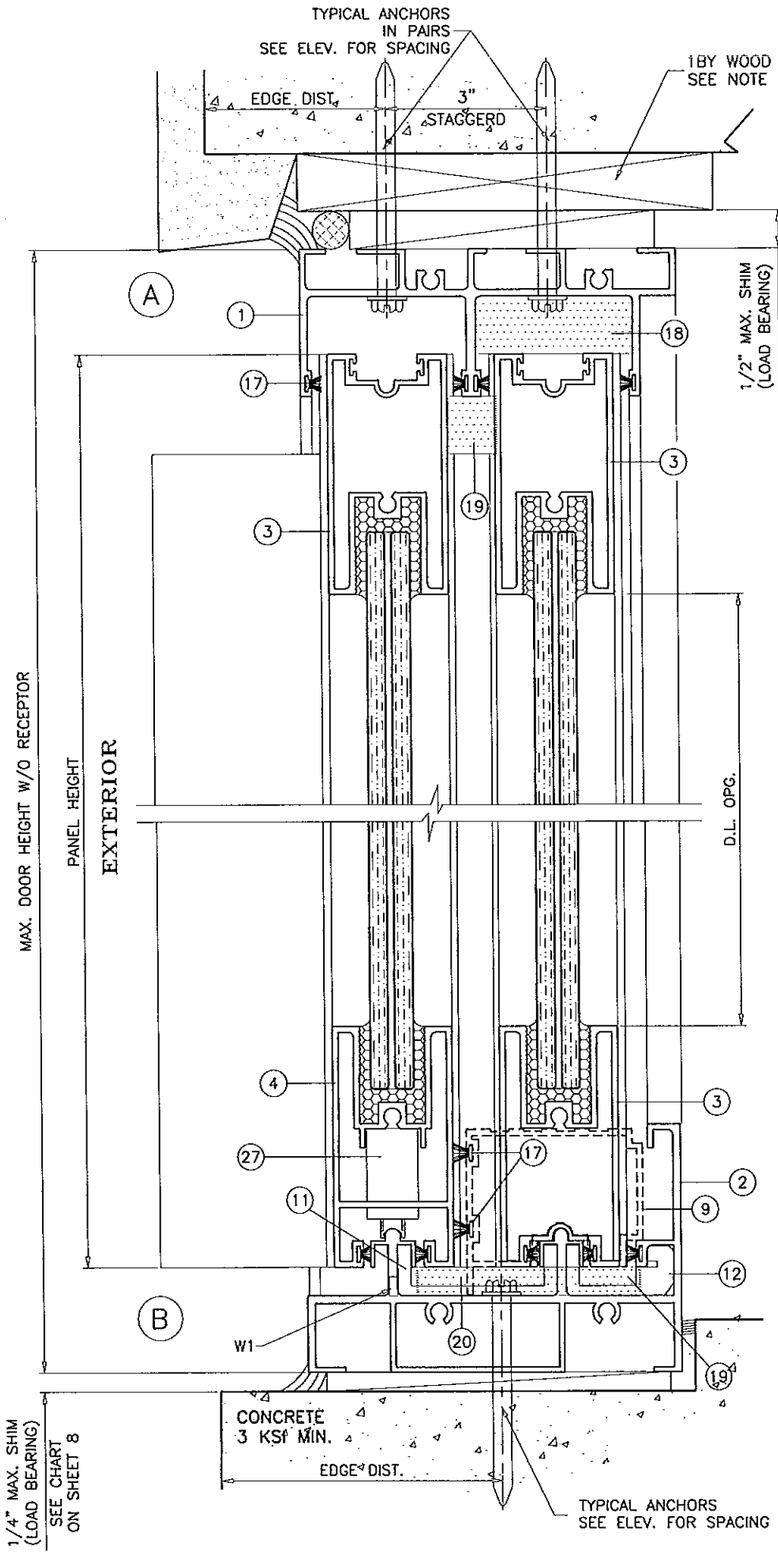

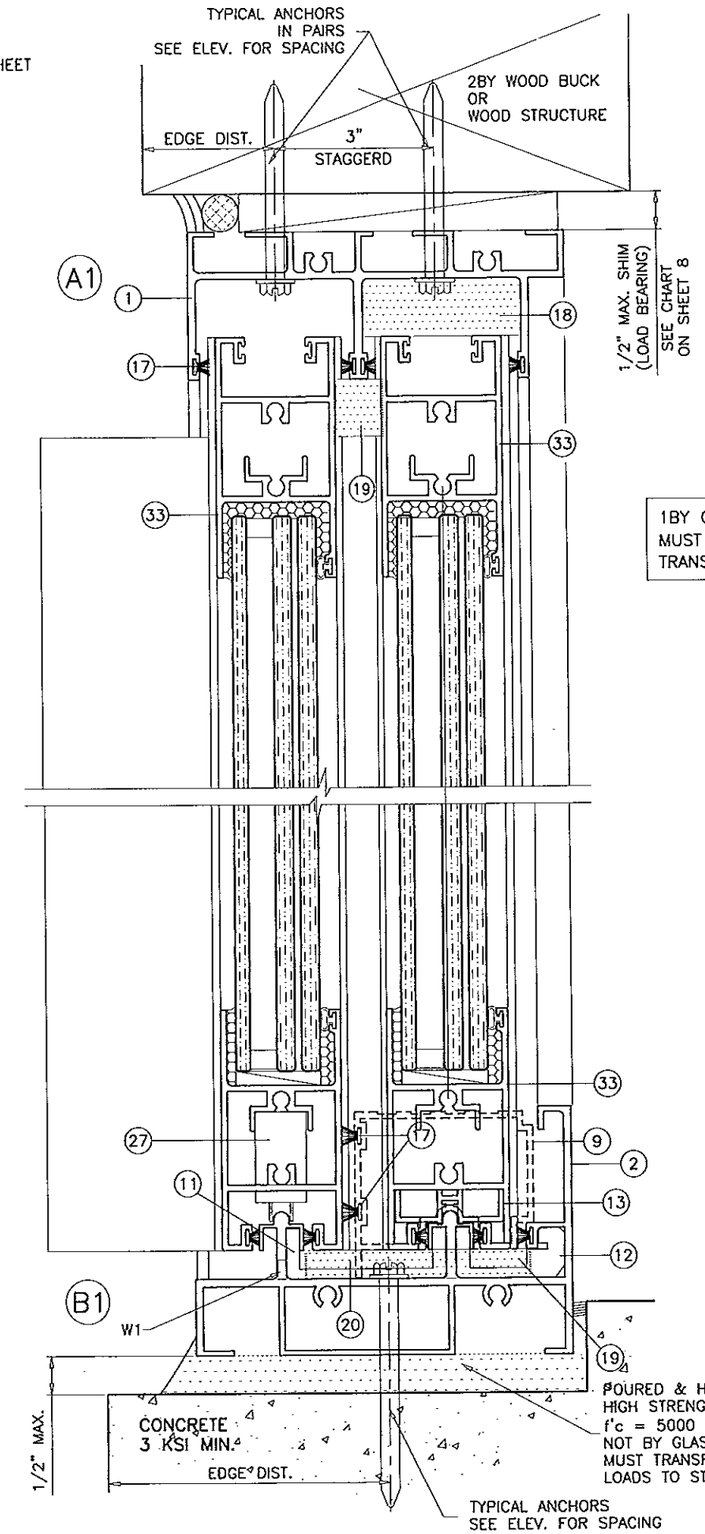

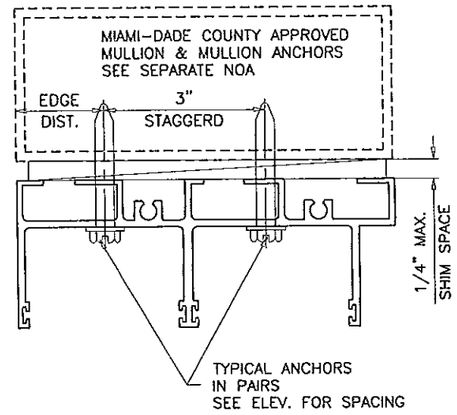

1BY OR 2BY WOOD BUCKS AND METAL STRUCTURES NOT BY GLASSWALL MUST SUPPORT LOADS IMPOSED BY GLAZING SYSTEM AND TRANSFER THEM TO THE BUILDING STRUCTURE.

SEALANTS:

ALL FRAME AND PANEL JOINT, INSTALLATION SCREWS AND HEADS OF ANCHOR SCREWS AT SILL TO BE SEALED WITH BLACK/ALUM COLORED SILICONE.

WEEPS:

W1 = 1/4" X 2-1/2" WEEP SLOTS AT 10" FROM ENDS

PRODUCT REVISED
as complying with the Florida Building Code
Acceptance No. 13-0617.30
Expiration Date 7/8/14
By Meng L. Chan
Miami Dade Product Control

Engr: JAVAD AHMAD
CIVIL
FLA. PE # 70592
C.A.N. 3538
JUN 14 2013

AL-FAROOQ CORPORATION
ENGINEERS & PRODUCT DEVELOPMENT
1235 S.W. 87 AVE
MIAMI, FLORIDA 33174
TEL. (305) 264-8100 FAX. (305) 262-6975
COMP-ANL\W05-32GWL

SERIES 200L ALUM SLIDING GLASS DOOR (L.M.I.)

GLASSWALL, LLC
3550 N.W. 49 STREET
MIAMI, FL. 33142
TEL. (305) 638-5151 FAX. (305) 638-5158

revisions:			
no	date	by	description
C	09.25.09		REV. PER BCCO COMMENTS
D	12.27.12		GENERAL REVISION
E	01.29.13		REV. PER RER COMMENTS
F	02.11.13		DETAILS CORRECTED
G	06.14.13		NO CHANGE THIS SHEET

date: 05-31-05
scale: 1/2" = 1"
dr. by: TARIQ
chk. by:

drawing no.
W05-32

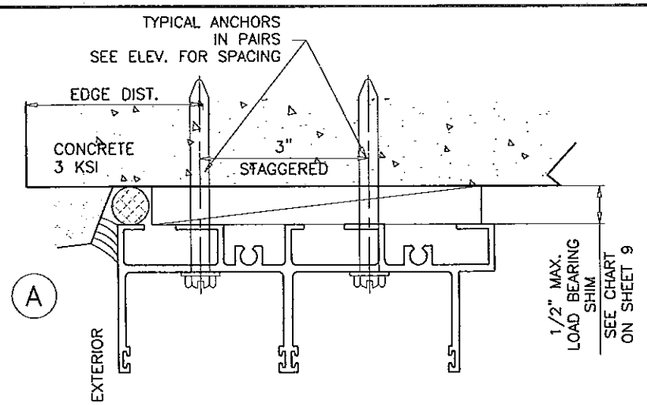

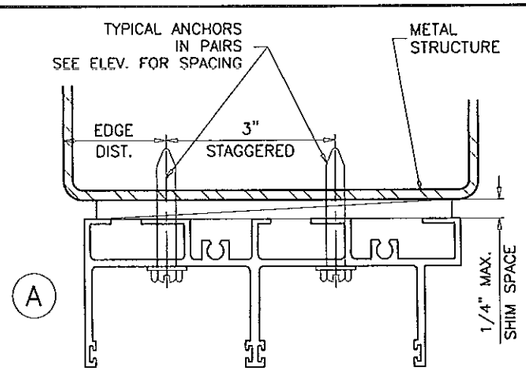

DOORS WITHOUT HEAD RECEPTOR

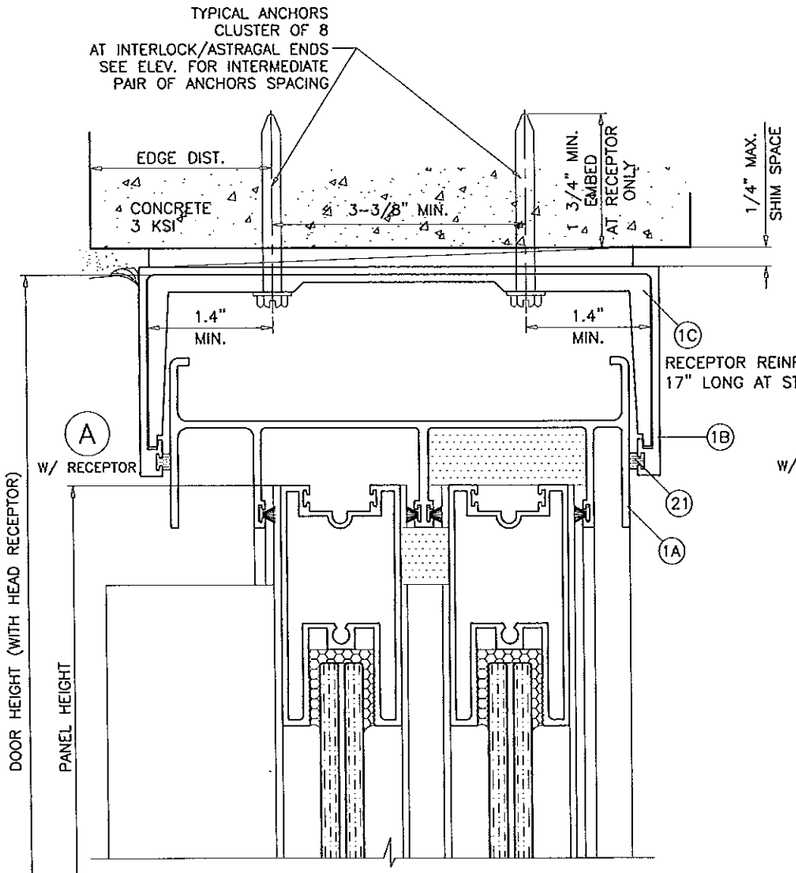

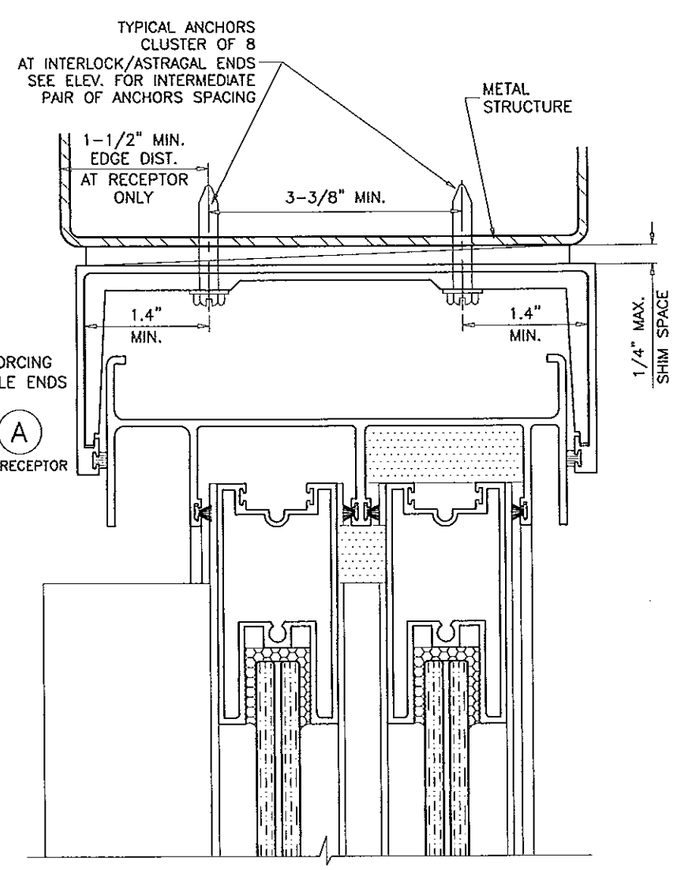

DOORS WITH HEAD RECEPTOR

PRODUCT REVISED
to complying with the Florida
Building Code
Acceptance No. 13-0617.30
Expiration Date 7/8/14
By Ishaq I. Chanda
Miami-Dade Product Control

TYPICAL ANCHORS: SEE ELEV. FOR SPACING

AT HEAD

TYPE 'A'

1/4" DIA HILTI KWIK-CON II (Fu=163 KSI, Fy=157 KSI)
DIRECTLY INTO CONCRETE
1-1/4" MIN. CONC. EMBEDMENT (WITHOUT RECEPTOR)
1-3/4" MIN. CONC. EMBEDMENT (WITH RECEPTOR)

TYPE 'B'

1/4" DIA HILTI KWIK-CON II (Fu=163 KSI, Fy=157 KSI)
THRU 1BY BUCKS INTO CONC., 1-1/4" MIN. CONC. EMBED.
INTO 2BY BUCKS, 1-1/2" MIN. WOOD EMBEDMENT

TYPE 'C'

1/4" TEKS OR SELF DRILLING SCREWS (GRADE 5 CRS)
1/4" ST. STEEL SMS (CW) (GRADE 2)
INTO METAL STRUCTURES OR APPROVED MULLIONS
STEEL : 1/8" THK. MIN. (Fy = 36 KSI MIN.)
ALUMINUM : 1/8" THK. MIN. (6063-T5 MIN.)
(STEEL IN CONTACT WITH ALUMINUM TO BE PLATED OR PAINTED)

AT SILL

1/4" DIA HILTI KWIK-CON II (Fu=163 KSI, Fy=157 KSI)
DIRECTLY INTO CONCRETE, 1-1/4" MIN. EMBEDMENT

AT JAMBS

1/4" DIA. HILTI KWIK-CON II (Fu=163 KSI, Fy=157 KSI)
THRU 1BY BUCKS, 1-1/4" MIN. CONC. OR MASONRY EMBED.
INTO 2BY BUCKS, 1-1/2" MIN. WOOD EMBEDMENT
DIRECTLY INTO MASONRY OR CONCRETE
1-1/4" MIN. MASONRY OR CONCRETE EMBEDMENT

1/4" TEKS OR SELF DRILLING SCREWS (GRADE 5 CRS)
1/4" ST. STEEL SMS (CW) (GRADE 2)
INTO METAL STRUCTURES OR APPROVED MULLIONS
STEEL : 1/8" THK. MIN. (Fy = 36 KSI MIN.)
ALUMINUM : 1/8" THK. MIN. (6063-T5 MIN.)
(STEEL IN CONTACT WITH ALUMINUM TO BE PLATED OR PAINTED)

ANCHOR EDGE DISTANCES

INTO CONCRETE = 1-1/2" MIN.
INTO WOOD STRUCTURE = 1" MIN.
INTO METAL STRUCTURE = 3/4" MIN.

CONCRETE AT HEAD OR SILL f'c = 3000 PSI MIN.
CONCRETE AT JAMBS f'c = 3000 PSI MIN.
C-90 HOLLOW/FILLED BLOCK AT JAMBS f'm = 2000 PSI MIN.

Engr: JAVAD AHMAD
CIVIL
FLA. PE # 70592
C.A.N. 3538

JUN 14 2013

AL-FAROOQ CORPORATION
ENGINEERS & PRODUCT DEVELOPMENT
1235 S.W. 87 AVE
MIAMI, FLORIDA 33174
TEL. (305) 264-8100 FAX. (305) 262-6978

COMP-ANL\W05-32GWL

SERIES 200L ALUM SLIDING GLASS DOOR (L.M.I.)

GLASSWALL, LLC
3550 N.W. 49 STREET
MIAMI, FL. 33142
TEL. (305) 638-5151 FAX. (305) 638-5158

revisions:			
no	date	by	description
C	09.25.09		REV. PER BCCO COMMENTS
D	12.27.12		GENERAL REVISION
E	01.29.13		REV. PER RER COMMENTS
F	02.11.13		NO CHANGES THIS SHEET
G	06.14.13		NO CHANGE THIS SHEET

date: 05-31-05
scale: 1/2" = 1"
dr. by: TARIQ
chk. by:

drawing no.
W05-32

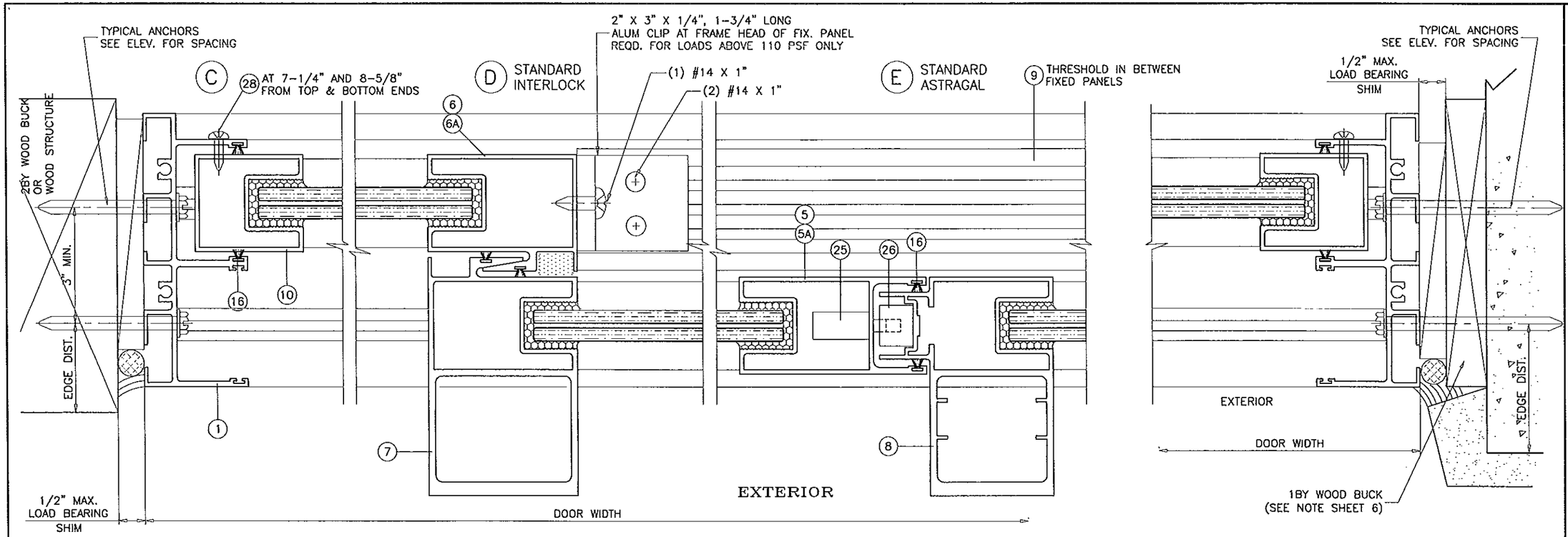

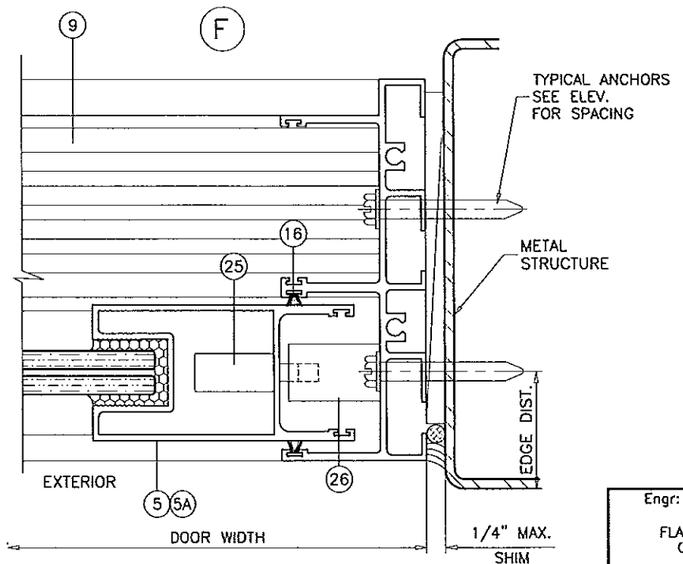

PRODUCT REVISED
as complying with the Florida
Building Code
Acceptance No. 13-0617.30
Expiration Date 7/1/14
By Ishaq I. Chaudhary
Product Control

Engr: JAVAD AHMAD
CIVIL
FLA. PE # 70592
C.A.N. 3538

JUN 14 2013

AL-FAROOQ CORPORATION
ENGINEERS & PRODUCT DEVELOPMENT
1235 S.W. 87 AVE
MIAMI, FLORIDA 33174
TEL. (305) 264-8100 FAX. (305) 262-6978

COMP-ANL\W05-32GWL

SERIES 200L ALUM SLIDING GLASS DOOR (L.M.I.)

GLASSWALL, LLC
3550 N.W. 49 STREET
MIAMI, FL. 33142
TEL. (305) 638-5151 FAX. (305) 638-5158

revisions:

no	date	by	description
C	09.25.09		NO CHANGE THIS SHEET
D	12.27.12		GENERAL REVISION
E	01.29.13		REV. PER RER COMMENTS
F	02.11.13		DETAIL REMOVED
G	06.14.13		FIX. STILE DTL. REV.

date: 05-31-05
scale: 1/2" = 1"
dr. by: TARIQ
chk. by:

drawing no.
W05-32

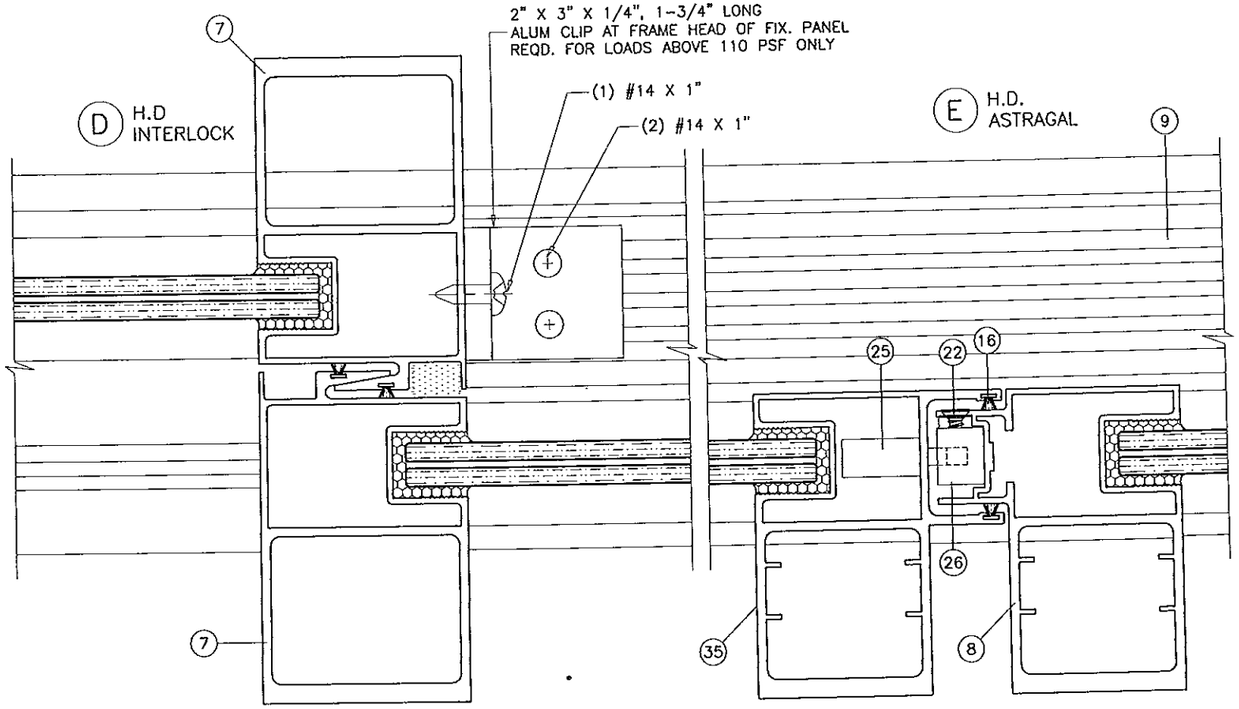

EXTERIOR

PRODUCT REVISED
as complying with the Florida
Building Code
Acceptance No 13-0617.30
Expiration Date 7/6/14
By Ishaq I. Chanda
Miami-Dade Product Control

Engr: JAVAD AHMAD
CIVIL
FLA. PE # 70592
C.A.N. 3538
JUN 14 2013

AL-FAROOQ CORPORATION
ENGINEERS & PRODUCT DEVELOPMENT
1235 S.W. 87 AVE
MIAMI, FLORIDA 33174
TEL. (305) 264-8100 FAX. (305) 262-6978
COMP-ANL\W05-32GWL

SERIES 200L ALUM SLIDING GLASS DOOR (L.M.I.)

GLASSWALL, LLC
3550 N.W. 49 STREET
MIAMI, FL. 33142
TEL. (305) 638-5151 FAX. (305) 638-5158

revisions:

no	date	by	description
C	09.25.09		NO CHANGE THIS SHEET
D	12.27.12		GENERAL REVISION
E	01.29.13		REV. PER RER COMMENTS
F	02.11.13		NO CHANGES THIS SHEET
G	06.14.13		NO CHANGE THIS SHEET

date: 05-31-05
scale: 1/2" = 1"
dr. by: TARIQ
chk. by:

drawing no.
W05-32

sheet 13 of 19

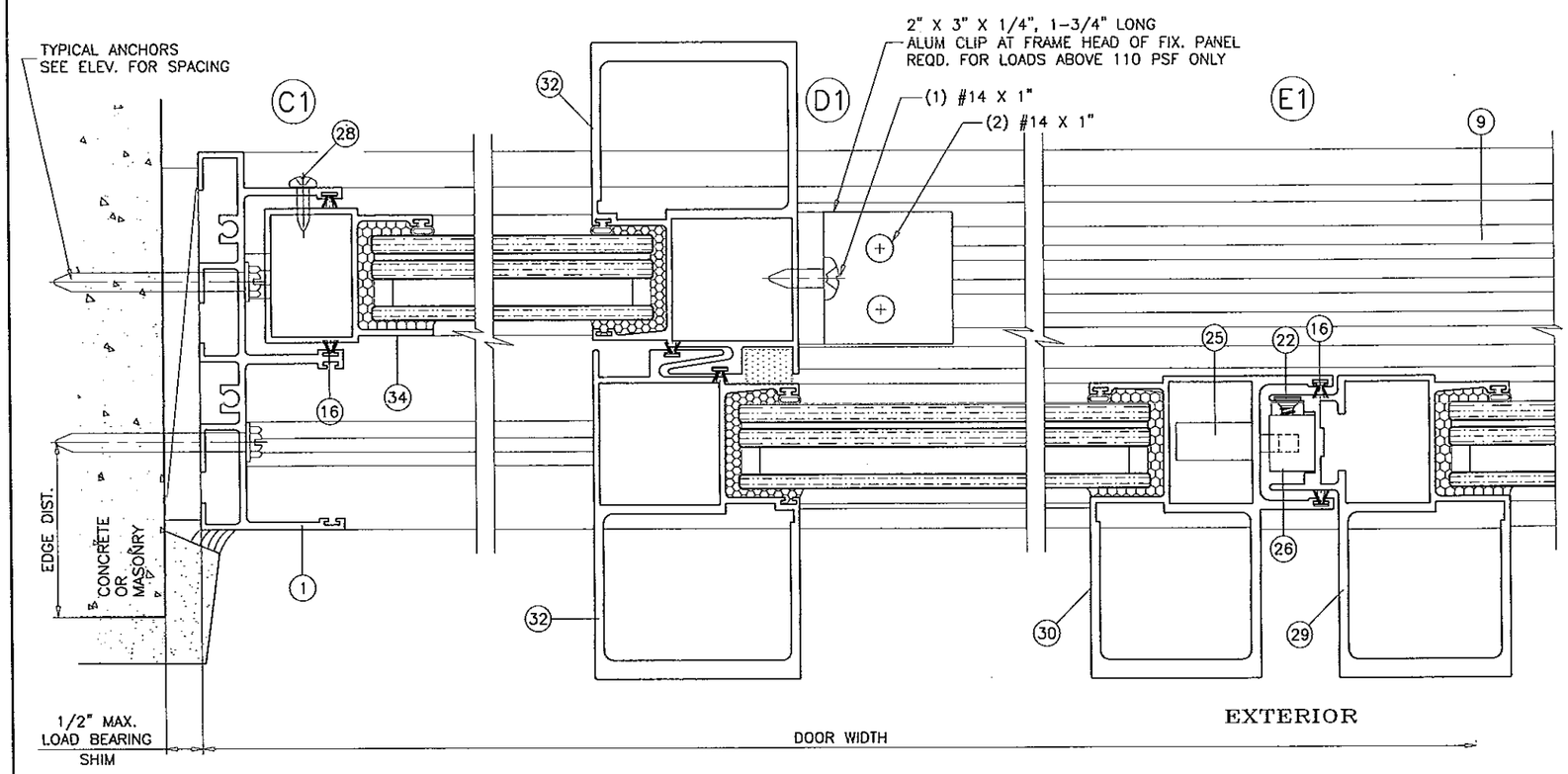

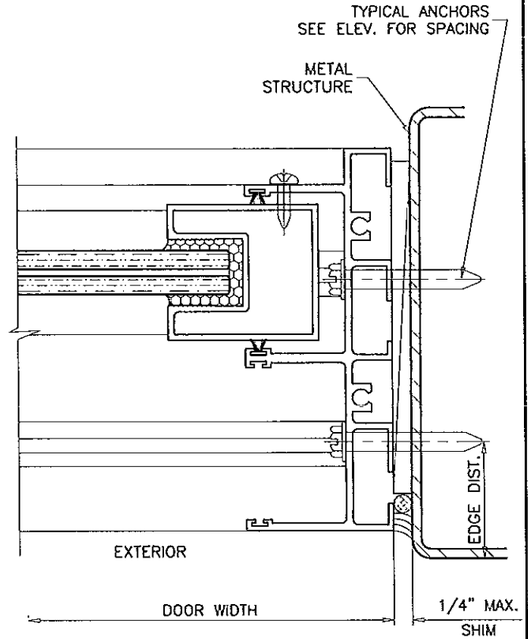

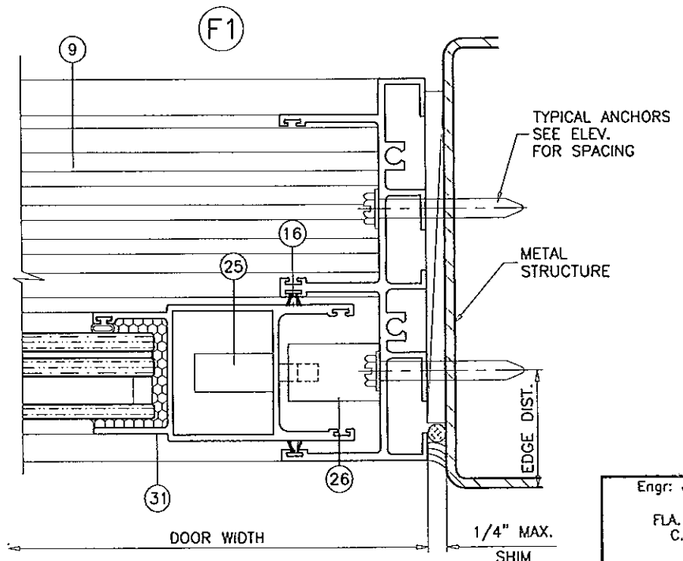

PRODUCT APPROVED
as complying with the Florida
Building Code
Acceptance No. 13-0617.30
Expiration Date 7/8/14
Product Control

Engr: JAVAD AHMAD
CIVIL
FLA. PE # 70592
C.A.N. 3538

JUN 14 2013

AL-FAROOQ CORPORATION
ENGINEERS & PRODUCT DEVELOPMENT
1235 S.W. 87 AVE
MIAMI, FLORIDA 33174
TEL. (305) 264-8100 FAX. (305) 262-6978

COMP-ANL\W05-32GWL

SERIES 200L ALUM SLIDING GLASS DOOR (L.M.I.)

GLASSWALL, LLC
3550 N.W. 49 STREET
MIAMI, FL. 33142
TEL. (305) 638-5151 FAX. (305) 638-5158

revisions:

no	date	by	description
C	09.25.08		NO CHANGE THIS SHEET
D	12.27.12		GENERAL REVISION
E	01.29.13		REV. PER RER COMMENTS
F	02.11.13		DETAIL REMOVED
G	06.14.13		FIX. STILE DTL. REV.

date: 05-31-05
scale: 1/2" = 1"
dr. by: TARIQ
chk. by:

drawing no.
W05-32

sheet 14 of 19

ANCHORS AT HEAD/SILL AND FREE STANDING JAMB ENDS
SEE ELEVATION ON SHEET 4
(APPLICABLE TO ALL SIZES AND CONFIGURATIONS)

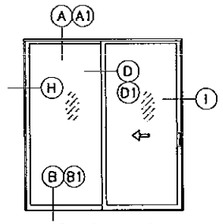

OX (SHOWN)
XO

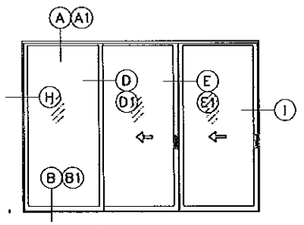

OXX (SHOWN)
XXO

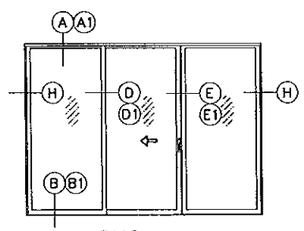

OXO

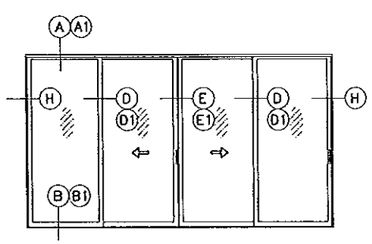

OXXO

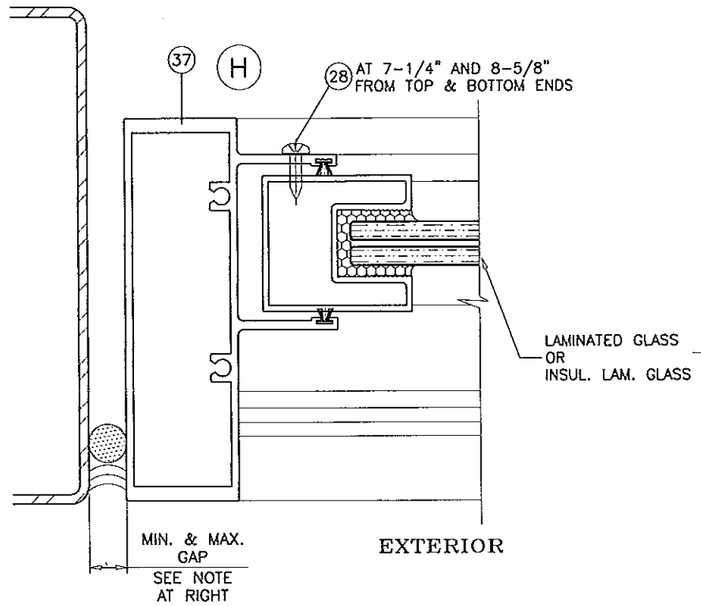

FREE STANDING JAMB
FIXED SIDE

Ix IN^4	Sx IN^3
5.989	2.240

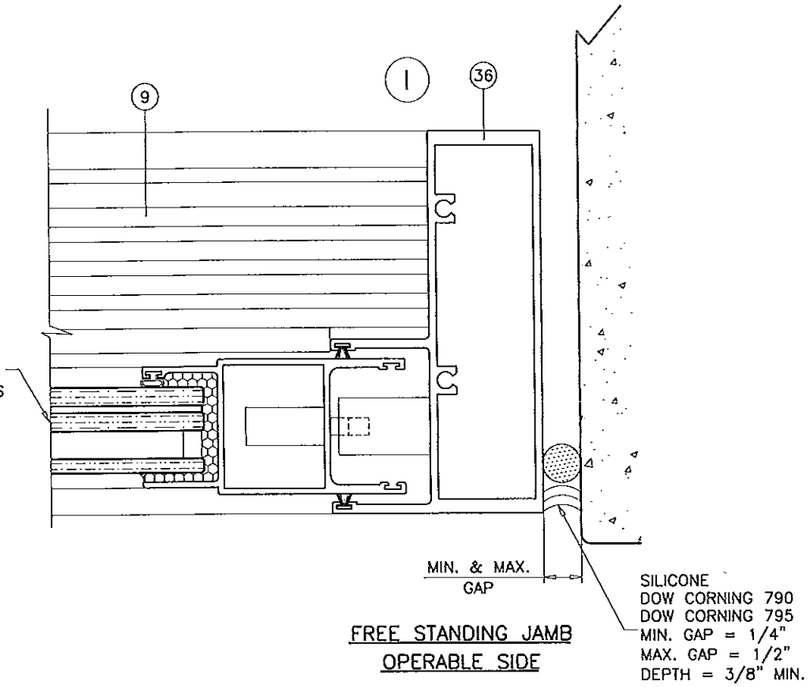

FREE STANDING JAMB
OPERABLE SIDE

MAX. DESIGN LOADS:
(OXO) AND (OXXO) CONFIGURATIONS = ±75.0 PSF
ALL OTHER CONFIGURATIONS = ±72.1 PSF

PRODUCT REVISED
as complying with the Florida
Building Code
Acceptance No. 13-0617.30
Expiration Date 7/9/14
By
Miami-Dade Product Control

Engr: JAVAD AHMAD
CIVIL
FLA. PE # 70592
C.A.N. 3538

JUN 14 2013

AL-FAROOQ CORPORATION
ENGINEERS & PRODUCT DEVELOPMENT
1235 S.W. 87 AVE
MIAMI, FLORIDA 33174
TEL. (305) 264-8100 FAX. (305) 262-6978

COMP-ANL\W05-32GWL

SERIES 200L ALUM SLIDING GLASS DOOR (L.M.I.)

GLASSWALL, LLC
3550 N.W. 49 STREET
MIAMI, FL. 33142
TEL. (305) 638-5158 FAX. (305) 638-5151

revisions:

no	date	by	description
C	09.25.09		NO CHANGE THIS SHEET
D	12.27.12		GENERAL REVISION
E	01.29.13		REV. PER RER COMMENTS
F	02.11.13		DETAILS CORRECTED
G	06.14.13		NO CHANGE THIS SHEET

date: 05-31-05
scale: 1/2" = 1"
dr. by: TARIQ
chk. by:

drawing no.
W05-32

sheet 15 of 19

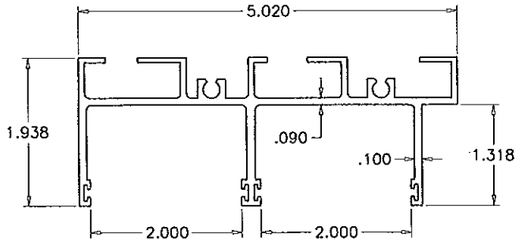

(1) FRAME HEAD/JAMB

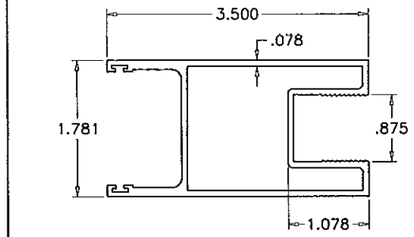

(5) LOCK STILE
LAM. GLASS

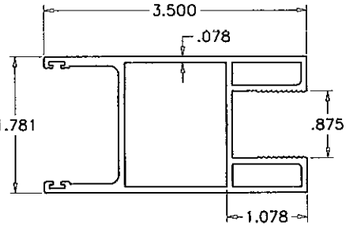

(5A) ALTERNATE LOCK STILE
LAM. GLASS

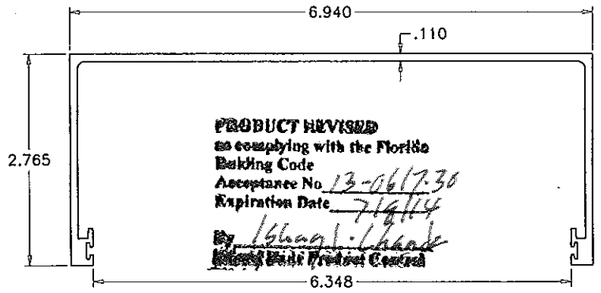

PRODUCT REVISED
to complying with the Florida
Building Code
Acceptance No. 13-0617.36
Expiration Date 7/9/14
By
Miami-Dade Product Control

(1B) HEAD RECEPTOR

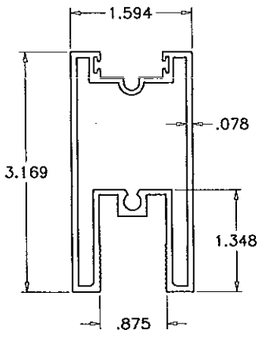

(3) PANEL TOP RAIL
FIX. PANEL BOTTOM RAIL
LAM. GLASS

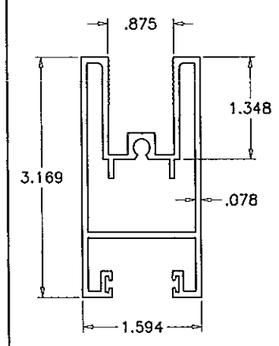

(4) MOV. PANEL BOTTOM RAIL
LAM. GLASS

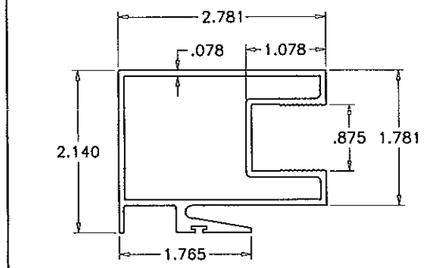

(6) STD. INTERIOR INTERLOCK
LAM. GLASS

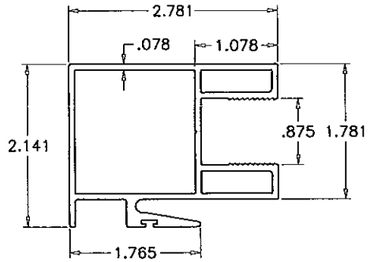

(6A) ALTERNATE STD. INTERIOR INTERLOCK
LAM. GLASS

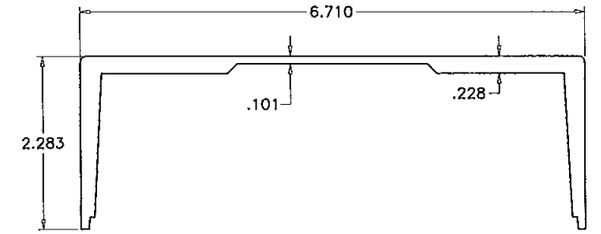

(1C) RECEPTOR REINFORCING

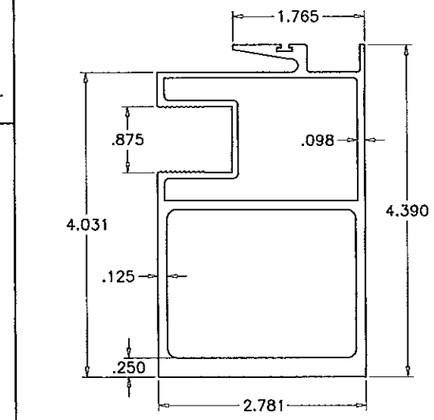

(7) EXTERIOR/INTERIOR INTERLOCK
LAM. GLASS

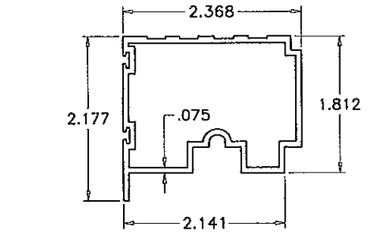

(9) THRESHOLD

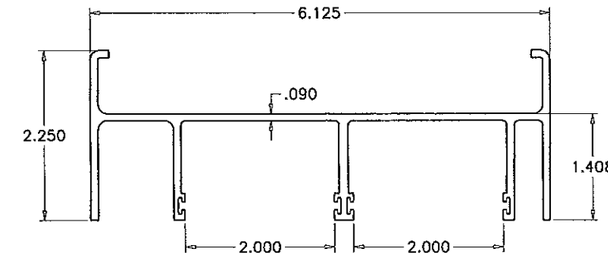

(1A) FRAME HEAD AT HEAD RECEPTOR

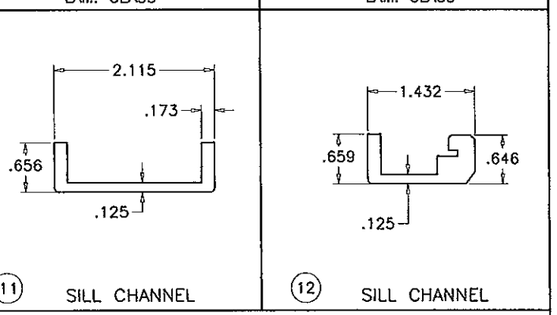

(11) SILL CHANNEL

(12) SILL CHANNEL

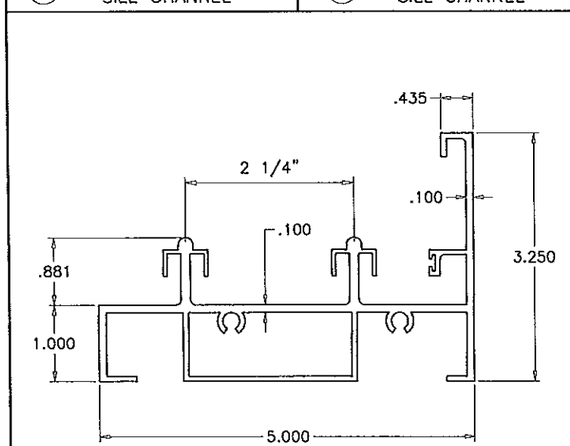

(2) FRAME SILL

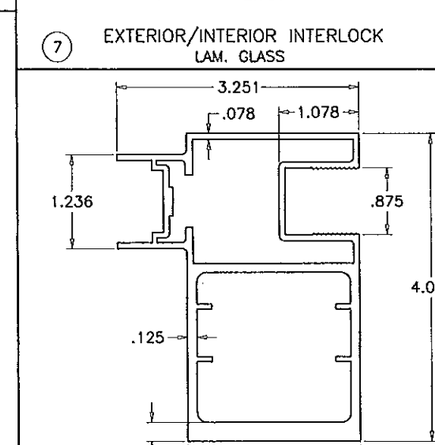

(8) MALE ASTRAGAL STILE
LAM. GLASS

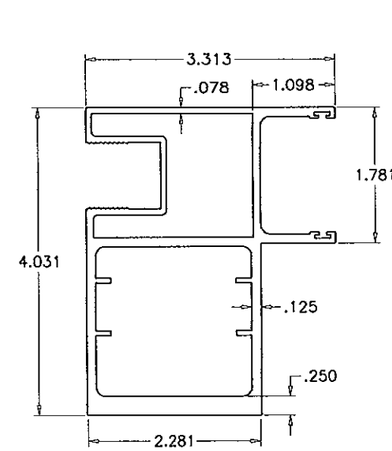

(35) FEMALE ASTRAGAL STILE
LAM. GLASS

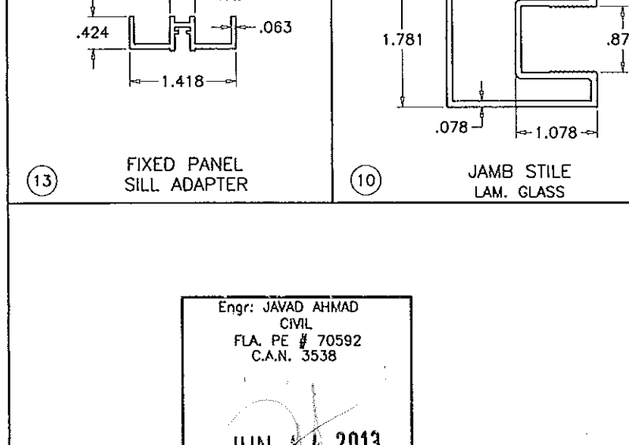

(13) FIXED PANEL
SILL ADAPTER

(10) JAMB STILE
LAM. GLASS

Engr: JAVAD AHMAD
CIVIL
FLA. PE # 70592
C.A.N. 3538

JUN 14 2013

AL-FAROOQ CORPORATION
ENGINEERS & PRODUCT DEVELOPMENT
1235 S.W. 87 AVE
MIAMI, FLORIDA 33174
TEL. (305) 264-8100 FAX. (305) 262-6978

COMP-ANL\W05-32GWL

SERIES 200L ALUM SLIDING GLASS DOOR (L.M.I.)

GLASSWALL, LLC
3550 N.W. 49 STREET
MIAMI, FL. 33142
TEL. (305) 638-5158 FAX. (305) 638-5151

revisions:			
no	date	by	description
C	09.25.09		REV. PER BCCO COMMENTS
D	12.27.12		GENERAL REVISION
E	01.28.13		REV. PER RER COMMENTS
F	02.11.13		NO CHANGES THIS SHEET
G	06.14.13		NO CHANGE THIS SHEET

date: 05-31-05
scale: 1/2" = 1"
dr. by: TARIQ
chk. by:

drawing no.
W05-32

sheet 16 of 19

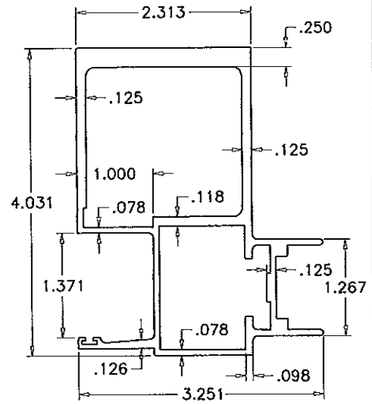

(29) MALE MATING STILE
INSUL. LAM. GLASS

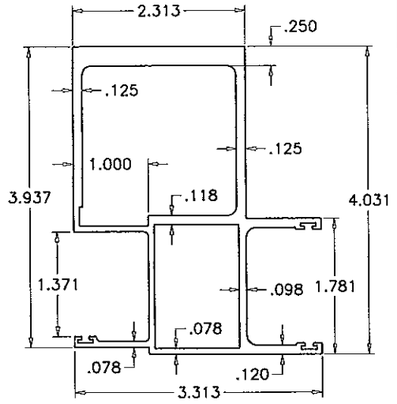

(30) FEMALE MATING STILE
INSUL. LAM. GLASS

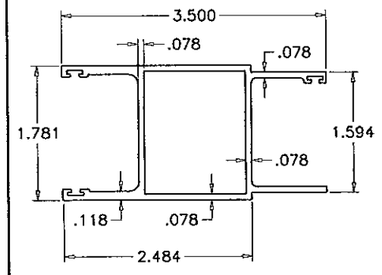

(31) LOCK STILE
INSUL. LAM. GLASS

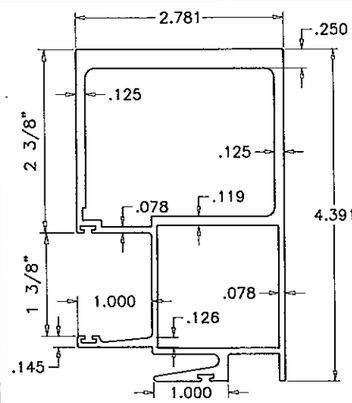

(32) MAJOR INTERLOCK STILE
INSUL. LAM. GLASS

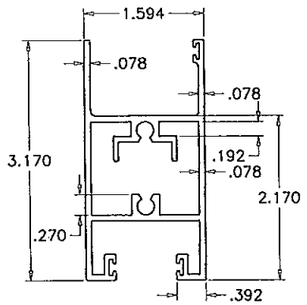

(33) TOP & BOTTOM RAIL
INSUL. LAM. GLASS

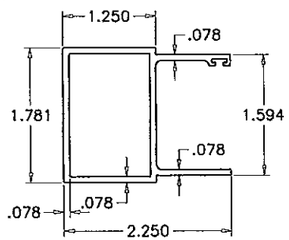

(34) FIXED STILE
INSUL. LAM. GLASS

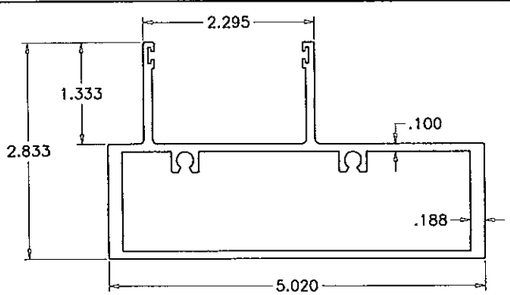

(36) FREE STANDING FRAME JAMB (TYPE1)
LIMIT MAX LOADS TO ±75.0 PSF

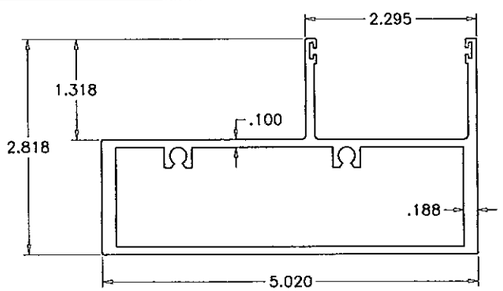

(37) FREE STANDING FRAME JAMB (TYPE 2)
LIMIT MAX LOADS TO ±75.0 PSF

ITEM #	PART #	QUANTITY	DESCRIPTION	MATERIAL	MANF./SUPPLIER/REMARKS
1	100-001	AS REQD.	FRAME HEAD/JAMB	6063-T6	–
1A	100-009	AS REQD.	FRAME HEAD	6005-T5	–
1B	100-019	AS REQD.	HEAD RECEPTOR	6005-T5	–
1C	100-020	AS REQD.	RECEPTOR REINFORCING	6005-T5	ABOVE LOCK & INTERLOCK STILES
2	100-021	1	FRAME SILL	6063-T6	–
3	100-025	AS REQD.	PANEL TOP RAIL/FIX. PANEL BOTTOM RAIL	6005-T5	–
4	100-024	1/ MOV. PANEL	MOVING PANEL BOTTOM RAIL	6005-T5	–
5	100-004	AS REQD.	LOCK STILE	6005-T5	–
5A	100-004A	AS REQD.	ALTERNATE LOCK STILE	6063-T6	–
6	100-005	AS REQD.	STD. INTERIOR INTERLOCK	6063-T6	–
6A	100-005A	AS REQD.	ALTERNATE STD. INTERIOR INTERLOCK	6063-T6	–
7	100-007	AS REQD.	EXTERIOR/INTERIOR INTERLOCK	6063-T6	–
8	100-006	AS REQD.	ASTRAGAL STILE	6005-T5	–
9	100-022	1	THRESHOLD (LENGTH = OPNG. WIDTH BETWEEN FIXED PANELS)	6063-T6	–
10	100-023	AS REQD.	FIX. JAMB STILE (LAM. GLASS)	6063-T6	–
11	100-013	2	SILL CHANNEL CLIP, 2-7/16" LONG	–	AT INTERLOCK STILES
12	100-014	2	SILL CHANNEL CLIP, 2-7/16" LONG	–	AT INTERLOCK STILES
13	300-016	AS REQD.	FIXED PANEL ADAPTER	6005-T5	–
15	3"x 2"x 1/4"	1/ FIX PANEL	ANCHOR CLIP (AT TOP OF FIXED PANEL)	ALUMINUM	ANCHOR CLIP
16	568-61279	–	FIN SEAL W'STRIPPING (.270 HT.)	–	ULTRAFAB
17	568-62379	–	FIN SEAL W'STRIPPING (.370 HT)	–	ULTRAFAB
18	P1000AFK(PC)2	–	ADHESIVE BACK PILE PAD	–	ULTRAFAB
19	P6309AFK(PC).75	–	ADHESIVE BACK PILE PAD	–	ULTRAFAB
20	P5009AFK(PC)1.75	–	ADHESIVE BACK PILE PAD	–	ULTRAFAB
21	7P448	AS REQD.	RECEPTOR GASKET	–	PROTOTYPE PLASTICS
22	3/16"x 7/16"x 4"	1/ ASTRAGAL	ALUMINUM REINFORCEMENT	ALUMINUM	–
23	#14 X 1"	–	FRAME AND PANEL ASS'Y SCREWS	S. STEEL	PH SMS
25	D-60C	1	3 POINT MORTISE HOOK LOCK	–	DOOR & WINDOW HARDWARE
26	KP-60	1	LOCK KEEPER	ALUMINUM	DOOR & WINDOW HARDWARE
27	–	2/ PANEL	PANEL ROLLERS AT 6" FROM ENDS	S. STEEL	DOOR & WINDOW HARDWARE
28	#10 X 3/4"	4/ PANEL	FIXED PANEL SCREWS	S. STEEL	PH SMS
29	300-010	AS REQD.	MALE MATING STILE (INSUL. LAM. GLASS)	6005-T5	–
30	300-011	AS REQD.	FEMALE MATING STILE (INSUL. LAM. GLASS)	6005-T5	–
31	300-012	AS REQD.	LOCK STILE (INSUL. LAM. GLASS)	6005-T5	–
32	300-014	AS REQD.	MAJOR INTERLOCK STILE (INSUL. LAM. GLASS)	6005-T5	–
33	300-015	AS REQD.	TOP & BOTTOM RAIL (INSUL. LAM. GLASS)	6005-T5	–
34	300-017	AS REQD.	FIXED STILE (INSUL. LAM. GLASS)	6005-T5	–
35	100-031	AS REQD.	FEMALE MATING STILE (LAM. GLASS)	6005-T5	–
36	100-028	AS REQD.	FREE STANDING FRAME JAMB (TYPE 1)	6005-T5	–
37	100-029	AS REQD.	FREE STANDING FRAME JAMB (TYPE 2)	6005-T5	–

PRODUCT REVISED
as complying with the Florida
Building Code
Acceptance No 13-0617.30
Expiration Date July 08, 2014
By Ishaq I. Kunda
Miami Dade Product Control

Engr: JAVAD AHMAD
CIVIL
FLA. PE # 70592
C.A.N. 3538

JUN 14 2013

AL-FAROOQ CORPORATION
ENGINEERS & PRODUCT DEVELOPMENT
1235 S.W. 87 AVE
MIAMI, FLORIDA 33174
TEL. (305) 264-8100 FAX. (305) 262-6978

COMP-ANL\W05-32GWL

SERIES 200L ALUM SLIDING GLASS DOOR (L.M.I.)

GLASSWALL, LLC
3550 N.W. 49 STREET
MIAMI, FL. 33142
TEL. (305) 638-5158 FAX. (305) 638-5151

revisions:

no	date	by	description
C	09.25.09		NO CHANGE THIS SHEET
D	12.27.12		GENERAL REVISION
E	01.29.13		REV. PER RER COMMENTS
F	02.11.13		SUPPLIER CORRECTED
G	06.14.13		NO CHANGE THIS SHEET

date: 05-31-05
scale: 1/2" = 1"
dr. by: TARIQ
chk. by:

drawing no.
W05-32

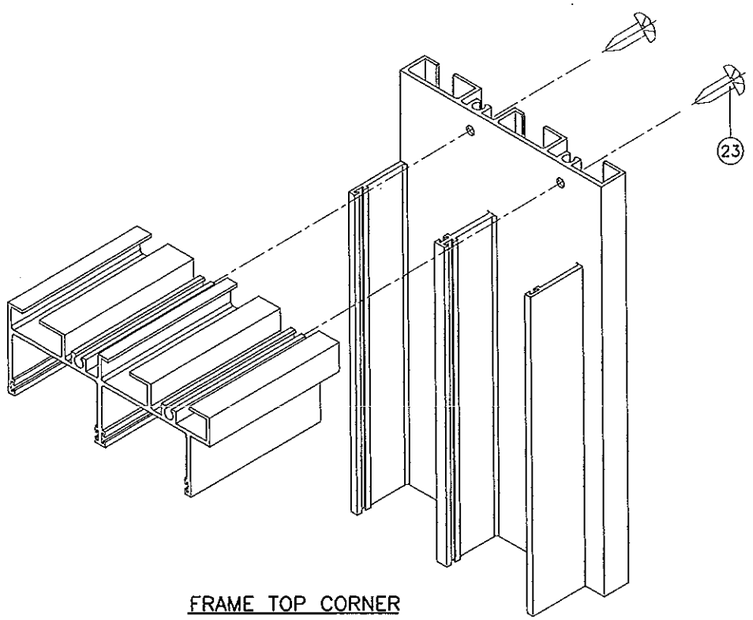

FRAME TOP CORNER
STD. JAMB

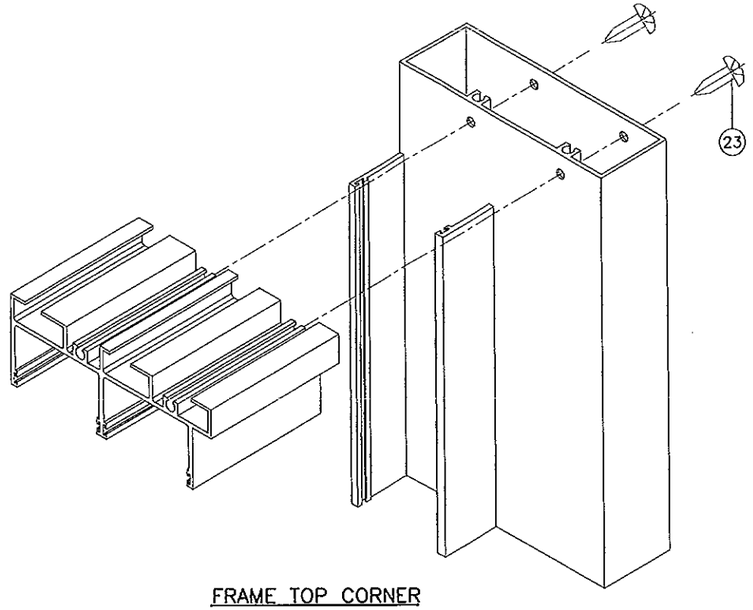

FRAME TOP CORNER
FREE STANDING JAMB

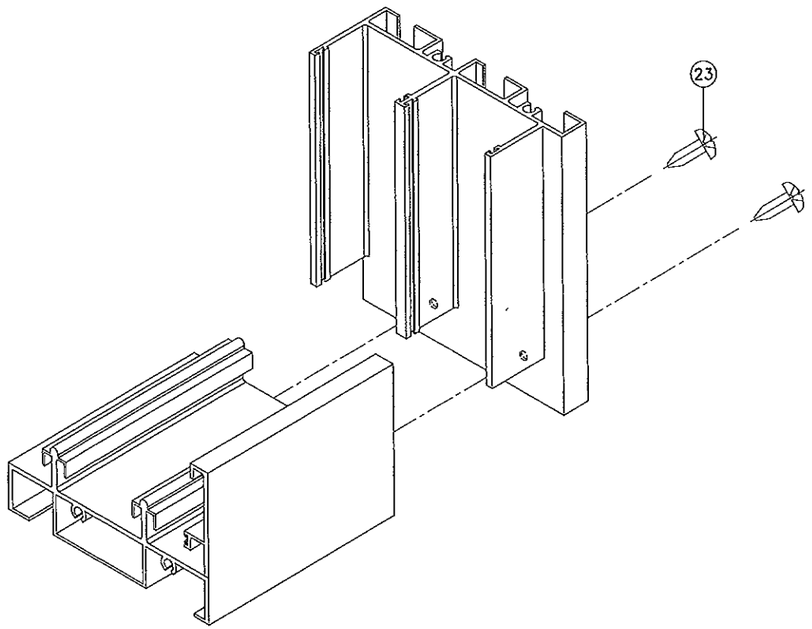

FRAME BOTTOM CORNER
STD. JAMB

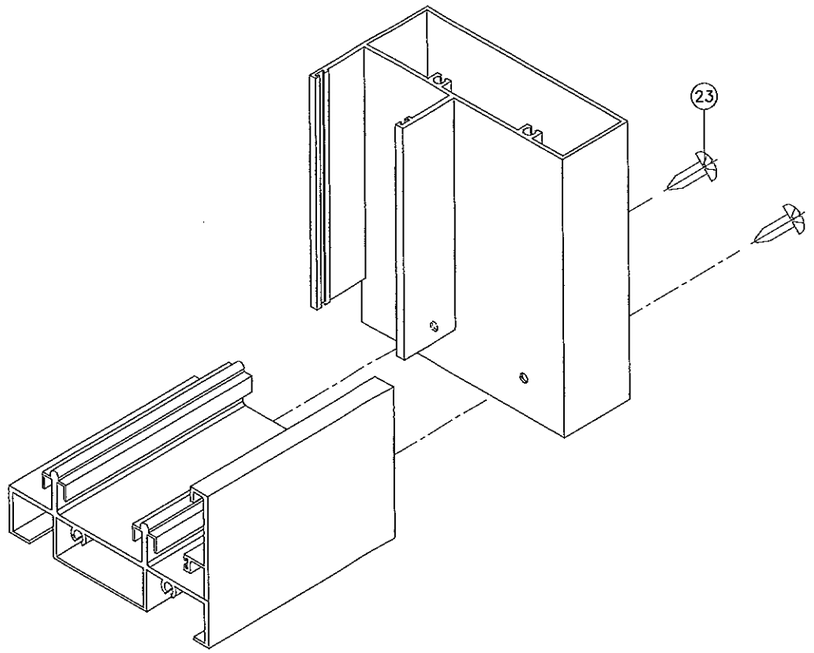

FRAME BOTTOM CORNER
FREE STANDING JAMB

PRODUCT REVISED
as complying with the Florida
Building Code
Acceptance No. B-0617.30
Expiration Date 2/8/14
By: [signature]
Miami-Dade Product Control

Engr: JAVAD AHMAD
CIVIL
FLA. PE # 70592
C.A.N. 3538

JUN 14 2013

AL-FAROOQ CORPORATION
ENGINEERS & PRODUCT DEVELOPMENT
1235 S.W. 87 AVE
MIAMI, FLORIDA 33174
TEL. (305) 264-8100 FAX. (305) 262-6978

COMP-ANL\W05-32GWL

SERIES 200L ALUM SLIDING GLASS DOOR (L.M.I.)

GLASSWALL, LLC
3550 N.W. 49 STREET
MIAMI, FL. 33142
TEL. (305) 638-5151 FAX. (305) 638-5158

revisions:			
no	date	by	description
C	09.25.09		NO CHANGE THIS SHEET
D	12.27.12		GENERAL REVISION
E	01.29.13		NO CHANGE THIS SHEET
F	02.11.13		NO CHANGE THIS SHEET
G	06.14.13		NO CHANGE THIS SHEET

date: 05-31-05
scale: 1/2" = 1"
dr. by: TARIQ
chk. by:

drawing no.
W05-32

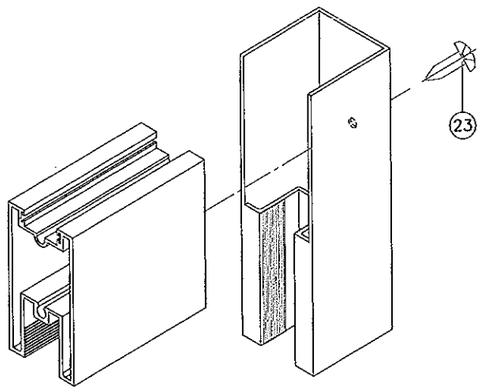

PANEL TOP CORNER
LAM. GLASS

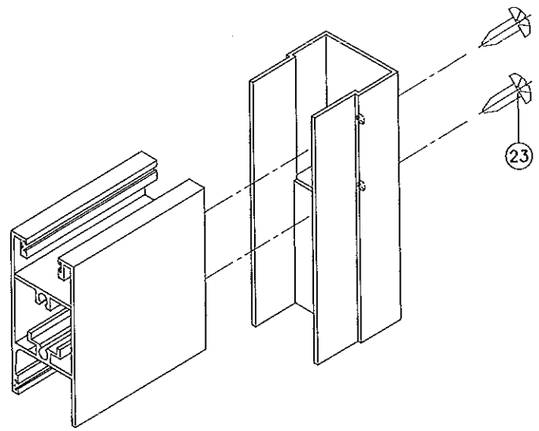

PANEL TOP CORNER
INSUL. LAM. GLASS

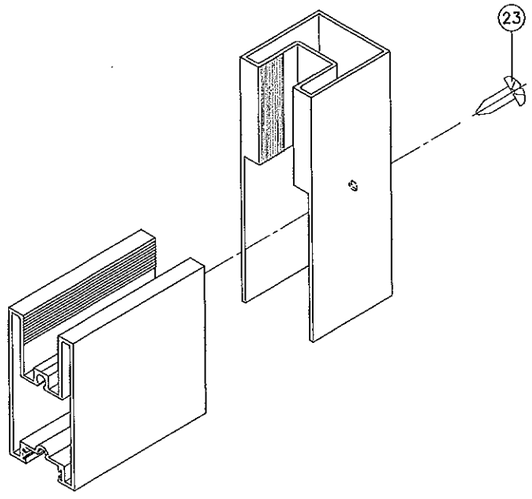

PANEL BOTTOM CORNER
LAM. GLASS

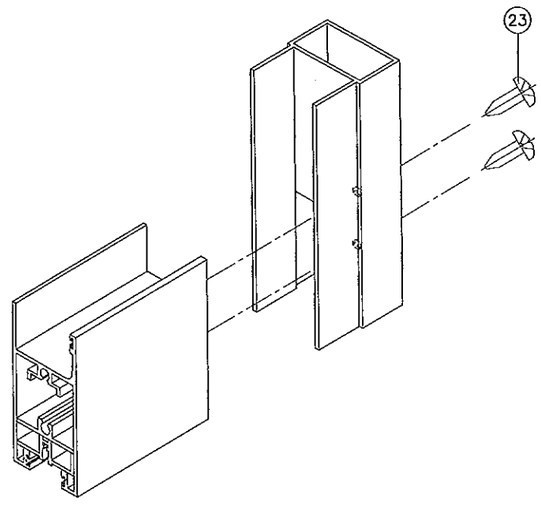

PANEL BOTTOM CORNER
INSUL. LAM. GLASS

PRODUCT REVISED
as complying with the Florida
Building Code
Acceptance No 13-0617.30
Expiration Date July 08, 2014
By Ishaq I. Chand
Florida Bldg Product Control

Engr: JAVAD AHMAD
CIVIL
FLA. PE # 70592
C.A.N. 3538

JUN 14 2013

AL-FAROOQ CORPORATION
ENGINEERS & PRODUCT DEVELOPMENT
1235 S.W. 87 AVE
MIAMI, FLORIDA 33174
TEL. (305) 264-8100 FAX. (305) 262-6978
COMP-ANL\W05-32GWL

SERIES 200L ALUM SLIDING GLASS DOOR (L.M.I.)

GLASSWALL, LLC
3550 N.W. 49 STREET
MIAMI, FL. 33142
TEL. (305) 638-5151 FAX. (305) 638-5158

revisions:

no	date	by	description
C	09.25.09		NO CHANGE THIS SHEET
D	12.27.12		GENERAL REVISION
E	01.29.13		NO CHANGE THIS SHEET
F	02.11.13		NO CHANGE THIS SHEET
G	06.14.13		NO CHANGE THIS SHEET

date: 05-31-05
scale: 1/2" = 1"
dr. by: TARIQ
chk. by:

drawing no.
W05-32

sheet 19 of 19