MIAMI-DADE COUNTY
PRODUCT CONTROL SECTION
11805 SW 26 Street, Room 208
Miami, Florida 33175-2474
T (786) 315-2590 F (786) 315-2599
www.miamidade.gov/economy

DEPARTMENT OF REGULATORY AND ECONOMIC RESOURCES (RER)
BOARD AND CODE ADMINISTRATION DIVISION

NOTICE OF ACCEPTANCE (NOA)

Hartman Windows & Doors, LLC
531 Southern Blvd.
West Palm Beach, Fl. 33405

SCOPE:

This NOA is being issued under the applicable rules and regulations governing the use of construction materials. The documentation submitted has been reviewed and accepted by Miami-Dade County RER -Product Control Section to be used in Miami Dade County and other areas where allowed by the Authority Having Jurisdiction (AHJ).

This NOA shall not be valid after the expiration date stated below. The Miami-Dade County Product Control Section (In Miami Dade County) and/or the AHJ (in areas other than Miami Dade County) reserve the right to have this product or material tested for quality assurance purposes. If this product or material fails to perform in the accepted manner, the manufacturer will incur the expense of such testing and the AHJ may immediately revoke, modify, or suspend the use of such product or material within their jurisdiction. RER reserves the right to revoke this acceptance, if it is determined by Miami-Dade County Product Control Section that this product or material fails to meet the requirements of the applicable building code.

This product is approved as described herein, and has been designed to comply with the Florida Building Code, including the High Velocity Hurricane Zone.

DESCRIPTION: Series "American" Inswing Opaque Wood Patio Doors

APPROVAL DOCUMENT: Drawing No **W08-37 Rev C**, titled "American" inswing Wood Patio Doors" Sheets 1 through 9 of 9, dated 04-25-08 and last revised on Sep 28, 2012, prepared by Al-Farooq Corporation, signed and sealed by Javad Ahmad, P.E., bearing the Miami-Dade County Product Control Renewal stamp with the Notice of Acceptance number and expiration date by the Miami-Dade County Product Control Section.

MISSILE IMPACT RATING: Large and Small Impact

Limitations:

1. Wood material in direct contact with masonry or concrete shall be treated with approved preservative or approved durable species complying w/ chapter 23 of FBC.
2. Min thickness of raised panel=1-3/4" with ¾" min thick tongue and min ½" bites.
3. Meeting Stile anchors applicable to 10 Ft is for (120"-108" high doors) & 8 FT is for (96"-84" high doors).

LABELING: Each unit shall bear a permanent label with the manufacturer's name or logo, city, state and series and following statement: "Miami-Dade County Product Control Approved", noted herein.

RENEWAL of this NOA shall be considered after a renewal application has been filed and there has been no change in the applicable building code negatively affecting the performance of this product.

TERMINATION of this NOA will occur after the expiration date or if there has been a revision or change in the materials, use, and/or manufacture of the product or process. Misuse of this NOA as an endorsement of any product, for sales, advertising or any other purposes shall automatically terminate this NOA. Failure to comply with any section of this NOA shall be cause for termination and removal of NOA.

ADVERTISEMENT: The NOA number preceded by the words Miami-Dade County, Florida, and followed by the expiration date may be displayed in advertising literature. If any portion of the NOA is displayed, then it shall be done in its entirety.

INSPECTION: A copy of this entire NOA shall be provided to the user by the manufacturer or its distributors and shall be available for inspection at the job site at the request of the Building Official.

This NOA **renews NOA # 12-0614.02** and consists of this page 1 and evidence pages E-1, as well as approval document mentioned above.

The submitted documentation was reviewed by **Ishaq I. Chanda, P.E.**

MIAMI-DADE COUNTY APPROVED

9/4/13

NOTICE OF ACCEPTANCE: EVIDENCE SUBMITTED

A. DRAWINGS

1. Manufacturer's die drawings and sections (submitted under file # **12-0614.02**)
2. Drawing No **W08-37 Rev C**, titled "American" inswing Wood Patio Doors" Sheets 1 through 9 of 9, dated 04-25-08 and last revised on Sep 28, 2012, prepared by Al-Farooq Corporation, signed and sealed by Javad Ahmad, P.E. (Note: This approval is renewal with no change)

B. TESTS (submitted under files #**12-0614.02 / # 08-0603.06**)

1. Test reports on: 1) Air Infiltration Test, per FBC, TAS 202-94
   2) Uniform Static Air Pressure Test, Loading per FBC TAS 202-94
   3) Water Resistance Test, per FBC, TAS 202-94
   4) Large Missile Impact Test per FBC, TAS 201-94
   5) Cyclic Wind Pressure Loading per FBC, TAS 203-94
   6) Forced Entry Test, per FBC 2411 3.2.1, TAS 202-94

   Along with installation diagram of Inswing wood doors & wood doors w/ sidelites & transom marked-up by Hurricane Testing Laboratory, Inc., Test Report No. **HTL-0137-0215.05** dated 02/21-24/05 and **HTL-0137-0328.05** dated 03/30/05, both signed and sealed by Vinu Abraham, P.E.
   Note: The above test reports have been revised by an addendum letter dated 07/30/08, issued by Hurricane Testing, signed and sealed by Vinu Abraham, P.E.
2. Additional test reports on Test reports on
   1) Air Infiltration Test, per FBC, TAS 202-94
   2) Uniform Static Air Pressure Test, Loading per FBC, TAS 202-94
   3) Water Resistance Test, per FBC, TAS 202-94
   4) Large Missile Impact Test per FBC, TAS 201-94
   5) Cyclic Wind Pressure Loading per FBC, TAS 203-94
   6) Forced Entry Test, per FBC 2411 3.2.1 and TAS 202-94

   Along with marked-up drawings and installation diagram of an inswing wood door w/ sidelites, prepared by Fenestration Testing Lab Inc., Test Report No. **FTL 5294 (FTL07083)**, dated 08/21/07, signed and sealed by Carlos S. Roinda, P.E.

C. CALCULATIONS

1. Anchor verification calculations and structural analysis, complying with FBC-2010, prepared by Al Farooq Corporation, dated 05/31/12 and last revised on 10-02-12, signed and sealed by Javad Ahmad, P.E. (submitted under file # **12-0614.02**)

D. QUALITY ASSURANCE

1. Miami Dade Department of Regulatory and Economic Resources (RER).

E. MATERIAL CERTIFICATIONS

1. None.

F. STATEMENTS

1. Statement letter of conformance to FBC 2010, prepared by Al Farooq Corporation, dated 06/14/13, signed and sealed by Javad Ahmad, P.E.
2. Statement letter of conformance FBC 2010 and letter of no financial interest, prepared by Al Farooq Corporation, dated 05/24/12, signed and sealed by Javad Ahmad, P.E.(file # **12-0614.02**)
3. Lab compliance statement, as part of the above referenced test reports.

G. OTHER

1. This NOA **renews** NOA # **12-0614.02**, expiring on OCT 23, 2013.
2. Test proposal dated 05/15/06 approved by BCCO.
3. Assets Purchase Agreement dated Jan 17, 2002 between Hartman Windows & Doors, LLC and Platinum Industries Inc. (submitted under file # **08-0603.06**)

Ishaq I. Chanda

Ishaq I. Chanda, P.E.
Product Control Examiner
NOA No. 13-0627.13
Expiration Date: October 23, 2018
Approval Date: September 12, 2013

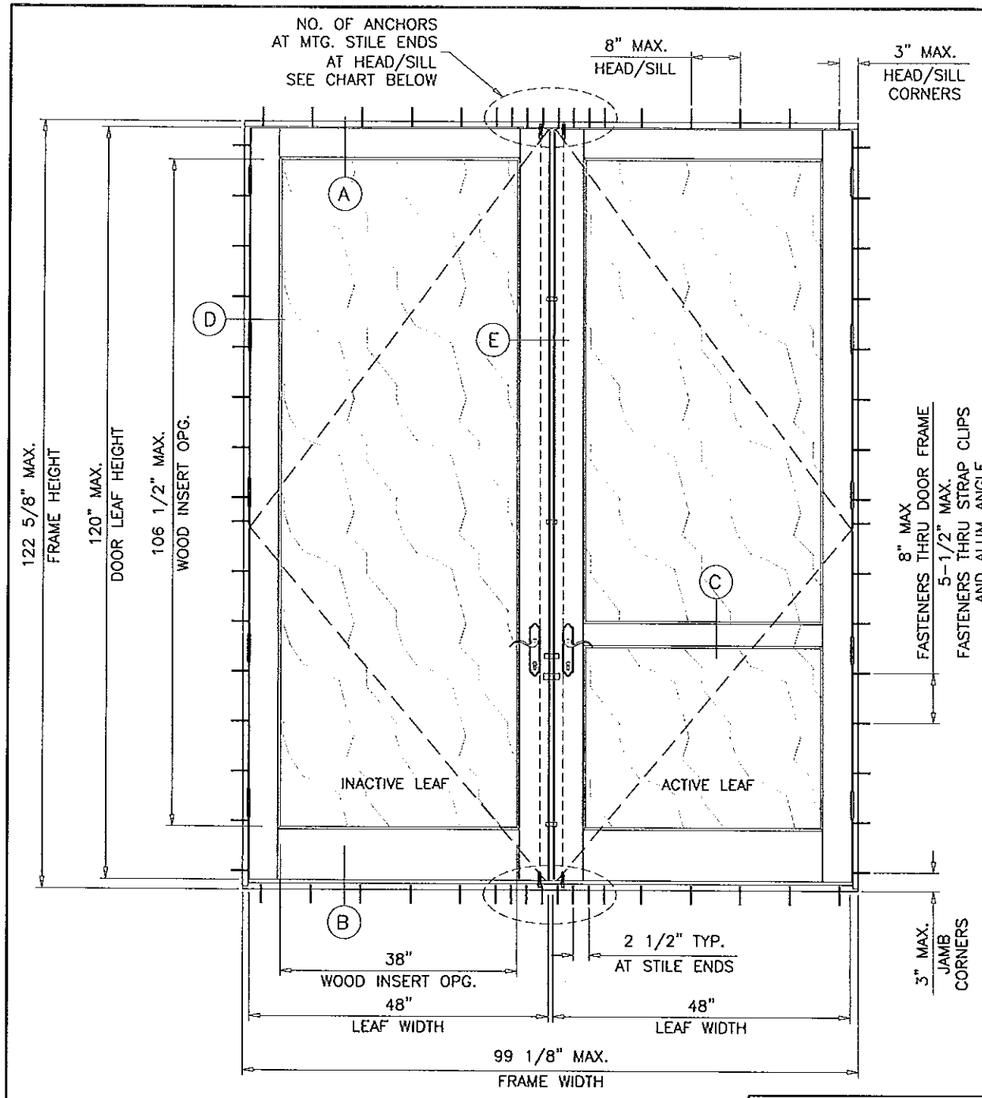

XX

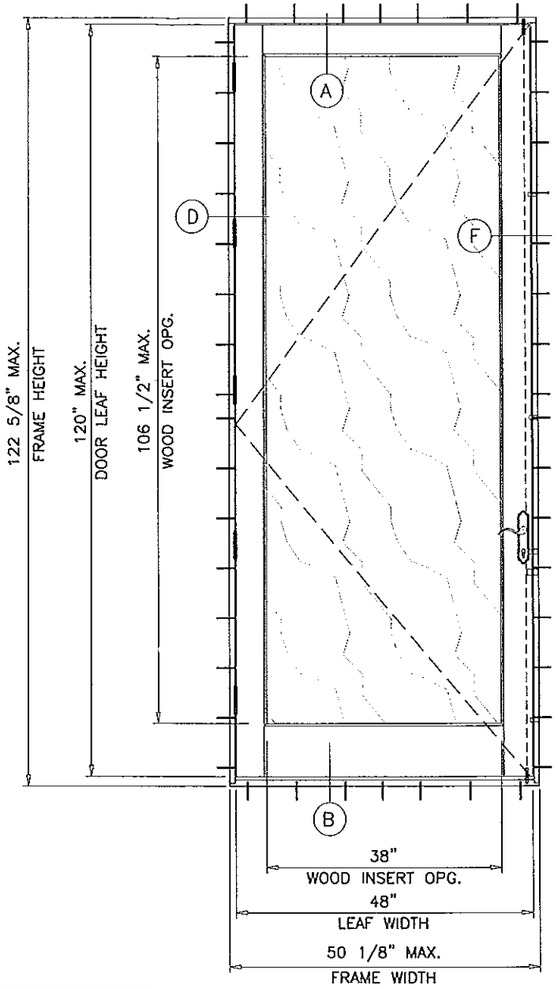

X

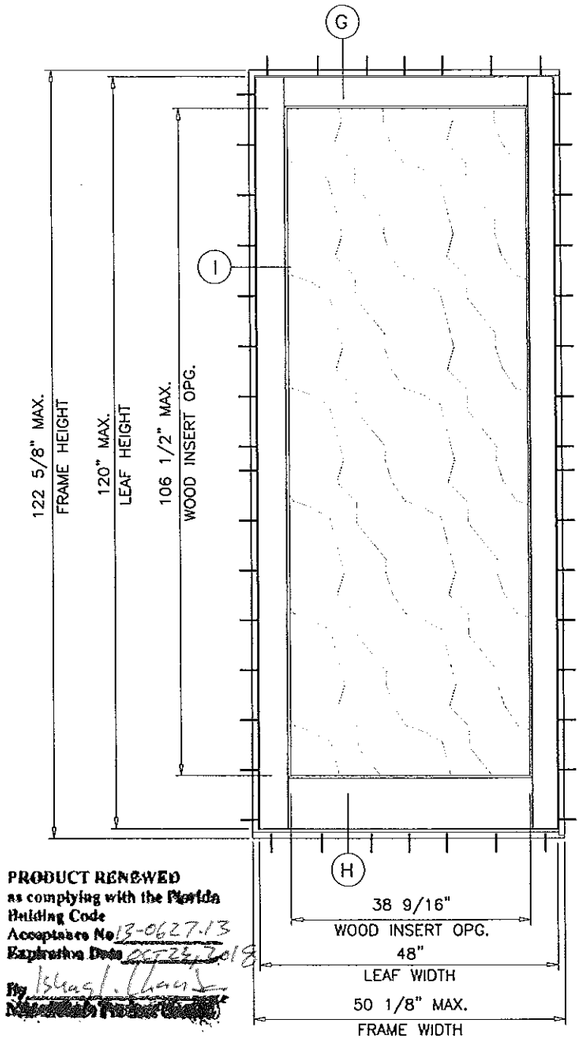

O (FIXED)

PRODUCT RENEWED
as complying with the Florida Building Code
Acceptance No 13-0627.13
Expiration Date 06-22-2018
By Ishaq I. Chaus
Miami-Dade Product Control

PRODUCT REVISED
as complying with the Florida Building Code
Acceptance No 12-0614.02
Expiration Date OCT 23, 2013
By Ishaq I. Chaus
Miami-Dade Product Control

THESE DOORS ARE RATED FOR LARGE MISSILE IMPACT. SHUTTERS ARE NOT REQUIRED.

NUMBER OF ANCHORS AT MTG. STILE ENDS			
MAXIMUM DOOR LEAF HEIGHT	ANCHORS TYPE 'A' THRU DOOR FRAME	ANCHORS TYPE 'B' THRU STRAP CLIP	ANCHORS TYPE 'B' THRU CONT. ANGLE
10 FT.	6	20	7
8 FT.	5	16	6

AMERICAN INSWING WOOD PATIO DOOR

DESIGN LOAD RATINGS FOR SINGLE(X) AND DOUBLE(XX) DOORS TO BE AS PER CHARTS SHOWN IN SHEET 2.
THE SINGLE(X) AND DOUBLE(XX) MAY BE USED IN COMBINATION WITH/WITHOUT SIDELITE AND WITH/WITHOUT TRANSOM (UNDER SEPARATE APPROVALS) WITH HARTMAN CLIPPED/UNCLIPPED WOOD & STEEL MULLION (UNDER SEPARATE APPROVAL) OR MAY BE USED WITH MIAMI-DADE COUNTY APPROVED STAND ALONE CLIPPED MULLION IN BETWEEN.
WHEN DOORS ARE USED IN MULLED COMBINATION, THE LOWER DESIGN PRESSURE FROM DOORS, SIDELITES, TRANSOMS OR MULLION WILL APPLY TO THE ENTIRE SYSTEM, INCLUDING INSTALLATION, TO BE REVIEWED AND APPROVED BY AUTHORITY HAVING JURISDICTION (AHJ).

THIS PRODUCT HAS BEEN DESIGNED AND TESTED TO COMPLY WITH THE REQUIREMENTS OF THE FLORIDA BUILDING CODE INCLUDING HIGH VELOCITY HURRICANE ZONE (HVHZ).

1BY OR 2BY WOOD BUCKS BY OTHERS, MUST BE ANCHORED PROPERLY TO TRANSFER LOADS TO THE STRUCTURE.

ANCHORS SHALL BE AS LISTED, SPACED AS SHOWN ON DETAILS, ANCHORS EMBEDMENT TO BASE MATERIAL SHALL BE BEYOND WALL DRESSING OR STUCCO.

ANCHORING OR LOADING CONDITIONS NOT SHOWN IN THESE DETAILS ARE NOT PART OF THIS APPROVAL.

A LOAD DURATION INCREASE IS USED IN DESIGN OF ANCHORS INTO WOOD ONLY.

MATERIALS INCLUDING BUT NOT LIMITED TO STEEL/METAL SCREWS, THAT COME INTO CONTACT WITH OTHER DISSIMILAR MATERIALS SHALL MEET THE REQUIREMENTS OF THE FLORIDA BLDG. CODE SECTION 2003.8.4.

SOLID WOOD PANELS

Engr: JAVAD AHMAD
CIVIL
FLA. PE # 70592
C.A.N. 3538
SEP 28 2012

AL-FAROOQ CORPORATION
ENGINEERS & PRODUCT DEVELOPMENT
1235 S.W. 87 AVE
MIAMI, FLORIDA 33174
TEL. (305) 264-8100 FAX. (305) 262-6978

COMP-ANL\W08-37HWD

AMERICAN INSWING WOOD PATIO DOOR (L.M.I.)

HARTMAN WINDOWS & DOORS, LLC
531 SOUTHERN BLVD.
WEST PALM BEACH, FL 33405
TEL. (561) 296-9600 FAX. (561) 296-9601

revisions:

no	date	by	description
A	08.28.08		REV. PER BOCO COMMENTS
B	05.16.12		UPDATED TO 2010 FBC
C	09.27.12		REV. PER RER COMMENTS

date: 04-25-08
scale: 1/2"=1'-0"
dr. by: HAMID
chk. by:

drawing no. W08-37

sheet 1 of 9

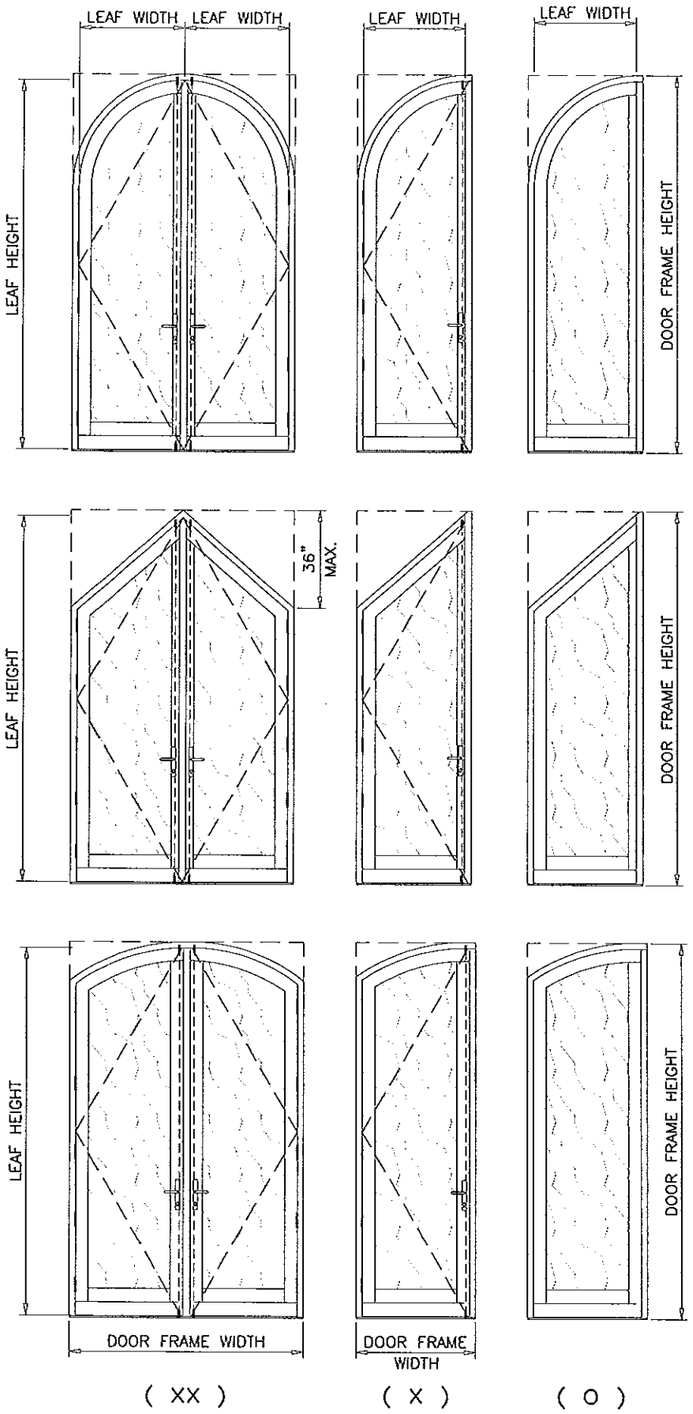

DESIGN LOAD CAPACITY - PSF ARCH TOP DOORS			
NOMINAL DIMS.		1-3/4" THK. WOOD INSERT	
LEAF WIDTH INCHES	LEAF HEIGHT INCHES	EXT.(+)	INT.(-)
36	84	70.0	70.0
	96	70.0	70.0
	108	70.0	70.0
	120	70.0	70.0

DOOR FRAME HEIGHT = LEAF HEIGHT + 2.625
DOOR FRAME WIDTH (SINGLE) = LEAF WIDTH + 2.125
DOOR FRAME WIDTH (DOUBLE) = (LEAF WIDTH)2 + 3.125

PRODUCT RENEWED
as complying with the Florida Building Code
Acceptance No 13-0627.13
Expiration Date 10/23/18
By Ishaq I. Chunde
Product Control

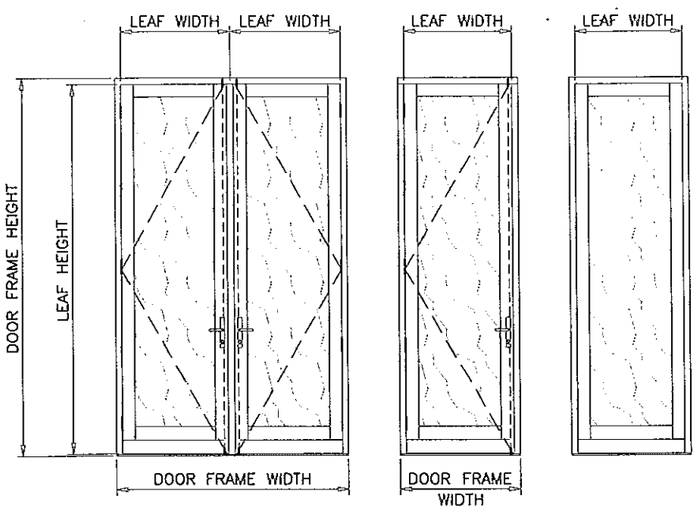

DESIGN LOAD CAPACITY - PSF RECTANGLE DOORS			
NOMINAL DIMS.		1-3/4" THK. WOOD INSERT	
LEAF WIDTH INCHES	LEAF HEIGHT INCHES	EXT.(+)	INT.(-)
36	84	70.0	70.0
	96	70.0	70.0
	108	70.0	70.0
	120	70.0	70.0
42	84	70.0	70.0
	96	70.0	70.0
	108	70.0	70.0
	120	70.0	70.0
48	84	70.0	70.0
	96	70.0	70.0
	108	70.0	70.0
	120	70.0	70.0

DOORS CAN BE INSTALLED WITH ANY OF THE FOLLOWING OPTIONS

OPTION 1: BY USING FASTENERS THRU DOOR FRAME.
OPTION 2: BY USING FASTENERS THRU STRAP CLIPS.
OPTION 3: BY USING FASTENERS THRU CONT. ALUM ANGLE.

SEE ELEVATIONS FOR SPACING
SEE SHEETS 4 THRU 7 FOR DETAILS.

PRODUCT REVISED
as complying with the Florida Building Code
Acceptance No 12-06/4.02
Expiration Date 10/23/13
By Ishaq I. Chunde
Product Control

FOR DESCRIPTION AND LOCATION OF LOCKS AND HINGES SEE SHEET 3.

ALLOWABLE LOADS FOR ALTERNATE SHAPES AS SHOWN ABOVE OR SIMILAR CAN BE VERIFIED BY INSCRIBING DOOR SHAPE WITHIN RECTANGLE AS SHOWN IN DOTTED LINES AND OBTAINING ALLOWABLE LOADS FROM THOSE SHAPES.

Engr: JAVAD AHMAD
CIVIL
FLA. PE # 70592
C.A.N. 3538

SEP 28 2012

AL-FAROOQ CORPORATION
ENGINEERS & PRODUCT DEVELOPMENT
1235 S.W. 87 AVE
MIAMI, FLORIDA 33174
TEL. (305) 264-8100 FAX. (305) 262-6978

COMP-ANL\W08-37HWD

AMERICAN INSWING WOOD PATIO DOOR (L.M.I.)

HARTMAN WINDOWS & DOORS, LLC
531 SOUTHERN BLVD.
WEST PALM BEACH, FL 33405
TEL. (561) 296-9600 FAX. (561) 296-9601

revisions:

no	date	by	description
A	08.28.08		REV. PER BCCO COMMENTS
B	05.16.12		NO CHANGE THIS SHEET
C	09.27.12		REV. PER RER COMMENTS

date: 04-25-08
scale: 1/2"=1'-0"
dr. by: HAMID
chk. by:

drawing no.
W08-37

sheet 2 of 9

SEALANT:

ALL JOINTS SEALED WITH SONNEBORN NP 1 POLYURETHANE SEALANT.

HINGES:

4-1/2" X 4-1/2" ST. STEEL BUTT HINGES
AT 12" FROM TOP AND BOTTOM AND 25" O.C. MAX.
EACH FASTENED TO
FRAME WITH (4) #12 X 7/8" FH SMS
LEAF WITH (4) #12 X 2-1/2" FH WOOD SCREWS

LOCKS:

SINGLE LEAF DOORS

7 POINT LOCKING SYSTEM GU UF8-625 WITH
SHOOT BOLTS ENGAGING SIMULTANEOUSLY AT HEAD & SILL
ACTUATING HANDLE AT 34" FROM BOTTOM.
LOCK FASTENED WITH SINGLE ROW OF (20) #8 X 1-3/4" SMS
(3) 3-3/4" LONG METALLIC STRIKE PLATES AT FRAME JAMB
AT 9", 57-1/2" AND 90" FROM BOTTOM
EACH FASTENED WITH (2) #8 X 3/4" FH SMS
(1) 8" LONG METALLIC STRIKE PLATE AT FRAME JAMB
AT 34-3/4" FROM BOTTOM
FASTENED WITH (3) #8 X 3/4" FH SMS

DOUBLE LEAF DOORS

ACTIVE LEAF:

7 POINT LOCKING SYSTEM GU UF8-625 WITH
SHOOT BOLTS ENGAGING SIMULTANEOUSLY AT HEAD & SILL
ACTUATING HANDLE AT 34" FROM BOTTOM.
LOCK FASTENED WITH SINGLE ROW OF (20) #8 X 1-3/4" SMS
(3) 3-3/4" LONG METALLIC STRIKE PLATES AT INACTIVE LEAF
AT 9", 57-1/2" AND 90" FROM BOTTOM
EACH FASTENED WITH (2) #8 X 3/4" FH SMS
(1) 8" LONG METALLIC STRIKE PLATE AT INACTIVE LEAF
AT 34-3/4" FROM BOTTOM
FASTENED WITH (3) #8 X 3/4" FH SMS
(1) 3-1/4" LONG METALLIC STRIKE PLATE IN FRAME SILL
AT FLUSH BOLT LOCATION
FASTENED WITH (3) #8 X 1-3/4" FH SMS

IN-ACTIVE LEAF:

2 POINT LOCK SYSTEM WITH SHOOT BOLTS ENGAGING
SIMULTANEOUSLY AT HEAD & SILL
ACTUATING HANDLE AT 34" FROM BOTTOM
(1) 3-1/4" LONG METALLIC STRIKE PLATE IN FRAME SILL
AT FLUSH BOLT LOCATION
FASTENED WITH (3) #8 X 1-3/4" FH SMS

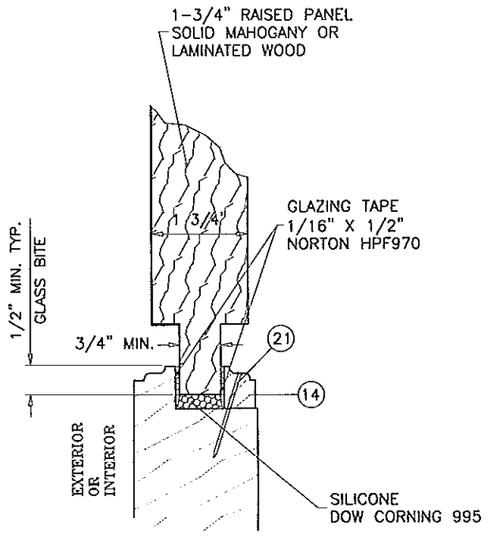

GLAZING DETAIL

PRODUCT RENEWED
as complying with the Florida
Building Code
Acceptance No 13-0627.13
Expiration Date 10/23/18
By Ishaq I. Ghauri
Miami-Dade Product Control

PRODUCT REVISED
as complying with the Florida
Building Code
Acceptance No 12-0614.02
Expiration Date 10/23/13
By Ishaq I. Ghauri
Miami-Dade Product Control

Engr: JAVAD AHMAD
CIVIL
FLA. PE # 70592
C.A.N. 3538

SEP 28 2012

AL-FAROOQ CORPORATION
ENGINEERS & PRODUCT DEVELOPMENT
1235 S.W. 87 AVE
MIAMI, FLORIDA 33174
TEL. (305) 264-8100 FAX. (305) 262-6978
COMP-ANL\W08-37HWD

AMERICAN INSWING WOOD PATIO DOOR (L.M.I.)

HARTMAN WINDOWS & DOORS, LLC
531 SOUTHERN BLVD.
WEST PALM BEACH, FL 33405
TEL. (561) 296-9600 FAX. (561) 296-9601

revisions:

no	date	by	description
A	08.28.08		REV. PER BCCO COMMENTS
B	05.16.12		NO CHANGE THIS SHEET
C	09.27.12		NO CHANGE THIS SHEET

date: 04-25-08
scale: 3/8" = 1"
dr. by: HAMID
chk. by:

drawing no.
W08-37

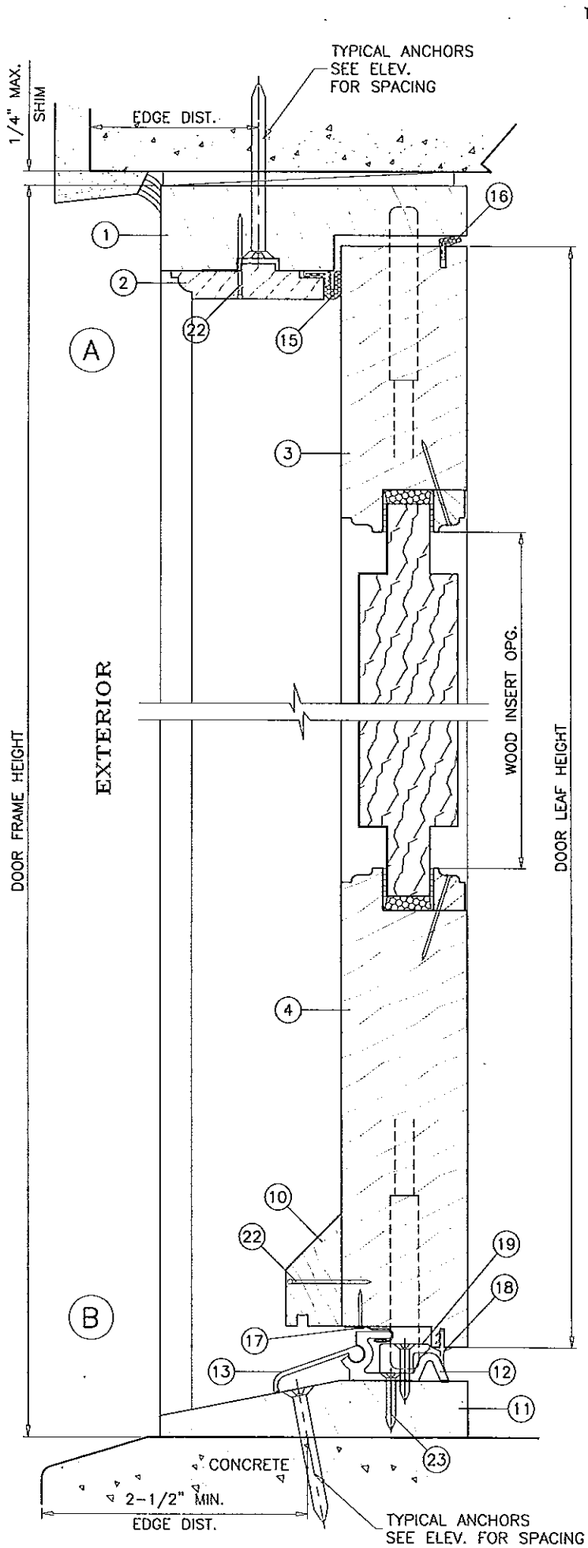

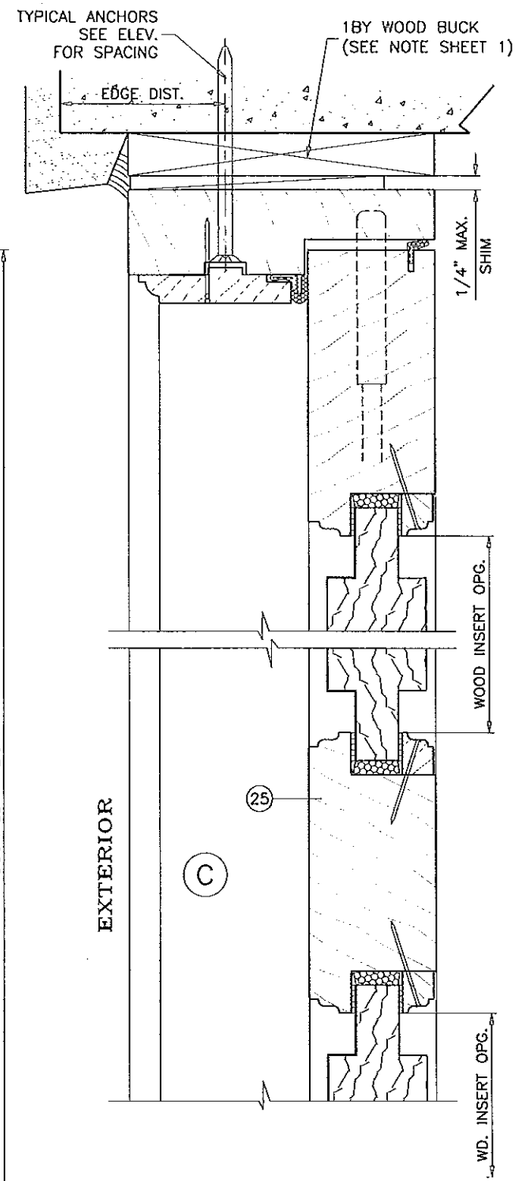

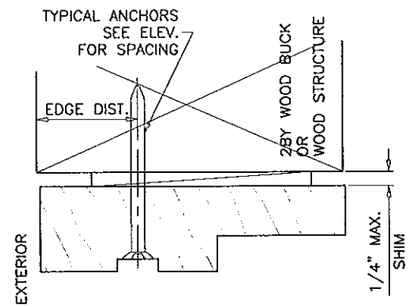

TYPICAL ANCHORS: SEE ELEV. FOR SPACING

ANCHORS THRU DOOR FRAME

A: 1/4" DIA. ULTRACON BY 'ELCO' (Fu=177 KSI, Fy=155 KSI)

INTO 2BY WOOD BUCKS OR WOOD STRUCTURES
1-1/2" MIN. PENETRATION INTO WOOD

THRU 1BY BUCKS INTO CONC. OR MASONRY
1-1/4" MIN. EMBED INTO CONC. OR MASONRY

DIRECTLY INTO CONC. OR MASONRY
1-1/4" MIN. EMBED INTO CONC. OR MASONRY

ANCHORS THRU STRAP CLIPS & ALUM ANGLE (SEE SHEET 7 FOR DETAILS)

B: #10 SMS OR SELF DRILLING SCREWS (GRADE 2 CRS)

INTO 2BY WOOD BUCKS OR WOOD STRUCTURE
1-1/2" MIN. PENETRATION INTO WOOD

ANCHOR EDGE DISTANCES

INTO CONCRETE AND MASONRY = 2" MIN. (UNLESS SPECIFIED)
INTO WOOD STRUCTURE = 1" MIN. (UNLESS SPECIFIED)

ANCHORS CL TO CL DISTANCE

INTO CONCRETE AND MASONRY = 3" MIN.
INTO WOOD STRUCTURE = 1" MIN.

CONCRETE AT HEAD, SILL OR JAMBS f'c = 3000 PSI MIN.
C-90 HOLLOW/FILLED BLOCK AT JAMBS f'm = 2000 PSI MIN.

PRODUCT RENEWED
as complying with the Florida Building Code
Acceptance No 12-0623.13
Expiration Date 10/23/13
By Ishaq I. Chanda
Product Control

PRODUCT REVISED
as complying with the Florida Building Code
Acceptance No 12-0614.02
Expiration Date 10/23/13
By Ishaq I. Chanda
Product Control

WOOD BUCKS NOT BY HARTMAN WINDOWS, MUST SUSTAIN LOADS IMPOSED BY GLAZING SYSTEM AND TRANSFER THEM TO THE BUILDING STRUCTURE.

Engr: JAVAD AHMAD
CIVIL
FLA. PE # 70592
C.A.N. 3538
SEP 28 2012

AL-FAROOQ CORPORATION
ENGINEERS & PRODUCT DEVELOPMENT
1235 S.W. 87 AVE
MIAMI, FLORIDA 33174
TEL. (305) 264-8100 FAX. (305) 262-6978
COMP-ANL\W08-37HWD

AMERICAN INSWING WOOD PATIO DOOR (L.M.I.)

HARTMAN WINDOWS & DOORS, LLC
531 SOUTHERN BLVD.
WEST PALM BEACH, FL 33405
TEL. (561) 296-9600 FAX. (561) 296-9601

revisions:

no	date	by	description
A	08.28.08		REV. PER BCCO COMMENTS
B	05.16.12		UPDATED TO 2010 FBC
C	09.27.12		REV. PER RER COMMENTS

date: 04-25-08
scale: 3/8" = 1"
dr. by: HAMID
chk. by:

drawing no.
W08-37

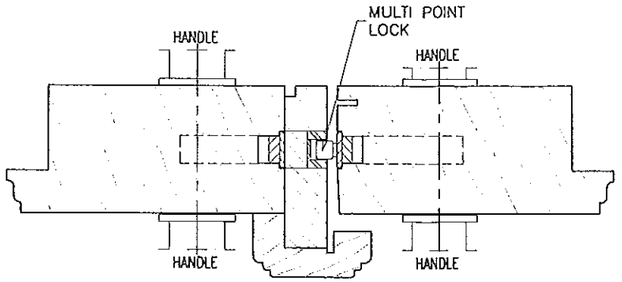

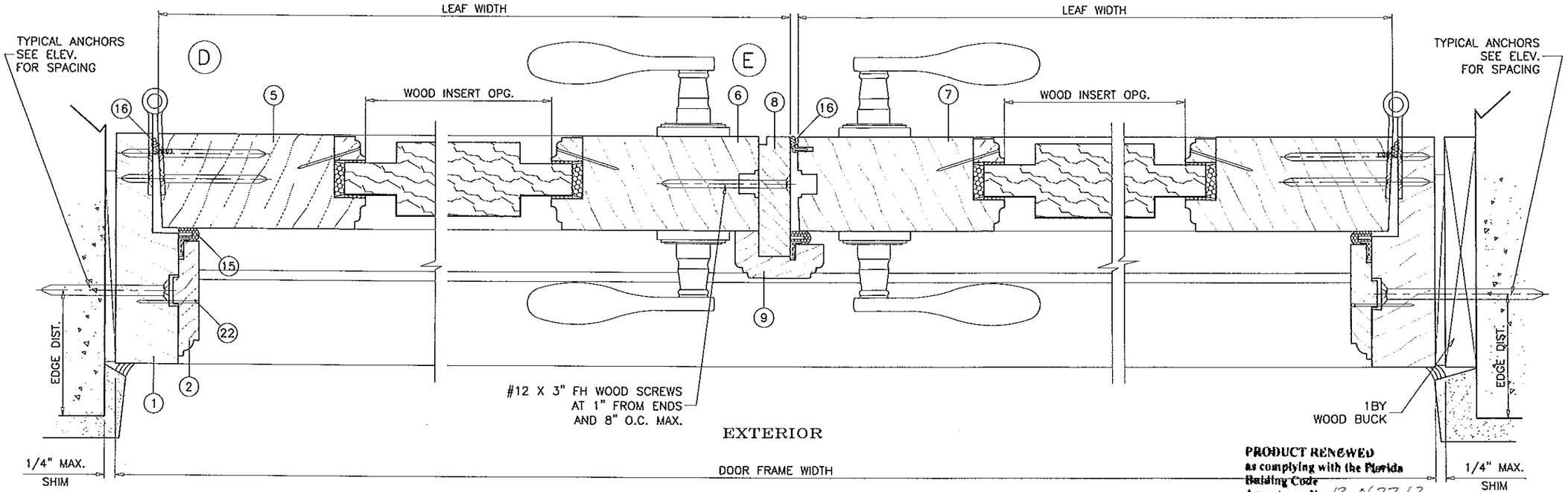

EXTERIOR

PRODUCT RENEWED
as complying with the Florida Building Code
Acceptance No 13-0627.13
Expiration Date 10/23/18
By Ishaq I. Chan
Product Control

PRODUCT REVISED
as complying with the Florida Building Code
Acceptance No 12-0614.02
Expiration Date 10/23/13
By Ishaq I. Chan
Product Control

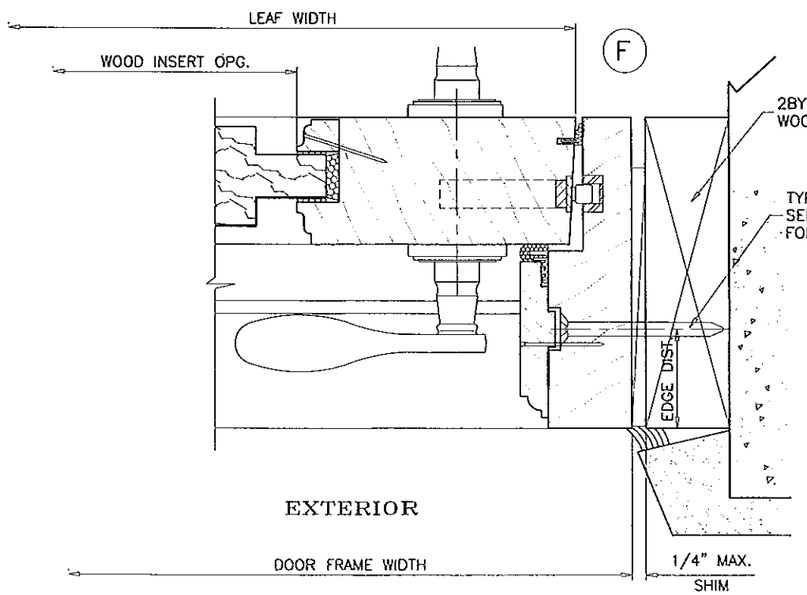

EXTERIOR

Engr: JAVAD AHMAD
CIVIL
FLA. PE # 70592
C.A.N. 3538

SEP 28 2012

AL-FAROOQ CORPORATION
ENGINEERS & PRODUCT DEVELOPMENT
1235 S.W. 87 AVE
MIAMI, FLORIDA 33174
TEL. (305) 264-8100 FAX. (305) 262-6978

COMP-ANL\W08-37HWD

AMERICAN INSWING WOOD PATIO DOOR (L.M.I.)

HARTMAN WINDOWS & DOORS, LLC
531 SOUTHERN BLVD.
WEST PALM BEACH, FL 33405
TEL. (561) 296-9600 FAX. (561) 296-9601

revisions:

no	date	by	description
A	08.28.08		REV. PER BCCO COMMENTS
B	05.16.12		NO CHANGE THIS SHEET
C	09.27.12		REV. PER RER COMMENTS

date: 04-25-08
scale: 3/8" = 1"
dr. by: HAMID
chk. by:

drawing no.
W08-37

sheet 5 of 9

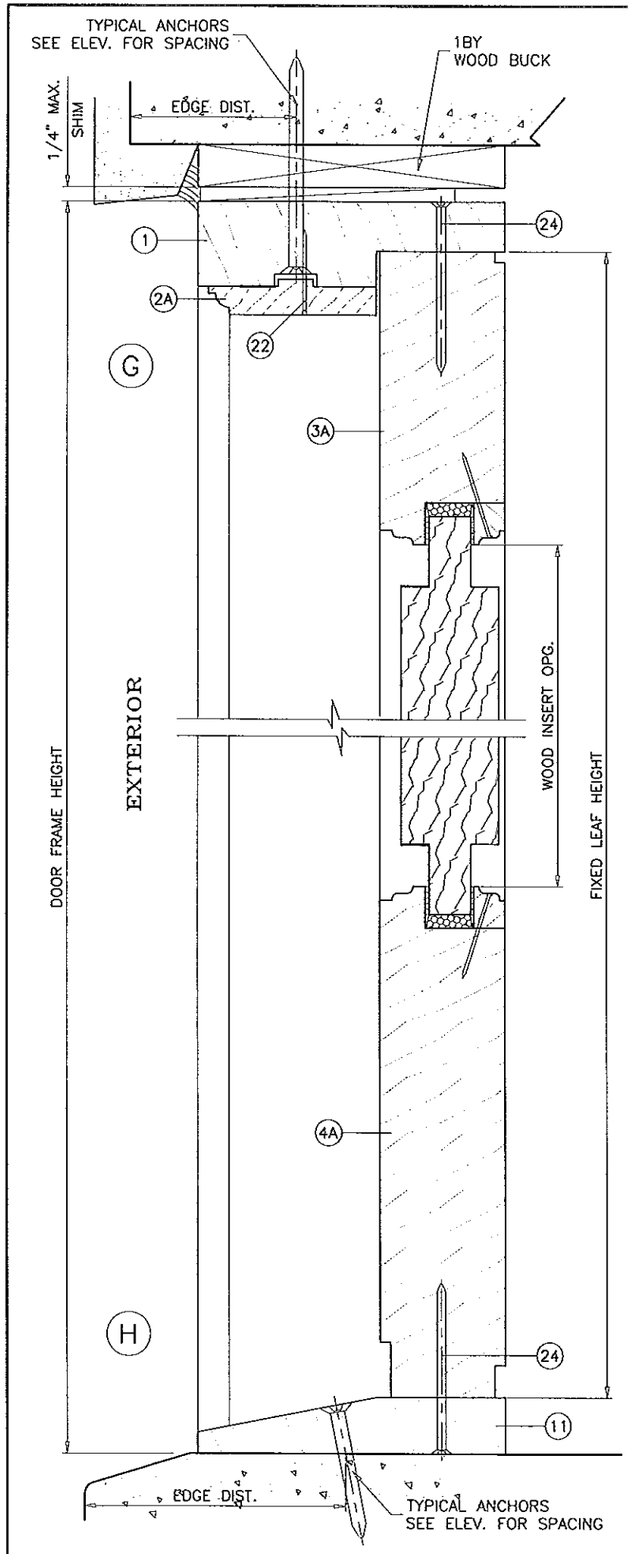

ITEM #	PART #	REQD.	DESCRIPTION	MATERIAL	MANF./SUPPLIER/REMARKS
1	–	3/ DOOR	FRAME HEAD/JAMB	WOOD	MAHOGANY
2	–	3/ DOOR	EXTERIOR DOOR STOP (OPERATING)	WOOD	MAHOGANY
2A	–	3/ DOOR	EXTERIOR DOOR STOP (STATIONARY)	WOOD	MAHOGANY
3	–	2/ LEAF	TOP RAIL (ACTIVE)	WOOD	MAHOGANY
3A	–	2/ LEAF	TOP RAIL (STATIONARY)	WOOD	MAHOGANY
3B	–	2/ LEAF	TOP RAIL (INSUL. LAM. GLASS)	WOOD	MAHOGANY
4	–	1/ LEAF	BOTTOM RAIL (ACTIVE)	WOOD	MAHOGANY
4A	–	1/ LEAF	BOTTOM RAIL (STATIONARY)	WOOD	MAHOGANY
4B	–	1/ LEAF	BOTTOM RAIL (INSUL. LAM. GLASS)	WOOD	MAHOGANY
5	–	1/ LEAF	HINGE STILE / LOCK STILE	WOOD	MAHOGANY
6	–	1/ LEAF	INACTIVE LEAF MEETING STILE	WOOD	MAHOGANY
7	–	1/ LEAF	ACTIVE LEAF MEETING STILE	WOOD	MAHOGANY
8	–	AS REQD.	ASTRAGAL	WOOD	MAHOGANY
9	–	AS REQD.	ASTRAGAL COVER	WOOD	MAHOGANY
10	–	1/ LEAF	DRIP CAP	WOOD	MAHOGANY
11	–	1	FRAME SILL	WOOD	MAHOGANY
12	–	1	THRESHOLD	BRONZE	–
13	–	1	THRESHOLD EXTENSION	BRONZE	–
14	–	AS REQD.	GLAZING STOP	WOOD	MAHOGANY
15	QDS-650	AS REQD.	Q-LON WEATHERSEAL GASKET	–	SCHLEGEL
16	QEZ-320	AS REQD.	Q-LON WEATHERSEAL GASKET	–	SCHLEGEL
17	21B	AS REQD.	HOOK W'STRIPPING	BRONZE	ACCURATE
18	P880	AS REQD.	WEATHERSEAL GASKET	VINYL	GU
19	–	1	STRIKE PLATE	BRASS	–
20	–	–	–	–	–
21	–	AS REQD.	18 GA. X 1-1/2" BRAD NAILS	–	2" FROM ENDS & 12" O.C.
22	–	AS REQD.	18 GA. X 1-1/4" BRAD NAILS	–	3" FROM ENDS & 8" O.C.
23	#8 X 1"	–	FH WOOD SCREWS	–	3" FROM ENDS & 9" O.C.
24	#10 X 3"	–	FH WOOD SCREWS	–	3" FROM ENDS & 9" O.C.
25	–	AS REQD.	MID RAIL/STILE	WOOD	MAHOGANY

SEE SHEET 3 FOR LOCK AND FLUSH BOLT DESCRIPTION

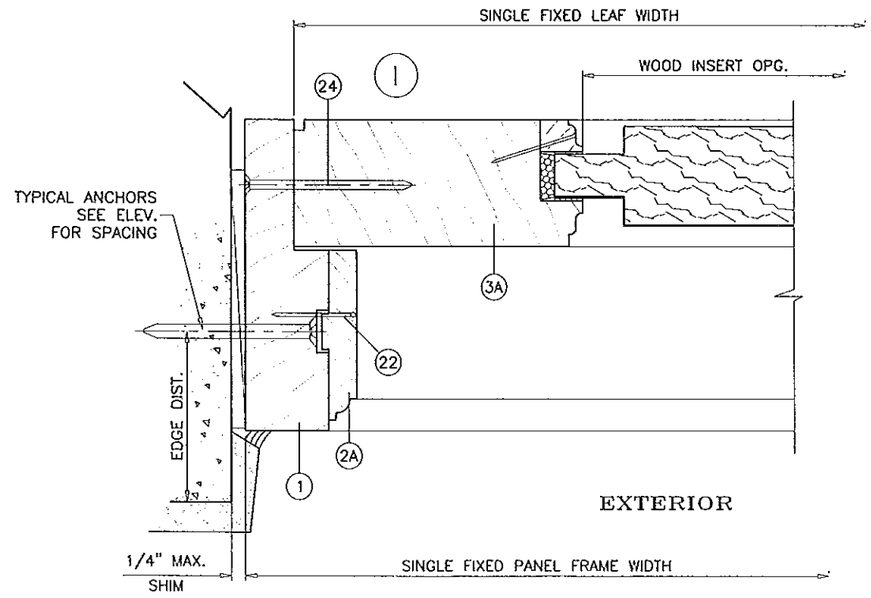

PRODUCT RENEWED
as complying with the Florida
Building Code
Acceptance No 13-0627.13
Expiration Date 10/23/18
By Ishaq I. Chanda
Miami-Dade Product Control

PRODUCT REVISED
as complying with the Florida
Building Code
Acceptance No 12-0614.02
Expiration Date 10/23/12
By Ishaq I. Chanda
Miami-Dade Product Control

Engr: JAVAD AHMAD
CIVIL
FLA. PE # 70592
C.A.N. 3538
SEP 28 2012

AL-FAROOQ CORPORATION
ENGINEERS & PRODUCT DEVELOPMENT
1235 S.W. 87 AVE
MIAMI, FLORIDA 33174
TEL. (305) 264-8100 FAX. (305) 262-6978

COMP-ANL\W08-37HWD

AMERICAN INSWING WOOD PATIO DOOR (L.M.I.)

HARTMAN WINDOWS & DOORS, LLC
531 SOUTHERN BLVD.
WEST PALM BEACH, FL 33405
TEL. (561) 296-9600 FAX. (561) 296-9601

revisions:

no	date	by	description
A	08.28.08		REV. PER BCCO COMMENTS
B	05.16.12		NO CHANGE THIS SHEET
C	09.27.12		REV. PER RER COMMENTS

date: 04-25-08
scale: 3/8" = 1"
dr. by: HAMID
chk. by:

drawing no.
W08-37

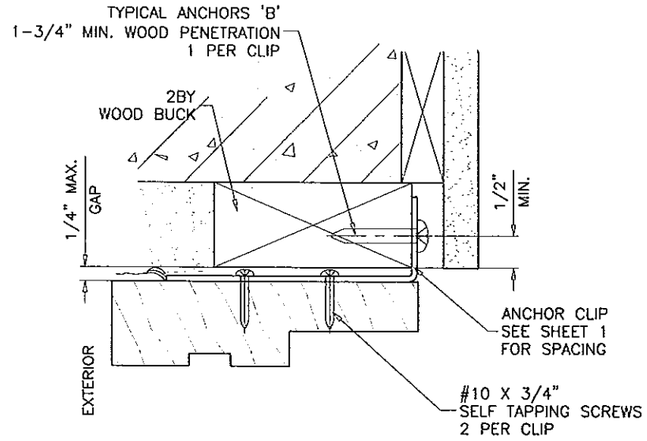

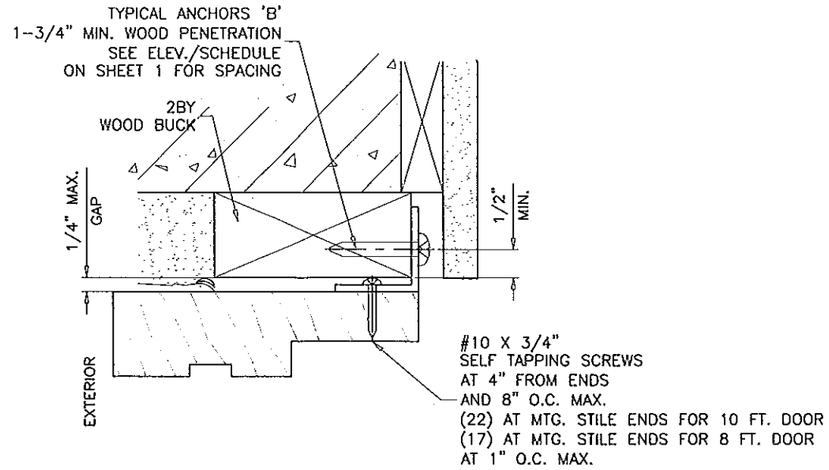

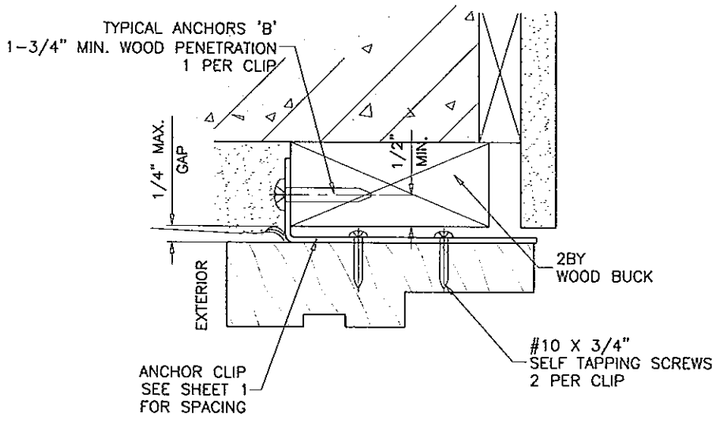

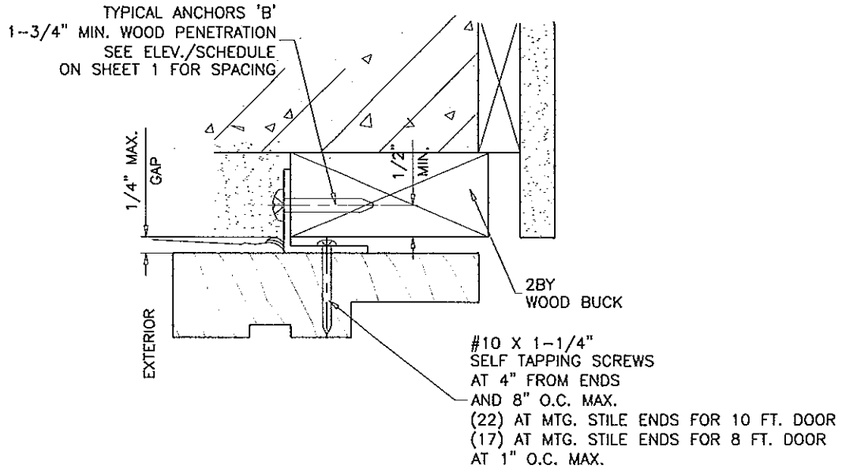

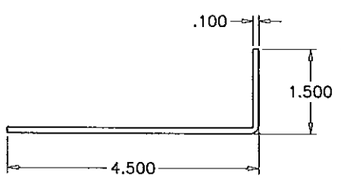

STRAP CLIP, 1-3/8" LONG
GALV. STEEL (Fy = 33000 PSI)

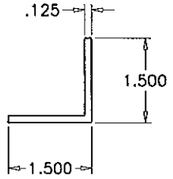

ALUMINUM ANGLE CONT.
(6063-T6)

PRODUCT RENEWED
as complying with the Florida
Building Code
Acceptance No 13-0622.13
Expiration Date 10/23/18
By _____
Product Control

PRODUCT REVISED
as complying with the Florida
Building Code
Acceptance No 12-0614.02
Expiration Date 10/23/13
By _____
Product Control

APPLICATIONS IN WOOD SUBSTRATE OR WOOD STRUCTURE ONLY

Engr: JAVAD AHMAD
CIVIL
FLA. PE # 70592
C.A.N. 3538

SEP 28 2012

AL-FAROOQ CORPORATION
ENGINEERS & PRODUCT DEVELOPMENT
1235 S.W. 87 AVE
MIAMI, FLORIDA 33174
TEL. (305) 264-8100 FAX. (305) 262-6978
COMP-ANL\W08-37HWD

AMERICAN INSWING WOOD PATIO DOOR (L.M.I.)

HARTMAN WINDOWS & DOORS, LLC
531 SOUTHERN BLVD.
WEST PALM BEACH, FL 33405
TEL. (561) 296-9600 FAX. (561) 296-9601

revisions:

no	date	by	description
A	08.28.08		REV. PER BCCO COMMENTS
B	05.16.12		UPDATED TO 2010 FBC
C	09.27.12		REV. PER RER COMMENTS

date: 04-25-08
scale: 3/8" = 1"
dr. by: HAMID
chk. by:

drawing no.
W08-37

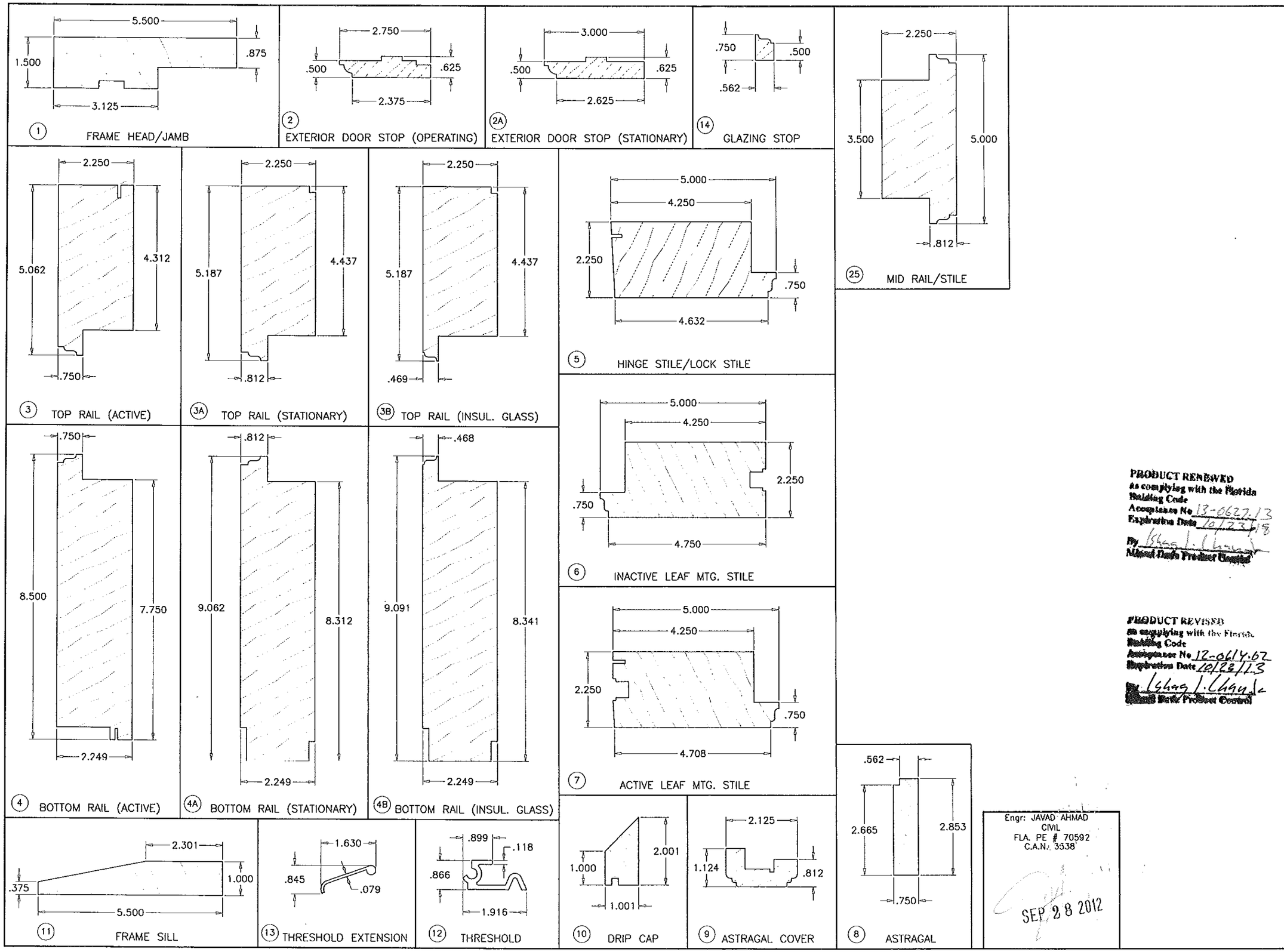

PRODUCT RENEWED
as complying with the Florida
Building Code
Acceptance No 13-0627.13
Expiration Date 10/23/18
By Ishag I. Chaudhary
Miami Dade Product Control

PRODUCT REVISED
as complying with the Florida
Building Code
Acceptance No 12-0614.02
Expiration Date 10/23/13
By Ishag I. Chaudhary
Miami Dade Product Control

Engr: JAVAD AHMAD
CIVIL
FLA. PE # 70592
C.A.N. 3538

SEP 28 2012

AL-FAROOQ CORPORATION
ENGINEERS & PRODUCT DEVELOPMENT
1235 S.W. 87 AVE
MIAMI, FLORIDA 33174
TEL. (305) 264-8100 FAX. (305) 262-6978
COMP-ANL\W08-37HWD

AMERICAN INSWING WOOD PATIO DOOR (L.M.I.)

HARTMAN WINDOWS & DOORS, LLC
531 SOUTHERN BLVD.
WEST PALM BEACH, FL 33405
TEL. (561) 296-9600 FAX. (561) 296-9601

revisions:

no	date	by	description
A	08.28.08		NO CHANGE THIS SHEET
B	05.16.12		NO CHANGE THIS SHEET
C	09.27.12		NO CHANGE THIS SHEET

date: 04-25-08
scale: 3/8" = 1"
dr. by: HAMID
chk. by:

drawing no.
W08-37

sheet 8 of 9

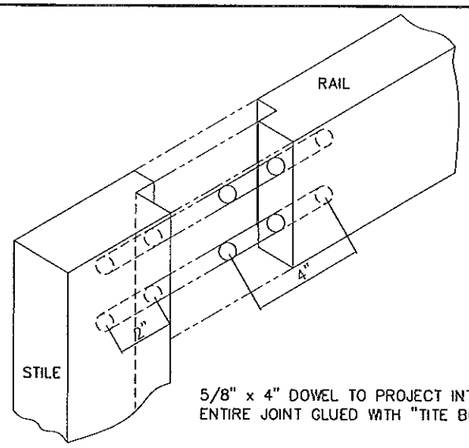

5/8" x 4" DOWEL TO PROJECT INTO STILE.
ENTIRE JOINT GLUED WITH "TITE BOND".

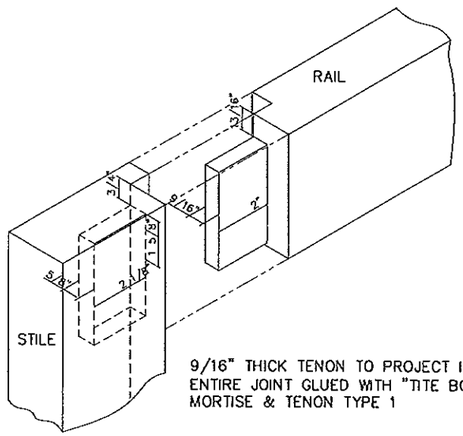

9/16" THICK TENON TO PROJECT INTO STILE.
ENTIRE JOINT GLUED WITH "TITE BOND"
MORTISE & TENON TYPE 1

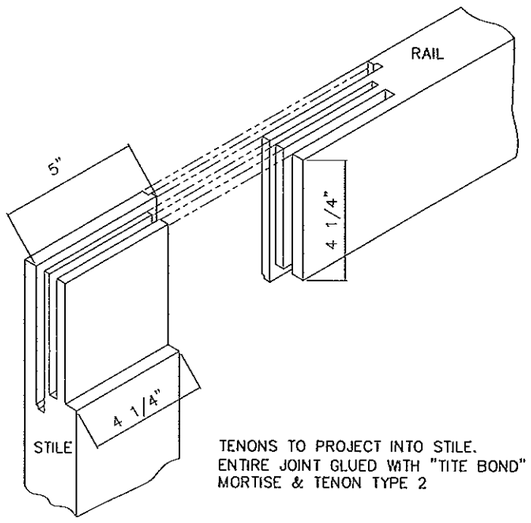

TENONS TO PROJECT INTO STILE.
ENTIRE JOINT GLUED WITH "TITE BOND"
MORTISE & TENON TYPE 2

PANEL CORNER DETAILS

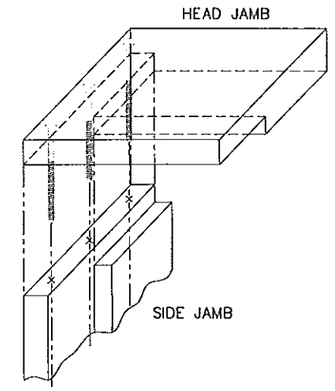

FRAME CORNERS HAVE HALF LAP JOINT
TYPICAL AT HEAD AND SILL
WITH (3) #12 x 3 1/2" SS SCREWS AND
GLUED WITH NP1 POLYURETHANE SEALANT.

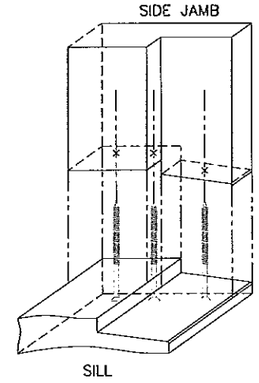

FRAME CORNER DETAILS

PRODUCT RENEWED
as complying with the Florida
Building Code
Acceptance No 12-0627.13
Expiration Date OCT 23, 2018
By Ishaq I. Chanda
Miami-Dade Product Control

PRODUCT REVISED
as complying with the Florida
Building Code
Acceptance No 12-0614.02
Expiration Date OCT 23, 2013
By Ishaq I. Chanda
Miami-Dade Product Control

Engr: JAVAD AHMAD
CIVIL
FLA. PE # 70592
C.A.N. 3538

SEP 28 2012

AL-FAROOQ CORPORATION
ENGINEERS & PRODUCT DEVELOPMENT
1235 S.W. 87 AVE
MIAMI, FLORIDA 33174
TEL (305) 264-8100 FAX. (305) 262-6978
COMP-ANL\W08-37HWD

AMERICAN INSWING WOOD PATIO DOOR (L.M.I.)

HARTMAN WINDOWS & DOORS, LLC
531 SOUTHERN BLVD.
WEST PALM BEACH, FL 33405
TEL. (561) 296-9600 FAX. (561) 296-9601

revisions:

no	date	by	description
A	08.28.08		REV. PER BCCO COMMENTS
B	05.16.12		NO CHANGE THIS SHEET
C	09.27.12		NO CHANGE THIS SHEET

date: 04-25-08
scale: 3/8" = 1"
dr. by: HAMID
chk. by:

drawing no.
W08-37

sheet 9 of 9