MIAMI-DADE COUNTY
DEPARTMENT OF REGULATORY AND ECONOMIC RESOURCES (RER)
BOARD AND CODE ADMINISTRATION DIVISION

MIAMI-DADE COUNTY
PRODUCT CONTROL SECTION
11805 SW 26 Street, Room 208
T (786) 315-2590 F (786) 315-2599
www.miamidade.gov/economy

NOTICE OF ACCEPTANCE (NOA)

Gopi Glass Sales & Services Corp.
7450 NW 41st Street
Miami, FL 33166

SCOPE:

This NOA is being issued under the applicable rules and regulations governing the use of construction materials. The documentation submitted has been reviewed and accepted by Miami-Dade County RER - Product Control Section to be used in Miami Dade County and other areas where allowed by the Authority Having Jurisdiction (AHJ).

This NOA shall not be valid after the expiration date stated below. The Miami-Dade County Product Control Section (In Miami Dade County) and/or the AHJ (in areas other than Miami Dade County) reserve the right to have this product or material tested for quality assurance purposes. If this product or material fails to perform in the accepted manner, the manufacturer will incur the expense of such testing and the AHJ may immediately revoke, modify, or suspend the use of such product or material within their jurisdiction. RER reserves the right to revoke this acceptance, if it is determined by Miami-Dade County Product Control Section that this product or material fails to meet the requirements of the applicable building code.

This product is approved as described herein, and has been designed to comply with the Florida Building Code, including the High Velocity Hurricane Zone.

DESCRIPTION: Series "4500 Flush Glazed" Aluminum Storefront System – N.I.

APPROVAL DOCUMENT: Drawing No. **97-38**, titled "Series 4500 Alum. Flush Glazed System (N.I.)", sheets 1 through 7 of 7, dated 10/15/97, with revision E dated 02/23/12, prepared by Al-Farooq Corporation, signed and sealed by Javad Ahmad, P.E., bearing the Miami-Dade County Product Control Renewal stamp with the Notice of Acceptance number and expiration date by the Miami–Dade County Product Control Section.

MISSILE IMPACT RATING: None

LABELING: Each unit shall bear a permanent label with the manufacturer's name or logo, city, state, model/series, and following statement: "Miami-Dade County Product Control Approved", unless otherwise noted herein.

RENEWAL of this NOA shall be considered after a renewal application has been filed and there has been no change in the applicable building code negatively affecting the performance of this product.

TERMINATION of this NOA will occur after the expiration date or if there has been a revision or change in the materials, use, and/or manufacture of the product or process. Misuse of this NOA as an endorsement of any product, for sales, advertising or any other purposes shall automatically terminate this NOA. Failure to comply with any section of this NOA shall be cause for termination and removal of NOA.

ADVERTISEMENT: The NOA number preceded by the words Miami-Dade County, Florida, and followed by the expiration date may be displayed in advertising literature. If any portion of the NOA is displayed, then it shall be done in its entirety.

INSPECTION: A copy of this entire NOA shall be provided to the user by the manufacturer or its distributors and shall be available for inspection at the job site at the request of the Building Official.

This NOA **renews NOA# 12-0315.06** and consists of this page 1 and evidence pages E-1 and E-2, as well as approval document mentioned above.

The submitted documentation was reviewed by **Manuel Perez, P.E.**

MIAMI-DADE COUNTY APPROVED

10/16/13

NOA No. 13-0708.06
Expiration Date: December 04, 2018
Approval Date: October 24, 2013

NOTICE OF ACCEPTANCE: EVIDENCE SUBMITTED

A. DRAWINGS

1. Manufacturer's die drawings and sections.
   (Submitted under NOA No. 08-1212.01)
2. Drawing No. **97-38**, titled "Series 4500 Alum. Flush Glazed System (N.I.)", sheets 1 through 7 of 7, dated 10/15/97, with revision E dated 02/23/12, prepared by Al-Farooq Corporation, signed and sealed by Javad Ahmad, P.E.
   (Submitted under previous NOA No. 12-0315.06)

B. TESTS

1. Test reports on: 1) Uniform Static Air Pressure Test, Loading per FBC TAS 202-94
   2) Water Resistance Test, per FBC, TAS 202-94
   along with marked-up drawings and installation diagram of a series 4500 aluminum storefront system, prepared by Fenestration Testing Laboratory, Inc., Test Report No. **FTL-5705**, dated 08/07/08, signed and sealed by Carlos S. Rionda, P.E.
   (Submitted under NOA No. 08-1212.01)
2. Test reports on: 1) Uniform Static Air Pressure Test, Loading per FBC TAS 202-94
   2) Water Resistance Test, per FBC, TAS 202-94
   along with marked-up drawings and installation diagram of a series 4500 aluminum storefront system, prepared by Fenestration Testing Laboratory, Inc., Test Report No. **FTL-5751**, dated 10/17/08, signed and sealed by Carlos S. Rionda, P.E.
   (Submitted under NOA No. 08-1212.01)
3. Test reports on: 1) Air Infiltration Test, per FBC, TAS 202-94
   2) Uniform Static Air Pressure Test, Loading per FBC TAS 202-94
   3) Water Resistance Test, per FBC, TAS 202-94
   along with marked-up drawings and installation diagram of a series 4500 aluminum storefront system, prepared by Fenestration Testing Laboratory, Inc., Test Report No. **FTL-5778**, dated 11/03/08, signed and sealed by Carlos S. Rionda, P.E.
   (Submitted under NOA No. 08-1212.01)

C. CALCULATIONS

1. Anchor verification calculations and structural analysis, complying with **FBC–2010**, dated 02/22/12, prepared by Al–Farooq Corporation, signed and sealed by Javad Ahmad, P.E.
   (Submitted under previous NOA No. 12-0315.06)
2. Glazing complies with **ASTM E1300-04**

Manuel Perez, P.E.
Product Control Examiner
NOA No. 13-0708.06
Expiration Date: December 04, 2018
Approval Date: October 24, 2013

NOTICE OF ACCEPTANCE: EVIDENCE SUBMITTED

D. QUALITY ASSURANCE

1. Miami-Dade Department of Regulatory and Economic Resources (RER)

E. MATERIAL CERTIFICATIONS

1. None.

F. STATEMENTS

1. Statement letter of no financial interest, conformance and compliance with the **FBC–2010**, dated 02/23/12, signed and sealed by Javad Ahmad, P.E. ***(Submitted under previous NOA No. 12-0315.06)***

G. OTHERS

1. Notice of Acceptance No. **12–0315.06**, issued to Gopi Glass Sales & Services Corp. for their **Series 4500 Flush Glazed Aluminum Storefront System – N.I.**, approved on 06/14/12 and expiring on 12/04/13.

Manuel Perez, P.E.
Product Control Examiner
NOA No. 13-0708.06
Expiration Date: December 04, 2018
Approval Date: October 24, 2013

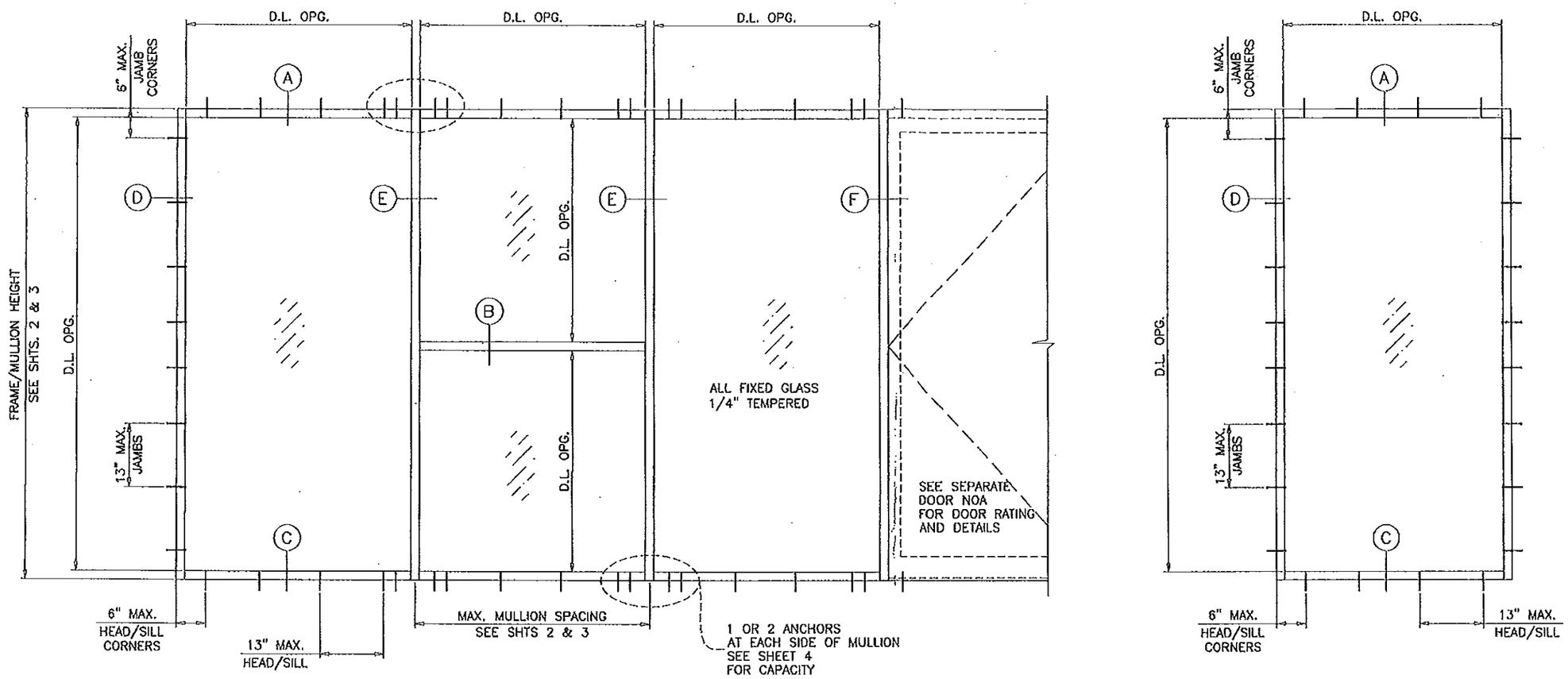

TYPICAL ELEVATION

SERIES-4500
ALUMINUM FLUSH GLAZED STOREFRONT SYSTEM

THIS SYSTEM IS NOT RATED FOR IMPACT.

THIS SYSTEM MAY BE USED IN CONJUCTION WITH MIAMI-DADE COUNTY APPROVED OUTSWING ENTRANCE DOORS.

CODE REQUIREMENTS FOR SAFEGUARDS MUST BE OBSERVED.

THIS PRODUCT HAS BEEN DESIGNED AND TESTED TO COMPLY WITH THE REQUIREMENTS OF THE FLORIDA BUILDING CODE INCLUDING HIGH VELOCITY HURRICANE ZONE (HVHZ).

WOOD BUCKS BY OTHERS, MUST BE ANCHORED PROPERLY TO TRANSFER LOADS TO THE STRUCTURE.

ANCHORS SHALL BE AS LISTED, SPACED AS SHOWN ON DETAILS, ANCHORS EMBEDMENT TO BASE MATERIAL SHALL BE BEYOND WALL DRESSING OR STUCCO.

ANCHORING OR LOADING CONDITIONS NOT SHOWN IN THESE DETAILS ARE NOT PART OF THIS APPROVAL.

A LOAD DURATION INCREASE IS USED IN DESIGN OF ANCHORS INTO WOOD ONLY.

MATERIALS INCLUDING BUT NOT LIMITED TO STEEL/METAL SCREWS, THAT COME INTO CONTACT WITH OTHER DISSIMILAR MATERIALS SHALL MEET THE REQUIREMENTS OF THE FLORIDA BLDG. CODE SECTION 2003.8.4.

INSTRUCTIONS:

USE CHARTS AS FOLLOWS.

STEP 1 DETERMINE DESIGN WIND LOAD REQUIREMENTS BASED ON WIND VELOCITY, BLDG. HEIGHT, WIND ZONE USING APPLICABLE ASCE 7 STANDARD.

STEP 2 CHECK MULLION CAPACITY FOR A GIVEN SPACING AND HEIGHT USING CHARTS ON SHEETS 2 & 3 THE CAPACITY SHOULD EXCEED THE DESIGN LOAD.

STEP 3 USING CHART ON SHEETS 4 SELECT ANCHOR OPTION WITH DESIGN RATING MORE THAN DESIGN LOAD SPECIFIED IN STEP 1 ABOVE.

STEP 4 THE LOWEST VALUE RESULTING FROM STEPS 2 AND 3 SHALL APPLY TO ENTIRE SYSTEM.

INSTALLATION OF THIS PRODUCT IN THE HVHZ AREA REQUIRES THE USE OF APPROVED SHUTTERS OR EXTERNAL PROTECTION DEVICES COMPLYING WITH HVHZ REQUIREMENTS.

INSTALLATION OF THIS SYSTEM OUTSIDE THE HVHZ AREA SHALL MEET THE APPLICABLE REQUIREMENTS FOR WIND BORNE DEBRIS PROTECTION.

PRODUCT RENEWED
as complying with the Florida Building Code
Acceptance No. 13-0709.06
Expiration Date Dec 4, 2018
By Manuel Perez
Miami Dade Product Control

Engr: JAVAD, AHMAD
CIVIL
FLA. PE # 70592
C.A.N. 3538

PRODUCT REVISED
as complying with the Florida Building Code
Acceptance No. 12-0315.06
Expiration Date 12/04/2013
By
Miami Dade Product Control

MAR 15 2012

AL-FAROOQ CORPORATION
ENGINEERS & PRODUCT DEVELOPMENT
1235 S.W. 87 AVE
MIAMI, FLORIDA 33174
TEL. (305) 264-3100 FAX. (305) 262-6978
STORE\97-38GGC

SERIES 4500 ALUM FLUSH GLAZED SYSTEM (N.I.)

GOPI GLASS CORPORATION
7450 N.W. 41 STREET
MIAMI, FL. 33166
TEL. (305) 592-2009 FAX. (305) 477-0992

revisions:

no	date	by	description
B	12.04.97	H	SILICONE SEAL ADDED
C	11.20.01	H	GENERAL REVISION
D	12.10.08		UPDATED FOR 2007 FBC
E	02.23.12		UPDATED TO 2010 FBC

date: 10-15-97
scale: 1/2"=1'-0"
dr. by: HAMID
chk. by:

drawing no. 97-38

sheet 1 of 7

MULLION LOAD CAPACITY – PSF WITHOUT INTERMEDIATE HORIZONTALS			
NOMINAL DIMS.		MULLION W/O REINF.	MULLION WITH REINF.
WIDTH (W)	FRAME HEIGHT	EXT. (+) INT. (–)	EXT. (+) INT. (–)
24"	72"	110.0	110.0
30"		110.0	110.0
36"		110.0	110.0
42"		110.0	110.0
48"		103.6	110.0
54"		96.6	110.0
60"		92.0	110.0
66"		89.3	110.0
72"		88.4	110.0
75"		88.4	110.0
24"	78"	110.0	110.0
30"		110.0	110.0
36"		106.7	110.0
42"		94.0	110.0
48"		85.1	110.0
54"		78.7	103.2
60"		74.2	97.3
66"		71.2	93.3
72"		69.4	91.0
75"		69.0	90.4
24"	84"	110.0	110.0
30"		106.1	110.0
36"		90.1	110.0
42"		79.1	104.8
48"		71.2	94.3
54"		65.4	86.7
60"		61.2	81.1
66"		58.2	77.1
72"		56.1	74.4
75"		55.4	73.5
24"	90"	110.0	110.0
30"		91.0	110.0
36"		77.1	103.2
42"		67.4	90.2
48"		60.4	80.9
54"		55.3	74.0
60"		51.4	68.8
66"		48.5	64.9
72"		46.4	62.2
75"		45.7	61.1
24"	96"	96.0	110.0
30"		77.9	106.6
36"		66.1	90.1
42"		57.9	78.6
48"		51.9	70.2
54"		47.3	63.9
60"		43.8	59.2
66"		41.1	55.6
72"		39.1	52.9
75"		38.3	51.8

MULLION LOAD CAPACITY – PSF WITHOUT INTERMEDIATE HORIZONTALS			
NOMINAL DIMS.		MULLION W/O REINF.	MULLION WITH REINF.
WIDTH (W)	FRAME HEIGHT	EXT. (+) INT. (–)	EXT. (+) INT. (–)
24"	102"	–	110.0
30"		–	94.1
36"		–	79.4
42"		–	69.1
48"		–	61.6
54"		–	55.9
60"		–	51.5
66"		–	48.2
72"		–	45.6
75"		–	44.5
24"	108"	–	103.6
30"		–	83.6
36"		–	70.5
42"		–	61.2
48"		–	54.4
54"		–	49.3
60"		–	45.3
66"		–	42.2
72"		–	39.8
75"		–	38.8
24"	114"	–	92.9
30"		–	74.9
36"		–	63.0
42"		–	54.7
48"		–	48.5
54"		–	43.8
60"		–	40.2
66"		–	37.4
72"		–	35.1
75"		–	34.1
24"	120"	–	83.7
30"		–	67.4
36"		–	56.7
42"		–	49.1
48"		–	43.5
54"		–	39.3
60"		–	35.9
66"		–	33.3
72"		–	31.2

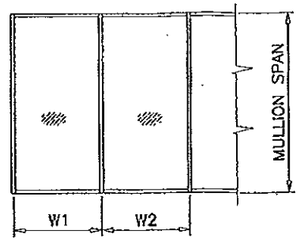

$$\text{WIDTH (W)} = \frac{W1 + W2}{2}$$

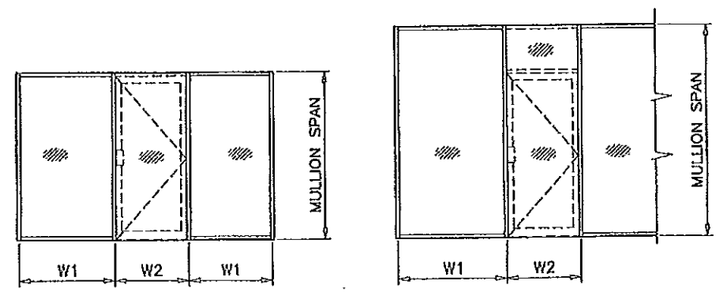

$$\text{WIDTH (W)} = \frac{W1 + W2}{2}$$

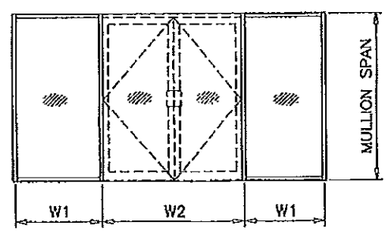

$$\text{WIDTH (W)} = \frac{W1}{2} + \frac{W2}{4}$$

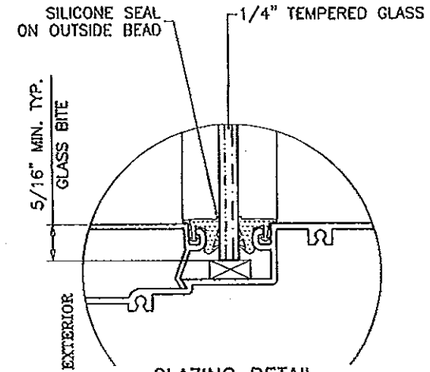

GLAZING DETAIL

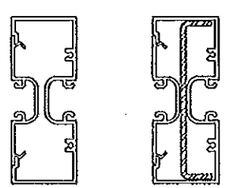

MULLION W/O REINF. MULLION WITH REINF.

NOTE:
GLASS CAPACITIES ARE BASED ON ASTM E1300-04 (3 SEC. GUSTS)

LOADS SHOWN IN CHARTS ARE FOR INSTALLATIONS WHERE WATER INFILTRATION RESISTANCE IS NOT REQUIRED. LIMIT EXTERIOR LOADS TO +72.0 PSF FOR INSTALLATIONS WHERE WATER INFILTRATION RESISTANCE IS REQUIRED.

PRODUCT RENEWED
as complying with the Florida Building Code
Acceptance No. 13-0708.06
Expiration Date Dec 4 2018
By Miami Dade Product Control

Engr: JAVAD AHMAD
CIVIL
FLA. PE # 70592
C.A.N. 3538

PRODUCT REVISED
as complying with the Florida Building Code
Acceptance No. 12-0315.06
Expiration Date 12/04/2013
By Miami Dade Product Control

MAR 15 2012

AL-FAROOQ CORPORATION
ENGINEERS & PRODUCT DEVELOPMENT
1235 S.W. 87 AVE
MIAMI, FLORIDA 33174
TEL. (305) 264-8100 FAX. (305) 262-6978

STORE\97-38GGC

SERIES 4500 ALUM FLUSH GLAZED SYSTEM (N.I.)

GOPI GLASS CORPORATION
7450 N.W. 41 STREET
MIAMI, FL. 33166
TEL. (305) 592-2009 FAX. (305) 477-0992

revisions:

no	date	by	description
D	12.10.08		UPDATED FOR 2007 FBC
E	02.23.12		UPDATED TO 2010 FBC

date: 10-15-97
scale: -
dr. by: HAMID
chk. by:

drawing no. 97-38

sheet 2 of 7

MULLION LOAD CAPACITY – PSF WITH INTERMEDIATE HORIZONTALS			
NOMINAL DIMS.		MULLION W/O REINF.	MULLION WITH REINF.
WIDTH (W)	FRAME HEIGHT	EXT. (+) INT. (–)	EXT. (+) INT. (–)
24"	72"	110.0	110.0
30"		110.0	110.0
36"		110.0	110.0
42"		101.0	110.0
48"		88.4	110.0
54"		78.6	101.9
60"		70.7	91.7
66"		64.3	83.4
72"		58.9	76.4
75"		56.6	73.4
24"	78"	110.0	110.0
30"		110.0	110.0
36"		99.3	110.0
42"		85.1	110.0
48"		74.5	97.7
54"		66.2	86.8
60"		59.6	78.1
66"		54.2	71.0
72"		49.7	65.1
75"		47.7	62.5
24"	84"	110.0	110.0
30"		101.7	110.0
36"		84.8	110.0
42"		72.7	96.3
48"		63.6	84.2
54"		56.5	74.9
60"		50.9	67.4
66"		46.2	61.3
72"		42.4	56.2
75"		40.7	53.9
24"	90"	110.0	110.0
30"		88.6	110.0
36"		73.8	97.8
42"		63.3	83.9
48"		55.4	73.4
54"		49.2	65.2
60"		44.3	58.7
66"		40.3	53.4
72"		36.9	48.9
75"		35.4	47.0
24"	96"	93.8	110.0
30"		75.1	103.2
36"		62.6	86.0
42"		53.6	73.7
48"		46.9	64.5
54"		41.7	57.3
60"		37.5	51.6
66"		34.1	46.9
72"		31.3	43.0
75"		30.0	41.3

MULLION LOAD CAPACITY – PSF WITH INTERMEDIATE HORIZONTALS			
NOMINAL DIMS.		MULLION W/O REINF.	MULLION WITH REINF.
WIDTH (W)	FRAME HEIGHT	EXT. (+) INT. (–)	EXT. (+) INT. (–)
24"	102"	–	110.0
30"		–	91.4
36"		–	76.2
42"		–	65.3
48"		–	57.1
54"		–	50.8
60"		–	45.7
66"		–	41.5
72"		–	38.1
75"		–	36.6
24"	108"	–	101.9
30"		–	81.5
36"		–	67.9
42"		–	58.2
48"		–	51.0
54"		–	45.3
60"		–	40.8
66"		–	37.1
72"		–	34.0
75"		–	32.6
24"	114"	–	91.5
30"		–	73.2
36"		–	61.0
42"		–	52.3
48"		–	45.7
54"		–	40.6
60"		–	36.6
66"		–	33.3
72"		–	30.5
75"		–	29.3
24"	120"	–	82.5
30"		–	66.0
36"		–	55.0
42"		–	47.2
48"		–	41.3
54"		–	36.7
60"		–	33.0
66"		–	30.0
72"		–	27.5

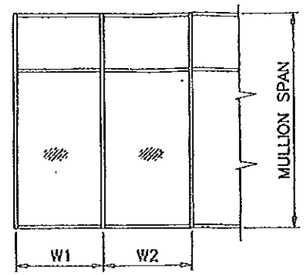

$$\text{WIDTH (W)} = \frac{W1 + W2}{2}$$

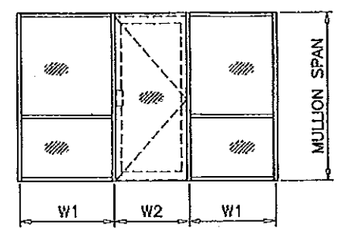

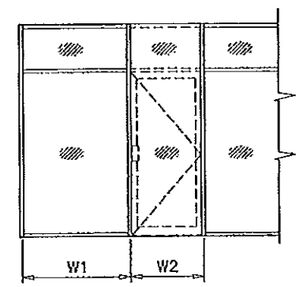

$$\text{WIDTH (W)} = \frac{W1 + W2}{2}$$

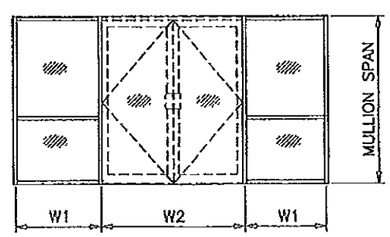

$$\text{WIDTH (W)} = \frac{W1}{2} + \frac{W2}{4}$$

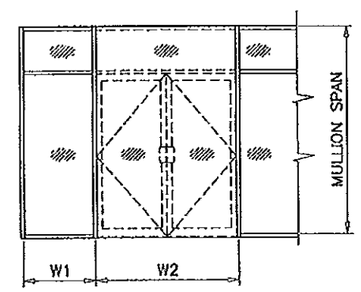

$$\text{WIDTH (W)} = \frac{W1 + W2}{2}$$

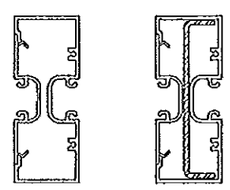

LOADS SHOWN IN CHARTS ARE FOR INSTALLATIONS WHERE WATER INFILTRATION RESISTANCE IS NOT REQUIRED. LIMIT EXTERIOR LOADS TO +72.0 PSF FOR INSTALLATIONS WHERE WATER INFILTRATION RESISTANCE IS REQUIRED.

NOTE:
GLASS CAPACITIES ARE BASED ON ASTM E1300–04 (3 SEC. GUSTS)

Engr: JAVAD AHMAD
CIVIL
FLA. PE # 70592
C.A.N. 3538

MAR 15 2012

PRODUCT RENEWED
as complying with the Florida Building Code
Acceptance No. 13-0708.06
Expiration Date Dec. 4, 2018
By
Miami Dade Product Control

PRODUCT REVISED
as complying with the Florida Building Code
Acceptance No. 12-0315.06
Expiration Date 12/04/2015
By
Miami Dade Product Control

AL-FAROOQ CORPORATION
ENGINEERS & PRODUCT DEVELOPMENT
1235 S.W. 87 AVE
MIAMI, FLORIDA 33174
TEL. (305) 264-8100 FAX. (305) 262-6978

STORE\97-38GGC

SERIES 4500 ALUM FLUSH GLAZED SYSTEM (N.I.)

GOPI GLASS CORPORATION
7450 N.W. 41 STREET
MIAMI, FL. 33166
TEL (305) 592-2009 FAX. (305) 477-0992

revisions:			
no	date	by	description
D	12.10.08		UPDATED FOR 2007 FBC
E	02.23.12		UPDATED TO 2010 FBC

date: 10-15-97
scale: -
dr. by: HAMID
chk. by:

drawing no. 97-38

ANCHOR LOAD CAPACITY – PSF
WITH OR WITHOUT INTERMEDIATE HORIZONTALS
EXT.(+) & INT.(–)

NOMINAL DIMS.		ANCHORS TYPE 'A'		ANCHORS TYPES 'B' & 'C'	
WIDTH (W)	FRAME HEIGHT	A1	A2	B1/C1	B2/C2
24"	72"	91.2	110.0	110.0	110.0
30"		76.8	110.0	110.0	110.0
36"		67.6	110.0	110.0	110.0
42"		61.3	110.0	103.0	110.0
48"		57.0	110.0	95.8	110.0
54"		54.0	108.1	90.8	110.0
60"		52.1	104.2	87.5	110.0
66"		51.0	102.0	85.7	110.0
72"		50.7	101.3	85.1	110.0
75"		50.7	101.3	85.1	110.0
24"	78"	82.9	110.0	110.0	110.0
30"		69.5	110.0	110.0	110.0
36"		60.8	110.0	102.1	110.0
42"		54.9	109.7	92.2	110.0
48"		50.7	101.3	85.1	110.0
54"		47.7	95.4	80.1	108.8
60"		45.6	91.2	76.6	104.0
66"		44.2	88.4	74.3	100.8
72"		43.4	86.9	73.0	99.0
75"		43.2	86.5	72.6	98.6
24"	84"	76.0	110.0	110.0	110.0
30"		63.4	110.0	106.6	110.0
36"		55.3	110.0	92.8	110.0
42"		49.6	99.3	83.4	110.0
48"		45.6	91.2	76.6	104.0
54"		42.7	85.3	71.7	97.3
60"		40.5	81.1	68.1	92.4
66"		39.0	78.0	65.5	89.0
72"		38.0	76.0	63.8	86.7
75"		37.7	75.3	63.3	85.9
24"	90"	70.2	110.0	110.0	110.0
30"		58.4	110.0	98.0	110.0
36"		50.7	101.3	85.1	110.0
42"		45.3	90.6	76.1	103.4
48"		41.5	82.9	69.6	94.5
54"		38.6	77.2	64.8	88.0
60"		36.5	73.0	61.3	83.2
66"		34.9	69.8	58.6	79.6
72"		33.8	67.6	56.7	77.0
75"		33.4	66.7	56.0	76.1
24"	96"	65.1	110.0	109.4	110.0
30"		54.0	108.1	90.8	110.0
36"		46.8	93.5	78.6	106.7
42"		41.7	83.4	70.0	95.1
48"		38.0	76.0	63.8	86.7
54"		35.2	70.5	59.2	80.4
60"		33.2	66.3	55.7	75.6
66"		31.6	63.2	53.1	72.0
72"		30.4	60.8	51.1	69.3
75"		29.9	59.9	50.3	68.3

ANCHOR LOAD CAPACITY – PSF
WITH OR WITHOUT INTERMEDIATE HORIZONTALS
EXT.(+) & INT.(–)

NOMINAL DIMS.		ANCHORS TYPE 'A'		ANCHORS TYPES 'B' & 'C'	
WIDTH (W)	FRAME HEIGHT	A1	A2	B1/C1	B2/C2
24"	102"	60.8	110.0	102.1	110.0
30"		50.3	100.6	84.5	110.0
36"		43.4	86.9	73.0	99.0
42"		38.6	77.2	64.8	88.0
48"		35.1	70.2	58.9	80.0
54"		32.4	64.9	54.5	74.0
60"		30.4	60.8	51.1	69.3
66"		28.8	57.7	48.4	65.8
72"		27.6	55.3	46.4	63.0
75"		27.1	54.3	45.6	61.9
24"	108"	57.0	110.0	95.8	110.0
30"		47.1	94.1	79.1	107.4
36"		40.5	81.1	68.1	92.4
42"		35.9	71.9	60.4	82.0
48"		32.6	65.1	54.7	74.3
54"		30.0	60.0	50.4	68.5
60"		28.1	56.1	47.1	64.0
66"		26.5	53.1	44.6	60.5
72"		25.3	50.7	42.6	57.8
75"		24.8	49.7	41.7	56.6
24"	114"	53.6	107.3	90.1	110.0
30"		44.2	88.4	74.3	100.8
36"		38.0	76.0	63.8	86.7
42"		33.6	67.2	56.5	76.7
48"		30.4	60.8	51.1	69.3
54"		28.0	55.9	47.0	63.8
60"		26.1	52.1	43.8	59.4
66"		24.6	49.1	41.3	56.0
72"		23.4	46.8	39.3	53.3
75"		22.9	45.8	38.5	52.2
24"	120"	50.7	101.3	85.1	110.0
30"		41.7	83.4	70.0	95.1
36"		35.8	71.5	60.1	81.6
42"		31.6	63.2	53.1	72.0
48"		28.5	57.0	47.9	65.0
54"		26.2	52.3	43.9	59.6
60"		24.3	48.6	40.9	55.5
66"		22.9	45.7	38.4	52.2
72"		21.7	43.4	36.5	49.5

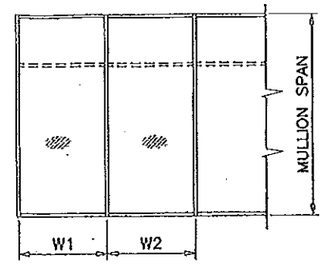

$$\text{WIDTH (W)} = \frac{W1 + W2}{2}$$

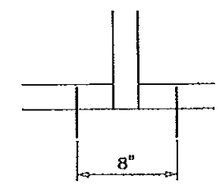

A1, B1, C1

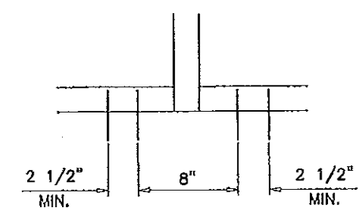

A2, B2, C2

ANCHORS TYPES: SEE SHEET 5 FOR DESCRIPTION

A1 = (1) ANCHORS TYPE 'A' AT EACH SIDE OF MULLION
A2 = (2) ANCHORS TYPE 'A' AT EACH SIDE OF MULLION

B1 = (1) ANCHORS TYPE 'B' AT EACH SIDE OF MULLION
B2 = (2) ANCHORS TYPE 'B' AT EACH SIDE OF MULLION

C1 = (1) ANCHORS TYPE 'C' AT EACH SIDE OF MULLION
C2 = (2) ANCHORS TYPE 'C' AT EACH SIDE OF MULLION

ALL OTHER ANCHORS TO BE SPACED AS PER ELEVATION.

PRODUCT RENEWED
as complying with the Florida
Building Code
Acceptance No. 13-0708.06
Expiration Date Dec. 4, 2018
By Manuel Perez
Miami Dade Product Control

Engr: JAVAD AHMAD
CIVIL
FLA. PE #. 70592
C.A.N. 3538

MAR 15 2012

PRODUCT REVISED
as complying with the Florida
Building Code
Acceptance No. 12-0315.06
Expiration Date 12/04/2013
By
Miami Dade Product Control

AL-FAROOQ CORPORATION
ENGINEERS & PRODUCT DEVELOPMENT
1235 S.W. 87 AVE
MIAMI, FLORIDA 33174
TEL. (305) 264-8100 FAX. (305) 262-6975
STORE\97-38GGC

SERIES 4500 ALUM FLUSH GLAZED SYSTEM (N.L.)

GOPI GLASS CORPORATION
7450 N.W. 41 STREET
MIAMI, FL. 33166
TEL. (305) 592-2009 FAX. (305) 477-0992

revisions:

no.	date	by	description
D	12.10.08		UPDATED FOR 2007 FBC
E	02.23.12		NO CHANGE THIS SHEET

date: 10-15-97
scale: -
dr. by: HAMID
chk. by:

drawing no. 97-38

sheet 4 of 7

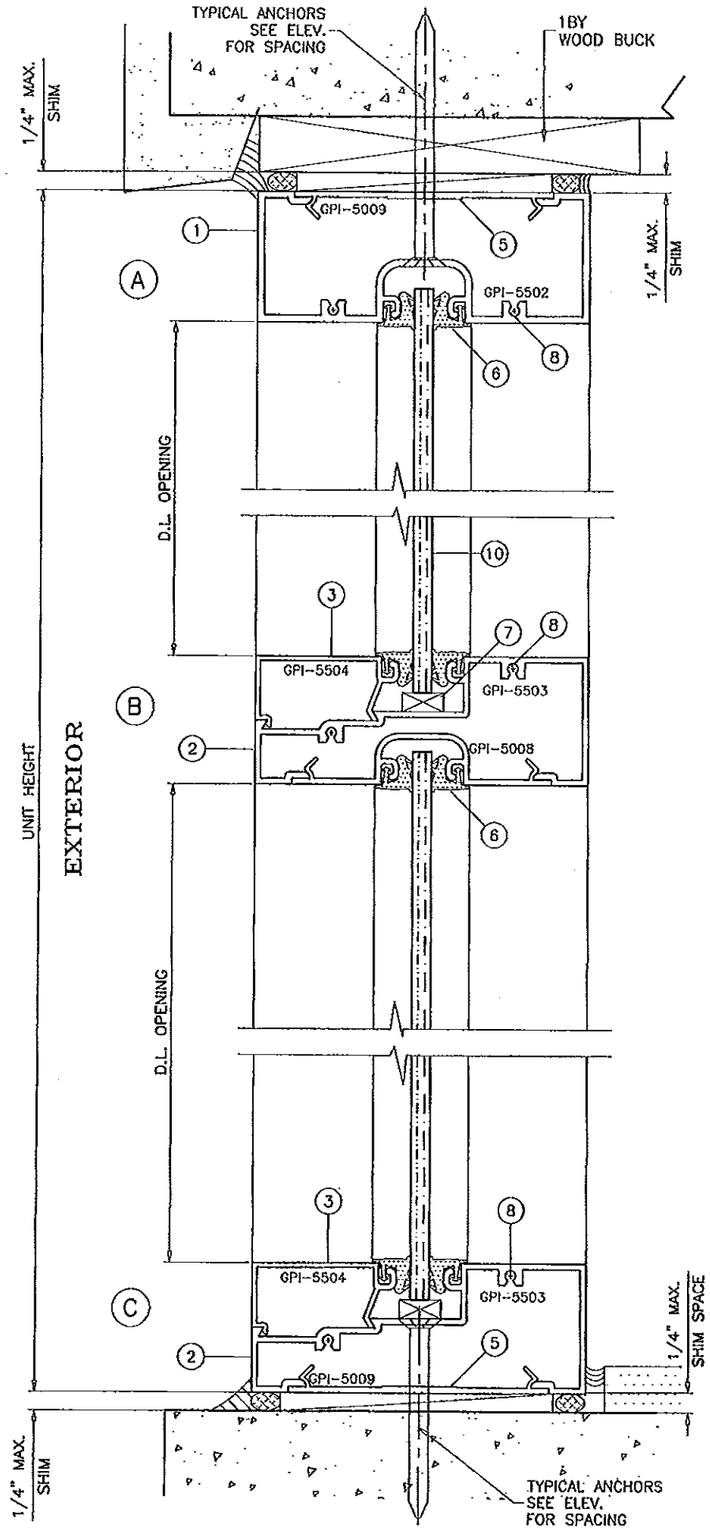

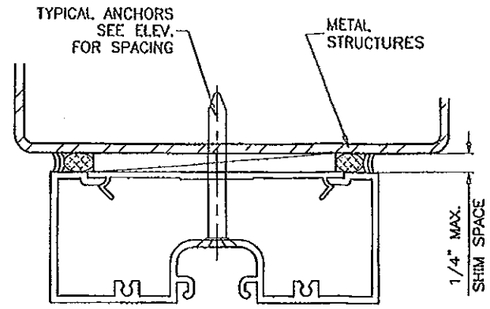

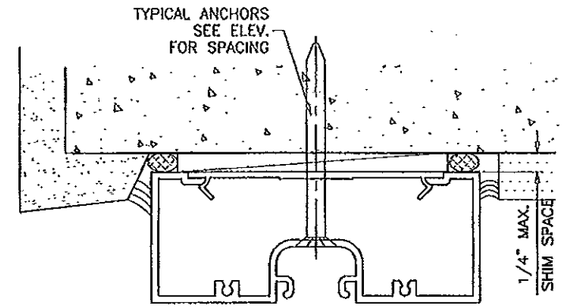

TYPICAL ANCHORS: SEE ELEV. FOR SPACING

TYPE 'A'– 1/4" DIA. ULTRACON BY 'ELCO' (Fu=177 KSI, Fy=155 KSI)
INTO 2BY WOOD BUCKS OR WOOD STRUCTURES
1–1/2" MIN. PENETRATION INTO WOOD

THRU 1BY BUCKS INTO CONC. OR MASONRY
1–1/4" MIN. EMBED INTO CONC. OR MASONRY

TYPE 'B'– 1/4" DIA. ULTRACON BY 'ELCO' (Fu=177 KSI, Fy=155 KSI)
DIRECTLY INTO CONC. OR MASONRY
1–1/2" MIN. EMBED INTO CONCRETE
1–1/4" MIN. EMBED INTO MASONRY

TYPE 'C'– #14 SMS OR SELF DRILLING SCREWS (GRADE 2 CRS)
INTO METAL STRUCTURES
STEEL : 12 GA. MIN. (Fy = 36 KSI MIN.)
ALUMINUM : 1/8" THK. MIN. (6063–T5 MIN.)
(STEEL IN CONTACT WITH ALUMINUM TO BE PLATED OR PAINTED)

TYPICAL EDGE DISTANCE
INTO CONCRETE AND MASONRY = 2–1/2" MIN.
INTO WOOD STRUCTURE = 1" MIN.
INTO METAL STRUCTURE = 3/4" MIN.

CONCRETE AT HEAD, SILL OR JAMBS f'c = 3000 PSI MIN.
C–90 HOLLOW/FILLED BLOCK AT JAMBS f'm = 2000 PSI MIN.

SEALANTS:

GLAZING BEAD TO FRAME, MULLION AND FRAME SEAMS AND ALL FRAME CORNERS SEALED WITH CLEAR/ALUM COLORED SILICONE 'SCHNEE MOREHEAD 5504'.

PRODUCT RENEWED
as complying with the Florida Building Code
Acceptance No 13-0709.06
Expiration Date Dec 7 2018
By
Miami-Dade Product Control

WOOD BUCKS AND METAL STRUCTURES NOT BY GOPI GLASS MUST SUPPORT LOADS IMPOSED BY GLAZING SYSTEM AND TRANSFER THEM TO THE BUILDING STRUCTURE.

Engr: JAVAD AHMAD
CIVIL
FLA. PE # 70592
C.A.N. 3538

MAR 15 2012

PRODUCT REVISED
as complying with the Florida Building Code
Acceptance No 12-0315.06
Expiration Date 12/04/2013
By
Miami-Dade Product Control

AL-FAROOQ CORPORATION
ENGINEERS & PRODUCT DEVELOPMENT
1235 S.W. 87 AVE
MIAMI, FLORIDA 33174
TEL. (305) 264-8100 FAX. (305) 262-6978

STORE\97-38GGC

SERIES 4500 ALUM. FLUSH GLAZED SYSTEM (N.I.)

GOPI GLASS CORPORATION
7450 N.W. 41 STREET
MIAMI, FL. 33166
TEL. (305) 592-2009 FAX. (305) 477-0992

revisions:			
no	date	by	description
D	12.10.08		UPDATED FOR 2007 FBC
E	02.23.12		ANCHORS REV.

date: 10-15-97
scale: 1/2" = 1"
dr. by: HAMID
chk. by:

drawing no. 97-38

sheet 5 of 7

ITEM #	PART #	QUANTITY	DESCRIPTION	MATERIAL	MANF./SUPPLIER/REMARKS
1	GPI-5502	AS REQD.	OPEN BACK HEAD/JAMB/MULL	6063-T6	-
2	GPI-5503	AS REQD.	FRAME SILL	6063-T6	-
3	GPI-5504	AS REQD.	GLASS STOP	6063-T5	-
4	GPI-5008	AS REQD.	POCKET FILLER	6063-T6	-
5	GPI-5009	AS REQD.	FLAT FILLER	6063-T6	-
6	-	AS REQD.	GLAZING GASKET	NEOPRENE	-
7		2/ LITE	SETTING BLOCK	EPDM	DUROMETER 87±5 SHORE A
8	#10 X 1" SMS	2/ CORNER	FRAME ASSEMBLY SCREWS	-	-
9	-	AS REQD.	REINFORCING CHANNEL	STEEL	5/8" X 4-1/4" X 5/8" X 1/8" TH.
10	-	-	1/4" TEMPERED GLASS	-	-

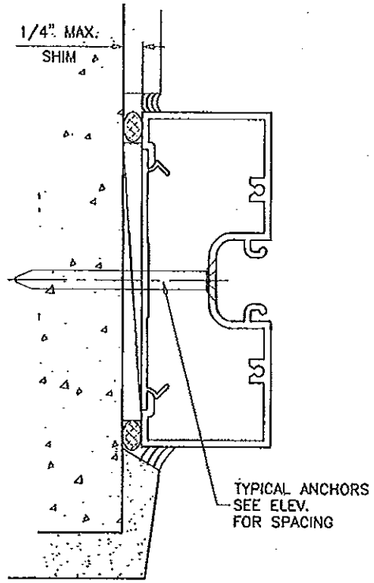

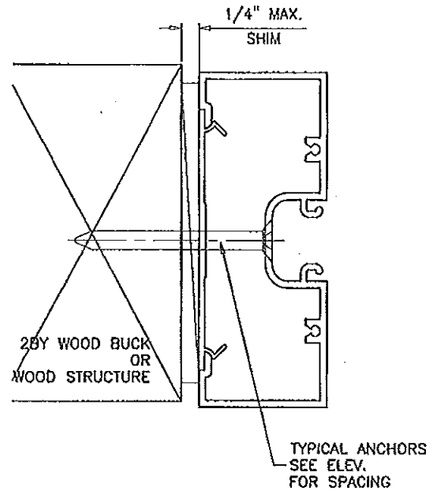

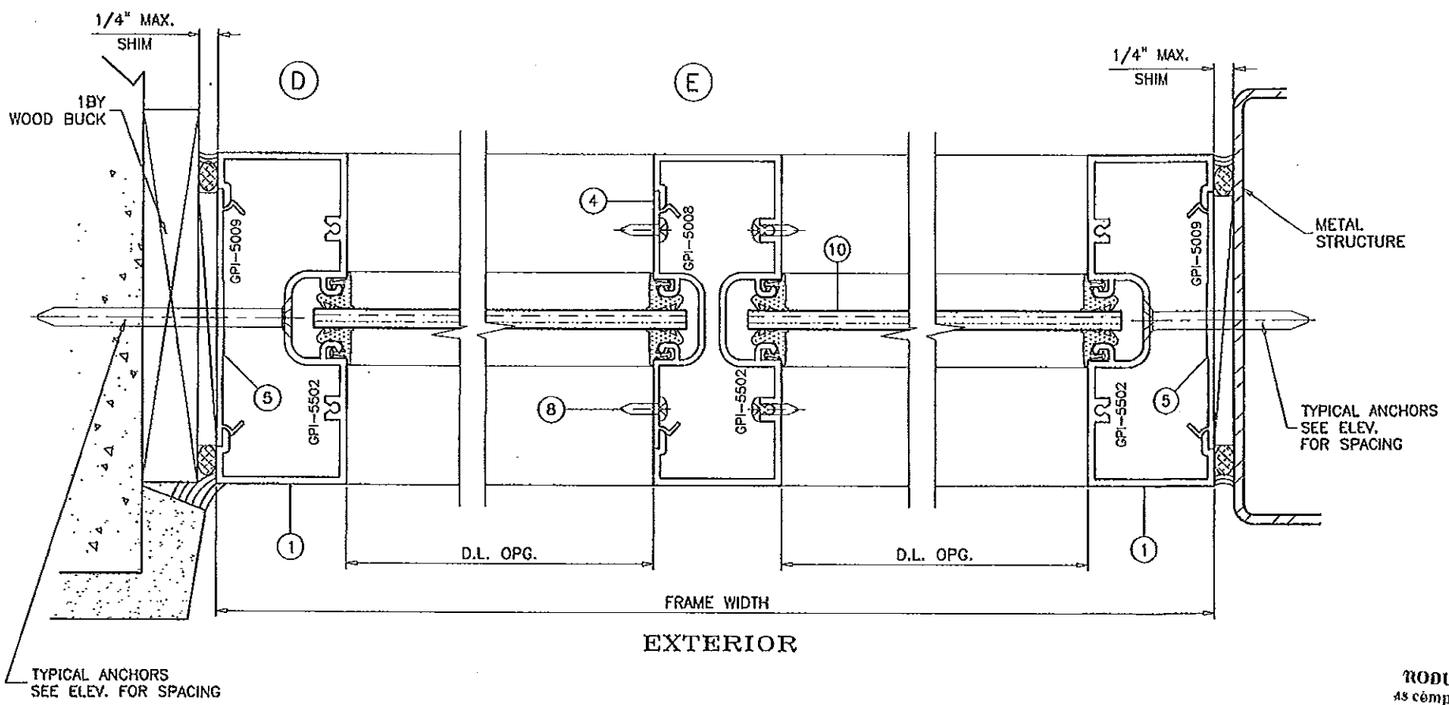

EXTERIOR

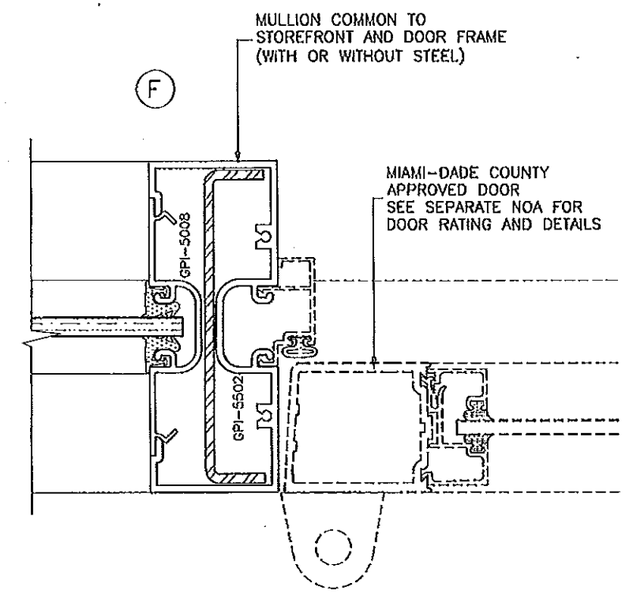

PRODUCT RENEWED
as complying with the Florida
Building Code
Acceptance No 13-0708.06
Expiration Date Dec 4 2018
By Manuel Perez
Miami Dade Product Control

Engr: JAVAD AHMAD
CIVIL
FLA. PE # 70592
C.A.N. 3538

MAR 15 2012

PRODUCT REVISED
as complying with the Florida
Building Code
Acceptance No 12-0315.06
Expiration Date 12/04/2013
By
Miami Dade Product Control

AL-FAROOQ CORPORATION
ENGINEERS & PRODUCT DEVELOPMENT
1235 S.W. 87 AVE
MIAMI, FLORIDA 33174
TEL (305) 264-8100 FAX. (305) 262-6978
STORE\97-386GC

SERIES 4500 ALUM FLUSH GLAZED SYSTEM (N.L.)

GOPI GLASS CORPORATION
7450 N.W. 41 STREET
MIAMI, FL. 33166
TEL. (305) 592-2009 FAX. (305) 477-0992

revisions:

no	date	by	description
D	12.10.08		UPDATED FOR 2007 FBC
E	02.23.12		UPDATED TO 2010 FBC

date: 10-15-97
scale: 1/2" = 1"
dr. by: HAMID
chk. by:

drawing no.
97-38

sheet 6 of 7

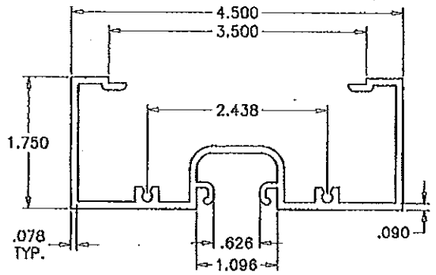

GPI-5502
6063-T6

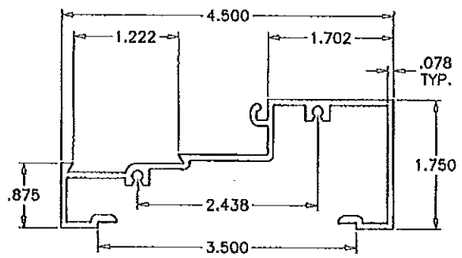

GPI-5503
6063-T6

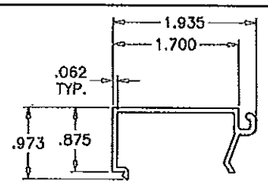

GPI-5504
6063-T5

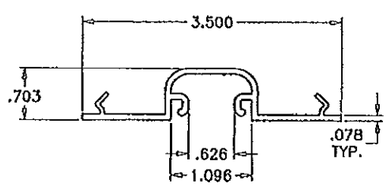

GPI-5008
6063-T6

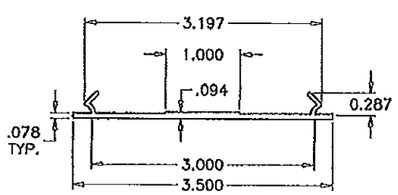

GPI-5009
6063-T6

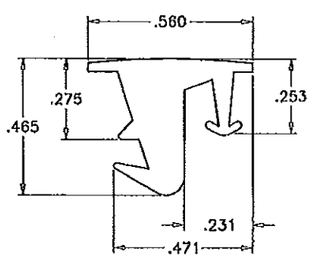

HARDNESS = 71±5 SHORE A
TENSILE STRENGTH = 1429 PSI
ELONGATION AT BREAK = 295%
TEAR STRENGTH = 221 PPI
SPECIFIC GRAVITY = 1.21

GLAZING GASKET
SCALE=2:1

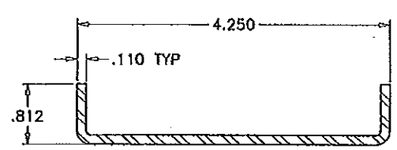

STEEL CHANNEL REINFORCEMENT

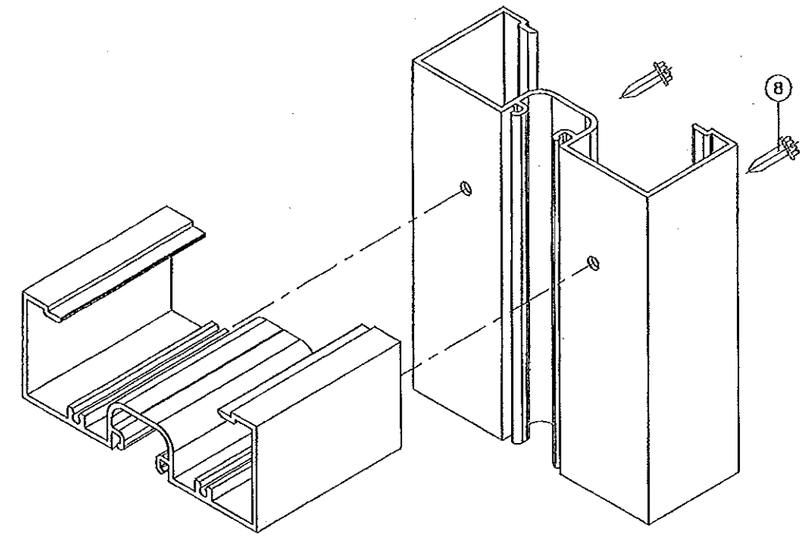

FRAME CORNERS

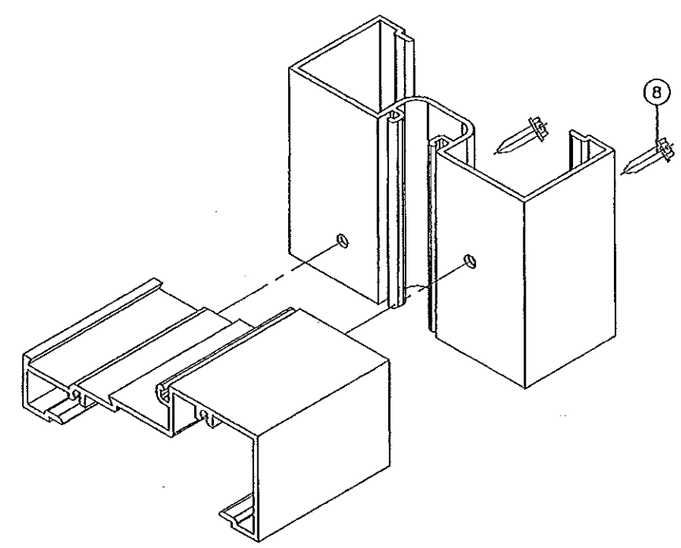

PRODUCT RENEWED
as complying with the Florida
Building Code
Acceptance No. 13-0708.06
Expiration Date Dec 4 2018
By
Miami-Dade Product Control

Engr: JAVAD AHMAD
CIVIL
FLA. PE # 70592
C.A.N. 3538

MAR 15 2012

PRODUCT REVISED
as complying with the Florida
Building Code
Acceptance No. 12-0315.06
Expiration Date 12/04/2015
By
Miami-Dade Product Control

AL-FAROOQ CORPORATION
ENGINEERS & PRODUCT DEVELOPMENT
1235 S.W. 87 AVE
MIAMI, FLORIDA 33174
TEL. (305) 264-8100 FAX. (305) 262-6978
STORE\97-38GGC

SERIES 4500 ALUM FLUSH GLAZED SYSTEM (N.I.)

GOPI GLASS CORPORATION
7450 N.W. 41 STREET
MIAMI, FL. 33166
TEL. (305) 592-2009 FAX. (305) 477-0992

revisions:

no	date	by	description
D	12.10.08		UPDATED FOR 2007 FBC
E	02.23.12		UPDATED TO 2010 FBC

date: 10-15-97
scale: 1/2" = 1"
dr. by: HAMID
chk. by:

drawing no.
97-38

sheet 7 of 7