MIAMI-DADE COUNTY
PRODUCT CONTROL SECTION
11805 SW 26 Street, Room 208
Miami, Florida 33175-2474
T (786) 315-2590 F (786) 315-2599
www.miamidade.gov/economy

DEPARTMENT OF REGULATORY AND ECONOMIC RESOURCES (RER)
BOARD AND CODE ADMINISTRATION DIVISION

NOTICE OF ACCEPTANCE (NOA)

Peetz Windows and Doors, Inc.
15951 S.W. 41 Street, Suite 150
Weston, FL 33331

SCOPE:

This NOA is being issued under the applicable rules and regulations governing the use of construction materials. The documentation submitted has been reviewed and accepted by Miami-Dade County PERA - Product Control Section to be used in Miami Dade County and other areas where allowed by the Authority Having Jurisdiction (AHJ).

This NOA shall not be valid after the expiration date stated below. The Miami-Dade County Product Control Section (In Miami Dade County) and/or the AHJ (in areas other than Miami Dade County) reserve the right to have this product or material tested for quality assurance purposes. If this product or material fails to perform in the accepted manner, the manufacturer will incur the expense of such testing and the AHJ may immediately revoke, modify, or suspend the use of such product or material within their jurisdiction. PERA reserves the right to revoke this acceptance, if it is determined by Miami-Dade County Product Control Section that this product or material fails to meet the requirements of the applicable building code.

This product is approved as described herein, and has been designed to comply with the Florida Building Code, including the High Velocity Hurricane Zone.

DESCRIPTION: Series "Lift & Slide Bronze Clad" Wood Sliding Glass Doors – L.M.I.

APPROVAL DOCUMENT: Drawing No. **1632 Rev B**, titled "Lift & Slide Bronze Clad Sliding Glass Impact Doors", sheets 1 through 38 of 38, dated 10/19/11 and last revised on NOV 06, 2013, prepared by W. W. Schafer Engineering & Consulting, P. A., signed and sealed by Warren W. Schafer, P. E., bearing the Miami-Dade County Product Control Revision stamp with the Notice of Acceptance number and Expiration date by the Miami-Dade County Product Control Section.

MISSILE IMPACT RATING: Large and Small Missile Impact Resistant

Limitations:

1. See sheet 1 for locking points quantity requirements for hardware item **#78** (FFI #255JH or GU-934 mechanism), any of the locking bolt item **#83** (GU or FFI #LAR 25000012 secured w/ 3/16"X 3-1/8 screws or Hautau part # 184695) may be used. See the locking bolt item **#83** (Hautau part # **184695**) quantity requirements for Hardware item **#79** (Hautau HS-300 or 300-E mechanism).
2. Electrical device is not part of this approval and must be reviewed by corresponding Building Authority. Any cavities for electrical device must fit in within tested cavities per test.
3. See Sheet 12 for **90^0** corner SGD. This condition is approved with Flush mount Sill only (see details sheets 28 thru 32). Flush Sill mount requires two (2) locking item #130 per operable panel. Also anchor clip mounting condition is not applicable with Flush Mount sill.
4. See glazing details in sheet 24. The max frame height with glass option 3 & 5 are 134-1/16" and the Frame height with glass option 1, 2 & 4 are limited to 98-1/16" max. The max allowable sash (panel) width= 62-7/16" and the max panel height=129". Doors must comply with min height and width per FBC requirements.

LABELING: Each unit shall bear a permanent label with the manufacturer's name or logo, Kall/Eifel, Germany and series and following statement: "Miami-Dade County Product Control Approved", unless otherwise noted herein.

MIAMI-DADE COUNTY APPROVED

11/22/13

MIAMI-DADE COUNTY
PRODUCT CONTROL SECTION
11805 SW 26 Street, Room 208
Miami, Florida 33175-2474
T (786) 315-2590 F (786) 315-2599
www.miamidade.gov/economy

DEPARTMENT OF REGULATORY AND ECONOMIC RESOURCES (RER)
BOARD AND CODE ADMINISTRATION DIVISION

NOTICE OF ACCEPTANCE (NOA)

Peetz Windows and Doors, Inc.
15951 S.W. 41 Street, Suite 150
Weston, FL 33331

TERMINATION of this NOA will occur after the expiration date or if there has been a revision or change in the materials, use, and/or manufacture of the product or process. Misuse of this NOA as an endorsement of any product, for sales, advertising or any other purposes shall automatically terminate this NOA. Failure to comply with any section of this NOA shall be cause for termination and removal of NOA.

ADVERTISEMENT: The NOA number preceded by the words Miami-Dade County, Florida, and followed by the expiration date may be displayed in advertising literature. If any portion of the NOA is displayed, then it shall be done in its entirety.

INSPECTION: A copy of this entire NOA shall be provided to the user by the manufacturer or its distributors and shall be available for inspection at the job site at the request of the Building Official.

This NOA **revises NOA # 11-1024.13** and consists of the pages 1 &2 and evidence pages E-1 & E-2, as well as approval document mentioned above.

The submitted documentation was reviewed by **Ishaq I. Chanda, P.E.**

MIAMI-DADE COUNTY APPROVED

11/22/13

NOTICE OF ACCEPTANCE: EVIDENCE SUBMITTED

A. DRAWINGS

1. Manufacturer's die drawings and sections (Submitted under file # **11-1024.13**)
2. Drawing No. **1632 Rev B**, titled "Lift & Slide Bronze Clad Sliding Glass Impact Doors", sheets 1 through 38 of 38, dated 10/19/11 and last revised on NOV 06, 2013, prepared by W. W. Schafer Engineering & Consulting, P. A., signed and sealed by Warren W. Schafer, P.E.

B. TESTS

1. Test reports on: 1) Air Infiltration Test, per FBC, TAS 202-94
   2) Uniform Static Air Pressure Test, Loading per FBC TAS 202-94
   3) Water Resistance Test, per FBC, TAS 202-94
   4) Large Missile Impact Test per FBC, TAS 201-94
   5) Cyclic Wind Pressure Loading per FBC, TAS 203-94
   6) Forced Entry Test, per FBC 2411 3.2.1, TAS 202-94

   Along with marked-up drawings and installation diagram of 90 degree Lift and Slide wood glass doors w/ pocket, prepared by Architectural Testing, Test Report No. **B-205.02-450-18**, dated 07/02/2013, signed and sealed by Vinu J. Abraham, P. E.
   (Note: This test report has addendum letter dated Nov 06, 2013, issued by Architectural Testing, signed and sealed by Vinu J. Abraham, P. E.
2. Additional Test reports on: 1) Air Infiltration Test, per FBC, TAS 202-94
   2) Uniform Static Air Pressure Test, Loading per FBC TAS 202-94
   3) Water Resistance Test, per FBC, TAS 202-94
   4) Large Missile Impact Test per FBC, TAS 201-94
   5) Cyclic Wind Pressure Loading per FBC, TAS 203-94
   6) Forced Entry Test, per FBC 2411 3.2.1, TAS 202-94

   Along with marked-up drawings and installation diagram of Lift and Slider with pocket, prepared by Hurricane Test Laboratory, LLC, Test Report No. **HTL–0284–1009–07**, dated 09/29/08, **HTL–0284–0526–03**, dated 03/14/2005, **HTL–0284–1018–04**, dated 03/14/2005, **HTL–0284–1205–04**, dated 03/14/2005, and **HTL–0284–1113–01**, dated 03/14/2005, all signed and sealed by Vinu J. Abraham, P. E. (Submitted under files # **11-1024.13**, **# 10-0504.02**, **#09-0423.01**, **#09-0423.02** and # **050812.06**)

C. CALCULATIONS (Submitted under file # **11-1024.13**)

1. Anchor verification calculations complying w/ FBC-2007, dated 02-22-09, prepared, signed and sealed by Warren W. Schafer, P.E. (Submitted under file # **10-0504.02**)
2. Glazing complies with ASTME-1300-02 &-04.

D. QUALITY ASSURANCE

1. Miami Dade Department of Regulatory and Economic Resources (RER)

Ishaq I. Chanda

Ishaq I. Chanda, P.E.
Product Control Examiner
NOA No. 13-0717.10
Expiration Date: November 24, 2015
Approval Date: November 28, 2013

NOTICE OF ACCEPTANCE: EVIDENCE SUBMITTED

E. MATERIAL CERTIFICATIONS

1. Notice of Acceptance No. **12-1213.02** issued to Eastman Chemical Company (MA) former Solutia, for "**Saflex CP-Saflex & Saflex Composite Glass Interlayer w/ PET**", expiring on 12/11/2018.
2. Notice of Acceptance No. **12-1213.02** issued Eastman Chemical Company (MA) former Solutia Inc. for "**Saflex Clear or colored glass interlayer**", expiring on 05/21/16.

F. STATEMENTS

1. Statement letters of conformance to FBC 2010, dated June 05, 2013, prepared by W. W. Schafer Engineering & Consulting, P. A., signed and sealed by Warren W. Schafer, P.E
2. Statement letters of conformance to FBC 2010, dated OCT 19, 2011, prepared by W. W. Schafer Engineering & Consulting, P. A., signed and sealed by Warren W. Schafer, P.E. (Submitted under file **# 11-1224.13**)
3. Statement letters of conformance to FBC 2007 and "No financial interest", both dated February 23, 2009, prepared by W. W. Schafer Engineering & Consulting, P. A., signed and sealed by Warren W. Schafer, P.E. (Submitted under file **# 10-0504.02**)
4. Statement of compliance, issued as part of the above referenced test reports.
5. Addendum letter dated Nov 06, 2013, issued by Architectural Testing, signed and sealed by Vinu J. Abraham, P. E.
6. Distributor Agreement documents in conformance to BCCO guidelines dated April 23, 2009 signed by Christian Peetz, President of Helmut Peetz, GmbH, and by Eva Leon, V. P. of Peetz Windows And Doors, Inc. (Submitted under file # **10-0504.02**)

G. OTHER

1. This NOA **revises** NOA # **11-1024.13**, expiring on 11/24/15.
2. Test Proposals dated June 06, 2013 via e-mail approved by Jaime D. Gascon, P.E. and test proposal # **06-0091**, approved by BCCO.

Ishaq I. Chanda

Ishaq I. Chanda, P.E.
Product Control Examiner
NOA No. 13-0717.10
Expiration Date: November 24, 2015
Approval Date: November 28, 2013

GENERAL NOTES:

1. THESE DOOR SYSTEMS HAVE BEEN TESTED, ANALYZED & APPROVED FOR DESIGN PRESSURES NOT TO EXCEED THOSE SHOWN IN THE "ALLOWABLE DESIGN PRESSURE" TABLE(S).
2. OPENINGS, BUCKING & BUCKING FASTENERS MUST BE PROPERLY DESIGNED & INSTALLED TO TRANSFER WIND LOADS TO THE STRUCTURE.
3. ALL HARDWARE & FASTENERS SHALL BE IN ACCORDANCE WITH THESE DRAWINGS & SHALL NOT VARY UNLESS SPECIFICALLY MENTIONED ON THE DRAWINGS. SPECIFIED ANCHOR EMBED TO BASE MATERIAL SHALL BE BEYOND WALL FINISH OR STUCCO.
4. THE DETAILS & SPECIFICATIONS SHOWN HEREIN REPRESENT THE PRODUCTS TESTED & PROPOSED FOR WATER, AIR, IMPACT, CYCLIC & UNIFORM STATIC AIR PRESSURE TESTING IN CONFORMANCE WITH THE FLORIDA BUILDING CODE PROTOCALS TAS-201, 202 & 203 FOR LARGE MISSILE IMPACT DOORS.
5. THESE DOOR SYSTEMS HAVE BEEN DESIGNED IN ACCORDANCE WITH AND MEET THE REQUIREMENTS OF THE FLORIDA BUILDING CODE (FBC) INCLUDING HIGH VELOCITY HURRICANE ZONES (HVHZ).
6. IMPACT SHUTTERS ARE NOT REQUIRED WITH THESE DOORS.
7. ALL ANCHORS SECURING DOOR FRAME TO PRESSURE TREATED BUCKS OR WOOD FRAMING SHALL BE CAPABLE OF RESISTING CORROSION CAUSED BY THE PRESSURE TREATING CHEMICALS IN THE WOOD.
8. DETERMINE THE POSITIVE & NEGATIVE DESIGN LOADS TO USE WHEN REFERENCING THESE DOCUMENTS IN ACCORDANCE WITH THE GOVERNING CODE AND GOVERNING WIND VELOCITY. FOR WIND LOAD CALCULATIONS IN ACCORDANCE WITH THE FLORIDA BUILDING CODE, A DIRECTIONALITY FACTOR OF Kd = 0.85 MAY BE APPLIED PER THE ASCE 7 STANDARD.
9. NO INCREASE IN ALLOWABLE STRESS HAS BEEN USED IN THE CERTIFICATION OF THIS PRODUCT. WIND LOAD DURATION FACTOR Cd = 1.6 WAS USED FOR WOOD SCREW ANALYSIS ONLY.
10. MATERIALS, INCLUDING BUT NOT LIMITED TO STEEL SCREWS, THAT COME INTO CONTACT WITH OTHER DISSIMILAR MATERIALS SHALL MEET THE REQUIREMENTS OF FLORIDA BUILDING CODE CHAPTER 20.
11. All WOOD MEMBERS OF DOORS THAT MAY POSSIBLY COME INTO CONTACT WITH MASONRY OR CONCRETE SUBSTRATES, ARE SUBJECT TO MOISTURE &/OR ARE SUBJECT TO THE OUTSIDE ENVIRONMENT SHALL BE OF AN APPROVED DURABLE SPECIES OR BE TREATED IN AN APPROVED METHOD WITH AN APPROVED PRESERVATIVE PER FBC SECTION 2326.
12. DOOR POCKETS SHALL BE CONSTRUCTED BY PEETZ AS DETAILED IN THESE DRAWINGS. BECAUSE THE POCKETS ARE NOT IMPACT NOR WIND PRESSURE RATED, THEY SHALL BE COVERED BY AN IMPACT RESISTANT WALL STRUCTURE DESIGNED BY OTHERS.

LOCKING BOLT QUANTITY REQUIREMENTS WITH LOCKING HARDWARE ITEM #78

(1) SASH HEIGHT	QUANTITY PER PANEL
OVER 104 1/2"	(2) 5
89" TO 104 1/2"	(3) 4
LESS THAN 89"	(4) 3

(1) SASH HEIGHT DIMENSIONS ARE APPROXIMATELY 5" LESS THAN THE FRAME HEIGHT.
(2) 5 POINT LOCKING BOLT POSITIONS CONSIST OF THE BOTTOM 4 BOLTS LOCATED 10 3/8", 47 3/8", 75 7/16" & 85 5/16" FROM BOTTOM OF SASH & THE TOP BOLT LOCATED 7 3/4" FROM TOP OF SASH.
(3) 4 POINT LOCKING BOLT POSITIONS CONSIST OF THE BOTTOM 3 BOLTS LOCATED 10 3/8", 47 3/8" & 75 7/16" FROM BOTTOM OF SASH & THE TOP BOLT LOCATED 7 3/4" FROM TOP OF SASH.
(4) 3 POINT LOCKING BOLT POSITIONS CONSIST OF THE BOTTOM 2 BOLTS LOCATED 10 3/8" & 47 3/8" FROM BOTTOM OF SASH & THE TOP BOLT LOCATED 7 3/4" FROM TOP OF SASH.

LOCKING BOLT QUANTITY REQUIREMENTS WITH LOCKING HARDWARE ITEM #79

(1) SASH HEIGHT	QUANTITY PER PANEL
OVER 90 3/8"	(2) 3
90 3/8" & LESS	(3) 2

(1) SASH HEIGHT DIMENSIONS ARE APPROXIMATELY 5" LESS THAN THE FRAME HEIGHT.
(2) 3 POINT LOCKING BOLT POSITIONS ARE 9 7/8", 47 1/4" & 86 5/8" FROM BOTTOM OF SASH.
(3) 2 POINT LOCKING BOLT POSITIONS ARE 9 7/8" & 47 1/4" FROM BOTTOM OF SASH.

INTERLOCK QUANTITY REQUIREMENTS

(1) SASH HEIGHT	QUANTITY PER PANEL
OVER 84 7/8"	4
LESS THAN 84 7/8"	3

(1) SASH HEIGHT DIMENSIONS ARE APPROXIMATELY 5" LESS THAN THE FRAME HEIGHT

(1) SILL LOCK BOLT QUANTITY REQUIREMENTS

2 PER DOOR PANEL

(1) SILL LOCK BOLT IS ONLY REQ'D WITH FLUSH MOUNT SILL

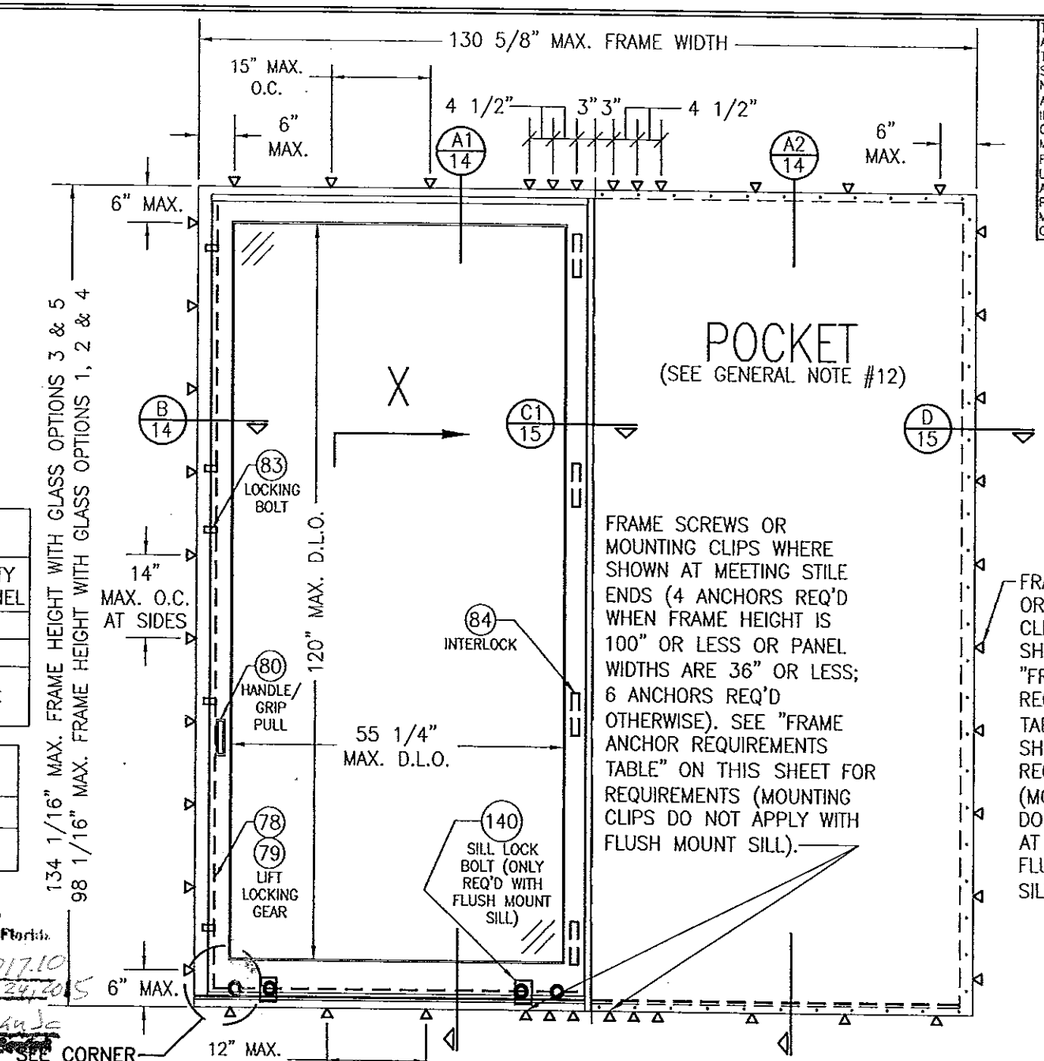

FRAME SCREWS OR MOUNTING CLIPS WHERE SHOWN AT MEETING STILE ENDS (4 ANCHORS REQ'D WHEN FRAME HEIGHT IS 100" OR LESS OR PANEL WIDTHS ARE 36" OR LESS; 6 ANCHORS REQ'D OTHERWISE). SEE "FRAME ANCHOR REQUIREMENTS TABLE" ON THIS SHEET FOR REQUIREMENTS (MOUNTING CLIPS DO NOT APPLY WITH FLUSH MOUNT SILL).

FRAME SCREWS OR MOUNTING CLIPS WHERE SHOWN. SEE "FRAME ANCHOR REQUIREMENTS TABLE" ON THIS SHEET FOR REQUIREMENTS (MOUNTING CLIPS DO NOT APPLY AT SILL WITH FLUSH MOUNT SILL).

PRODUCT REVISED
as complying with the Florida Building Code
Acceptance No. 13-0717.10
Expiration Date Nov 24, 2015
By Chas. L. Chase
Building Products Product Control

EXTERIOR ELEVATION:
1 PANEL DEEP X DOOR WITH POCKET
SCALE: 1/2" = 1'-0"

THESE DRAWINGS ARE APPLICABLE ONLY TO THE PRODUCT SPECIFIED. THEY MAY NOT BE USED FOR THE ASSEMBLY AND/OR INSTALLATION OF ANY OTHER PRODUCT NOR MAY THEY BE USED FOR RATIONAL AND/OR LOCAL APPROVAL OF ANY PRODUCT NOT PRODUCED BY THE MANUFACTURER STATED ON THESE DRAWINGS.

ALLOWABLE DESIGN PRESSURE
(ALL DOOR CONDITIONS)

+/-70 PSF

FOR SIMPLIFICATION, ONLY FRAME & SASH PROJECTION LINES ARE SHOWN FOR THESE ELEVATIONS

FRAME ANCHOR REQUIREMENTS TABLE

(1) OPENING TYPE (SUBSTRATE)	FRAME/CLIP TO OPENING FASTENER TYPE	MINIMUM EMBED	MINIMUM EDGE DIST.
FRAME SCREWS			
MIN. 2X_ WOOD FRAME OR BUCK (MIN. GR. 3 & G=0.55)	1/4" CONCRETE SCREW	1 1/4"	1 1/2"
MIN. 16 GA. 33 KSI METAL STUD	1/4" GR. 5 SELF TAP/DRILL SCREW	FULL	1 1/2"
MIN. 1/8" THK A36 STEEL	1/4" GR. 5 SELF TAP/DRILL SCREW	FULL	1 1/2"
MIN. 1/8" THK 6063-T5 ALUM.	1/4" GR. 5 SELF TAP/DRILL SCREW	FULL	1 1/2"
(3) C-90 CMU/2500 PSI CONCRETE	(2) 1/4" CONCRETE SCREW	1 1/2"	2 1/2"
MOUNTING CLIP SCREWS			
MIN. 2X_ WOOD FRAME OR BUCK (MIN. GR. 3 & G=0.55)	NO. 8 X 1 1/2" SMS	1 3/8"	1/2"
MIN. 1/8" THK A36 STEEL	NO. 8 GR. 5 SELF TAP/DRILL SCREW	FULL	1/2"
MIN. 1/8" THK 6063-T5 ALUM.	NO. 8 GR. 5 SELF TAP/DRILL SCREW	FULL	1/2"

(1) SUPPORTING SUBSTRATE DEPTH SHALL BE SUCH THAT ALL DOOR FRAME/SILL MEMBER EDGES DO NOT EXTEND MORE THAN 1 1/2" PAST THE SUPPORTING SUBSTRATE EDGES.
(2) CONCRETE SCREWS SHALL BE ELCO ULTRACONS (C.S.), ELCO CRETE-FLEX (S.S.), ITW RAMSET/RED HEAD TAPCONS (C.S. OR S.S.) OR HILTI KWIK-CON II (C.S OR S.S.).
(3) CMU IS APPLICABLE AT SIDES ONLY (NOT AT HEAD OR SILL)

CORNER CONSTRUCTION:

FRAME HEAD TO JAMB: JAMB MEMBERS ARE COPED, BUTTED & JOINED TO HEAD WITH NO. 10" X 4 3/4" WOOD SCREWS & GLUED/SEALED WITH BINDAN D4; (6 SCREWS REQ'D WITH 4 & 3 PANEL DEEP FRAMES, 4 SCREWS REQ'D WITH 2 PANEL DEEP FRAMES & 3 SCREWS REQ'D WITH 1 PANEL DEEP FRAMES)
FRAME HEAD TO HEAD (90 DEG. CORNER CONDITION): SEE DETAILS ON SHEET 31.
STANDARD SILL TO JAMB OPTION 1: JAMB MEMBERS ARE COPED, BUTTED, JOINED TO SILL WITH M8 X 1 9/16" MACHINE SCREWS THRU THE SILL BASE INTO THE JAMB MEMBERS THREADED INSERT & SEALED WITH SG20 SILICONE (4 SCREWS REQ'D WITH 4 PANEL DEEP FRAMES; 3 SCREWS REQ'D WITH 3 PANEL DEEP FRAMES; 2 SCREWS REQ'D WITH 2 & 1 PANEL DEEP FRAMES).
STANDARD SILL TO JAMB OPTION 2: JAMB MEMBERS ARE SQUARE CUT, BUTTED, JOINED TO SILL WITH M8 X 3 15/16" CYLINDER SCREWS THRU THE SILL BASE INTO THE JAMB MEMBERS DOWELS & SEALED WITH A RUBBER GASKET; (3 SCREWS REQ'D WITH 4 & 3 PANEL DEEP FRAMES; 2 SCREWS REQ'D WITH 2 & 1 PANEL DEEP FRAMES).
FLUSH MOUNT SILL TO JAMB: JAMB MEMBERS ARE SQUARE CUT, BUTTED, JOINED TO SILL WITH M8 (OR NO. 10) X 4 3/4" WOOD SCREWS THRU THE SILL BASE INTO THE JAMB MEMBERS; (5 SCREWS REQ'D WITH 4 & 3 PANEL DEEP FRAMES; 3 SCREWS REQ'D WITH 2 & 1 PANEL DEEP FRAMES). ENDS ARE SEALED WITH SG20 SILICONE SEALANT.
FLUSH MOUNT SILL TO FLUSH MOUNT SILL (90 DEG. CORNER CONDITION): SEE DETAIL ON SHEET 32
TOP RAIL TO STILE: MEMBERS ARE COPPED, BUTTED, JOINED WITH SIX(6) 0.394" X 3.150" DOWELS & GLUED/SEALED WITH BINDAN D4.
BOTTOM RAIL TO STILE: MEMBERS ARE COPPED, BUTTED, JOINED WITH TEN(10) 0.394" X 3.150" DOWELS & GLUED/SEALED WITH BINDAN D4.
FRAME CLAD: MEMBERS ARE MITERED TOGETHER & WELDED ON THE INTERIOR SIDE.
SASH CLAD (TOP RAIL TO STILE): MEMBERS ARE MITERED TOGETHER & WELDED TOGETHER ON THE INTERIOR SIDE.
SASH CLAD (BOTTOM RAIL TO STILE): MEMBERS ARE COPED, BUTTED & WELDED TOGETHER ON THE INTERIOR SIDE.

WARREN W. SCHAEFER LICENSE No. 44135 STATE OF FLORIDA PROFESSIONAL ENGINEER

DRAWN BY: W.R.W.	CHECKED BY: W.W.S.
PLOT: 1=24	DATE: 04/04/09

NO.	REVISION DESCRIPTION	BY	DATE
A1	CHANGE CONSULTANTS ADDRESS	W.R.M.	10/19/11
B1	ADDED CORNER CONDITION, FLUSH MOUNT SILL & MOTOR OPERATOR	W.R.M.	06/13/13

DRAWING TITLE: LIFT & SLIDE BRONZE CLAD SLIDING GLASS IMPACT DOORS

MANUFACTURER: PEETZ WINDOWS & DOORS, 15951 S.W. 41ST STREET, SUITE 150, WESTON, FL 33331, 954-659-3887

CONSULTANTS: W. W. SCHAEFER ENGINEERING & CONSULTING, P.A. (CA 6809), 7480 150TH COURT NORTH, PALM BEACH GARDENS, FL 33418, PHONE: 561-744-3424

CERTIFICATION: NOV 06 2013
WARREN W. SCHAEFER, P.E. P.E. NO. 44135

DRAWING NO. 1632 REV. B

SHEET NO. 1 OF 38

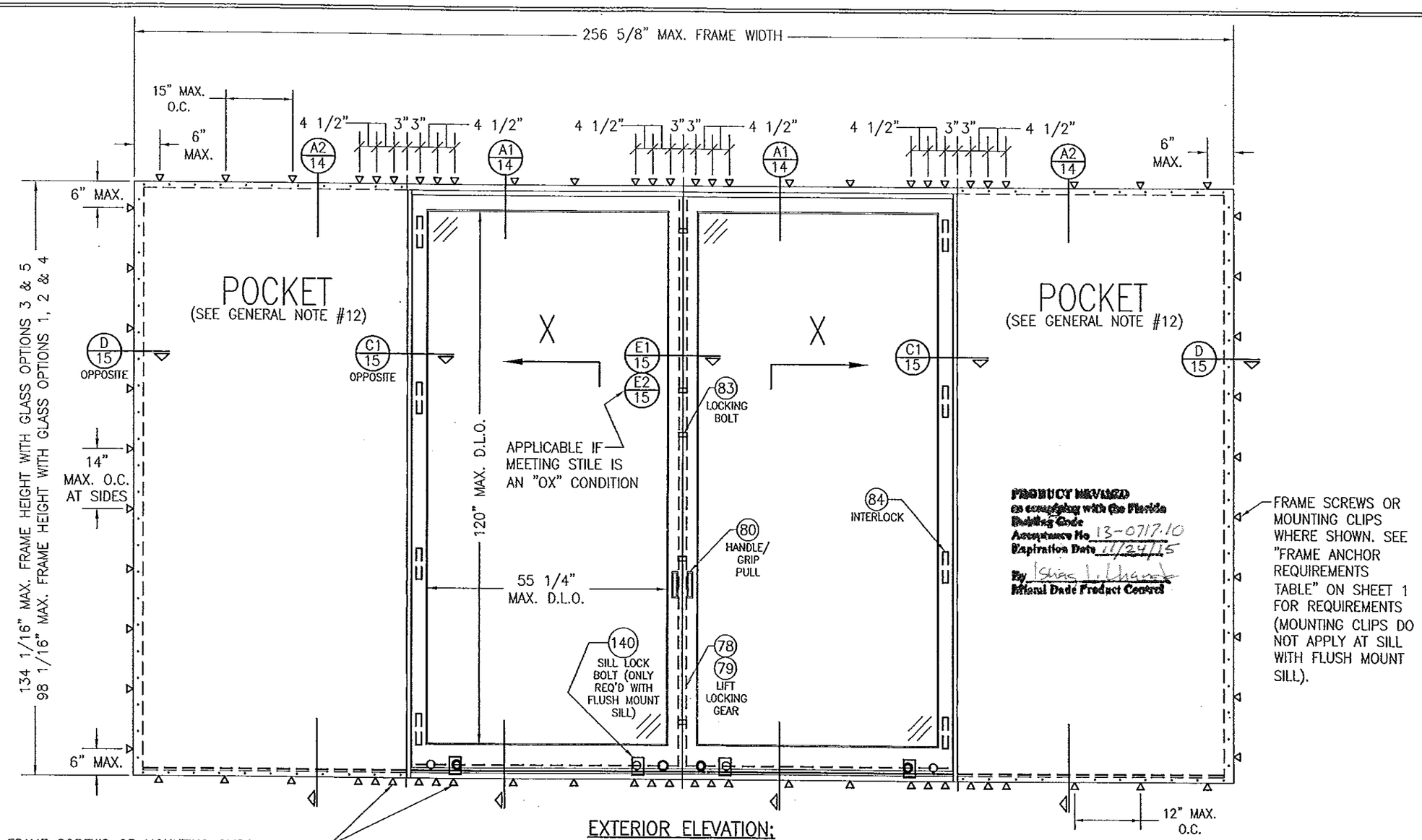

FRAME SCREWS OR MOUNTING CLIPS WHERE SHOWN AT MEETING STILE ENDS (4 ANCHORS REQ'D WHEN FRAME HEIGHT IS 100" OR LESS OR PANEL WIDTHS ARE 36" OR LESS; 6 ANCHORS REQ'D OTHERWISE). SEE "FRAME ANCHOR REQUIREMENTS TABLE" ON SHEET 1 FOR REQUIREMENTS (MOUNTING CLIPS DO NOT APPLY WITH FLUSH MOUNT SILL).

EXTERIOR ELEVATION: 1 PANEL DEEP X-X DOOR WITH POCKETS

SCALE: 1/2" = 1'-0"

FOR SIMPLIFICATION, ONLY FRAME & SASH PROJECTION LINES ARE SHOWN FOR THESE ELEVATIONS.

WARREN W. SCHAEFER LICENSE No 44135 STATE OF FLORIDA PROFESSIONAL ENGINEER

DRAWN BY: W.R.M.	CHECKED BY: W.W.S.
PLOT: 1=24	DATE: 04/04/09

NO.	REVISION DESCRIPTION	BY	DATE

DRAWING TITLE: LIFT & SLIDE BRONZE CLAD SLIDING GLASS IMPACT DOORS

MANUFACTURER: PEETZ WINDOWS & DOORS, 15951 S.W. 41ST STREET; SUITE 150, WESTON, FL 33331, 954-659-3887

CONSULTANTS: W. W. SCHAEFER ENGINEERING & CONSULTING, P.A. (CA 6809), 7480 150TH COURT NORTH, PALM BEACH GARDENS, FL 33418, PHONE: 561-744-3424

CERTIFICATION: NOV 06 2013

WARREN W. SCHAEFER, P.E. P.E. NO. 44135

DRAWING NO.	REV.
1632	B

SHEET NO. 2 OF 38

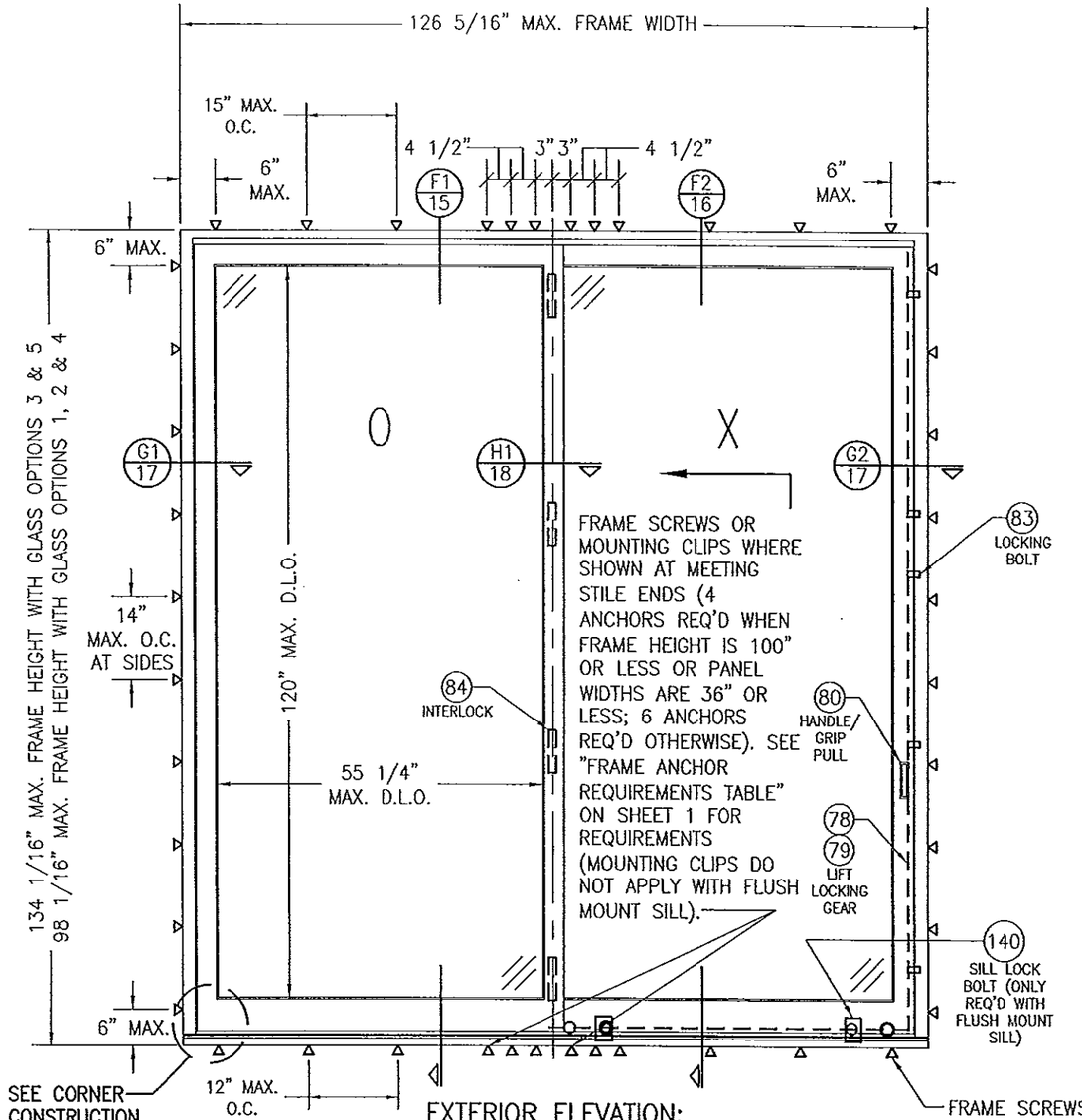

EXTERIOR ELEVATION:
2 PANEL DEEP OX DOOR WITHOUT POCKETS
SCALE: 1/2" = 1'-0"
SEE APPROVED CONFIGURATIONS ON SHEET 13 FOR ADDITIONAL 2-DEEP PANEL CONFIGURATIONS

FRAME SCREWS OR MOUNTING CLIPS WHERE SHOWN. SEE "FRAME ANCHOR REQUIREMENTS TABLE" ON SHEET 1 FOR REQUIREMENTS (MOUNTING CLIPS DO NOT APPLY AT SILL WITH FLUSH MOUNT SILL).

FOR SIMPLIFICATION, ONLY FRAME & SASH PROJECTION LINES ARE SHOWN FOR THESE ELEVATIONS

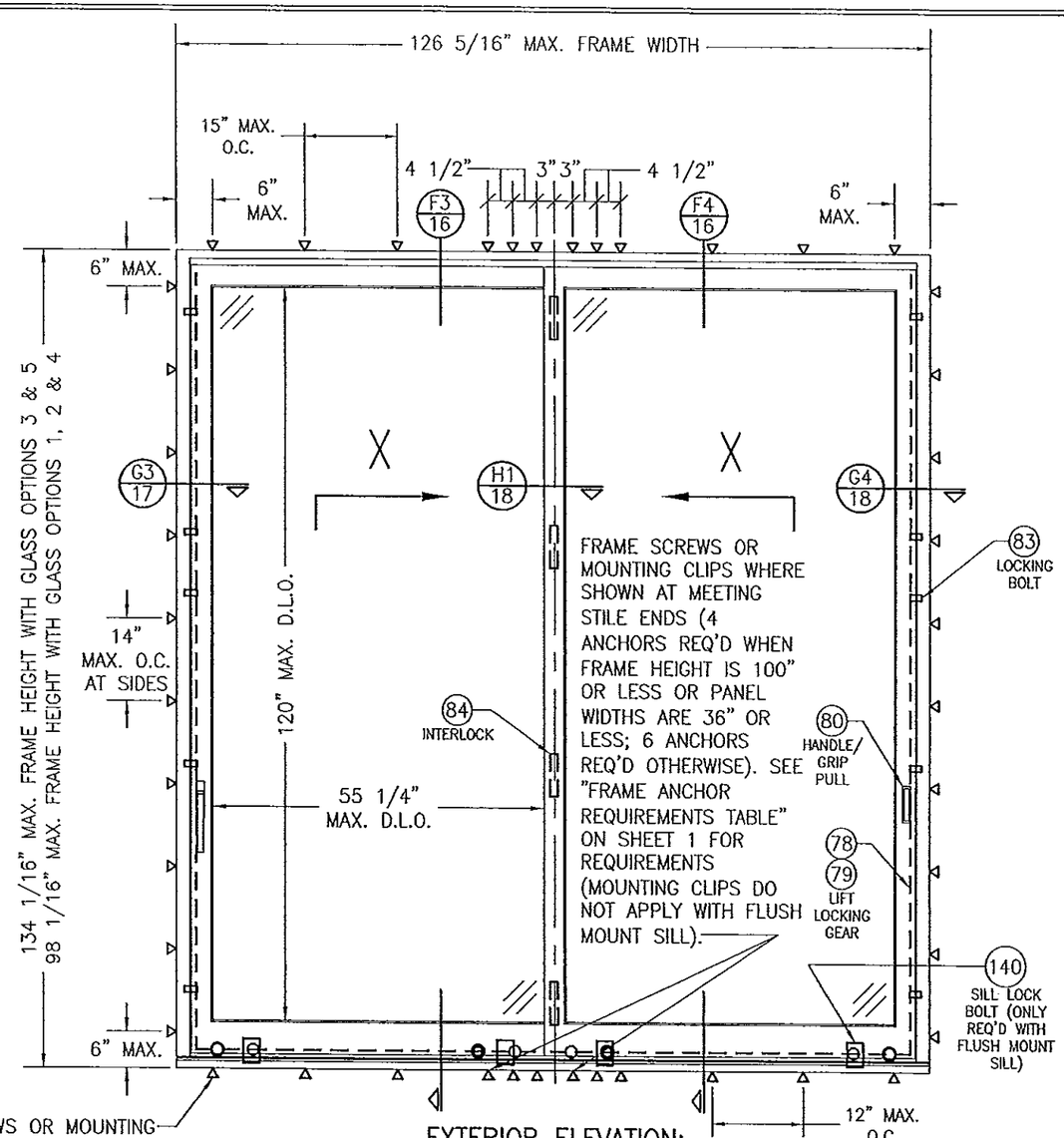

EXTERIOR ELEVATION:
2 PANEL DEEP XX DOOR WITHOUT POCKETS
SCALE: 1/2" = 1'-0"
SEE APPROVED CONFIGURATIONS ON SHEET 13 FOR ADDITIONAL 2-DEEP PANEL CONFIGURATIONS

PRODUCT APPROVED
In compliance with the Florida Building Code
Application No. 13-0212.10
Expiration Date: 11/24/15
By: [illegible]
Miami-Dade Product Control

WARREN W. SCHAEFER LICENSE No. 44135 STATE OF FLORIDA PROFESSIONAL ENGINEER

DRAWN BY: W.R.M.	CHECKED BY: W.W.S.
PLOT: 1=24	DATE: 04/04/09

NO.	REVISION DESCRIPTION	BY	DATE

DRAWING TITLE
LIFT & SLIDE BRONZE CLAD SLIDING GLASS IMPACT DOORS

MANUFACTURER
PEETZ WINDOWS & DOORS
15951 S.W. 41ST STREET; SUITE 150
WESTON, FL 33331
954-659-3887

CONSULTANTS
W. W. SCHAEFER ENGINEERING & CONSULTING, P.A. (CA 6809)
7480 150TH COURT NORTH
PALM BEACH GARDENS, FL 33418
PHONE: 561-744-3424

CERTIFICATION
NOV 06 2013
WARREN W. SCHAEFER, P.E.
P.E. NO. 44135

DRAWING NO. 1632
REV. B
SHEET NO. 3 OF 38

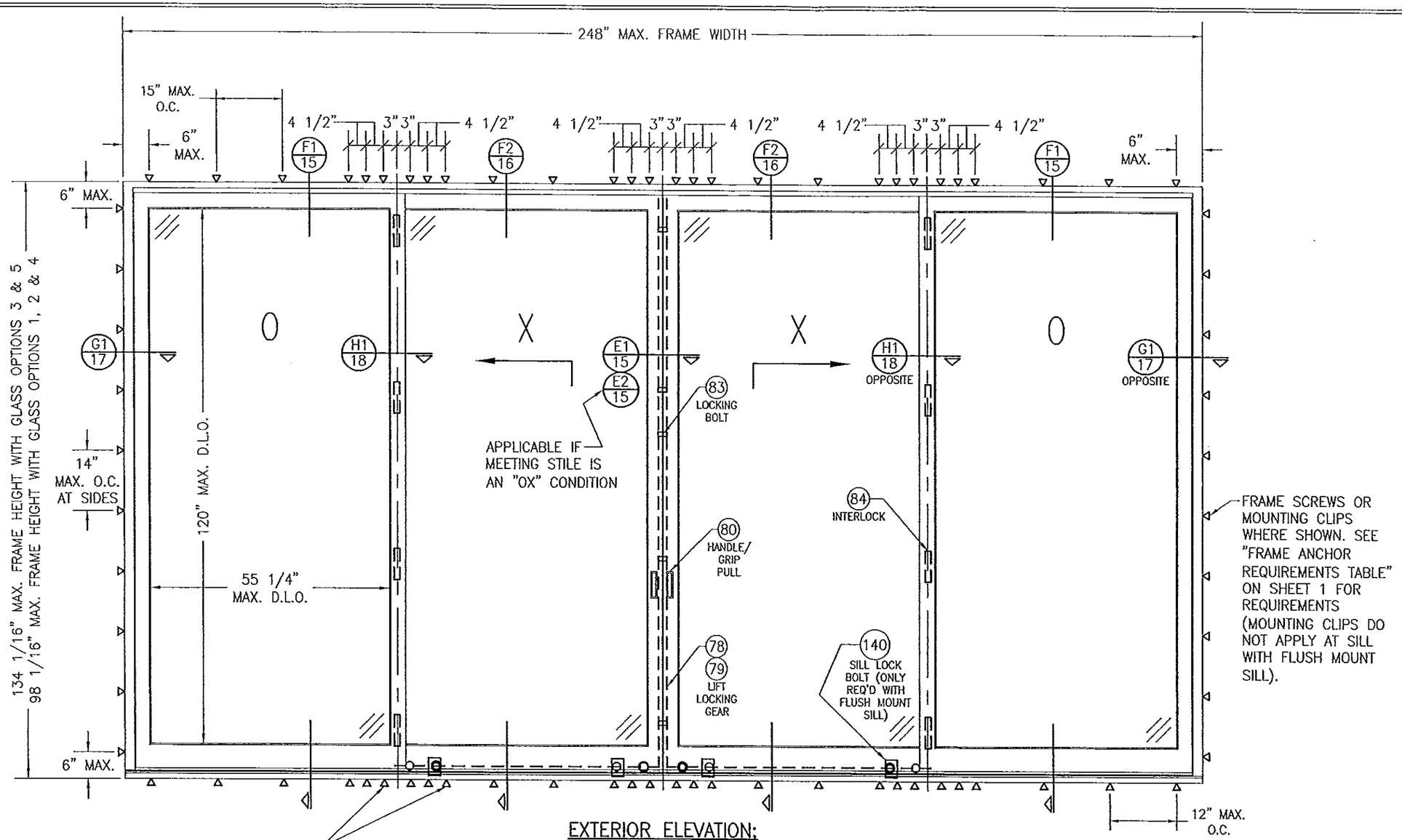

EXTERIOR ELEVATION:
2 PANEL DEEP OXXO DOOR WITHOUT POCKETS

SCALE: 1/2" = 1'-0"

SEE APPROVED CONFIGURATIONS ON SHEET 13 FOR ADDITIONAL 2-DEEP PANEL CONFIGURATIONS

FOR SIMPLIFICATION, ONLY FRAME & SASH PROJECTION LINES ARE SHOWN FOR THESE ELEVATIONS

PRODUCT REVISED
in complying with the Florida Building Code
Acceptance No. 13-0717.10
Expiration Date 11/24/15
By [signature]
Miami Dade/Product Control

WARREN W. SCHAEFER LICENSE No. 44135 STATE OF FLORIDA PROFESSIONAL ENGINEER

DRAWN BY: W.R.U.	CHECKED BY: W.W.S.
PLOT: 1=24	DATE: 04/04/09

NO.	REVISION DESCRIPTION	BY	DATE

DRAWING TITLE
LIFT & SLIDE BRONZE CLAD SLIDING GLASS IMPACT DOORS

MANUFACTURER
PEETZ WINDOWS & DOORS
15951 S.W. 41ST STREET; SUITE 150
WESTON, FL 33331
954-659-3887

CONSULTANTS
W. W. SCHAEFER ENGINEERING & CONSULTING, P.A. (CA 6809)
7480 150TH COURT NORTH
PALM BEACH GARDENS, FL 33418
PHONE: 561-744-3424

CERTIFICATION
NOV 06 2013
WARREN W. SCHAEFER, P.E.
P.E. NO. 44135

DRAWING NO. 1632 REV. B
SHEET NO. 4 OF 38

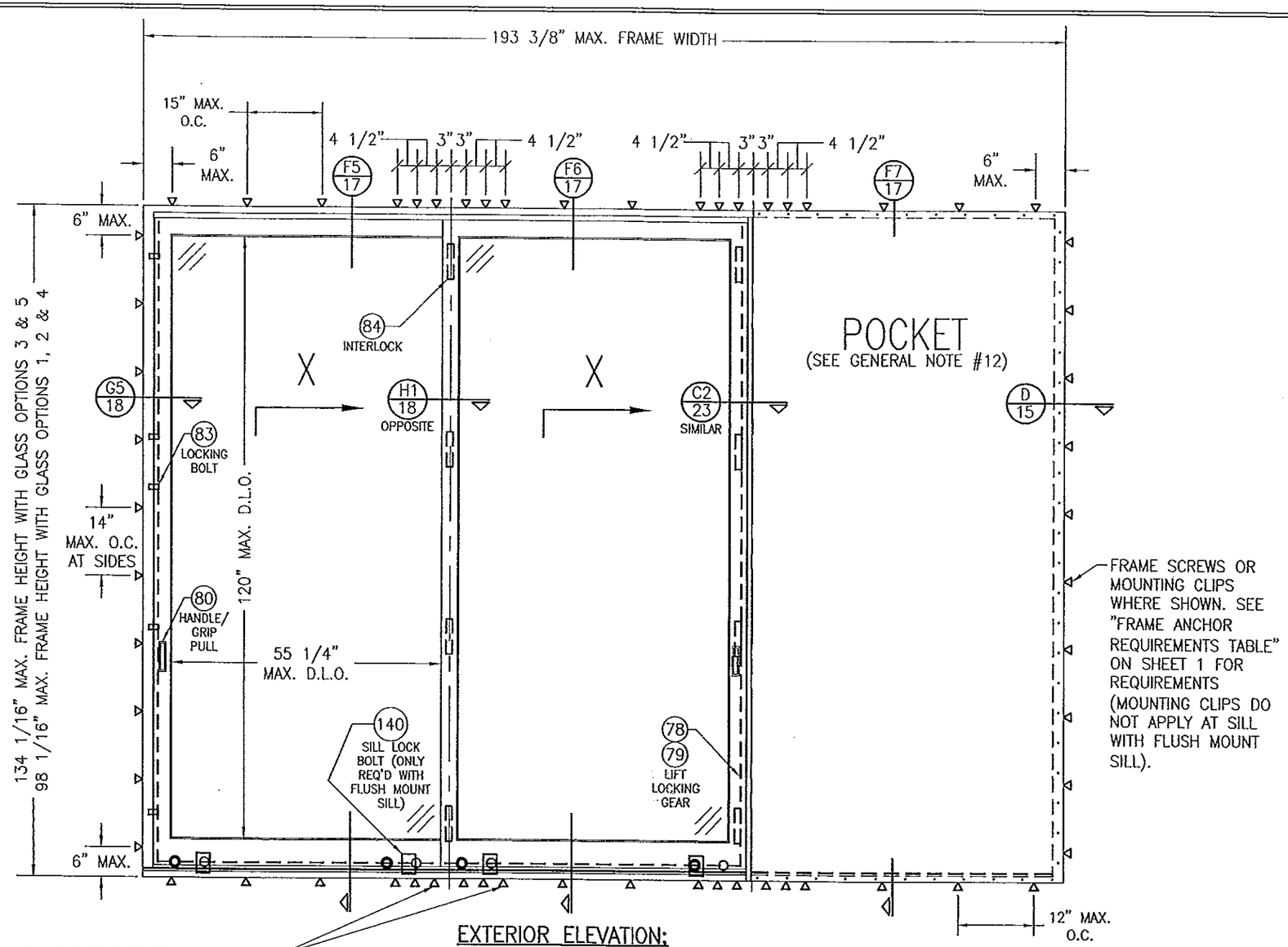

FRAME SCREWS OR MOUNTING CLIPS WHERE SHOWN AT MEETING STILE ENDS (4 ANCHORS REQ'D WHEN FRAME HEIGHT IS 100" OR LESS OR PANEL WIDTHS ARE 36" OR LESS; 6 ANCHORS REQ'D OTHERWISE). SEE "FRAME ANCHOR REQUIREMENTS TABLE" ON SHEET 1 FOR REQUIREMENTS (MOUNTING CLIPS DO NOT APPLY WITH FLUSH MOUNT SILL).

EXTERIOR ELEVATION: 2 PANEL DEEP XX DOOR WITH POCKET

SCALE: 1/2" = 1'-0"

SEE APPROVED CONFIGURATIONS ON SHEET 13 FOR ADDITIONAL 2-DEEP PANEL CONFIGURATIONS

FOR SIMPLIFICATION, ONLY FRAME & SASH PROJECTION LINES ARE SHOWN FOR THESE ELEVATIONS

PRELIMINARY REVIEWED
Notice of Acceptance Letter dated
Date 13-0717.10
Date 11/24/15

WARREN W. SCHAEFER LICENSE No. 44135 STATE OF FLORIDA PROFESSIONAL ENGINEER

DRAWN BY: W.R.M.	CHECKED BY: W.W.S.
PLOT: 1=24	DATE: 04/04/09

NO.	REVISION DESCRIPTION	BY	DATE

DRAWING TITLE
LIFT & SLIDE BRONZE CLAD SLIDING GLASS IMPACT DOORS

MANUFACTURER
PEETZ WINDOWS & DOORS
15951 S.W. 41ST STREET; SUITE 150
WESTON, FL 33331
954-659-3887

CONSULTANTS
W. W. SCHAEFER ENGINEERING & CONSULTING, P.A. (CA 6809)
7480 150TH COURT NORTH
PALM BEACH GARDENS, FL 33418
PHONE: 561-744-3424

CERTIFICATION
NOV 06 2013
WARREN W. SCHAEFER, P.E.
P.E. NO. 44135

DRAWING NO. 1632
REV. B
SHEET NO. 5 OF 38

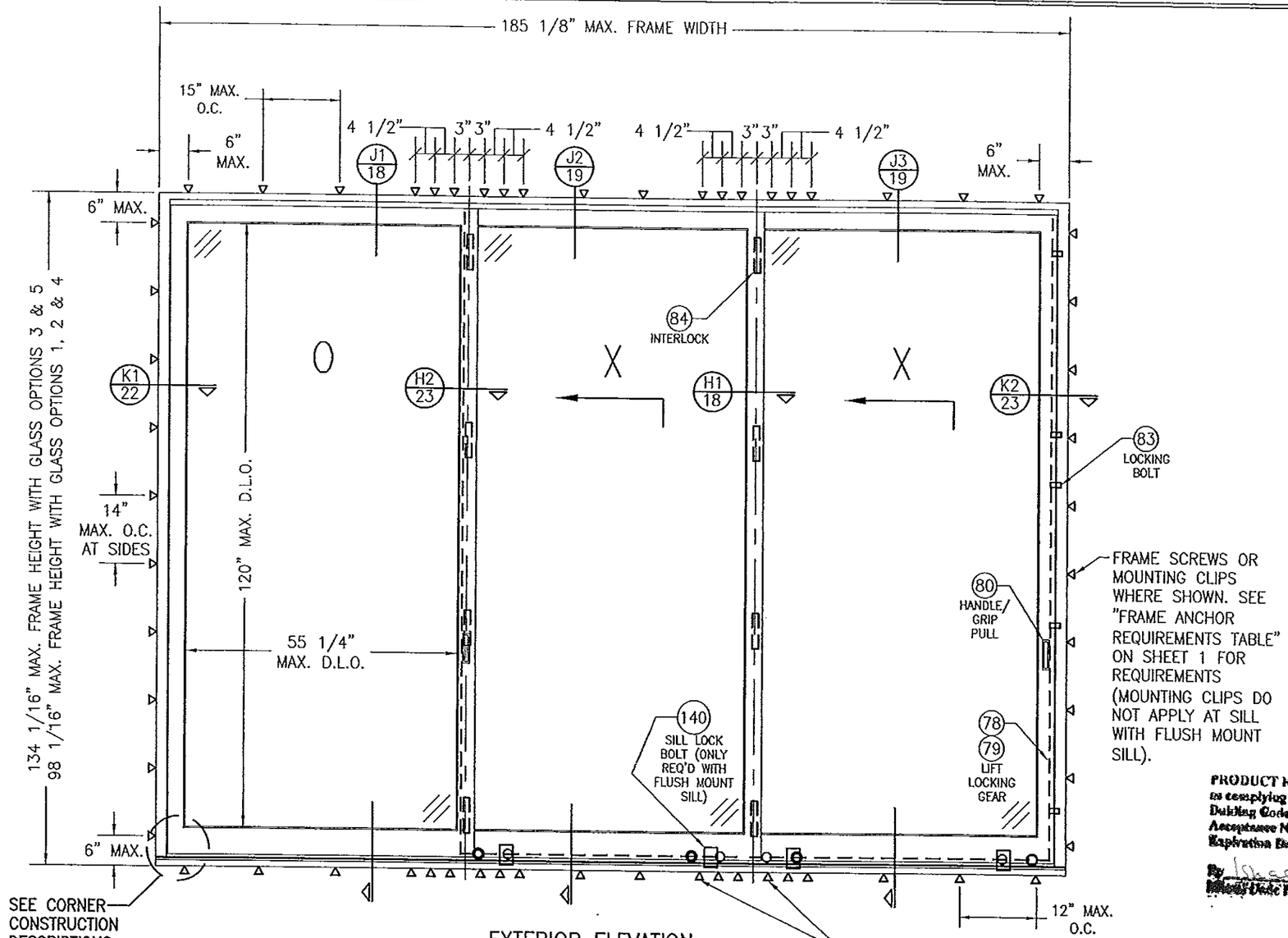

PRODUCT REVISED
to complying with the Florida Building Code
Acceptance No. 13-0717.10
Expiration Date 11/24/15
By
Miami-Dade Product Control

EXTERIOR ELEVATION:
3 PANEL DEEP OXX DOOR WITHOUT POCKETS

SCALE: 1/2" = 1'-0"

SEE APPROVED CONFIGURATIONS ON SHEET 13 FOR ADDITIONAL 3-DEEP PANEL CONFIGURATIONS

FRAME SCREWS OR MOUNTING CLIPS WHERE SHOWN AT MEETING STILE ENDS (4 ANCHORS REQ'D WHEN FRAME HEIGHT IS 100" OR LESS OR PANEL WIDTHS ARE 36" OR LESS; 6 ANCHORS REQ'D OTHERWISE). SEE "FRAME ANCHOR REQUIREMENTS TABLE" ON SHEET 1 FOR REQUIREMENTS (MOUNTING CLIPS DO NOT APPLY WITH FLUSH MOUNT SILL).

FOR SIMPLIFICATION, ONLY FRAME & SASH PROJECTION LINES ARE SHOWN FOR THESE ELEVATIONS

WARREN W. SCHAEFER * LICENSE No. 44135 * STATE OF FLORIDA * PROFESSIONAL ENGINEER

DRAWN BY: W.R.U.	CHECKED BY: W.W.S.
PLOT: 1=24	DATE: 04/04/09

NO.	REVISION DESCRIPTION	BY	DATE

DRAWING TITLE
LIFT & SLIDE BRONZE CLAD SLIDING GLASS IMPACT DOORS

MANUFACTURER
PEETZ WINDOWS & DOORS
15951 S.W. 41ST STREET; SUITE 150
WESTON, FL 33331
954-659-3887

CONSULTANTS
W. W. SCHAEFER ENGINEERING & CONSULTING, P.A. (CA 6809)
7480 150TH COURT NORTH
PALM BEACH GARDENS, FL 33418
PHONE: 561-744-3424

CERTIFICATION
NOV 06 2013
WARREN W. SCHAEFER, P.E.
P.E. NO. 44135

DRAWING NO. 1632 REV. B

SHEET NO. 6 OF 38

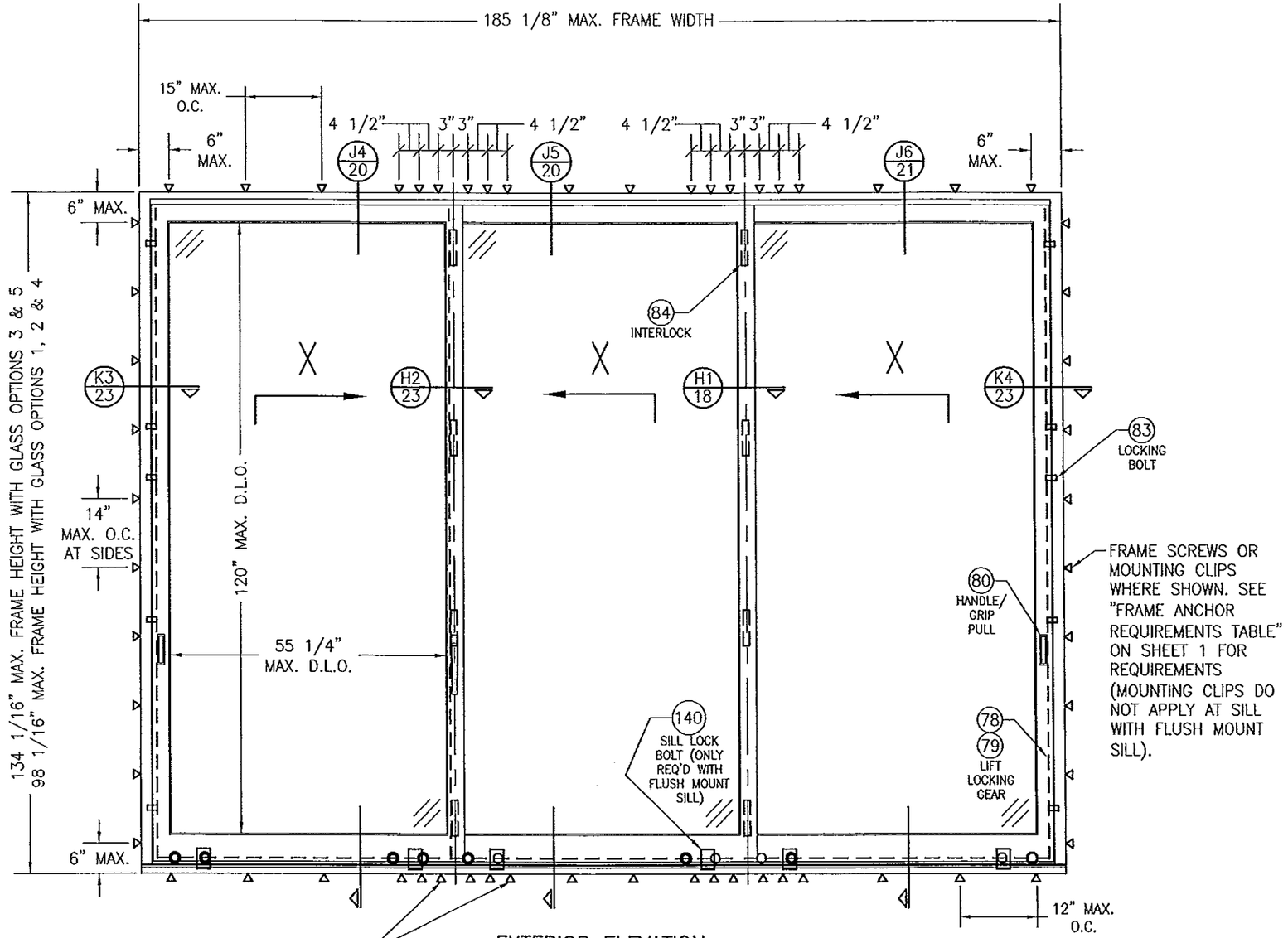

FRAME SCREWS OR MOUNTING CLIPS WHERE SHOWN AT MEETING STILE ENDS (4 ANCHORS REQ'D WHEN FRAME HEIGHT IS 100" OR LESS OR PANEL WIDTHS ARE 36" OR LESS; 6 ANCHORS REQ'D OTHERWISE). SEE "FRAME ANCHOR REQUIREMENTS TABLE" ON SHEET 1 FOR REQUIREMENTS (MOUNTING CLIPS DO NOT APPLY WITH FLUSH MOUNT SILL).

EXTERIOR ELEVATION; 3 PANEL DEEP XXX DOOR WITHOUT POCKETS

SCALE: 1/2" = 1'-0"

SEE APPROVED CONFIGURATIONS ON SHEET 13 FOR ADDITIONAL 3-DEEP PANEL CONFIGURATIONS

FOR SIMPLIFICATION, ONLY FRAME & SASH PROJECTION LINES ARE SHOWN FOR THESE ELEVATIONS

PRODUCT REVISED
to comply with the Florida Building Code
Acceptance No. 13-0717.10
Expiration Date 11/24/15
By [signature]
Miami Dade Product Control

WARREN W. SCHAEFER LICENSE No 44135 STATE OF FLORIDA PROFESSIONAL ENGINEER

DRAWN BY: W.R.W.	CHECKED BY: W.W.S.
PLOT: 1=24	DATE: 04/04/09

NO.	REVISION DESCRIPTION	BY	DATE

DRAWING TITLE
LIFT & SLIDE BRONZE CLAD SLIDING GLASS IMPACT DOORS

MANUFACTURER
PEETZ WINDOWS & DOORS
15951 S.W. 41ST STREET; SUITE 150
WESTON, FL 33331
954-659-3887

CONSULTANTS
W. W. SCHAEFER ENGINEERING & CONSULTING, P.A. (CA 6809)
7480 150TH COURT NORTH
PALM BEACH GARDENS, FL 33418
PHONE: 561-744-3424

CERTIFICATION
NOV 06 2013
WARREN W. SCHAEFER, P.E.
P.E. NO. 44135

DRAWING NO. 1632
REV. B
SHEET NO. 7 OF 38

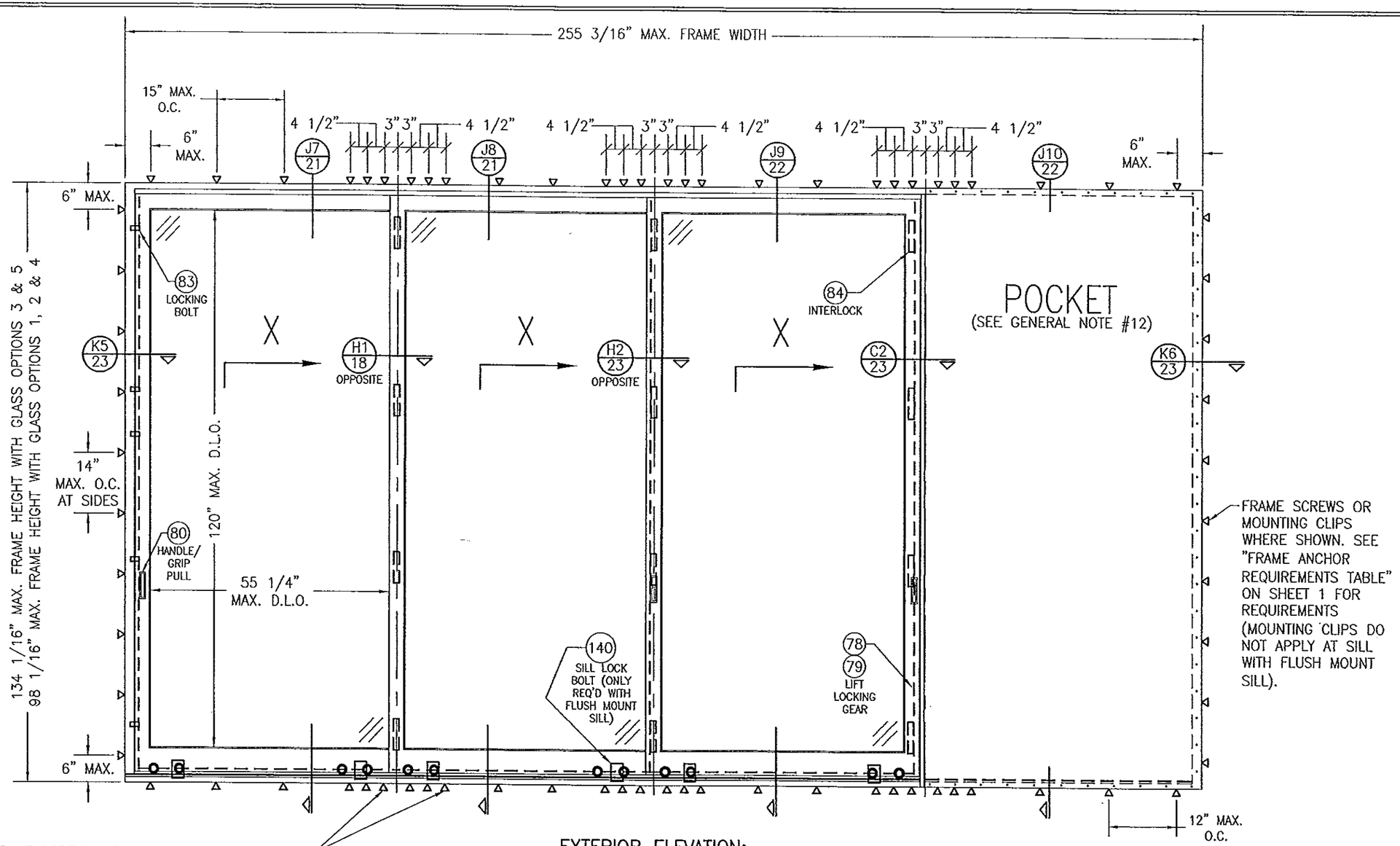

FRAME SCREWS OR MOUNTING CLIPS WHERE SHOWN AT MEETING STILE ENDS (4 ANCHORS REQ'D WHEN FRAME HEIGHT IS 100" OR LESS OR PANEL WIDTHS ARE 36" OR LESS; 6 ANCHORS REQ'D OTHERWISE). SEE "FRAME ANCHOR REQUIREMENTS TABLE" ON SHEET 1 FOR REQUIREMENTS (MOUNTING CLIPS DO NOT APPLY WITH FLUSH MOUNT SILL).

EXTERIOR ELEVATION; 3 PANEL DEEP XXX DOOR WITH POCKET

SCALE: 1/2" = 1'-0"

SEE APPROVED CONFIGURATIONS ON SHEET 13 FOR ADDITIONAL 3-DEEP PANEL CONFIGURATIONS

FOR SIMPLIFICATION, ONLY FRAME & SASH PROJECTION LINES ARE SHOWN FOR THESE ELEVATIONS

PRODUCT REVISED
Acceptance No. 13-0717.10
Expiration Date 11/24/15
By Shaq J. Khan
District Dade Product Control

WARREN W. SCHAEFER LICENSE No. 44135 STATE OF FLORIDA PROFESSIONAL ENGINEER

DRAWN BY: W.R.M.	CHECKED BY: W.W.S.
PLOT: 1=24	DATE: 04/04/09

NO.	REVISION DESCRIPTION	BY	DATE

DRAWING TITLE
LIFT & SLIDE BRONZE CLAD SLIDING GLASS IMPACT DOORS

MANUFACTURER
PEETZ WINDOWS & DOORS
15951 S.W. 41ST STREET; SUITE 150
WESTON, FL 33331
954-659-3887

CONSULTANTS
W. W. SCHAEFER ENGINEERING & CONSULTING, P.A. (CA 6809)
7480 150TH COURT NORTH
PALM BEACH GARDENS, FL 33418
PHONE: 561-744-3424

CERTIFICATION
NOV 06 2013
WARREN W. SCHAEFER, P.E.
P.E. NO. 44135

DRAWING NO. 1632 REV. B

SHEET NO. 8 OF 38

365 5/8" MAX. FRAME WIDTH

15" MAX. O.C.

6" MAX.

4 1/2" 3" 3" 4 1/2" 4 1/2" 3" 3" 4 1/2" 4 1/2" 3" 3" 4 1/2" 4 1/2" 3" 3" 4 1/2" 4 1/2" 3" 3" 4 1/2"

J1 18 J2 19 J3 19 J3 19 J2 19 J1 18

6" MAX.

6" MAX.

134 1/16" MAX. FRAME HEIGHT WITH GLASS OPTIONS 3 & 5
98 1/16" MAX. FRAME HEIGHT WITH GLASS OPTIONS 1, 2 & 4

O X X X X O

84 INTERLOCK

K1 22 H2 23 H1 18 E1 15 E2 15 H1 18 OPPOSITE H2 23 OPPOSITE K1 22 OPPOSITE

14" MAX. O.C. AT SIDES

120" MAX. D.L.O.

55 1/4" MAX. D.L.O.

APPLICABLE IF MEETING STILE IS AN "OX" CONDITION

83 LOCKING BOLT

80 HANDLE/ GRIP PULL

140 SILL LOCK BOLT (ONLY REQ'D WITH FLUSH MOUNT SILL)

78 79 LIFT LOCKING GEAR

6" MAX.

12" MAX. O.C.

FRAME SCREWS OR MOUNTING CLIPS WHERE SHOWN AT MEETING STILE ENDS (4 ANCHORS REQ'D WHEN FRAME HEIGHT IS 100" OR LESS OR PANEL WIDTHS ARE 36" OR LESS; 6 ANCHORS REQ'D OTHERWISE). SEE "FRAME ANCHOR REQUIREMENTS TABLE" ON SHEET 1 FOR REQUIREMENTS (MOUNTING CLIPS DO NOT APPLY WITH FLUSH MOUNT SILL).

FRAME SCREWS OR MOUNTING CLIPS WHERE SHOWN. SEE "FRAME ANCHOR REQUIREMENTS TABLE" ON SHEET 1 FOR REQUIREMENTS (MOUNTING CLIPS DO NOT APPLY AT SILL WITH FLUSH MOUNT SILL).

EXTERIOR ELEVATION: 3 PANEL DEEP OXXXXO DOOR WITHOUT POCKETS

SCALE: N.T.S.

SEE APPROVED CONFIGURATIONS ON SHEET 13 FOR ADDITIONAL 3-DEEP PANEL CONFIGURATIONS

FOR SIMPLIFICATION, ONLY FRAME & SASH PROJECTION LINES ARE SHOWN FOR THESE ELEVATIONS

PRODUCT REVIEWED as complying with the Florida Building Code
Acceptance No. 13-0717.10
Expiration Date 11/24/15
By [illegible]
Miami-Dade Product Control

WARREN W. SCHAEFER LICENSE NO. 44135 STATE OF FLORIDA PROFESSIONAL ENGINEER

NO.	REVISION DESCRIPTION	BY	DATE

DRAWN BY: W.R.M. | CHECKED BY: W.W.S.
PLOT: 1=24 | DATE: 04/04/09

DRAWING TITLE: LIFT & SLIDE BRONZE CLAD SLIDING GLASS IMPACT DOORS

MANUFACTURER: PEETZ WINDOWS & DOORS, 15951 S.W. 41ST STREET; SUITE 150, WESTON, FL 33331, 954-659-3887

CONSULTANTS: W. W. SCHAEFER ENGINEERING & CONSULTING, P.A. (CA 6809), 7480 150TH COURT NORTH, PALM BEACH GARDENS, FL 33418, PHONE: 561-744-3424

CERTIFICATION: NOV 06 2013 — WARREN W. SCHAEFER, P.E. NO. 44135

DRAWING NO. 1632 | REV. B

SHEET NO. 9 OF 38

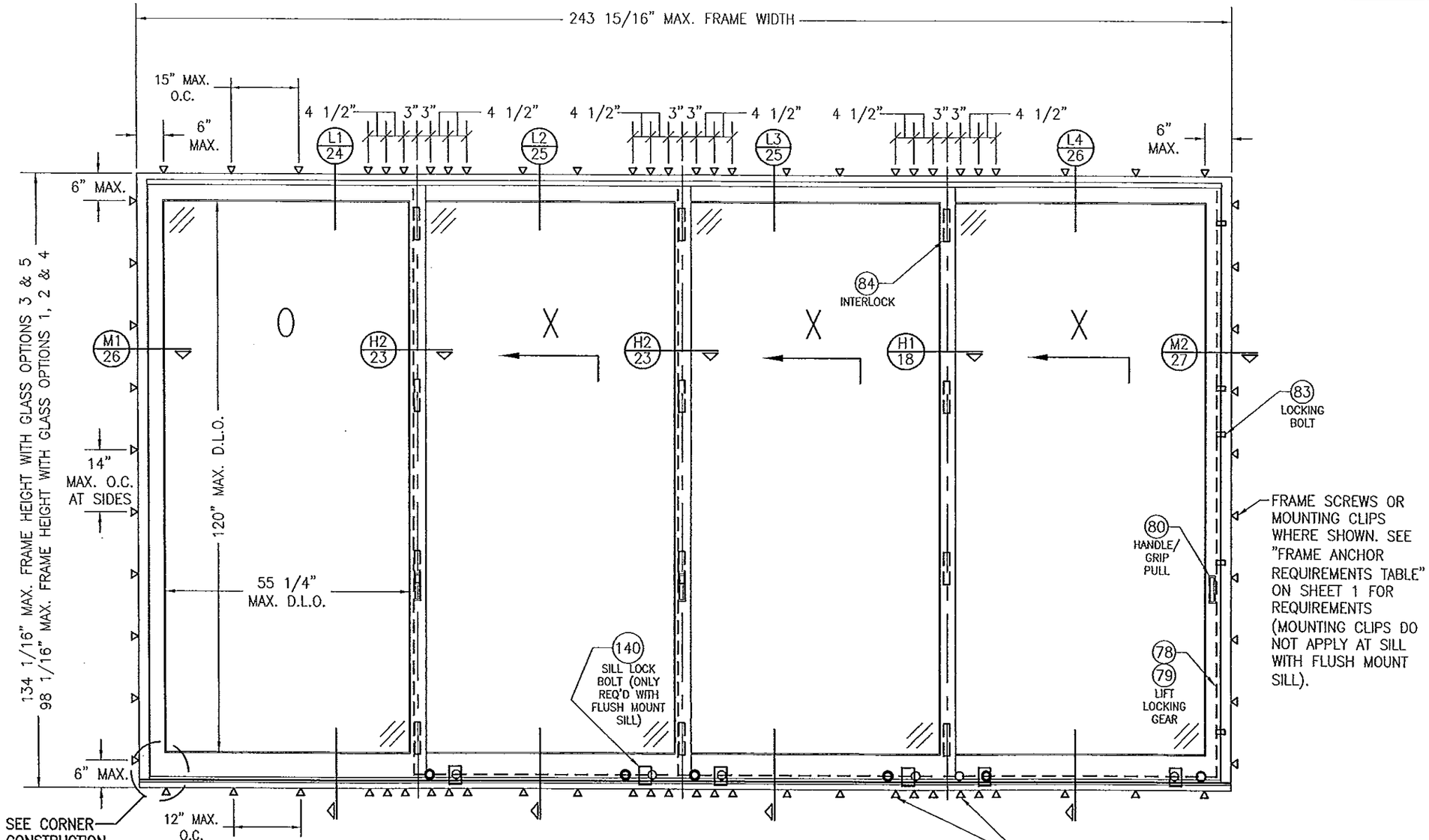

EXTERIOR ELEVATION; 4 PANEL DEEP OXXX DOOR

SCALE: 1/2" = 1'-0"

SEE APPROVED CONFIGURATIONS ON SHEET 13 FOR ADDITIONAL 4-DEEP PANEL CONFIGURATIONS

FOR SIMPLIFICATION, ONLY FRAME & SASH PROJECTION LINES ARE SHOWN FOR THESE ELEVATIONS

FRAME SCREWS OR MOUNTING CLIPS WHERE SHOWN AT MEETING STILE ENDS (4 ANCHORS REQ'D WHEN FRAME HEIGHT IS 100" OR LESS OR PANEL WIDTHS ARE 36" OR LESS; 6 ANCHORS REQ'D OTHERWISE). SEE "FRAME ANCHOR REQUIREMENTS TABLE" ON SHEET 1 FOR REQUIREMENTS (MOUNTING CLIPS DO NOT APPLY WITH FLUSH MOUNT SILL).

PRODUCT REVISED
as complying with the Florida Building Code
Acceptance No. 13-0717.10
Expiration Date 11/24/15
By [signature]
Miami Dade Product Control

WARREN W. SCHAEFER LICENSE No 44135 STATE OF FLORIDA PROFESSIONAL ENGINEER

DRAWN BY: W.R.M.	CHECKED BY: W.W.S.
PLOT: 1=24	DATE: 04/04/09

NO.	REVISION DESCRIPTION	BY	DATE

DRAWING TITLE
LIFT & SLIDE BRONZE CLAD SLIDING GLASS IMPACT DOORS

MANUFACTURER
PEETZ WINDOWS & DOORS
15951 S.W. 41ST STREET; SUITE 150
WESTON, FL 33331
954-659-3887

CONSULTANTS
W. W. SCHAEFER ENGINEERING & CONSULTING, P.A. (CA 6809)
7480 150TH COURT NORTH
PALM BEACH GARDENS, FL 33418
PHONE: 561-744-3424

CERTIFICATION
NOV 06 2013
WARREN W. SCHAEFER, P.E.
P.E. NO. 44135

DRAWING NO. 1632 REV. B

SHEET NO. 10 OF 38

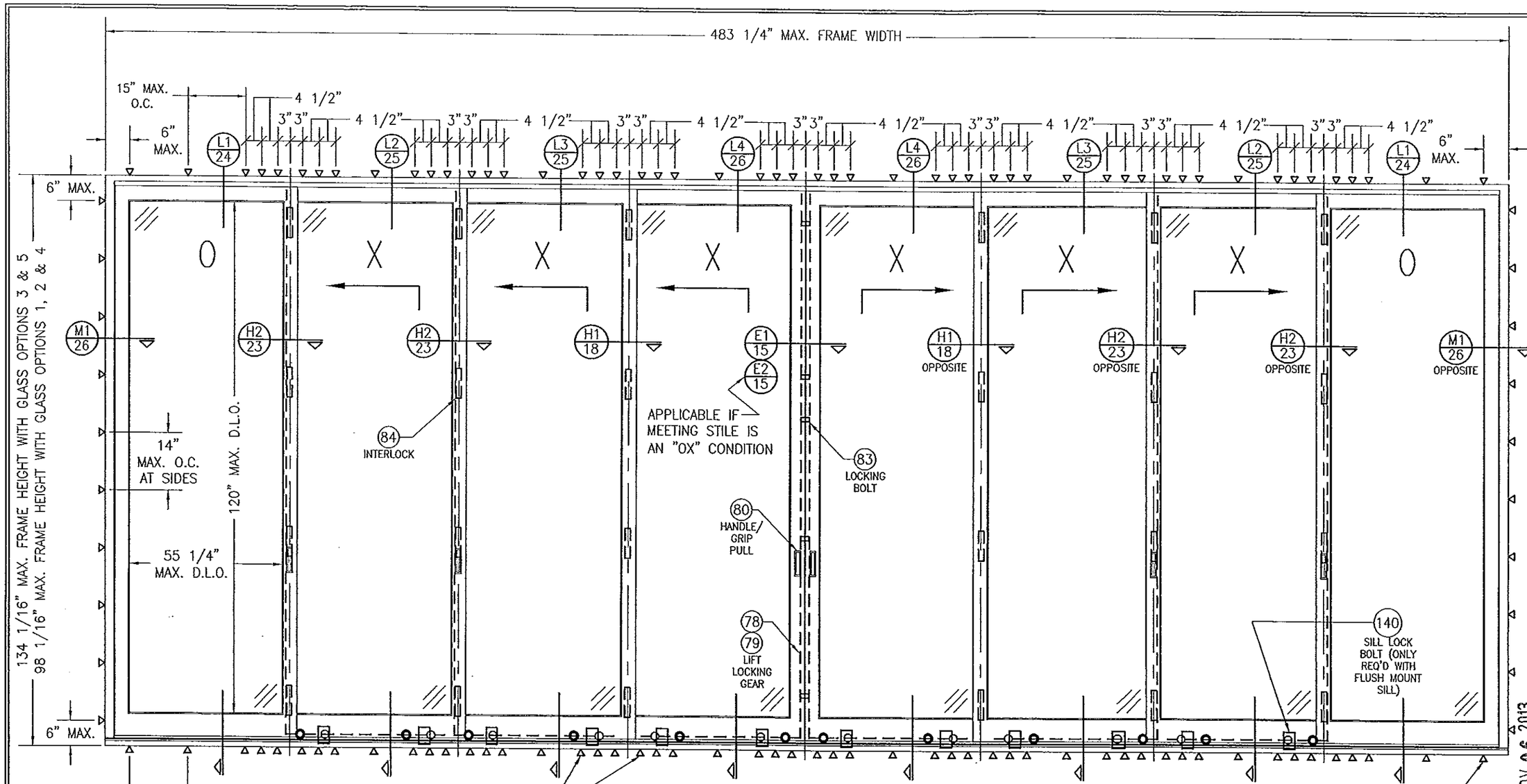

FRAME SCREWS OR MOUNTING CLIPS WHERE SHOWN AT MEETING STILE ENDS (4 ANCHORS REQ'D WHEN FRAME HEIGHT IS 100" OR LESS OR PANEL WIDTHS ARE 36" OR LESS; 6 ANCHORS REQ'D OTHERWISE). SEE "FRAME ANCHOR REQUIREMENTS TABLE" ON SHEET 1 FOR REQUIREMENTS (MOUNTING CLIPS DO NOT APPLY WITH FLUSH MOUNT SILL).

EXTERIOR ELEVATION: 4 PANEL DEEP OXXXXXXO DOOR

SCALE: N.T.S.

SEE APPROVED CONFIGURATIONS ON SHEET 13 FOR ADDITIONAL 4-DEEP PANEL CONFIGURATIONS

FOR SIMPLIFICATION, ONLY FRAME & SASH PROJECTION LINES ARE SHOWN FOR THESE ELEVATIONS

FRAME SCREWS OR MOUNTING CLIPS WHERE SHOWN. SEE "FRAME ANCHOR REQUIREMENTS TABLE" ON SHEET 1 FOR REQUIREMENTS (MOUNTING CLIPS DO NOT APPLY AT SILL WITH FLUSH MOUNT SILL).

PRODUCT REVIEWED
Acceptance No. 13-0717.10
Expiration Date 11/24/15

NOV 06 2013

WARREN W. SCHAEFER LICENSE No. 44135 PROFESSIONAL ENGINEER STATE OF FLORIDA

NO.	REVISION DESCRIPTION	BY	DATE

DRAWN BY: W.R.M.
CHECKED BY: W.W.S.
PLOT: 1=24
DATE: 04/04/09

DRAWING TITLE: LIFT & SLIDE BRONZE CLAD SLIDING GLASS IMPACT DOORS

MANUFACTURER: PEETZ WINDOWS & DOORS, 15951 S.W. 41ST STREET; SUITE 150, WESTON, FL 33331, 954-659-3887

CONSULTANTS: W. W. SCHAEFER ENGINEERING & CONSULTING, P.A. (CA 6809), 7480 150TH COURT NORTH, PALM BEACH GARDENS, FL 33418, PHONE: 561-744-3424

CERTIFICATION: NOV 06 2013, WARREN W. SCHAEFER, P.E. NO. 44135

DRAWING NO. 1632
REV. B
SHEET NO. 11 OF 38

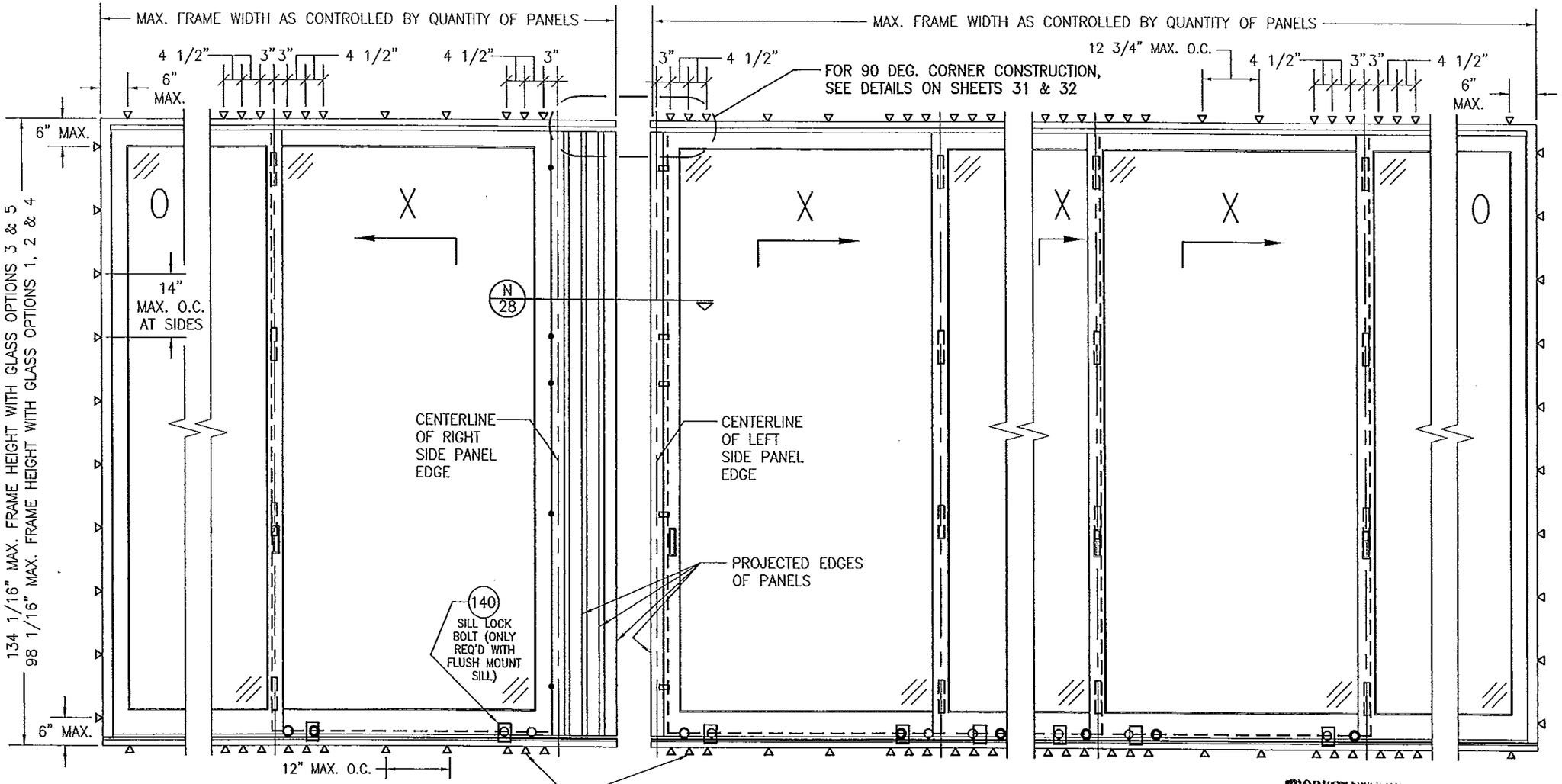

EXTERIOR ELEVATION "A–A":
2 PANEL DEEP OX DOOR
SCALE: 1/2" = 1'–0"

EXTERIOR ELEVATION "B–B":
4 PANEL DEEP XXXO DOOR
SCALE: 1/2" = 1'–0"

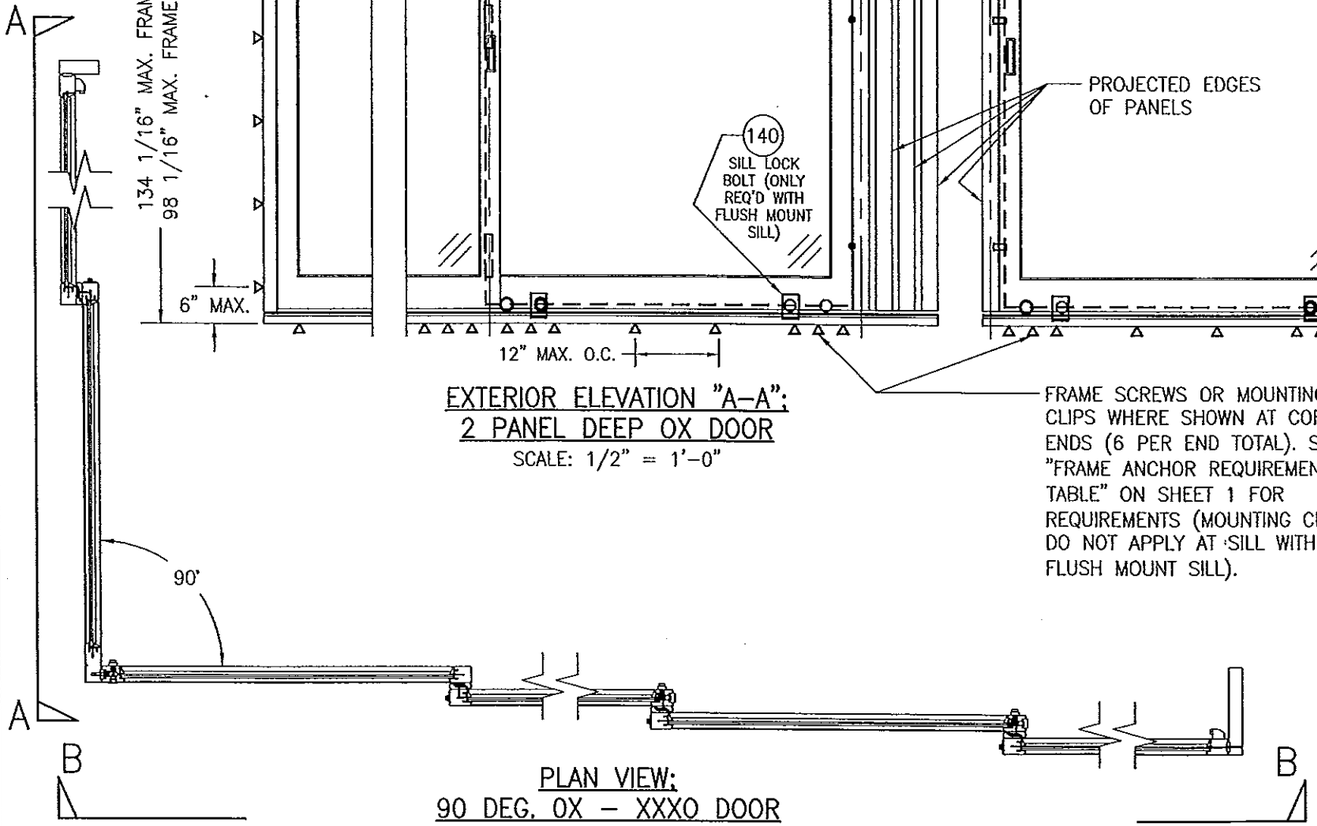

PLAN VIEW:
90 DEG. OX – XXXO DOOR
SCALE: 1/4" = 1'–0"

PRODUCT REVISED
as complying with the Florida Building Code
Acceptance No. 13-0717.10
Expiration Date 11/24/15
By
Miami-Dade Product Control

90 DEG. UNIT NOTES:

1. FOR ALL DETAIL NOT SHOWN, SEE INDIVIDUAL UNIT ELEVATIONS.
2. OX–XXXO UNIT IS SHOWN. SEE APPROVED CONFIGURATIONS ON SHEET 13 FOR ALL APPLICABLE CONDITIONS AT EITHER SIDE OF THE CORNER.
3. 90 DEGREE CONDITION ONLY APPLIES WHEN FLUSH MOUNT SILL IS USED (NOT APPLICABLE WITH STANDARD SLOPED SILL).

WARREN W. SCHAEFER LICENSE NO. 44135 STATE OF FLORIDA PROFESSIONAL ENGINEER

NOV 06 2013

DRAWN BY: W.R.M.	CHECKED BY: W.W.S.
PLOT: 1=24	DATE: 01/04/09

NO.	REVISION DESCRIPTION	BY	DATE

DRAWING TITLE
LIFT & SLIDE BRONZE CLAD SLIDING GLASS IMPACT DOORS

MANUFACTURER
PEETZ WINDOWS & DOORS
15951 S.W. 41ST STREET; SUITE 150
WESTON, FL 33331
954–659–3887

CONSULTANTS
W. W. SCHAEFER ENGINEERING & CONSULTING, P.A. (CA 6809)
7480 150TH COURT NORTH
PALM BEACH GARDENS, FL 33418
PHONE: 561–744–3424

CERTIFICATION
WARREN W. SCHAEFER, P.E.
P.E. NO. 44135

DRAWING NO. 1632
REV. B
SHEET NO. 12 OF 38

APPROVED CONFIGURATIONS

CONFIGURATIONS WITHOUT POCKETS

2-PANEL DEEP CONDITIONS

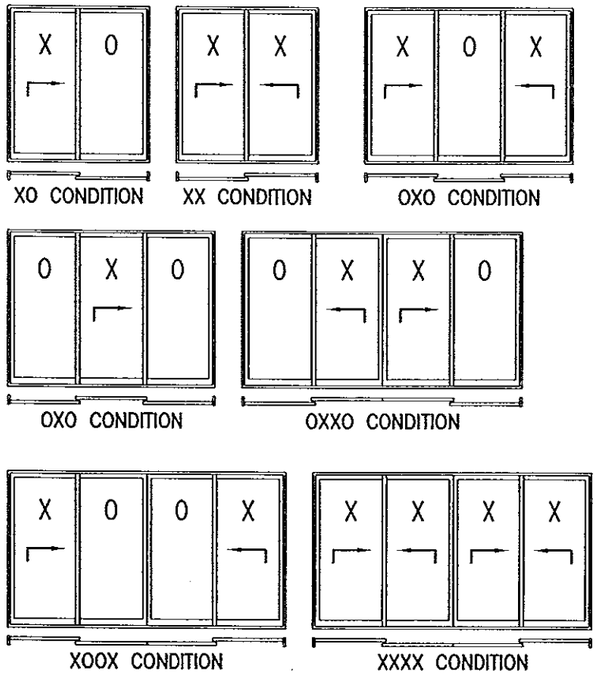

3-PANEL DEEP CONDITIONS

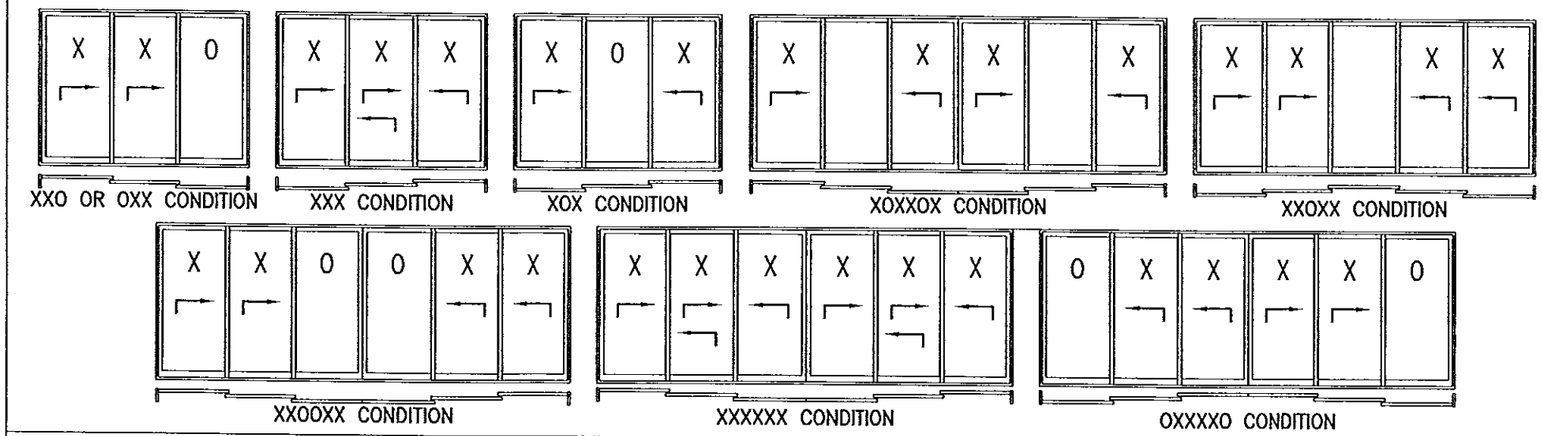

4-PANEL DEEP CONDITIONS

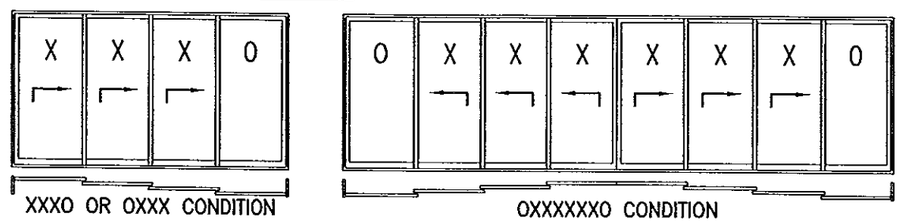

CONDITIONS SHOWN ARE THE MAJORITY OF THOSE USED. OTHER CONDITIONS OF "O" & "X" PANELS APPLY PROVIDING THEY ARE WITHIN THE SCOPE OF THE DETAILS WITHIN THIS DRAWING.

WHILE UP TO 4-PANEL DEEP CONDITIONS IN ONE OPENING ARE SHOWN, THERE IS NO LIMIT TO THE NUMBER OF PANELS IN DEPTH WHEN THE FLUSH MOUNT SILL IS USED (OVER 4-PANELS DEEP IS NOT APPLICABLE WHEN THE STANDARD SILL IS USED). MORE THAN 4-PANEL DEEP CONDITIONS WILL REQUIRE ONE OR MORE ADDITIONAL ROWS OF FRAME ANCHORS AND SHALL BE SUBJECT TO SEPERATE ENGINEER'S REVIEW AND CERTIFICATION.

CONFIGURATIONS WITH POCKETS

1-PANEL DEEP CONDITIONS

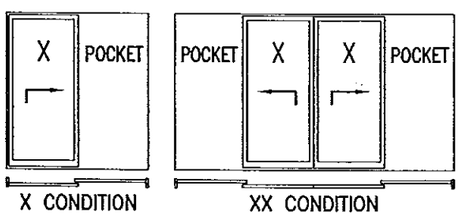

2-PANEL DEEP CONDITIONS

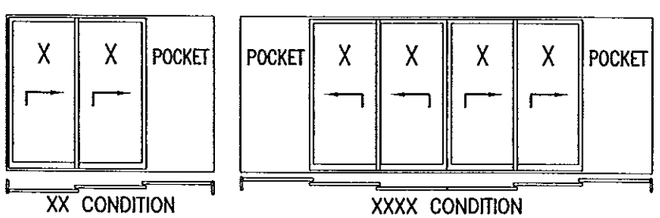

3-PANEL DEEP CONDITIONS

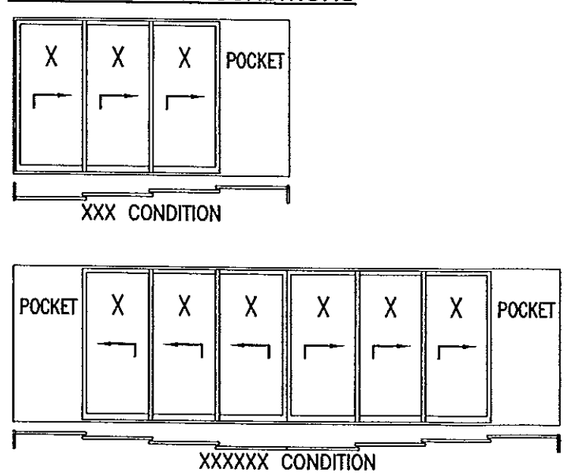

90 DEG. CONFIGURATIONS

ALL CONFIGURATIONS SHOWN ON THIS SHEET APPLY TO EITHER SIDE OF A CORNER UNIT EXCEPT THAT A POCKET IS NOT APPLICABLE AT THE 90 DEG. CORNER.

PRODUCT REVISED
In complying with the Florida Building Code
Acceptance No. 13-0711.10
Expiration Date 11/24/15

WARREN W. SCHAEFER LICENSE NO 44135 STATE OF FLORIDA PROFESSIONAL ENGINEER

DRAWN BY: W.R.M.	CHECKED BY: W.W.S.
PLOT: 1=24	DATE: 04/04/09

NO.	REVISION DESCRIPTION	BY	DATE

DRAWING TITLE
LIFT & SLIDE BRONZE CLAD SLIDING GLASS IMPACT DOORS

MANUFACTURER
PEETZ WINDOWS & DOORS
15951 S.W. 41ST STREET, SUITE 150
WESTON, FL 33331
954-659-3887

CONSULTANTS
W. W. SCHAEFER ENGINEERING & CONSULTING, P.A. (CA 6809)
7480 150TH COURT NORTH
PALM BEACH GARDENS, FL 33418
PHONE: 561-744-3424

CERTIFICATION
NOV 06 2013
WARREN W. SCHAEFER P.E.
P.E. NO. 44135

DRAWING NO. 1632 REV. B

SHEET NO. 13 OF 38

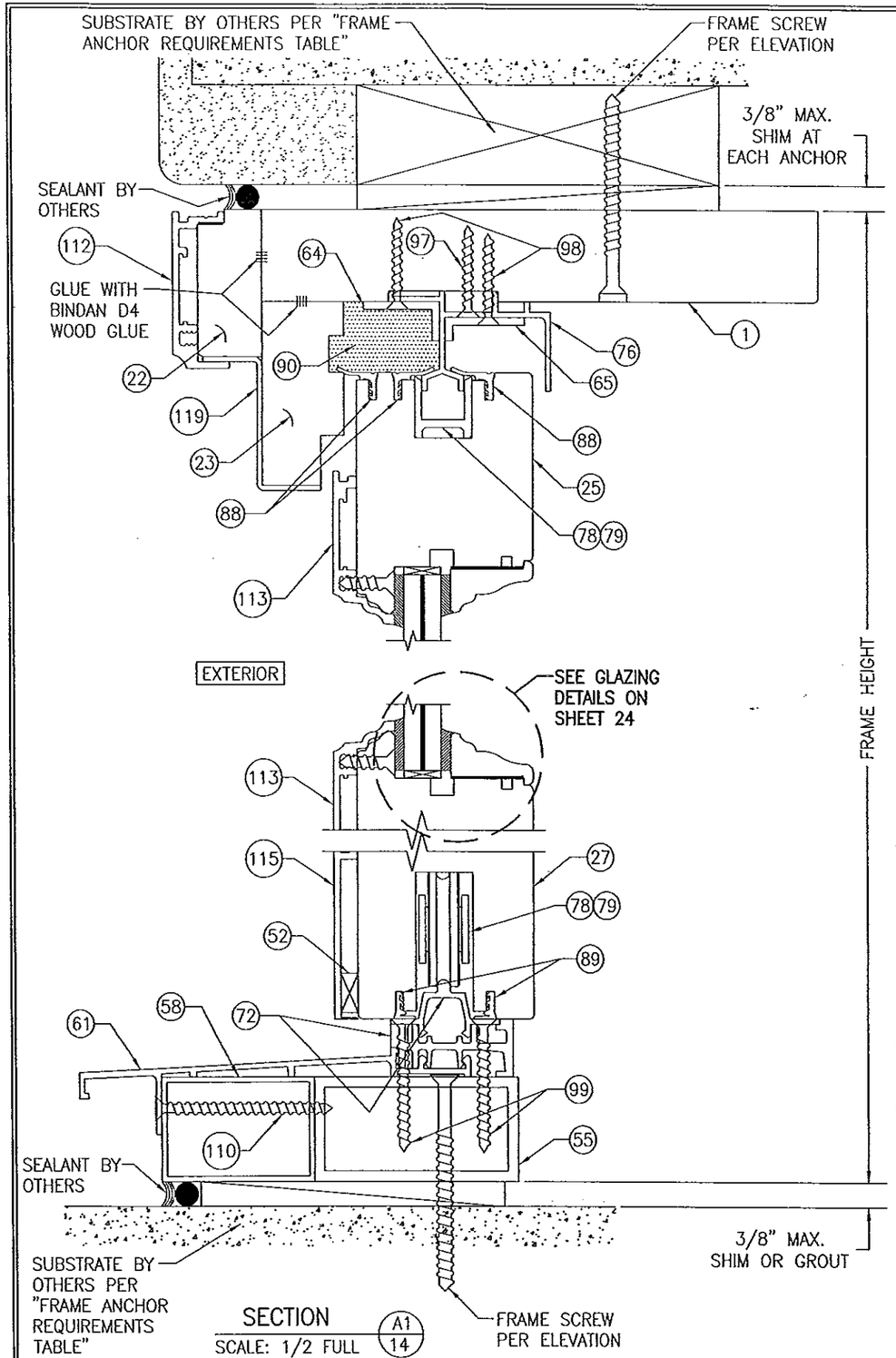

SECTION A1/14
SCALE: 1/2 FULL

(STANDARD SILL CONDITION SHOWN. FOR ALTERNATE FLUSH MOUNT SILL CONDITION, SEE "ALTERNATE FLUSH MOUNT SILL DETAILS" ON SHEETS 28–31)

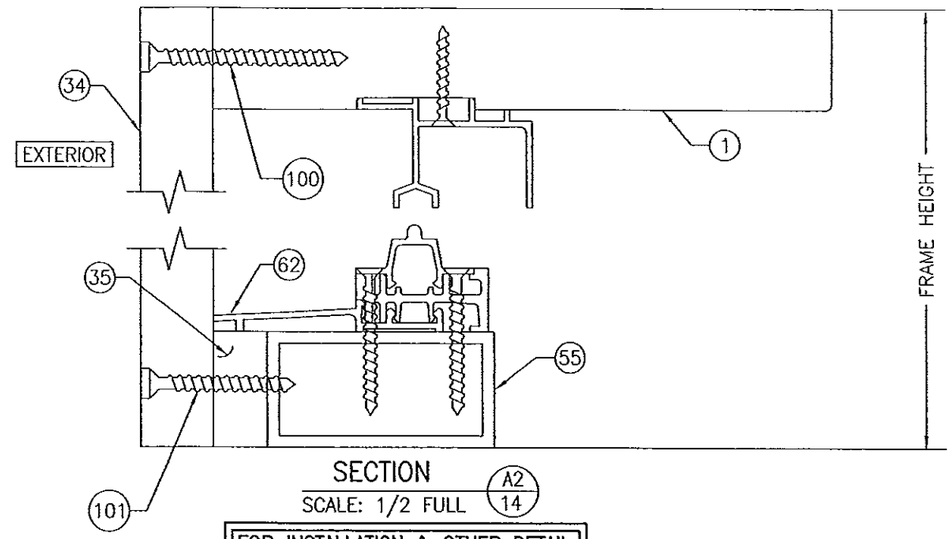

SECTION A2/14
SCALE: 1/2 FULL

FOR INSTALLATION & OTHER DETAIL NOT SHOWN, SEE SECTION A1/14

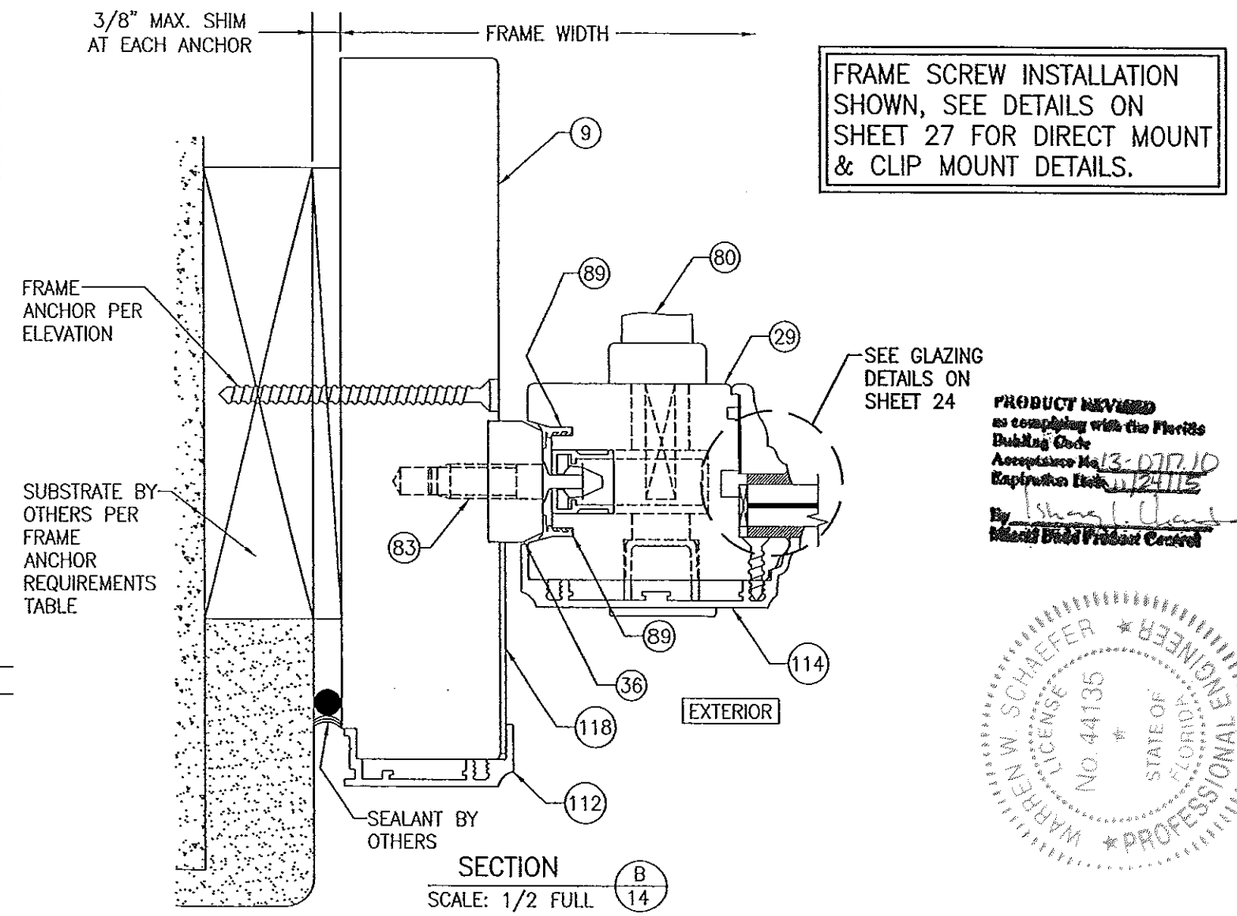

SECTION B/14
SCALE: 1/2 FULL

FRAME SCREW INSTALLATION SHOWN, SEE DETAILS ON SHEET 27 FOR DIRECT MOUNT & CLIP MOUNT DETAILS.

PRODUCT REVIEWED as complying with the Florida Building Code
Acceptance No. 13-0717.10
Expiration Date 11/24/15
By
Miami-Dade Product Control

WARREN W. SCHAEFER LICENSE No. 44135 STATE OF FLORIDA PROFESSIONAL ENGINEER

NO.	REVISION DESCRIPTION	BY	DATE

DRAWN BY: W.R.W. | CHECKED BY: W.W.S.
PLOT: 1=24 | DATE: 04/04/09

DRAWING TITLE
LIFT & SLIDE BRONZE CLAD SLIDING GLASS IMPACT DOORS

MANUFACTURER
PEETZ WINDOWS & DOORS
15951 S.W. 41ST STREET; SUITE 150
WESTON, FL 33331
954-659-3887

CONSULTANTS
W. W. SCHAEFER ENGINEERING & CONSULTING, P.A. (CA 6809)
7480 150TH COURT NORTH
PALM BEACH GARDENS, FL 33418
PHONE: 561-744-3424

CERTIFICATION
NOV 06 2013
WARREN W. SCHAEFER, P.E.
P.E. NO. 44135

DRAWING NO. 1632 | REV. B
SHEET NO. 14 OF 38

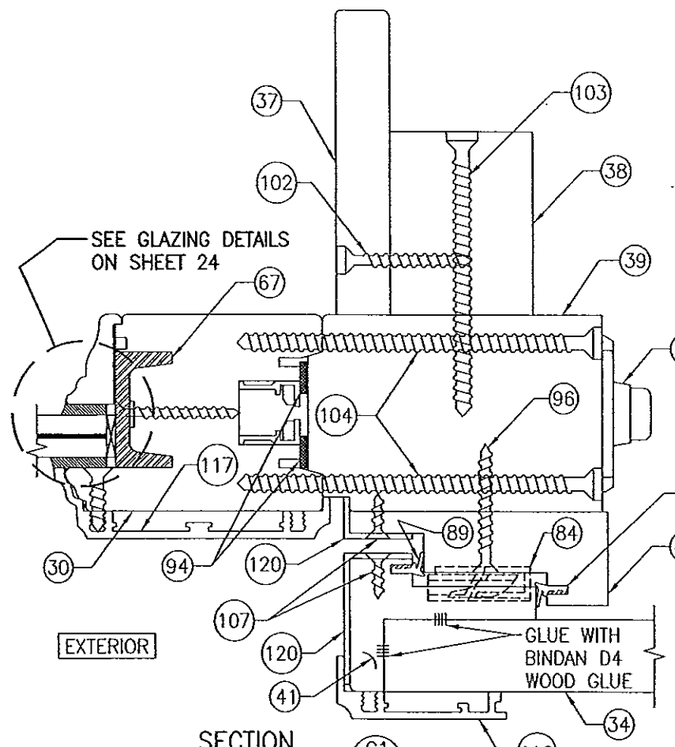

SECTION C1/15
SCALE: 1/2 FULL

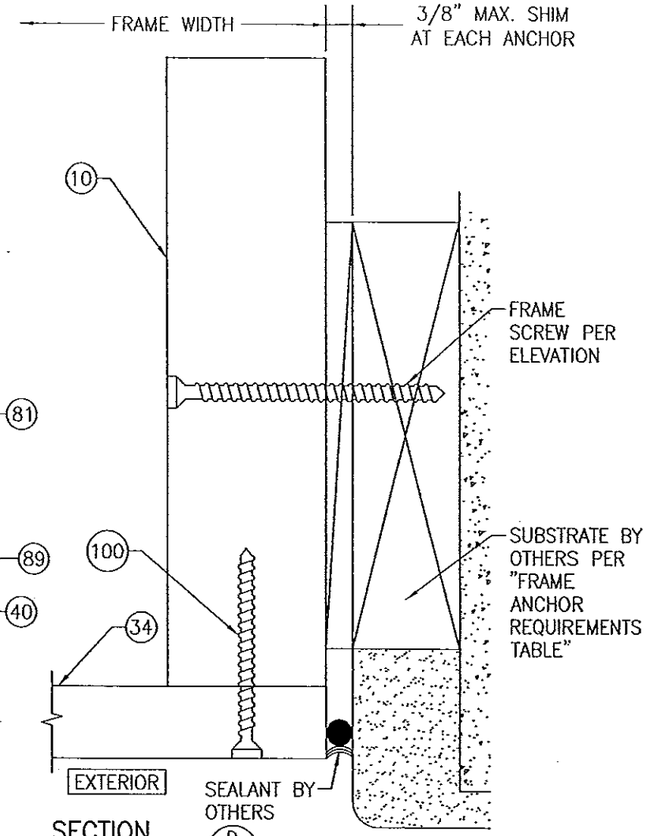

SECTION D/15
SCALE: 1/2 FULL

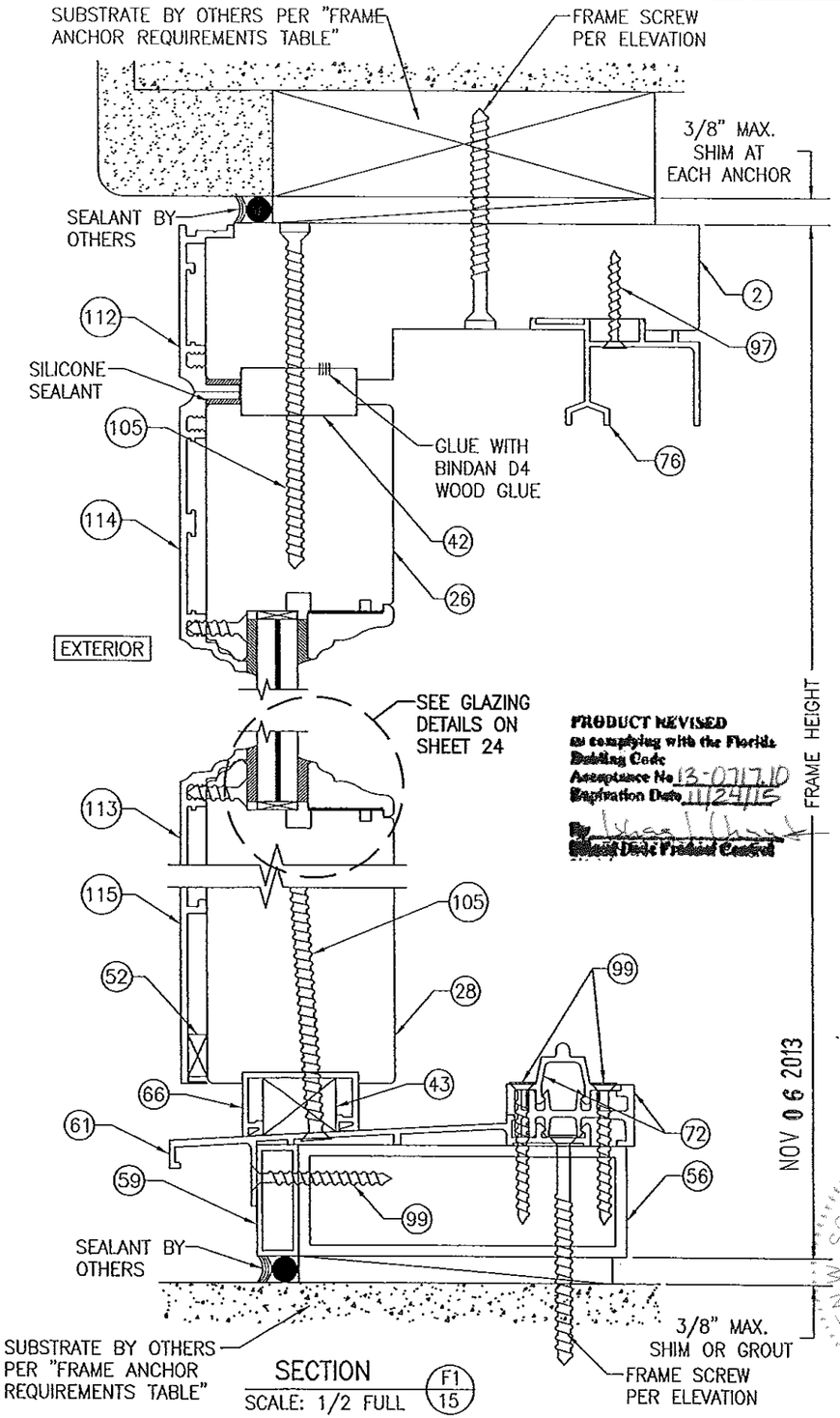

PRODUCT REVISED
in complying with the Florida Building Code
Acceptance No. 13-0717.10
Expiration Date 11/24/15
By
Miami-Dade Product Control

NOV 06 2013

SECTION F1/15
SCALE: 1/2 FULL

(STANDARD SILL CONDITION SHOWN. FOR ALTERNATE FLUSH MOUNT SILL CONDITION, SEE "ALTERNATE FLUSH MOUNT SILL DETAILS" ON SHEETS 28–31)

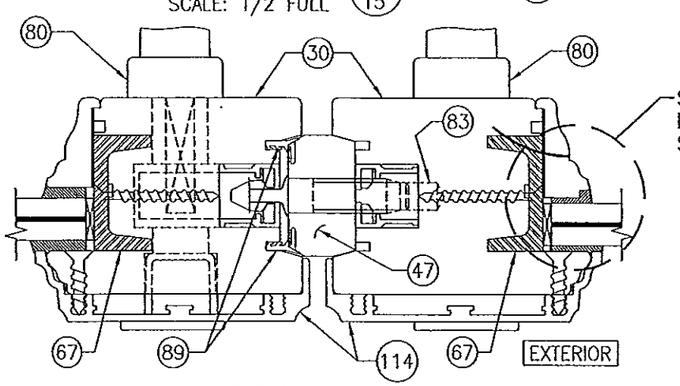

SECTION E1/15
SCALE: 1/2 FULL

(APPLICABLE WITH "XX" MEETING STILE CONDITIONS)

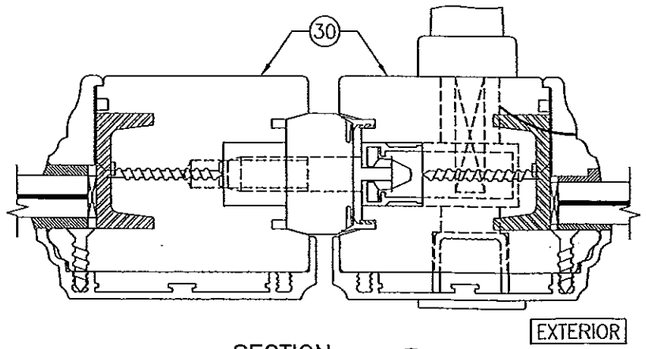

SECTION E2/15
SCALE: 1/2 FULL

(APPLICABLE WITH "OX" MEETING STILE CONDITIONS)
(FOR DETAIL NOT SHOWN, SEE SECTION E1/15)

FRAME SCREW INSTALLATION SHOWN, SEE DETAILS ON SHEET 27 FOR DIRECT MOUNT & CLIP MOUNT DETAILS.

DRAWN BY: W.R.M.	CHECKED BY: W.W.S.
PLOT: 1=24	DATE: 04/04/09

NO.	REVISION DESCRIPTION	BY	DATE

DRAWING TITLE
LIFT & SLIDE BRONZE CLAD SLIDING GLASS IMPACT DOORS

MANUFACTURER
PEETZ WINDOWS & DOORS
15951 S.W. 41ST STREET; SUITE 150
WESTON, FL 33331
954-659-3887

CONSULTANTS
W. W. SCHAEFER ENGINEERING & CONSULTING, P.A. (CA 6809)
7480 150TH COURT NORTH
PALM BEACH GARDENS, FL 33418
PHONE: 561-744-3424

CERTIFICATION
WARREN W. SCHAEFER, P.E.
P.E. NO. 44135
STATE OF FLORIDA
PROFESSIONAL ENGINEER

DRAWING NO.	REV.
1632	B

SHEET NO. 15 OF 38

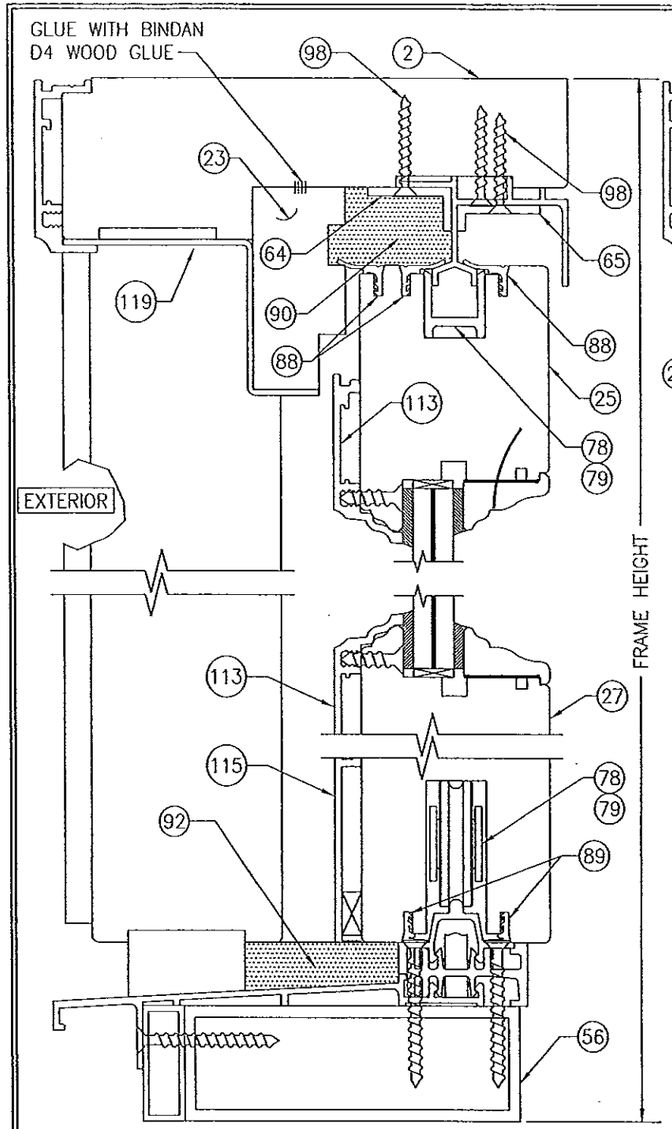

SECTION F2/16
SCALE: 1/2 FULL

FOR INSTALLATION & OTHER DETAIL NOT SHOWN, SEE SECTION F1/15

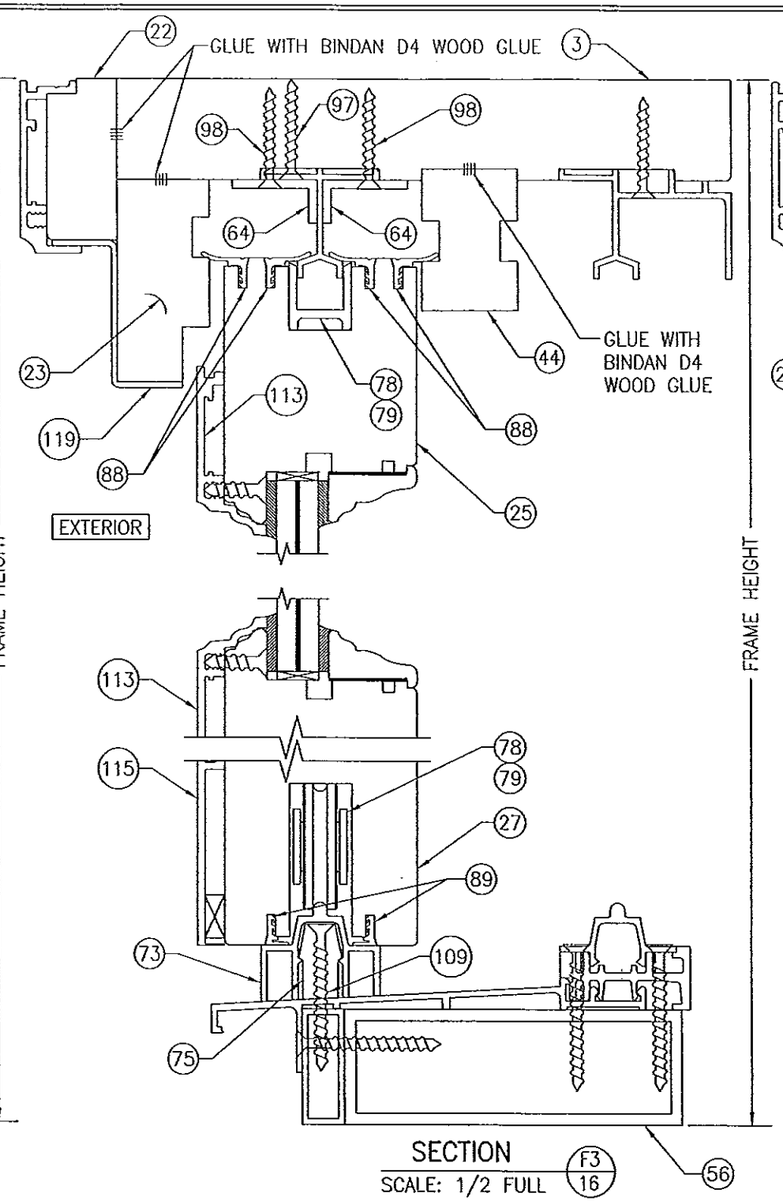

SECTION F3/16
SCALE: 1/2 FULL

FOR INSTALLATION & OTHER DETAIL NOT SHOWN, SEE SECTION F1/15

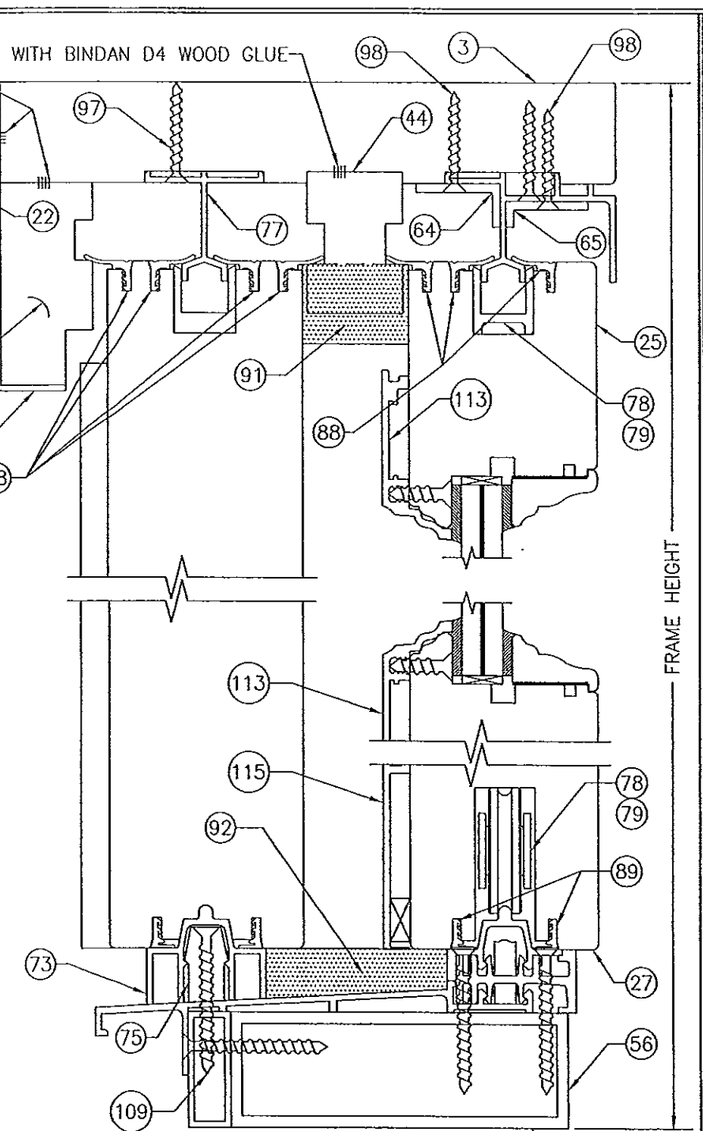

SECTION F4/16
SCALE: 1/2 FULL

FOR INSTALLATION & OTHER DETAIL NOT SHOWN, SEE SECTION F1/15

FRAME SCREW INSTALLATION SHOWN, SEE DETAILS ON SHEET 27 FOR DIRECT MOUNT & CLIP MOUNT DETAILS.

PRODUCT REVISED
as complying with the Florida Building Code
Acceptance No. 13-0717.10
Expiration Date 11/24/15
By Ishay J. Chandler
Florida Product Control

WARREN W. SCHAEFER LICENSE NO. 44135 STATE OF FLORIDA PROFESSIONAL ENGINEER

DRAWN BY: W.R.M.	CHECKED BY: W.W.S.
PLOT: 1=24	DATE: 04/04/09

NO.	REVISION DESCRIPTION	BY	DATE

DRAWING TITLE
LIFT & SLIDE BRONZE CLAD SLIDING GLASS IMPACT DOORS

MANUFACTURER
PEETZ WINDOWS & DOORS
15951 S.W. 41ST STREET; SUITE 150
WESTON, FL 33331
954-659-3887

CONSULTANTS
W. W. SCHAEFER ENGINEERING & CONSULTING, P.A. (CA 6809)
7480 150TH COURT NORTH
PALM BEACH GARDENS, FL 33418
PHONE: 561-744-3424

CERTIFICATION
NOV 06 2013
WARREN W. SCHAEFER, P.E.
P.E. NO. 44135

DRAWING NO. 1632 | REV. B

SHEET NO. 16 OF 38

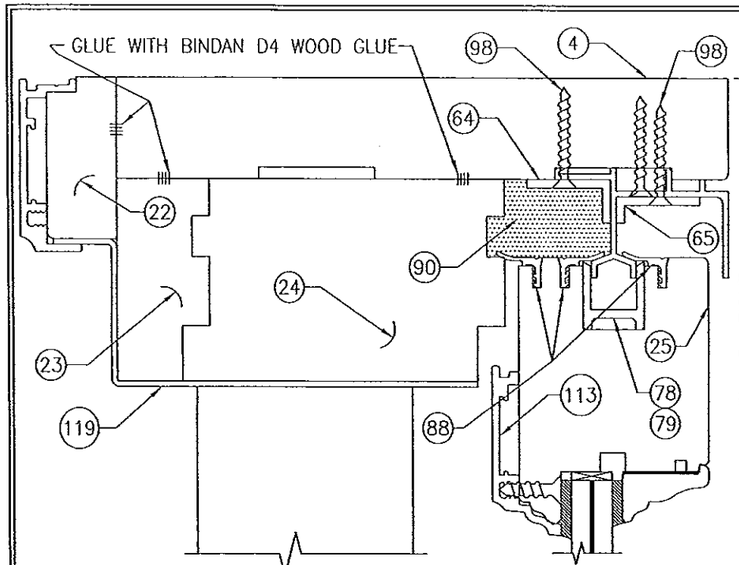

SECTION F5/17
SCALE: 1/2 FULL
(FOR SILL NOT SHOWN, SEE SECTION F4/16)

FOR INSTALLATION & OTHER DETAIL NOT SHOWN, SEE SECTION F1/15

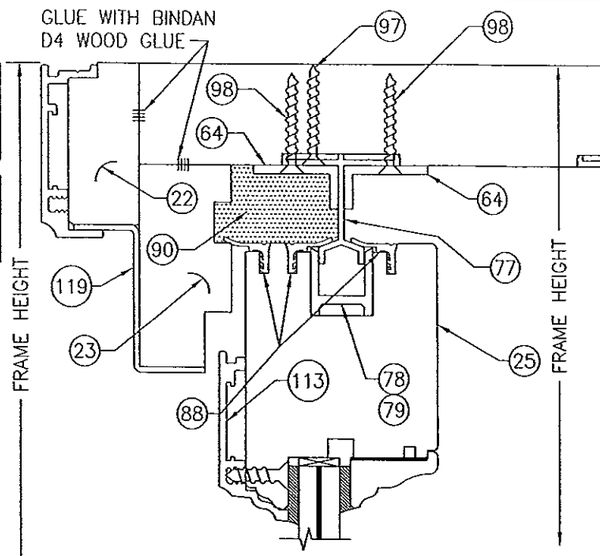

SECTION F6/17
SCALE: 1/2 FULL
(FOR SILL DETAIL NOT SHOWN, SEE SECTION F3/16)

FOR INSTALLATION & OTHER DETAIL NOT SHOWN, SEE SECTION F1/15

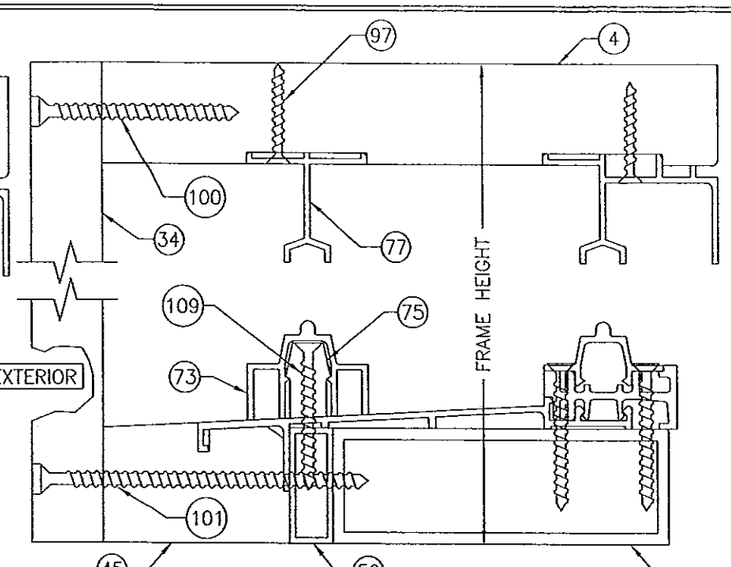

SECTION F7/17
SCALE: 1/2 FULL

FOR INSTALLATION & OTHER DETAIL NOT SHOWN, SEE SECTION F1/15

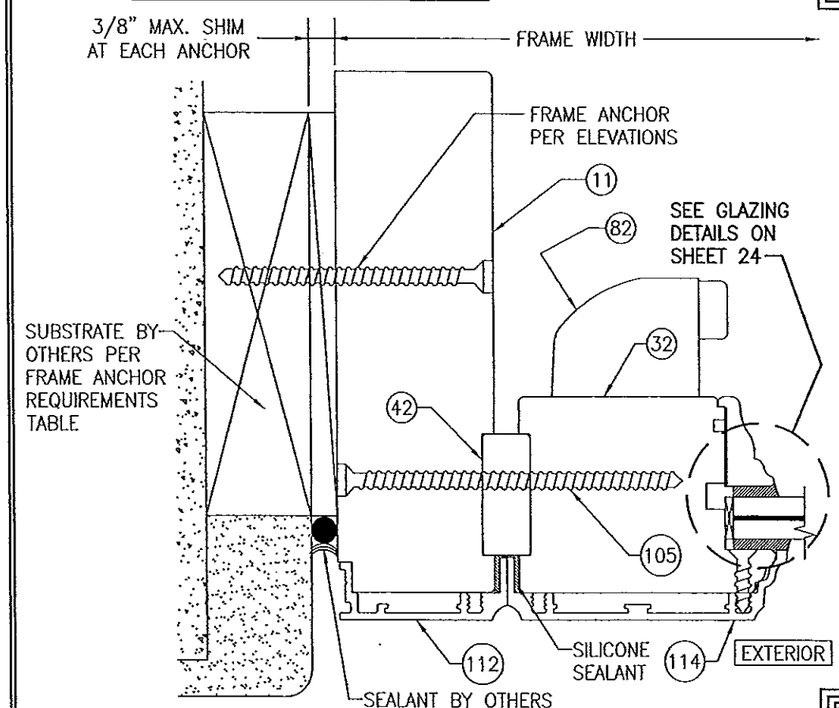

SECTION G1/17
SCALE: 1/2 FULL

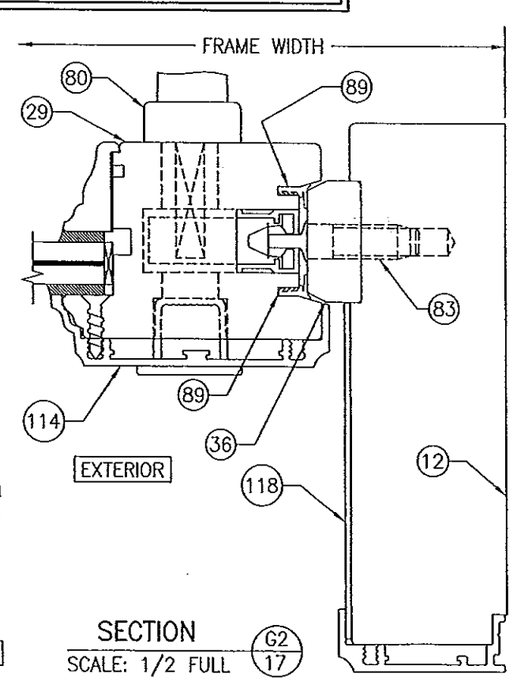

SECTION G2/17
SCALE: 1/2 FULL

FOR INSTALLATION & OTHER DETAIL NOT SHOWN, SEE SECTION G1/17

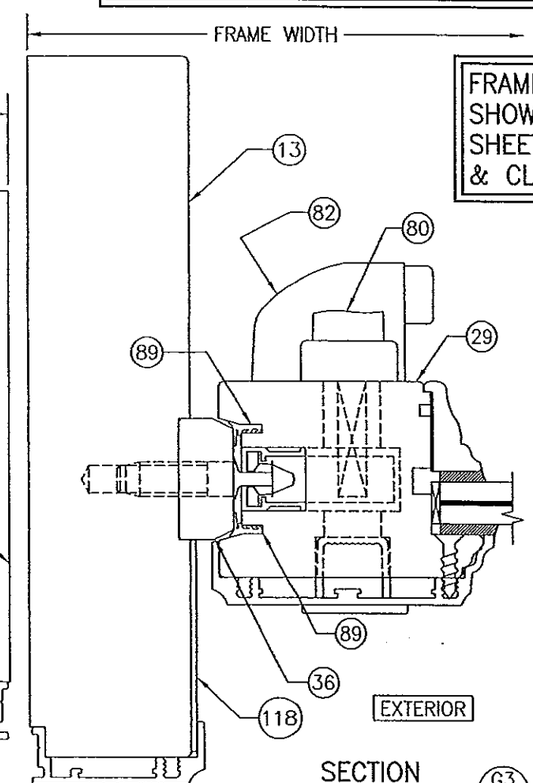

SECTION G3/17
SCALE: 1/2 FULL

FOR INSTALLATION & OTHER DETAIL NOT SHOWN, SEE SECTION G1/17

FRAME SCREW INSTALLATION SHOWN, SEE DETAILS ON SHEET 27 FOR DIRECT MOUNT & CLIP MOUNT DETAILS.

PRODUCT REVIEWED as complying with the Florida Building Code Acceptance No. 13-0717.10 Expiration Date 11-24-15 By [illegible] Miami-Dade Product Control

WARREN W. SCHAEFER LICENSE NO. 44135 STATE OF FLORIDA PROFESSIONAL ENGINEER

NO.	REVISION DESCRIPTION	BY	DATE

DRAWN BY: W.R.M. | CHECKED BY: W.W.S.
PLOT: 1=24 | DATE: 04/04/09

DRAWING TITLE: LIFT & SLIDE BRONZE CLAD SLIDING GLASS IMPACT DOORS

MANUFACTURER: PEETZ WINDOWS & DOORS, 15951 S.W. 41ST STREET; SUITE 150, WESTON, FL 33331, 954-659-3887

CONSULTANTS: W. W. SCHAEFER ENGINEERING & CONSULTING, P.A. (CA 6809), 7480 150TH COURT NORTH, PALM BEACH GARDENS, FL 33418, PHONE: 561-744-3424

CERTIFICATION: NOV 06 2013 — WARREN W. SCHAEFER, P.E. P.E. NO. 44135

DRAWING NO. 1632 | REV. B

SHEET NO. 17 OF 38

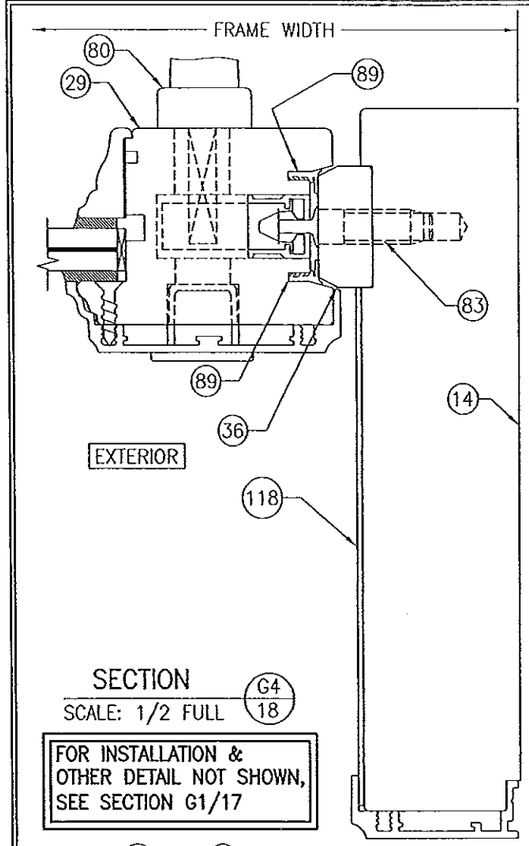

SECTION G4/18
SCALE: 1/2 FULL

FOR INSTALLATION & OTHER DETAIL NOT SHOWN, SEE SECTION G1/17

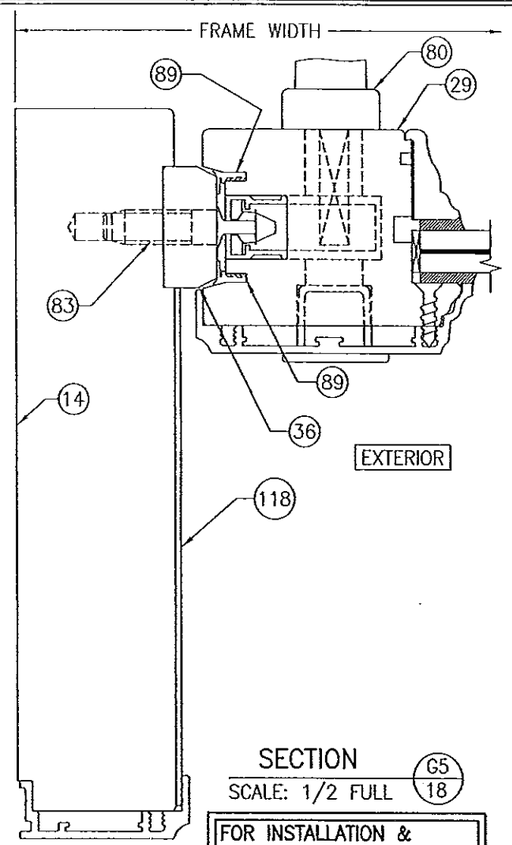

SECTION G5/18
SCALE: 1/2 FULL

FOR INSTALLATION & OTHER DETAIL NOT SHOWN, SEE SECTION G1/17

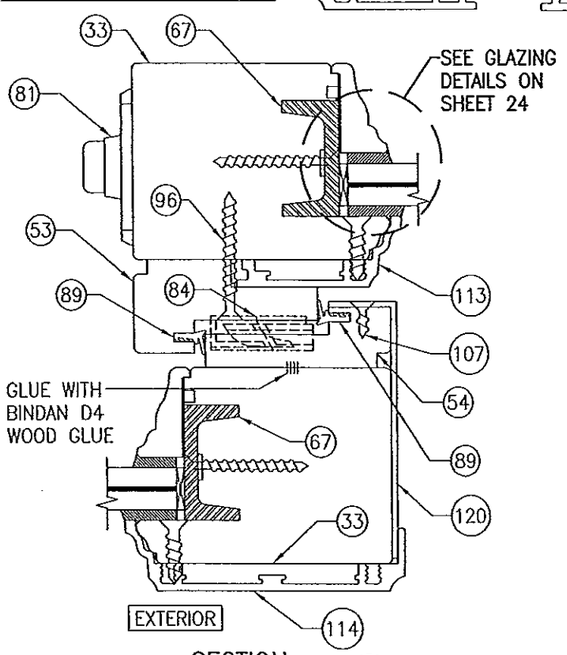

SECTION H1/18
SCALE: 1/2 FULL

FRAME SCREW INSTALLATION SHOWN, SEE DETAILS ON SHEET 27 FOR DIRECT MOUNT & CLIP MOUNT DETAILS.

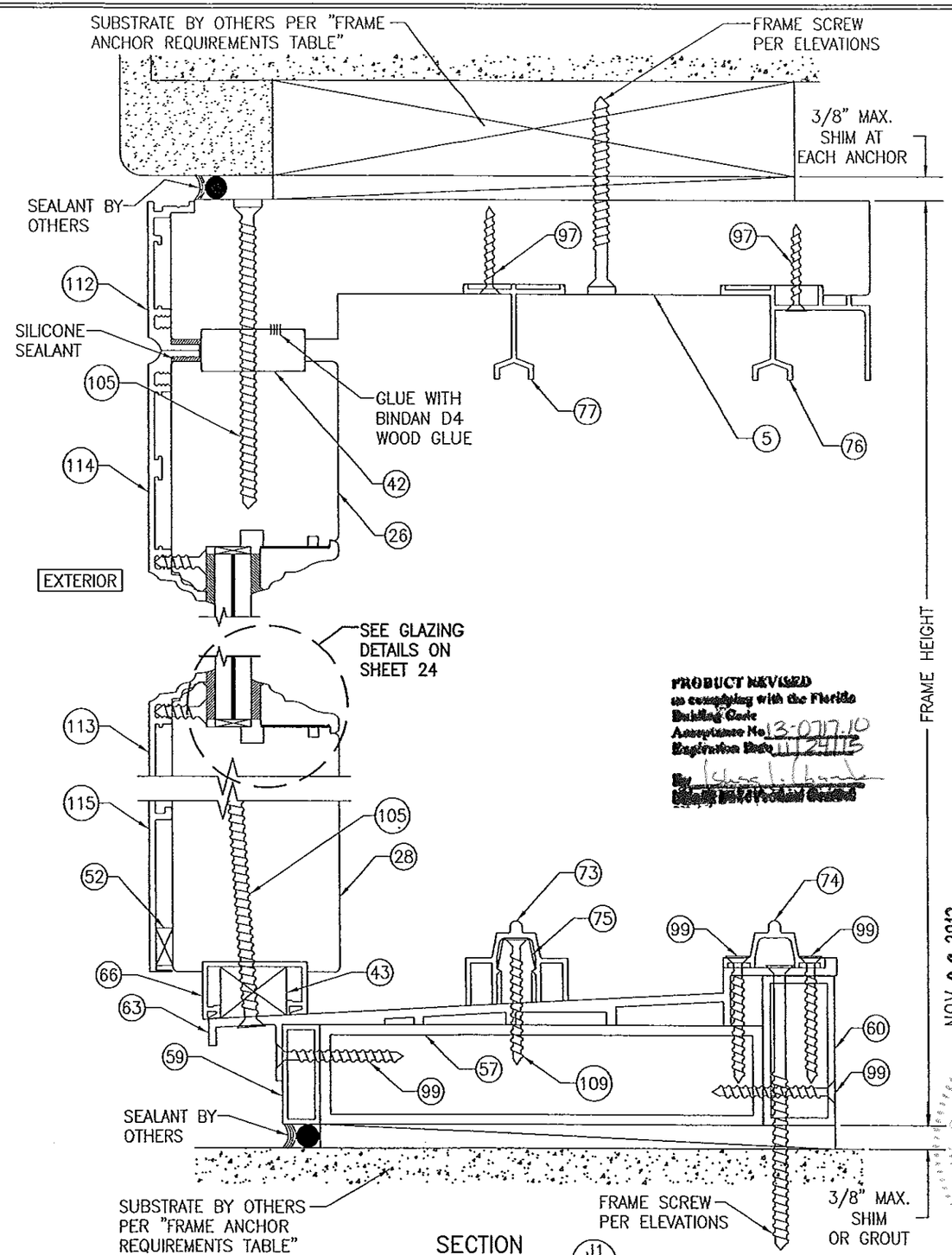

PRODUCT REVIEWED as complying with the Florida Building Code
Acceptance No. 13-0717.10
Expiration Date 11/24/15
By

SECTION J1/18
SCALE: 1/2 FULL

(STANDARD SILL CONDITION SHOWN. FOR ALTERNATE FLUSH MOUNT SILL CONDITION, SEE "ALTERNATE FLUSH MOUNT SILL DETAILS" ON SHEETS 28–31)

NOV 06 2013

DRAWN BY: W.R.M.	CHECKED BY: W.W.S.
PLOT: 1=24	DATE: 04/04/09

NO.	REVISION DESCRIPTION	BY	DATE

DRAWING TITLE
LIFT & SLIDE BRONZE CLAD SLIDING GLASS IMPACT DOORS

MANUFACTURER
PEETZ WINDOWS & DOORS
15951 S.W. 41ST STREET, SUITE 150
WESTON, FL 33331
954-659-3887

CONSULTANTS
W. W. SCHAEFER ENGINEERING & CONSULTING, P.A. (CA 6809)
7480 150TH COURT NORTH
PALM BEACH GARDENS, FL 33418
PHONE: 561-744-3424

CERTIFICATION
WARREN W. SCHAEFER, P.E.
P.E. NO. 44135
STATE OF FLORIDA
PROFESSIONAL ENGINEER

DRAWING NO.	REV.
1632	B

SHEET NO.
18 OF 38

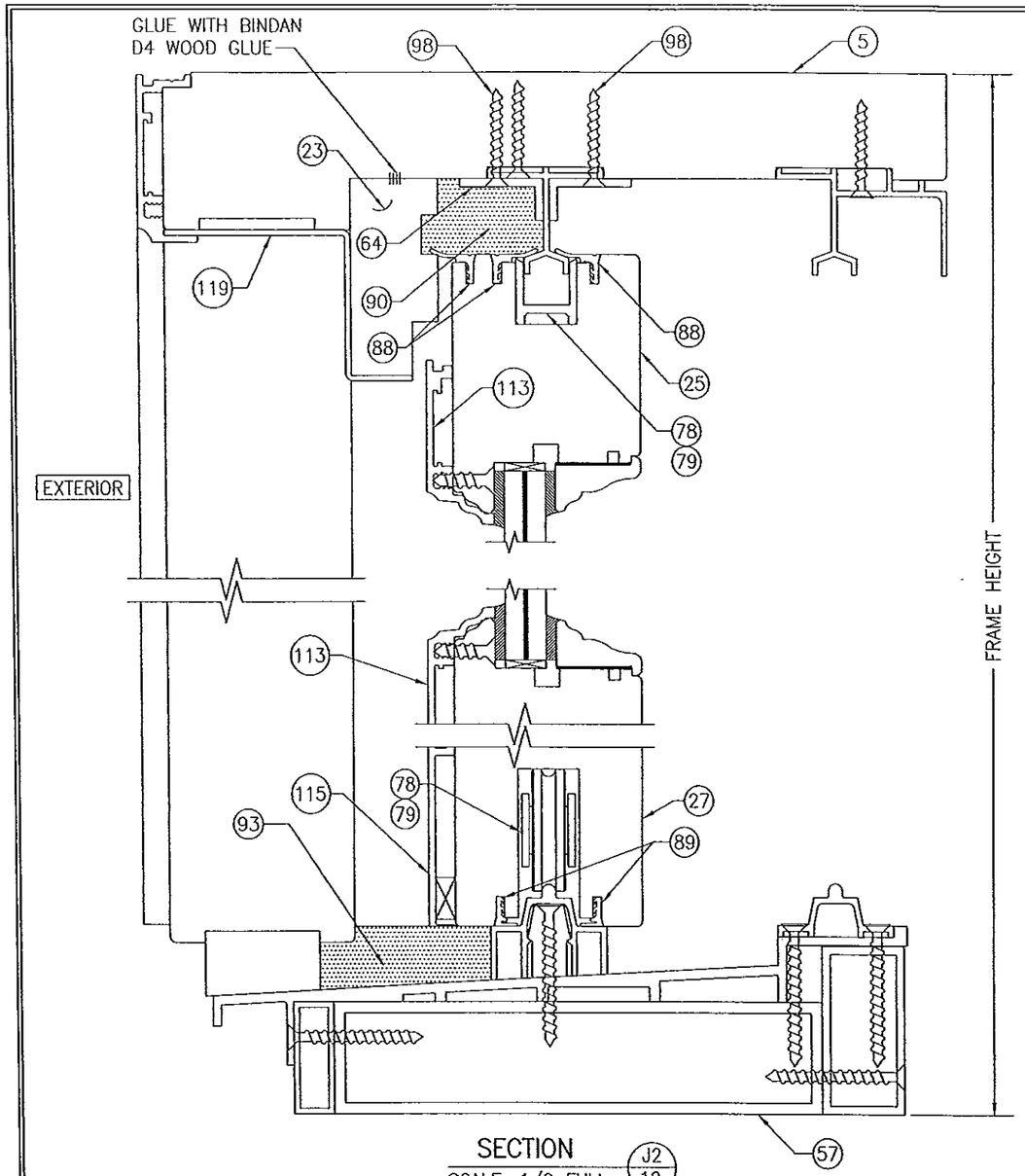

SECTION J2/19
SCALE: 1/2 FULL

FOR INSTALLATION & OTHER DETAIL NOT SHOWN, SEE SECTION J1/18

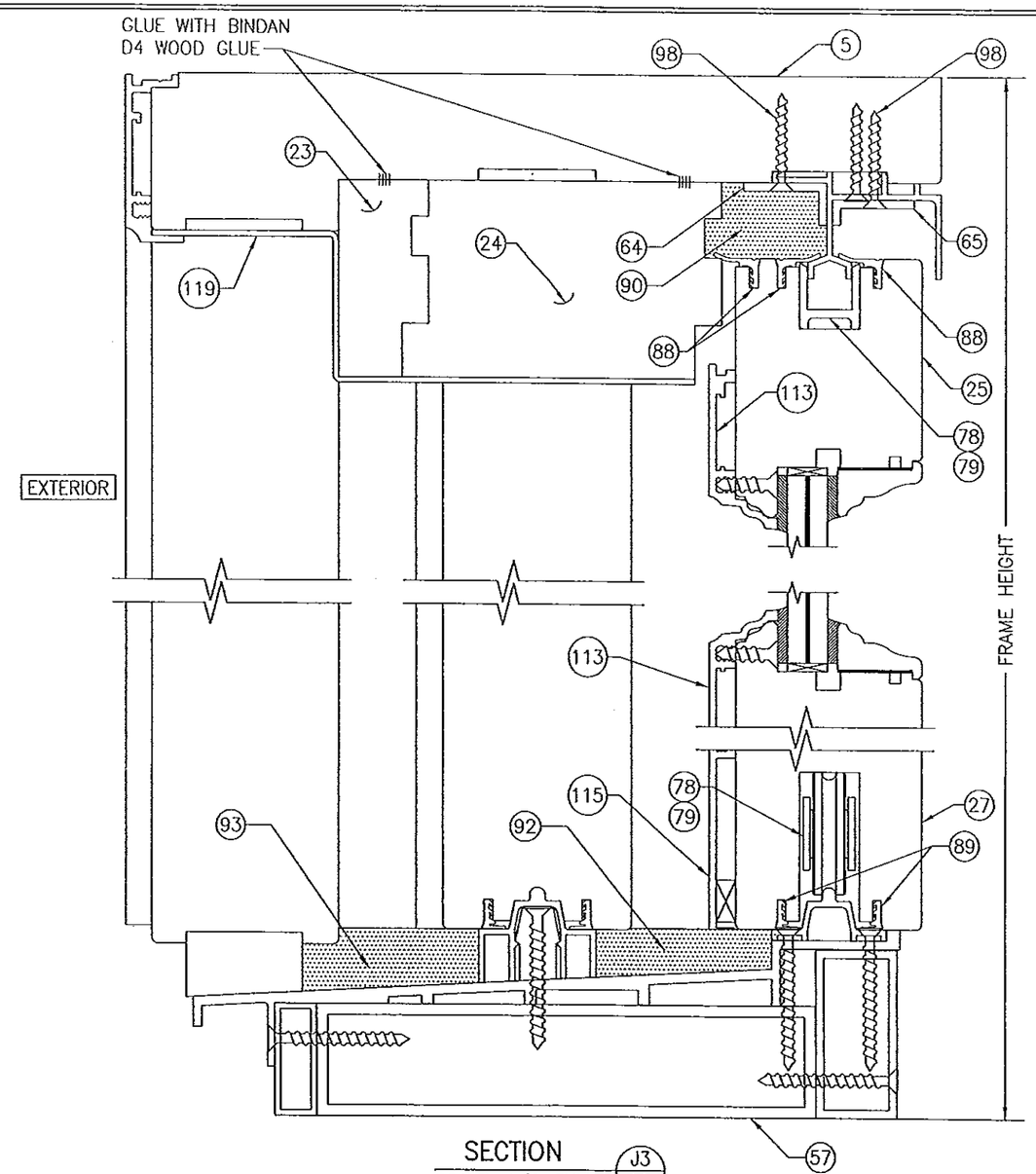

SECTION J3/19
SCALE: 1/2 FULL

FOR INSTALLATION & OTHER DETAIL NOT SHOWN, SEE SECTION J1/18

PRODUCT REVISED
as complying with the Florida
Building Code
Acceptance No. 13-0717.10
Expiration Date 11/24/15
By [signature]
Broad Block Product Control

WARREN W. SCHAEFER
LICENSE
No 44135
STATE OF FLORIDA
PROFESSIONAL ENGINEER

DRAWN BY: W.R.M.	CHECKED BY: W.W.S.
PLOT: 1=24	DATE: 04/04/09

NO.	REVISION DESCRIPTION	BY	DATE

DRAWING TITLE
LIFT & SLIDE BRONZE CLAD SLIDING GLASS IMPACT DOORS

MANUFACTURER
PEETZ WINDOWS & DOORS
15951 S.W. 41ST STREET; SUITE 150
WESTON, FL 33331
954-659-3887

CONSULTANTS
W. W. SCHAEFER ENGINEERING & CONSULTING, P.A. (CA 6809)
7480 150TH COURT NORTH
PALM BEACH GARDENS, FL 33418
PHONE: 561-744-3424

CERTIFICATION
NOV 06 2013
WARREN W. SCHAEFER, P.E.
P.E. NO. 44135

DRAWING NO. 1632
REV. B
SHEET NO. 19 OF 38

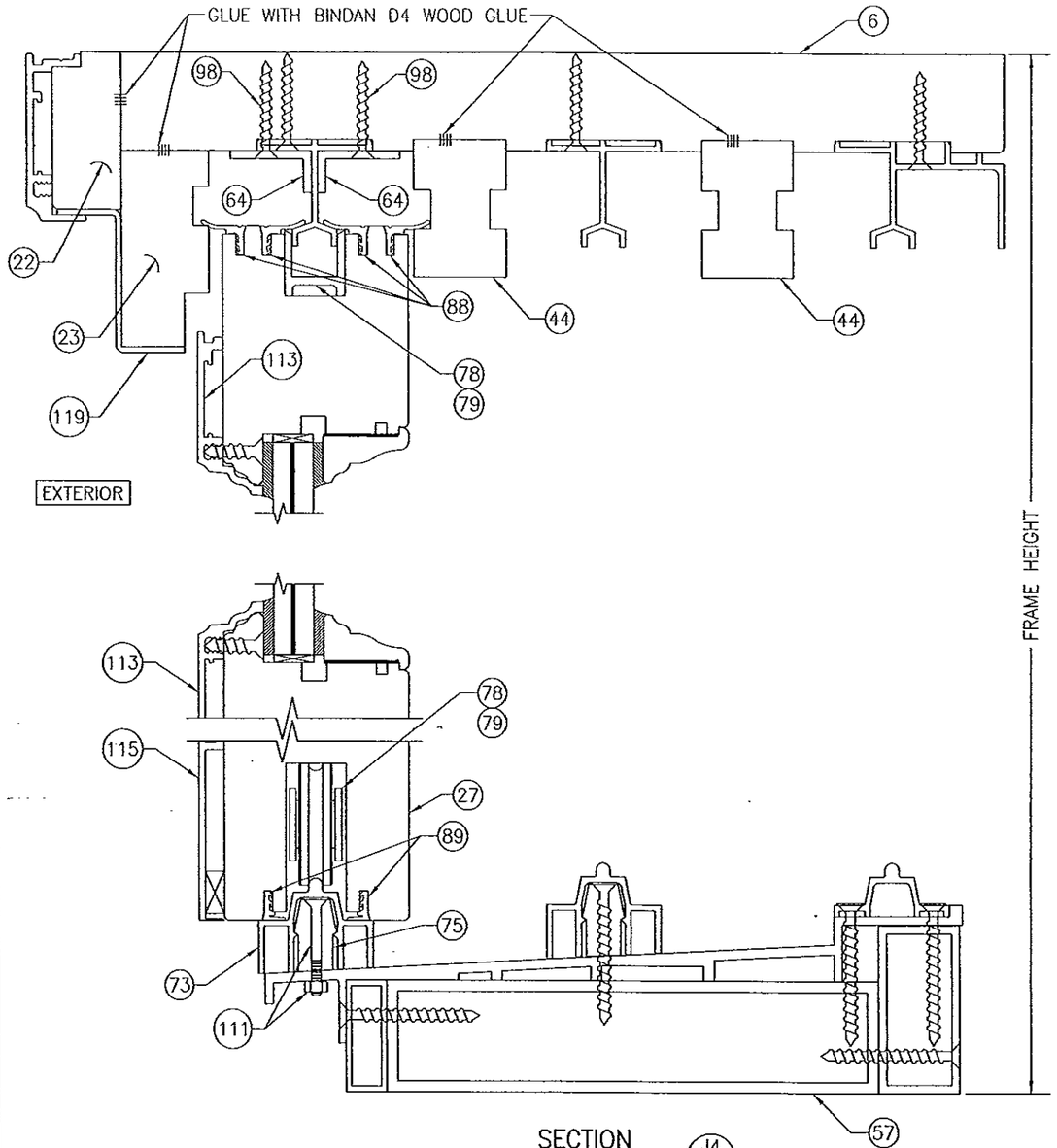

SECTION J4/20
SCALE: 1/2 FULL

FOR INSTALLATION & OTHER DETAIL NOT SHOWN, SEE SECTION J1/18

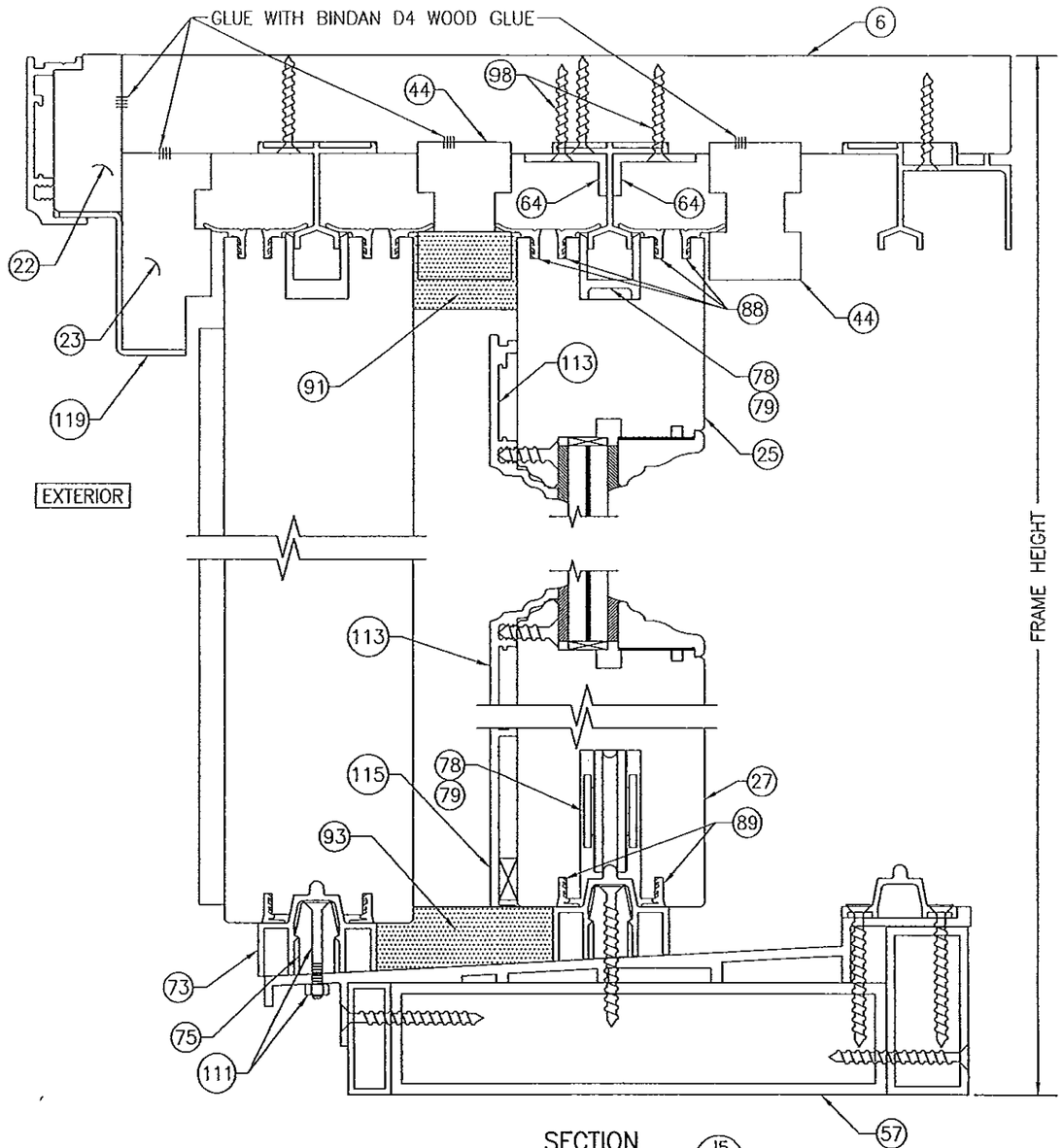

SECTION J5/20
SCALE: 1/2 FULL

FOR INSTALLATION & OTHER DETAIL NOT SHOWN, SEE SECTION J1/18

PRODUCT REVIEWED
as complying with the Florida
Building Code
Acceptance No. 13-0717.10
Expiration Date 11/24/15
By
Miami-Dade Product Control

WARREN W. SCHAEFER * LICENSE No. 44135 * STATE OF FLORIDA * PROFESSIONAL ENGINEER

DRAWN BY: W.R.W.	CHECKED BY: W.W.S.
PLOT: 1=24	DATE: 04/04/09

NO.	REVISION DESCRIPTION	BY	DATE

DRAWING TITLE
LIFT & SLIDE BRONZE CLAD SLIDING GLASS IMPACT DOORS

MANUFACTURER
PEETZ WINDOWS & DOORS
15951 S.W. 41ST STREET, SUITE 150
WESTON, FL 33331
954-659-3887

CONSULTANTS
W. W. SCHAEFER ENGINEERING & CONSULTING, P.A. (CA 6809)
7480 150TH COURT NORTH
PALM BEACH GARDENS, FL 33418
PHONE: 561-744-3424

CERTIFICATION
NOV 06 2013
WARREN W. SCHAEFER, P.E.
P.E. NO. 44135

DRAWING NO. 1632
REV. B
SHEET NO. 20 OF 38

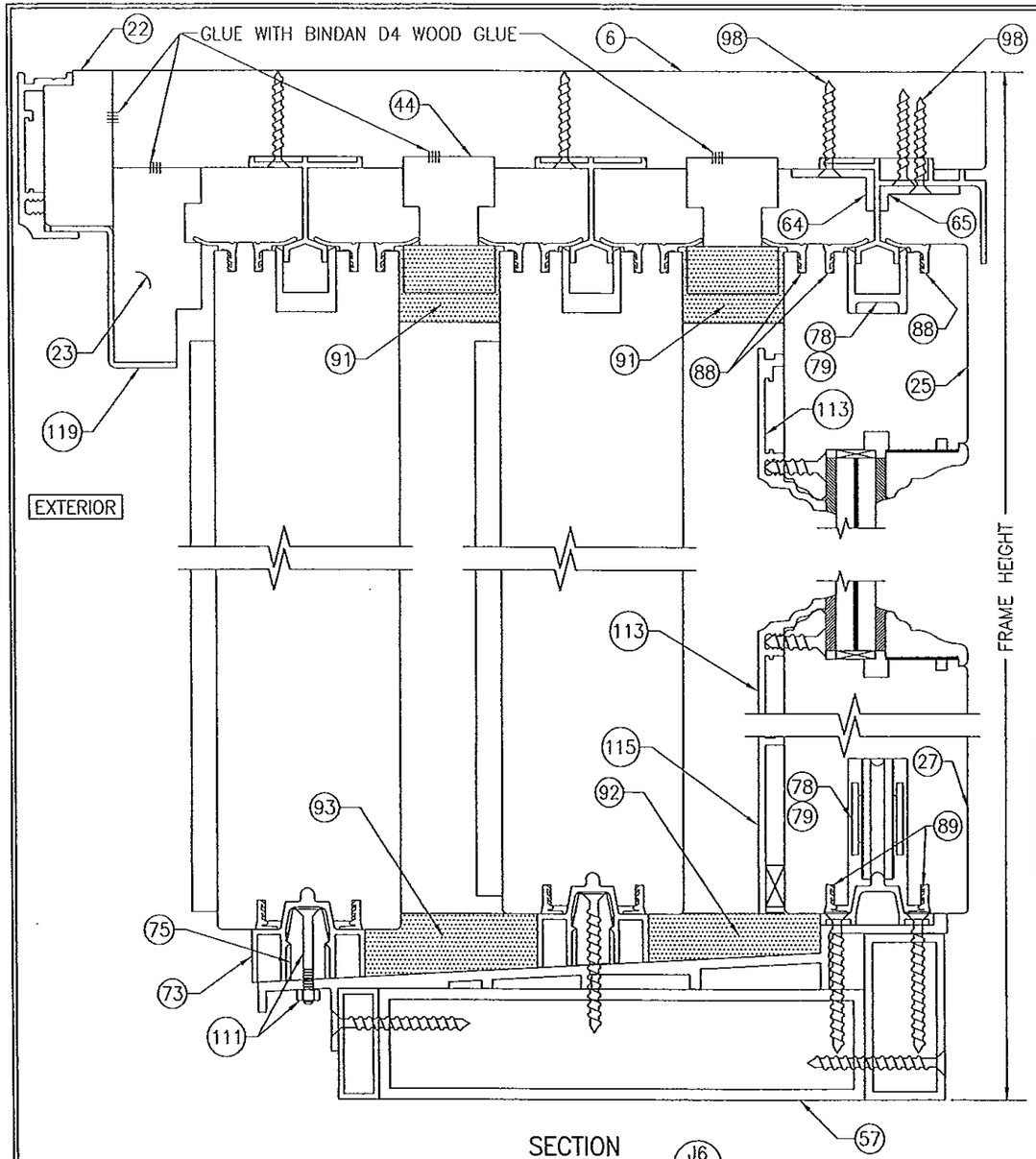

SECTION J6/21
SCALE: 1/2 FULL

FOR INSTALLATION & OTHER DETAIL NOT SHOWN, SEE SECTION J1/18

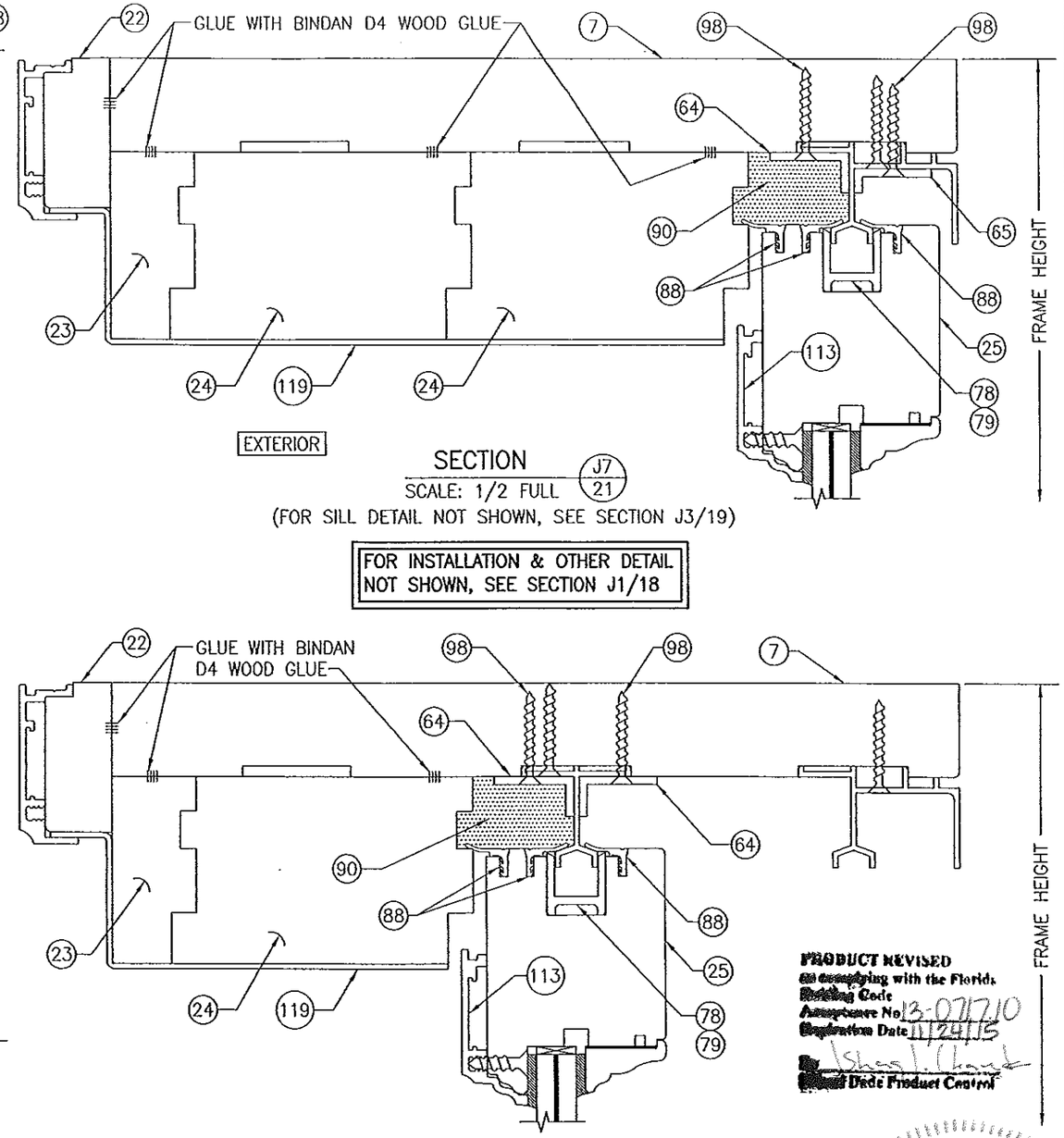

SECTION J7/21
SCALE: 1/2 FULL
(FOR SILL DETAIL NOT SHOWN, SEE SECTION J3/19)

FOR INSTALLATION & OTHER DETAIL NOT SHOWN, SEE SECTION J1/18

SECTION J8/21
SCALE: 1/2 FULL
(FOR SILL DETAIL NOT SHOWN, SEE SECTION J2/19)

FOR INSTALLATION & OTHER DETAIL NOT SHOWN, SEE SECTION J1/18

PRODUCT REVISED
as complying with the Florida Building Code
Acceptance No. 13-0717.10
Expiration Date 11/24/15
By Dade Product Control

WARREN W. SCHAEFER LICENSE No. 44135 STATE OF FLORIDA PROFESSIONAL ENGINEER

DRAWN BY: W.R.U.	CHECKED BY: W.W.S.
PLOT: 1=24	DATE: 04/04/09

NO.	REVISION DESCRIPTION	BY	DATE

DRAWING TITLE
LIFT & SLIDE BRONZE CLAD SLIDING GLASS IMPACT DOORS

MANUFACTURER
PEETZ WINDOWS & DOORS
15951 S.W. 41ST STREET, SUITE 150
WESTON, FL 33331
954-659-3887

CONSULTANTS
W. W. SCHAEFER ENGINEERING & CONSULTING, P.A. (CA 6809)
7480 150TH COURT NORTH
PALM BEACH GARDENS, FL 33418
PHONE: 561-744-3424

CERTIFICATION
NOV 06 2013
WARREN W. SCHAEFER, P.E.
P.E. NO. 44135

DRAWING NO. 1632
REV. B
SHEET NO. 21 OF 38

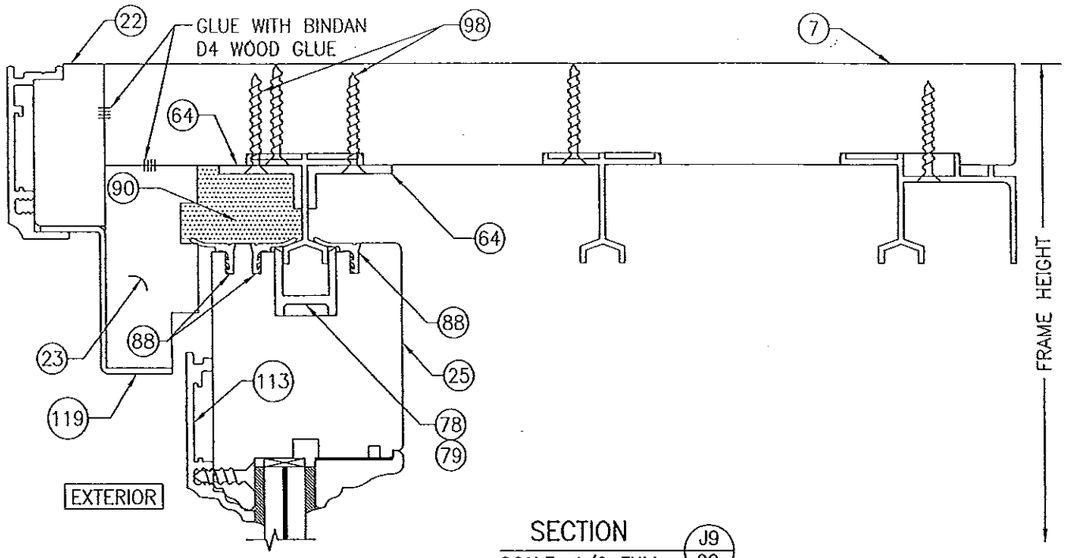

SECTION J9/22
SCALE: 1/2 FULL
(FOR SILL DETAIL NOT SHOWN, SEE SECTION J4/20)

FOR INSTALLATION & OTHER DETAIL NOT SHOWN, SEE SECTION J1/18

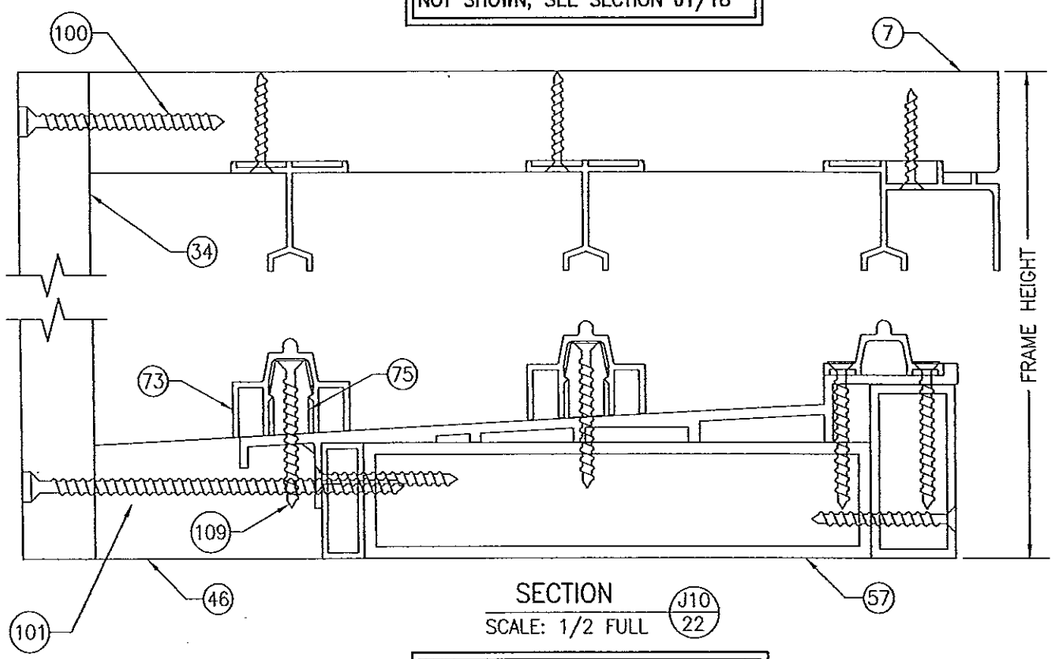

SECTION J10/22
SCALE: 1/2 FULL

FOR INSTALLATION & OTHER DETAIL NOT SHOWN, SEE SECTION J1/18

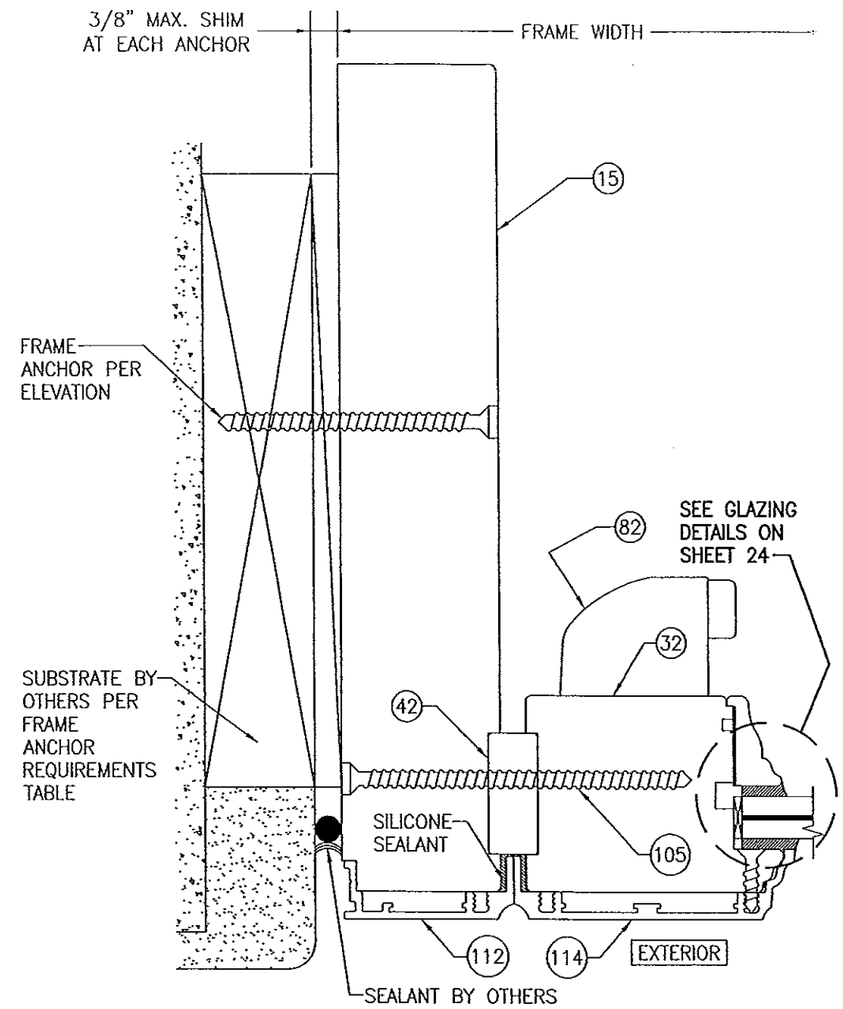

SECTION K1/22
SCALE: 1/2 FULL

FRAME SCREW INSTALLATION SHOWN, SEE DETAILS ON SHEET 27 FOR DIRECT MOUNT & CLIP MOUNT DETAILS.

PRODUCT REVIEWED
as complying with the Florida
Building Code
Acceptance No. 13-0717.10
Expiration Date 11/24/15
By
Miami Dade Product Control

WARREN W. SCHAEFER LICENSE No 44135 STATE OF FLORIDA PROFESSIONAL ENGINEER

NO.	REVISION DESCRIPTION	BY	DATE

DRAWN BY: W.R.H. | CHECKED BY: W.W.S.
PLOT: 1=24 | DATE: 04/04/09

DRAWING TITLE
LIFT & SLIDE BRONZE CLAD SLIDING GLASS IMPACT DOORS

MANUFACTURER
PEETZ WINDOWS & DOORS
15951 S.W. 41ST STREET, SUITE 150
WESTON, FL 33331
954-659-3887

CONSULTANTS
W. W. SCHAEFER ENGINEERING & CONSULTING, P.A. (CA 6809)
7480 150TH COURT NORTH
PALM BEACH GARDENS, FL 33418
PHONE: 561-744-3424

CERTIFICATION
NOV 06 2013
WARREN W. SCHAEFER, P.E.
P.E. NO. 44135

DRAWING NO. 1632 | REV. B
SHEET NO. 22 OF 38

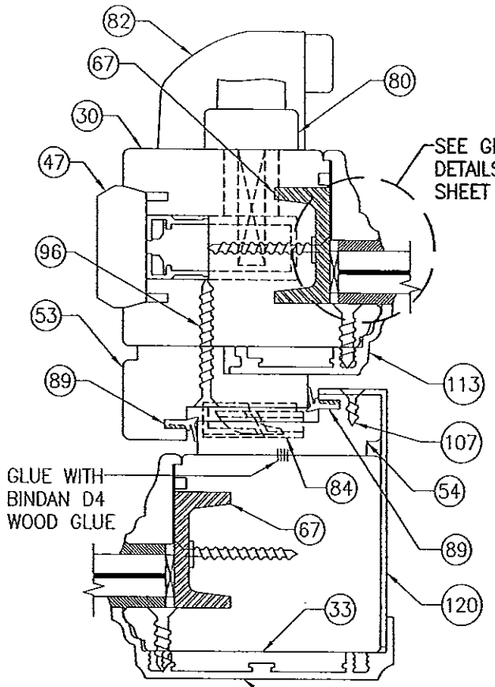

SECTION H2/23
SCALE: 1/2 FULL

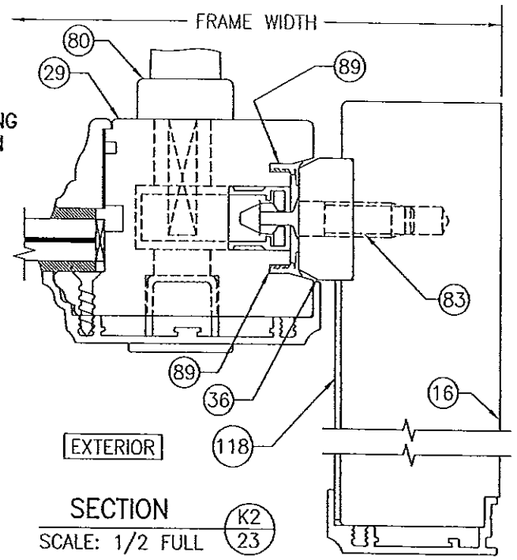

SECTION K2/23
SCALE: 1/2 FULL

FOR INSTALLATION & OTHER DETAIL NOT SHOWN, SEE SECTION K1/22

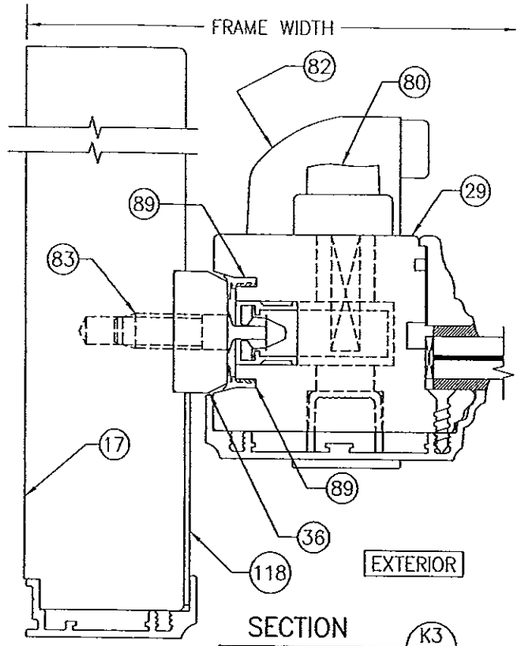

SECTION K3/23
SCALE: 1/2 FULL

FOR INSTALLATION & OTHER DETAIL NOT SHOWN, SEE SECTION K1/22

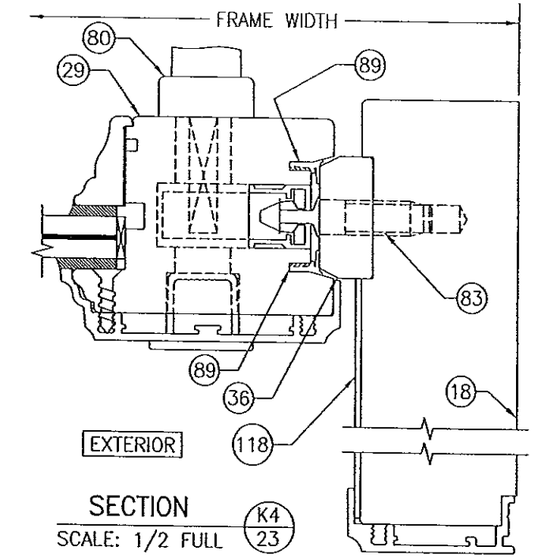

SECTION K4/23
SCALE: 1/2 FULL

FOR INSTALLATION & OTHER DETAIL NOT SHOWN, SEE SECTION K/22

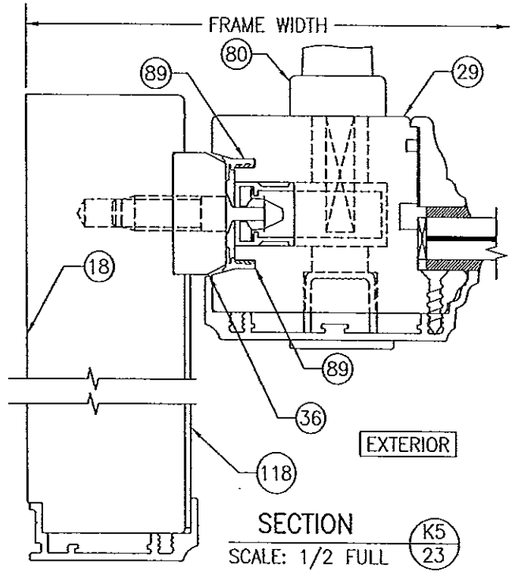

SECTION K5/23
SCALE: 1/2 FULL

FOR INSTALLATION & OTHER DETAIL NOT SHOWN, SEE SECTION K/22

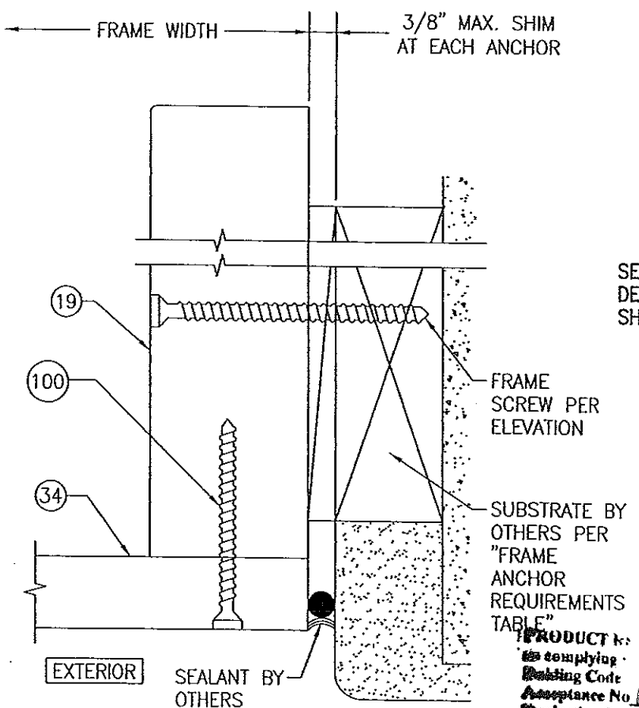

SECTION K6/23
SCALE: 1/2 FULL

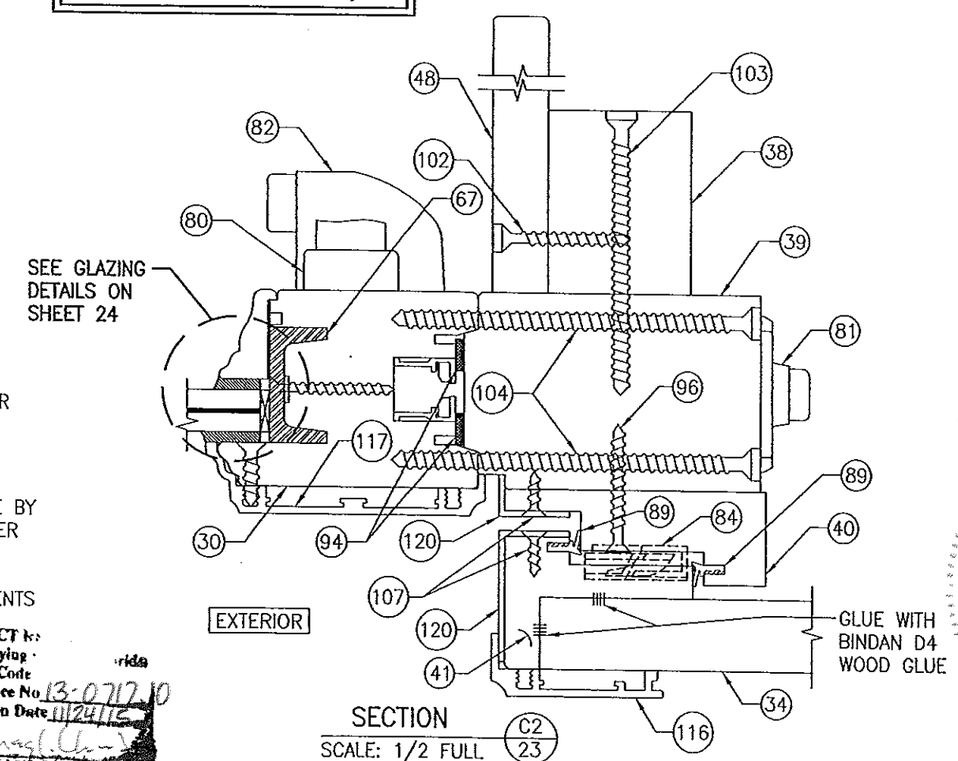

SECTION C2/23
SCALE: 1/2 FULL

PRODUCT ... complying ... Building Code ... Acceptance No. 13-0717.10 Expiration Date 11/24/15 Date Product Ap...

NOV 06 2013

DRAWN BY: W.R.M.	CHECKED BY: W.W.S
PLOT: 1=24	DATE: 01/04/09

NO.	REVISION DESCRIPTION	BY	DATE

DRAWING TITLE
LIFT & SLIDE BRONZE CLAD SLIDING GLASS IMPACT DOORS

MANUFACTURER
PEETZ WINDOWS & DOORS
15951 S.W. 41ST STREET, SUITE 150
WESTON, FL 33331
954-659-3887

CONSULTANTS
W. W. SCHAEFER ENGINEERING & CONSULTING, P.A. (CA 6809)
7480 150TH COURT NORTH
PALM BEACH GARDENS, FL 33418
PHONE: 561-744-3424

CERTIFICATION
WARREN W. SCHAEFER, P.E.
P.E. NO. 44136
STATE OF FLORIDA

DRAWING NO. 1632
REV. B
SHEET NO. 23 OF 38

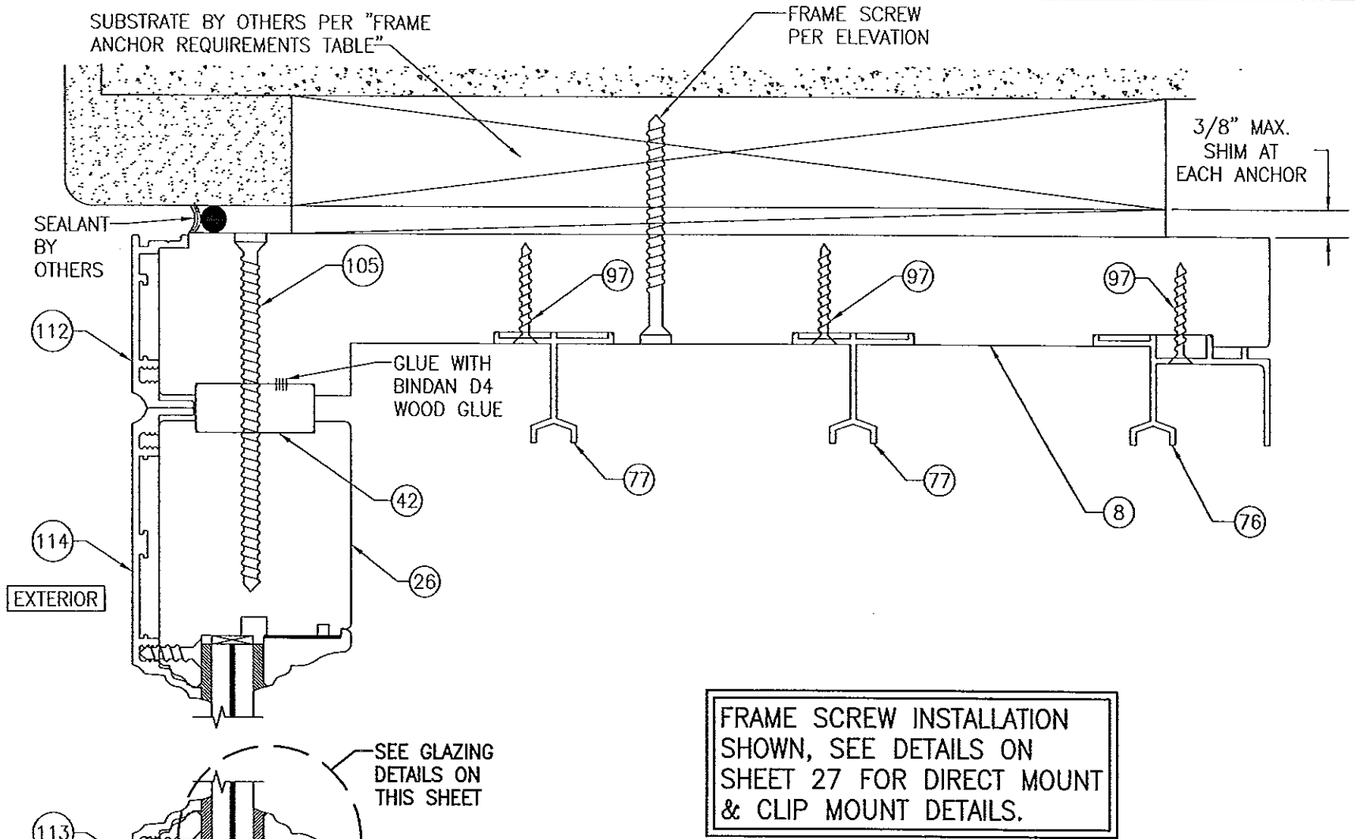

FRAME SCREW INSTALLATION SHOWN, SEE DETAILS ON SHEET 27 FOR DIRECT MOUNT & CLIP MOUNT DETAILS.

SECTION L1/24
SCALE: 1/2 FULL

(STANDARD SILL CONDITION SHOWN. FOR ALTERNATE FLUSH MOUNT SILL CONDITION, SEE "ALTERNATE FLUSH MOUNT SILL DETAILS" ON SHEETS 28–31)

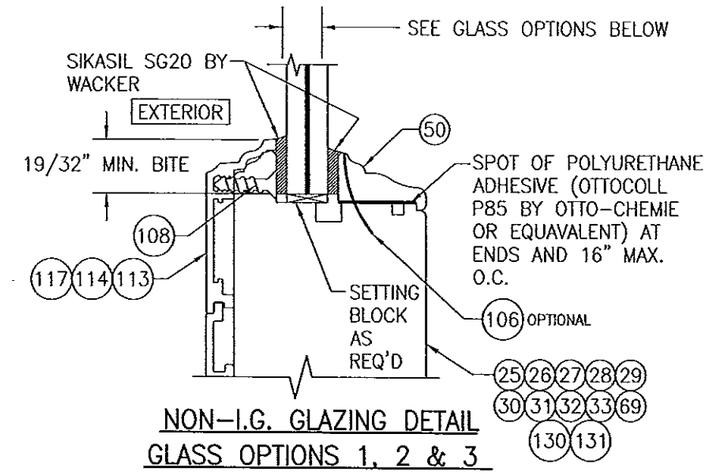

NON-I.G. GLAZING DETAIL
GLASS OPTIONS 1, 2 & 3

GLASS OPTION 1: 1/2" LAMINATED GLASS (3/16" H.S./0.075" EASTMAN CHEMICAL CO. SAFLEX CP/1/4" H.S.)
GLASS OPTION 2: 9/16" LAMINATED GLASS (3/16" H.S./0.12" EASTMAN CHEMICAL CO. SAFLEX/1/4" H.S.)
GLASS OPTION 3: 9/16" LAMINATED GLASS (1/4" H.S./0.075" EASTMAN CHEMICAL CO. SAFLEX CP/1/4" H.S.)

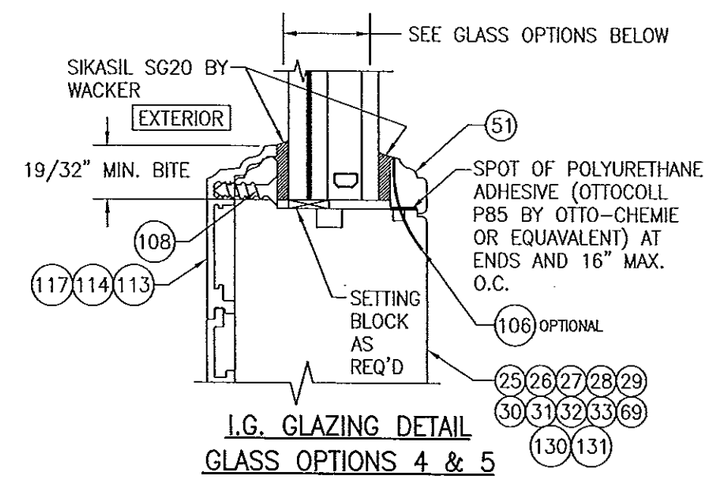

I.G. GLAZING DETAIL
GLASS OPTIONS 4 & 5

GLASS OPTION 4: 1 1/4" LAMINATED I.G. (3/16" H.S./0.12" EASTMAN CHEMICAL CO. SAFLEX/1/4" H.S./1/2" AIR SPACE/3/16 TEMP.)

GLASS OPTION 5: 1 5/16" LAMINATED I.G. (1/4" H.S./0.075" EASTMAN CHEMICAL CO. SAFLEX CP/1/4" H.S./1/2" AIR SPACE/1/4 TEMP.)

PRODUCT REVISED
Complying with the Florida Building Code
Acceptance No. 13-0717.10
Expiration Date 11/24/15
By
Dade Product Control

WARREN W. SCHAEFER LICENSE No 44135 STATE OF FLORIDA PROFESSIONAL ENGINEER

DRAWN BY: W.R.M.	CHECKED BY: W.W.S.
PLOT: 1=24	DATE: 04/04/09

NO.	REVISION DESCRIPTION	BY	DATE

DRAWING TITLE
LIFT & SLIDE BRONZE CLAD SLIDING GLASS IMPACT DOORS

MANUFACTURER
PEETZ WINDOWS & DOORS
15951 S.W. 41ST STREET; SUITE 150
WESTON, FL 33331
954-659-3887

CONSULTANTS
W. W. SCHAEFER ENGINEERING & CONSULTING, P.A. (CA 6809)
7480 150TH COURT NORTH
PALM BEACH GARDENS, FL 33418
PHONE: 561-744-3424

CERTIFICATION
NOV 06 2013
WARREN W. SCHAEFER P.E. NO. 44135

DRAWING NO. 1632 REV. B
SHEET NO. 24 OF 38

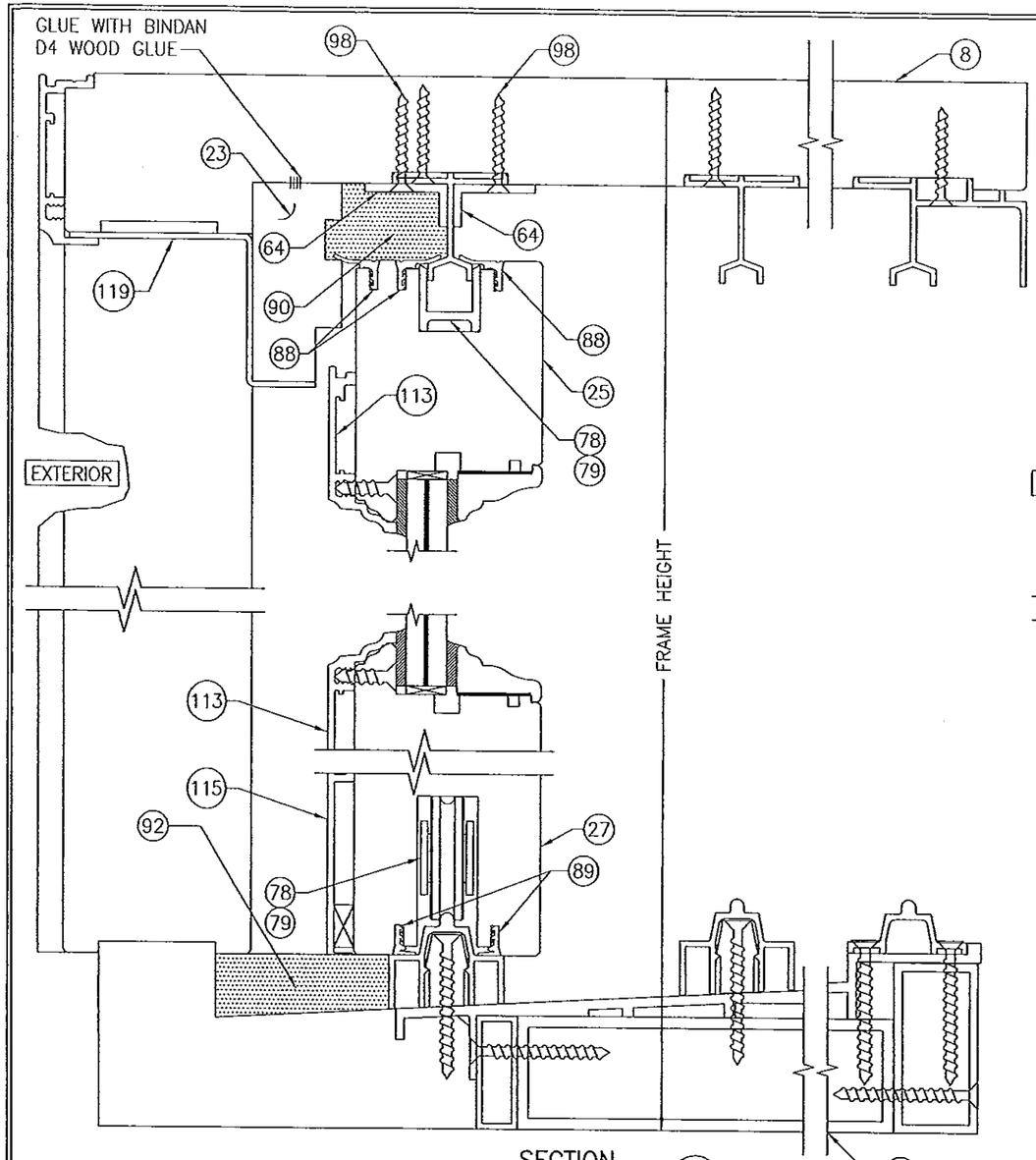

SECTION L2/25
SCALE: 1/2 FULL

FOR INSTALLATION & OTHER DETAIL NOT SHOWN, SEE SECTION L1/24

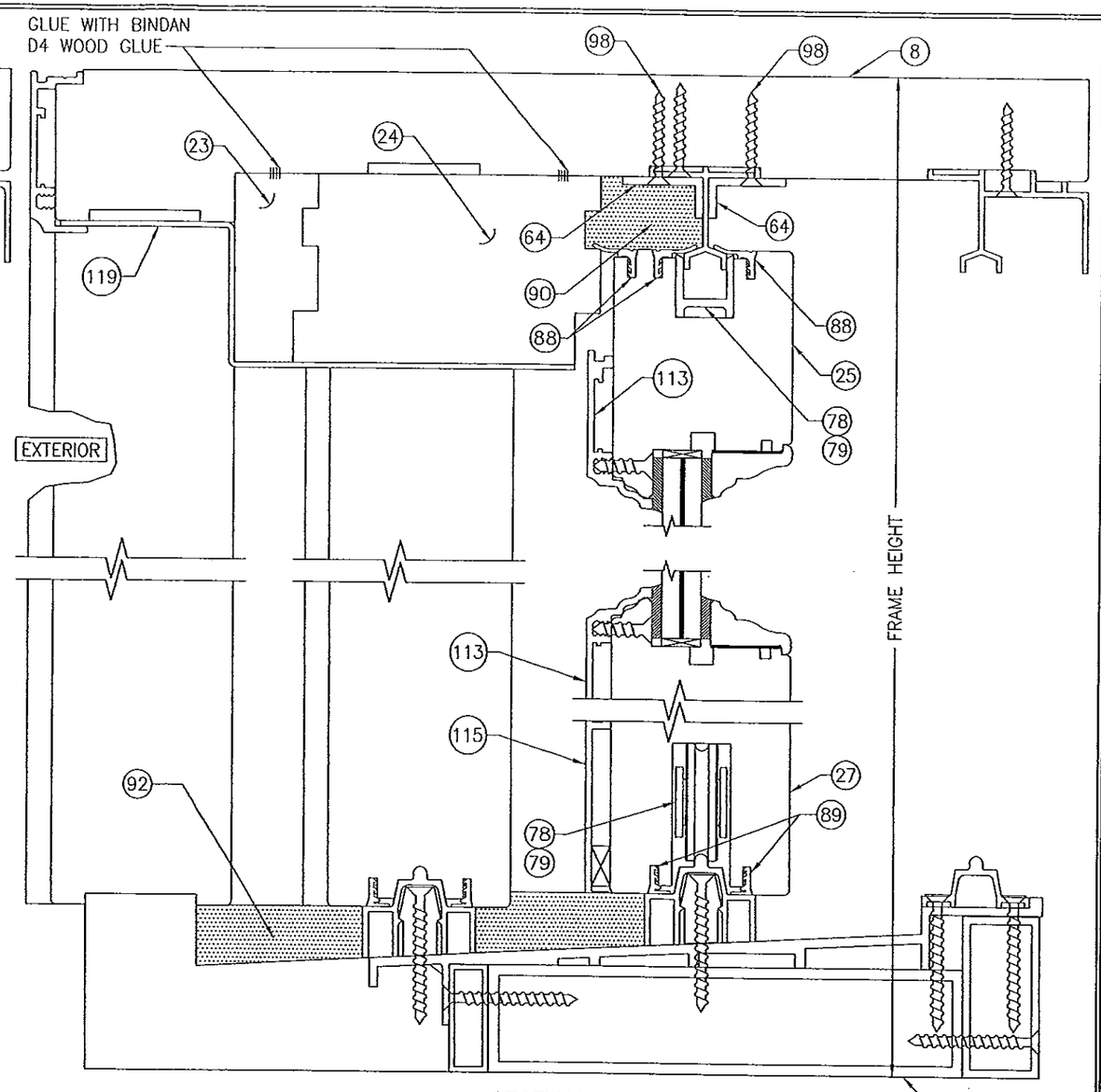

SECTION L3/25
SCALE: 1/2 FULL

FOR INSTALLATION & OTHER DETAIL NOT SHOWN, SEE SECTION L1/24

PRODUCT REVISED
in complying with the Florida
Building Code
Acceptance No. 13-0717.10
Expiration Date 11/24/15
By
Miami-Dade Product Control

WARREN W. SCHAEFER
LICENSE No. 44135
STATE OF FLORIDA
PROFESSIONAL ENGINEER

NO.	REVISION DESCRIPTION	BY	DATE

DRAWN BY: W.R.M.
CHECKED BY: W.W.S.
PLOT: 1=24
DATE: 04/04/09

DRAWING TITLE
LIFT & SLIDE BRONZE CLAD SLIDING GLASS IMPACT DOORS

MANUFACTURER
PEETZ WINDOWS & DOORS
15951 S.W. 41ST STREET; SUITE 150
WESTON, FL 33331
954-659-3887

CONSULTANTS
W. W. SCHAEFER ENGINEERING & CONSULTING, P.A. (CA 6809)
7480 150TH COURT NORTH
PALM BEACH GARDENS, FL 33418
PHONE: 561-744-3424

CERTIFICATION
NOV 06 2013
WARREN W. SCHAEFER, P.E.
P.E. NO. 44135

DRAWING NO. 1632
REV. B
SHEET NO. 25 OF 38

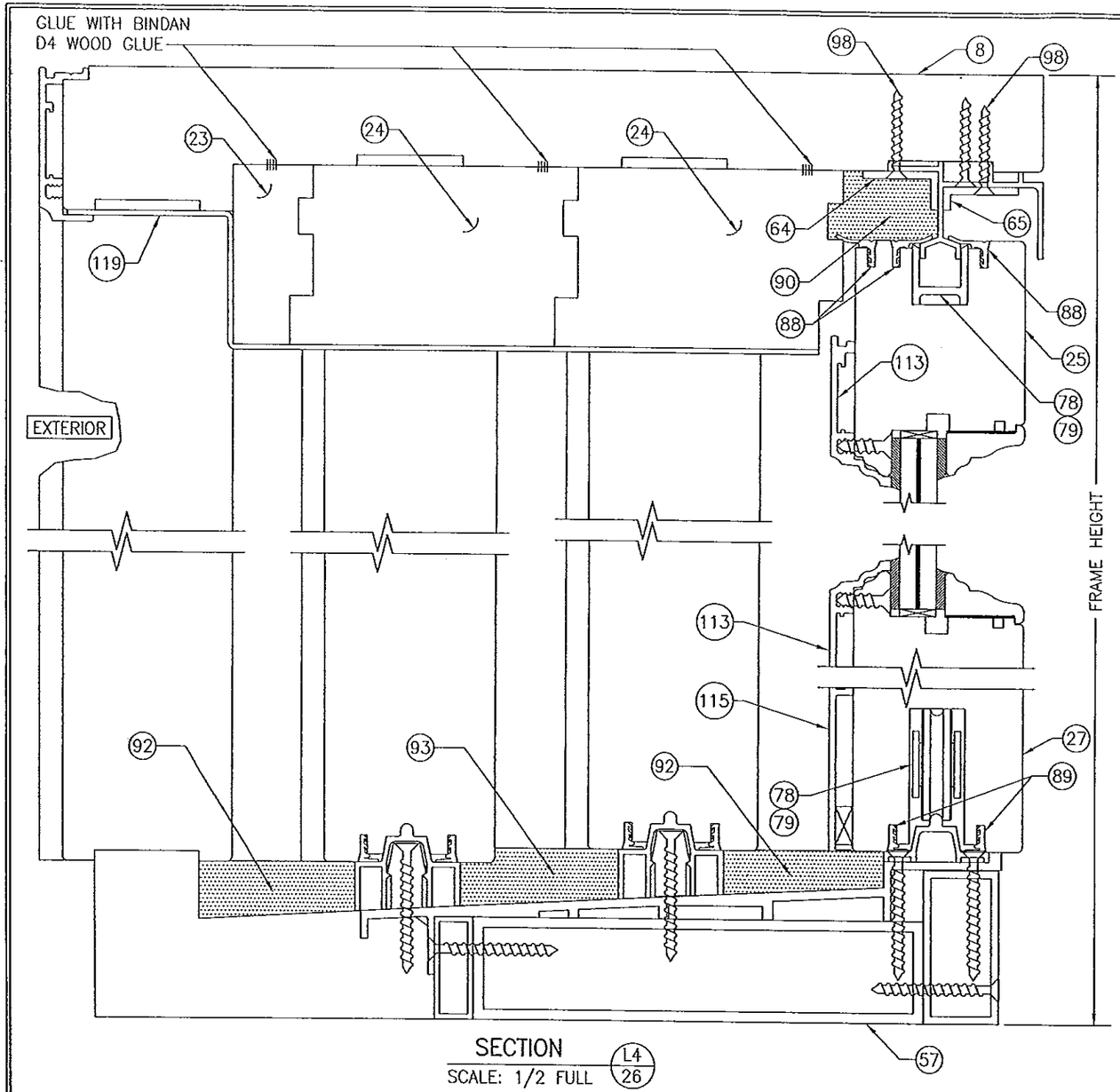

SECTION L4/26
SCALE: 1/2 FULL

FOR INSTALLATION & OTHER DETAIL NOT SHOWN, SEE SECTION L1/24

FRAME SCREW INSTALLATION SHOWN, SEE DETAILS ON SHEET 27 FOR DIRECT MOUNT & CLIP MOUNT DETAILS.

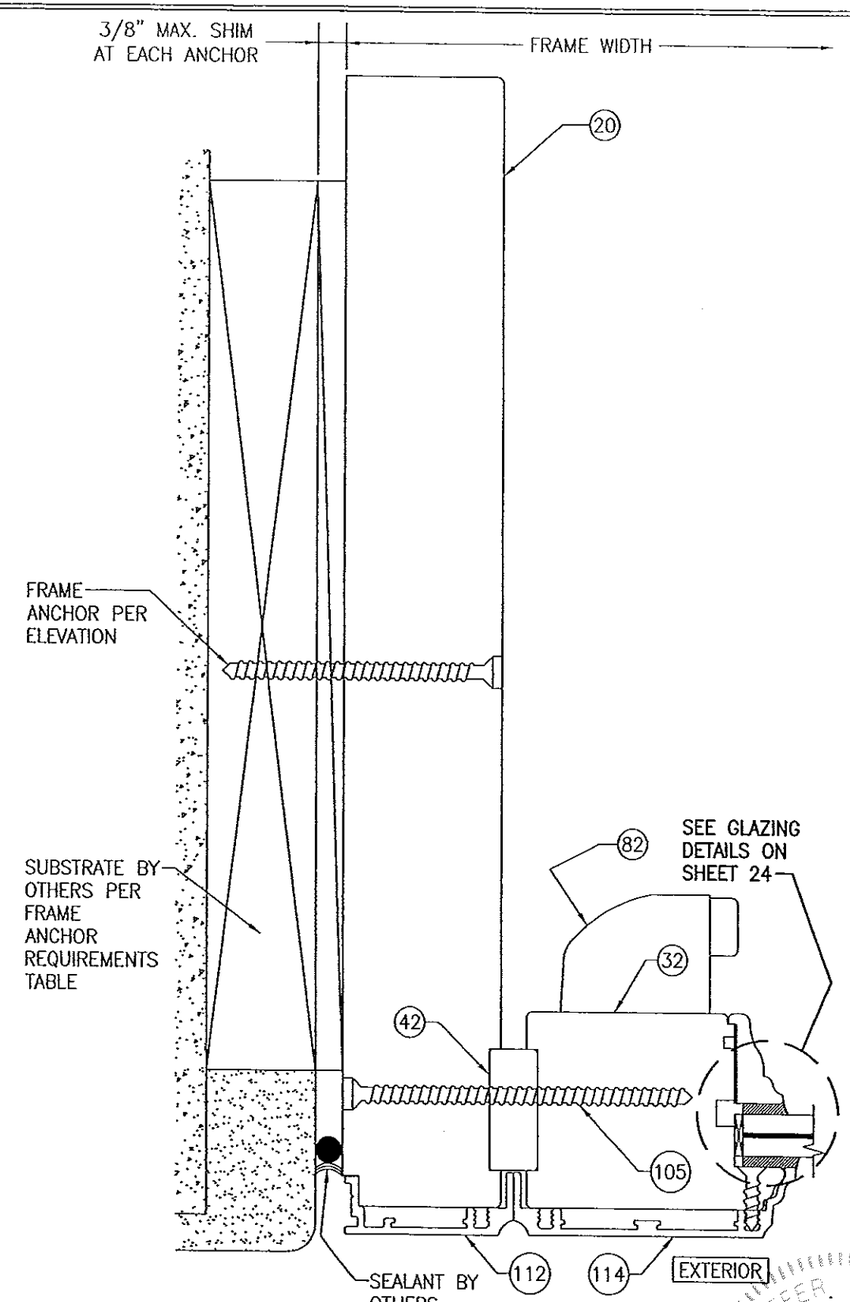

SECTION M1/26
SCALE: 1/2 FULL

PRODUCT REVISED
in compliance with the Florida Building Code
Acceptance No. 13-0717.10
Expiration Date 11/24/15
By Miami Dade Product Control

WARREN W. SCHAEFER, P.E. LICENSE No. 44135 STATE OF FLORIDA PROFESSIONAL ENGINEER

NO.	REVISION DESCRIPTION	BY	DATE

DRAWN BY: W.R.U.
CHECKED BY: W.W.S.
PLOT: 1=24
DATE: 04/04/09

DRAWING TITLE
LIFT & SLIDE BRONZE CLAD SLIDING GLASS IMPACT DOORS

MANUFACTURER
PEETZ WINDOWS & DOORS
15951 S.W. 41ST STREET; SUITE 150
WESTON, FL 33331
954-659-3887

CONSULTANTS
W. W. SCHAEFER ENGINEERING & CONSULTING, P.A. (CA 6809)
7480 150TH COURT NORTH
PALM BEACH GARDENS, FL 33418
PHONE: 561-744-3424

CERTIFICATION
NOV 06 2013
WARREN W. SCHAEFER, P.E.
P.E. NO. 44135

DRAWING NO. 1632
REV. B
SHEET NO. 26 OF 38

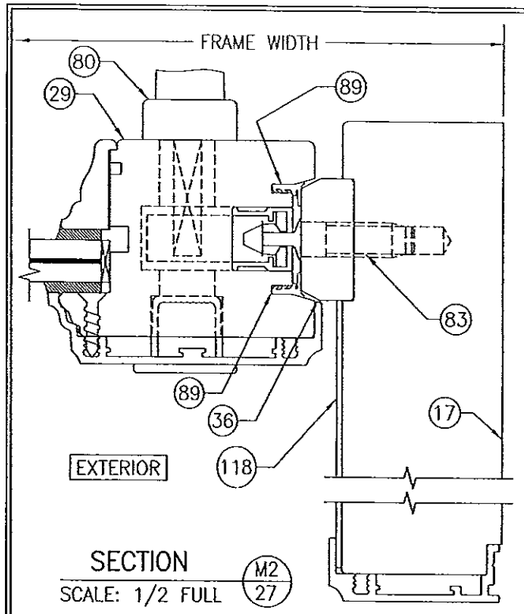

SECTION M2/27
SCALE: 1/2 FULL

FOR INSTALLATION & OTHER DETAIL NOT SHOWN, SEE SECTION M1/26

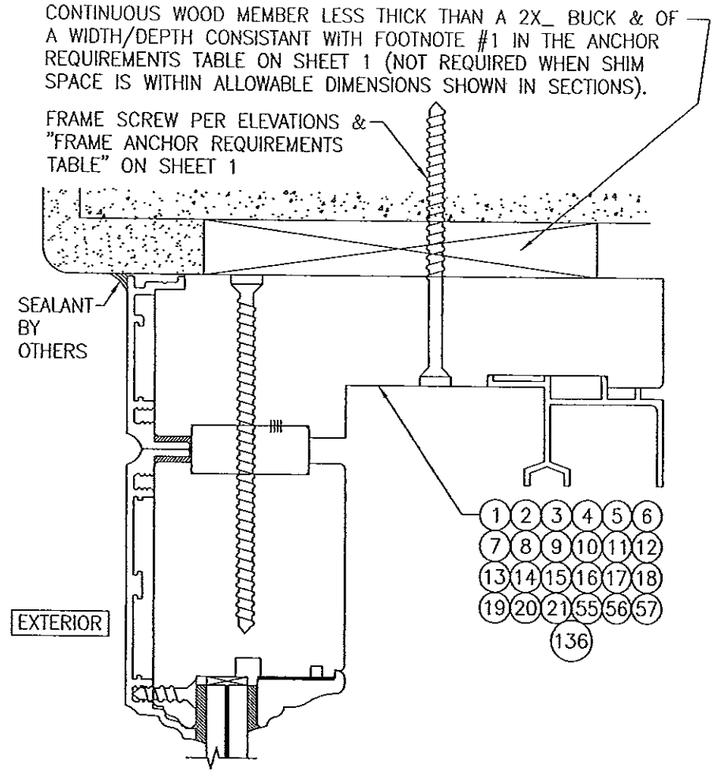

OPTIONAL DIRECT MOUNT DETAIL TO SUBSTRATE WITH SPACER

(2 PANEL DEEP HEAD SECTION SHOWN, ALL OTHER APPROVED HEAD, SILL & SIDE CONDITIONS ARE INSTALLED THE SAME)
(FOR DETAIL NOT SHOWN, SEE OTHER SECTIONS)

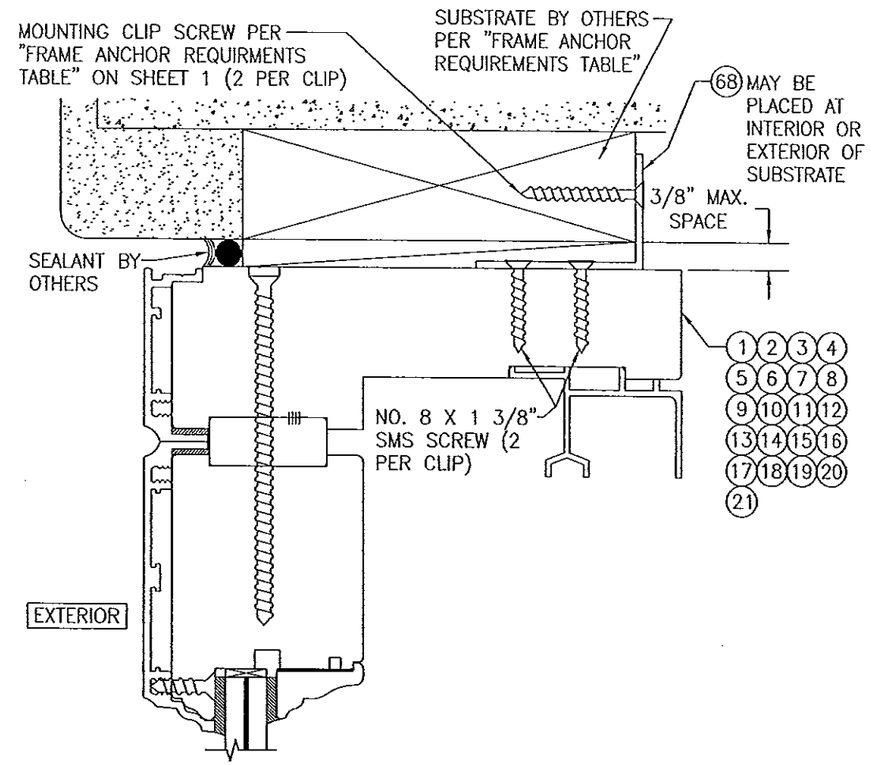

OPTIONAL MOUNTING CLIP DETAIL AT HEAD & SIDES

(2 PANEL DEEP HEAD SECTION SHOWN, ALL OTHER APPROVED HEAD & SIDE CONDITIONS ARE INSTALLED THE SAME)
(FOR DETAIL NOT SHOWN, SEE OTHER SECTIONS)

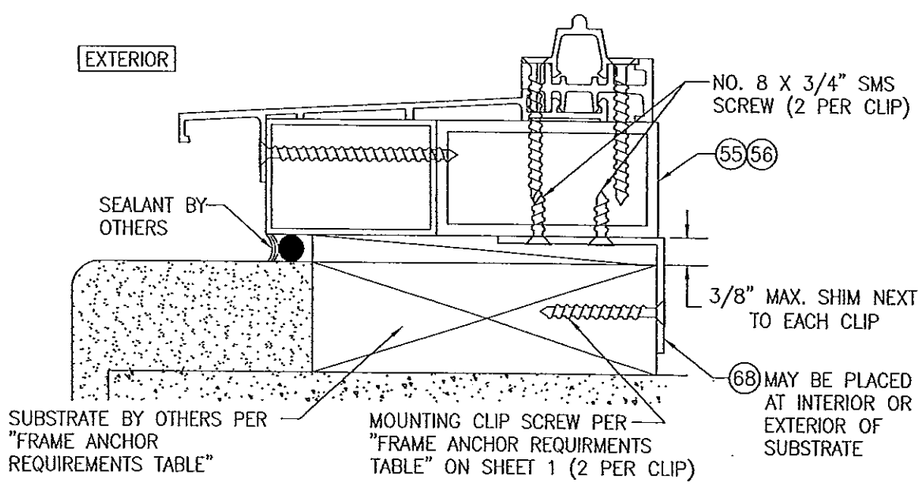

OPTIONAL MOUNTING CLIP DETAIL AT 1 & 2 PANEL DEEP SILLS

(1 PANEL DEEP SILL SECTION SHOWN, 2 PANEL DEEP SILL IS INSTALLED THE SAME)
(FOR DETAIL NOT SHOWN, SEE OTHER SECTIONS)
(NOT APPLICABLE WITH FLUSH MOUNT SILL)

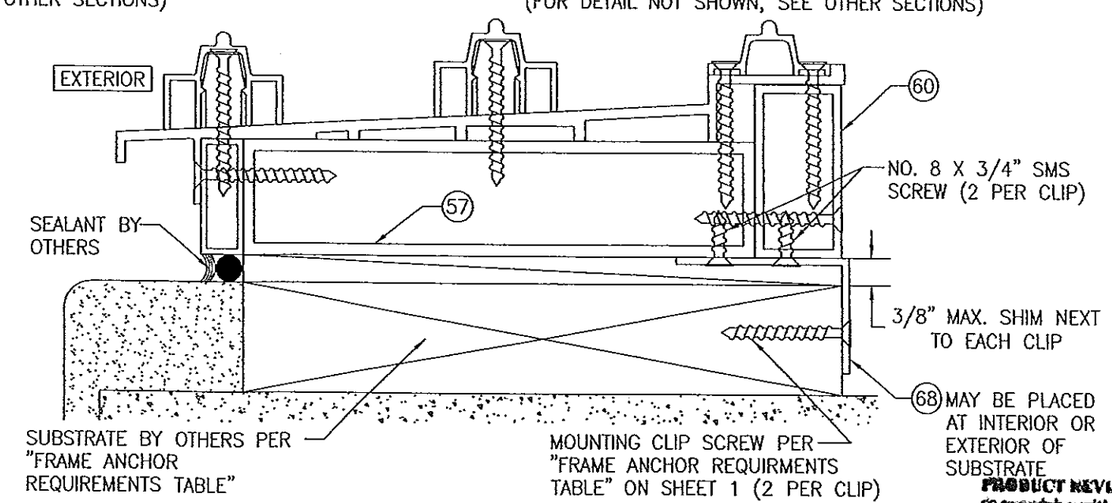

OPTIONAL MOUNTING CLIP DETAIL AT 3 & 4 PANEL DEEP SILLS

(3 PANEL DEEP SILL SECTION SHOWN, 4 PANEL DEEP SILL IS INSTALLED THE SAME)
(FOR DETAIL NOT SHOWN, SEE OTHER SECTIONS)
(NOT APPLICABLE WITH FLUSH MOUNT SILL)

NOV 06 2013

PRODUCT REVISED
to comply with the Florida Building Code
Acceptance No. 13-0717.10
Expiration Date 11/24/15
By
Dade Product Control

NO.	REVISION DESCRIPTION	BY	DATE

DRAWN BY: W.R.M. | CHECKED BY: W.W.S.
PLOT: 1=24 | DATE: 04/04/09

DRAWING TITLE
LIFT & SLIDE BRONZE CLAD SLIDING GLASS IMPACT DOORS

MANUFACTURER
PEETZ WINDOWS & DOORS
15951 S.W. 41ST STREET; SUITE 150
WESTON, FL 33331
954-659-3887

CONSULTANTS
W. SCHAEFER ENGINEERING & CONSULTING, P.A. (CA 6809)
7480 150TH COURT NORTH
PALM BEACH GARDENS, FL 33418
PHONE: 561-744-3424

CERTIFICATION
WARREN W. SCHAEFER P.E. NO. 44135
NOV 06 2013

DRAWING NO. 1632 | REV. B
SHEET NO. 27 OF 38

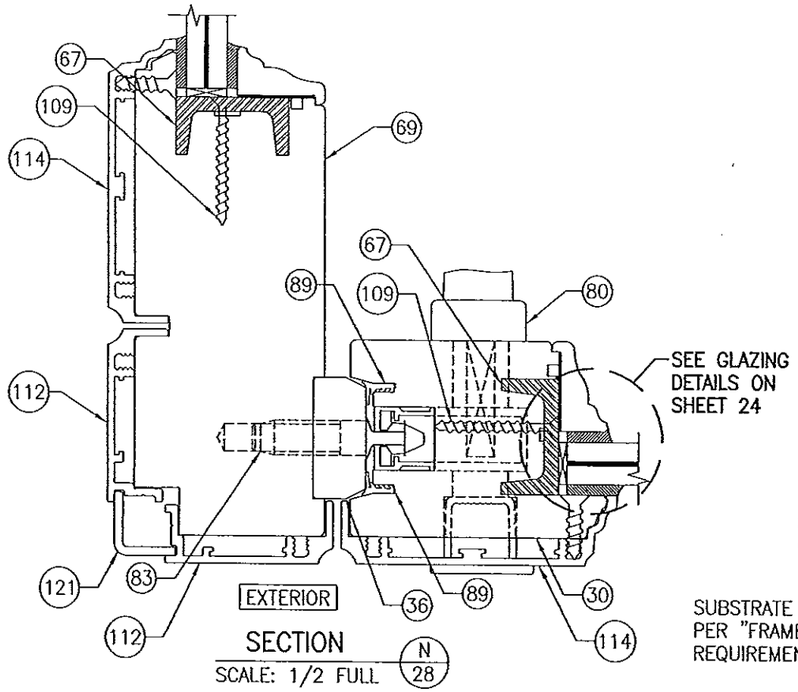

SECTION N/28
SCALE: 1/2 FULL

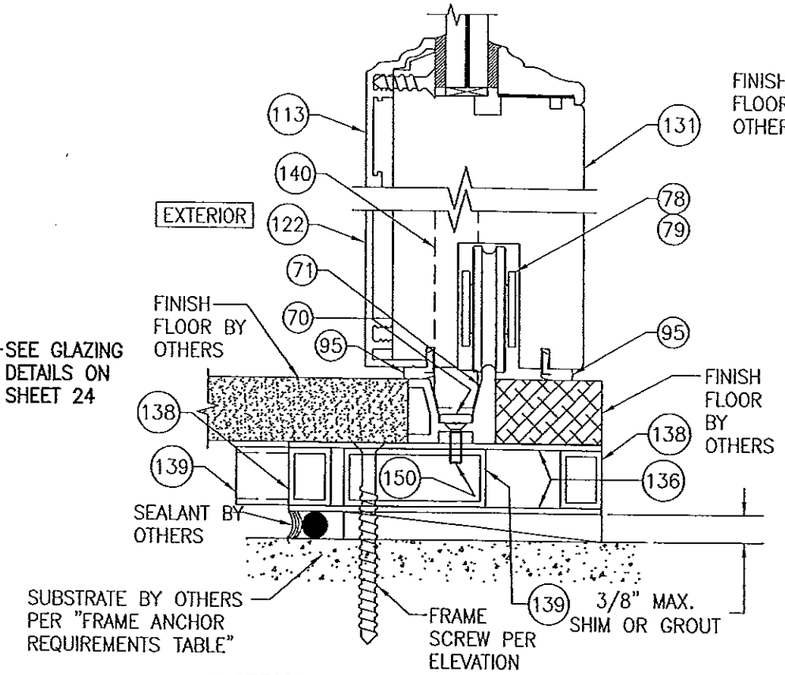

ALTERNATE FLUSH MOUNT SILL DETAIL
(ALTERNATE TO SECTION A1/14)

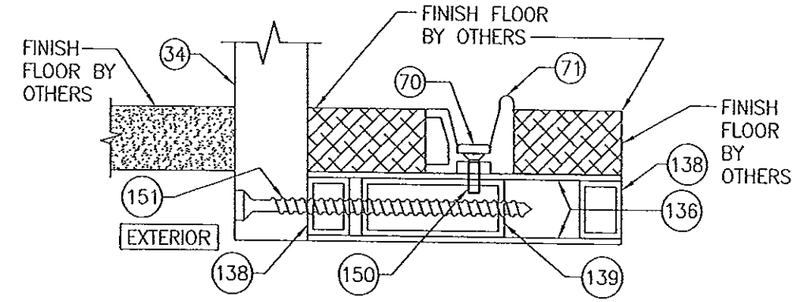

ALTERNATE FLUSH MOUNT SILL DETAIL
(ALTERNATE TO SECTION A2/14)
(FOR INSTALLATION NOT SHOWN, SEE ALTERNATE SECTION A1 ON THIS SHEET)

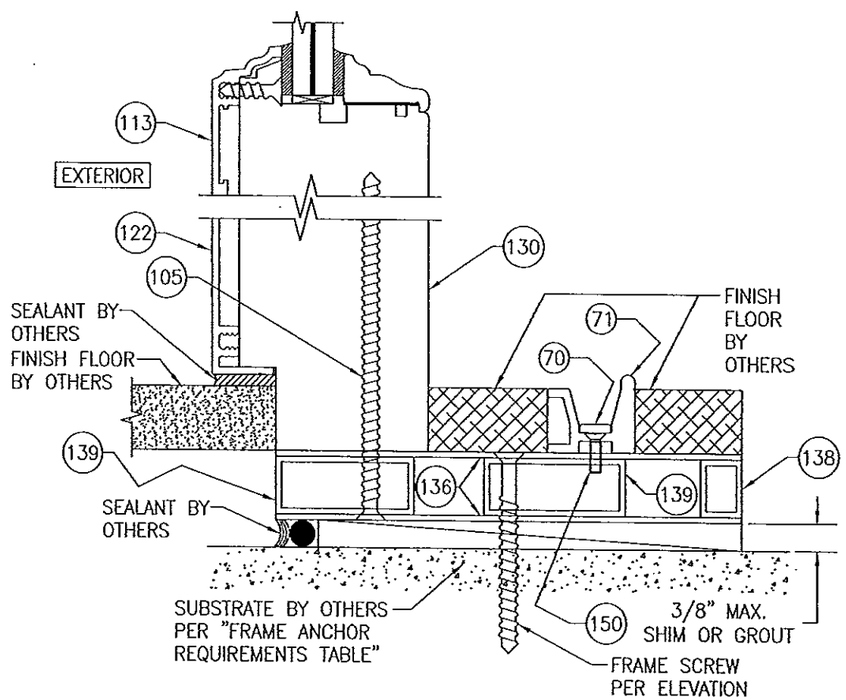

ALTERNATE FLUSH MOUNT SILL DETAIL
(ALTERNATE TO SECTION F1/15)

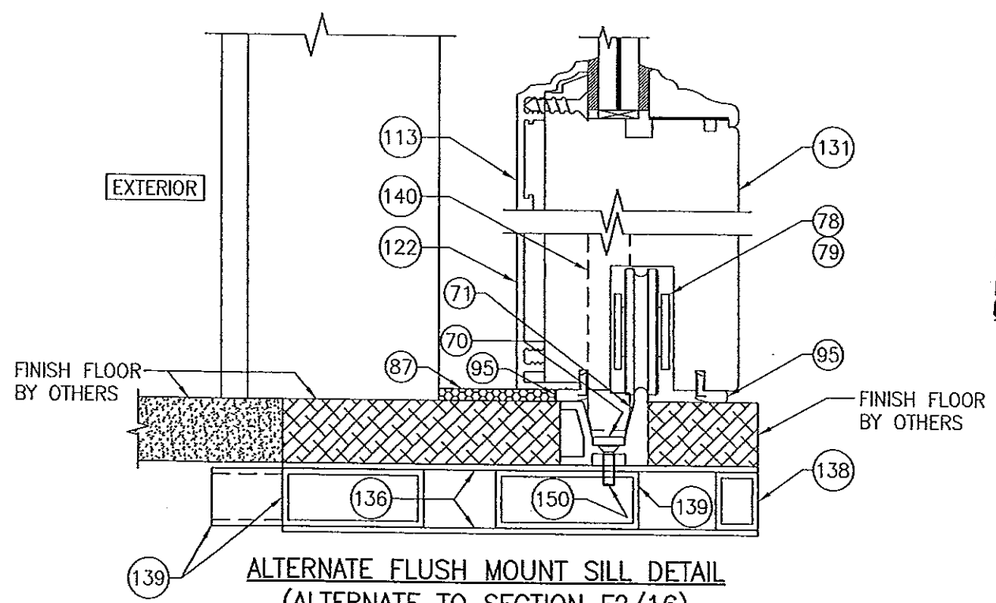

ALTERNATE FLUSH MOUNT SILL DETAIL
(ALTERNATE TO SECTION F2/16)
(FOR INSTALLATION NOT SHOWN, SEE ALTERNATE SECTION F1 ON THIS SHEET)

PRODUCT REVISED
as complying with the Florida Building Code
Acceptance No. 13-0717.10
Expiration Date 11/24/15
By [signature]
Office of Unit Product Control

WARREN W. SCHAEFER LICENSE No 44135 STATE OF FLORIDA PROFESSIONAL ENGINEER

DRAWN BY: W.R.M.	CHECKED BY: W.W.S.
PLOT: 1=2	DATE: 04/04/09

NO.	REVISION DESCRIPTION	BY	DATE

DRAWING TITLE
LIFT & SLIDE BRONZE CLAD SLIDING GLASS IMPACT DOORS

MANUFACTURER
PEETZ WINDOWS & DOORS
15951 S.W. 41ST STREET; SUITE 150
WESTON, FL 33331
954-659-3887

CONSULTANTS
W. W. SCHAEFER ENGINEERING & CONSULTING, P.A. (CA 6809)
7480 150TH COURT NORTH
PALM BEACH GARDENS, FL 33418
PHONE: 561-744-3424

CERTIFICATION
NOV 06 2013
WARREN W. SCHAEFER, P.E.
P.E. NO. 44135

DRAWING NO. 1632 REV. B
SHEET NO. 28 OF 38

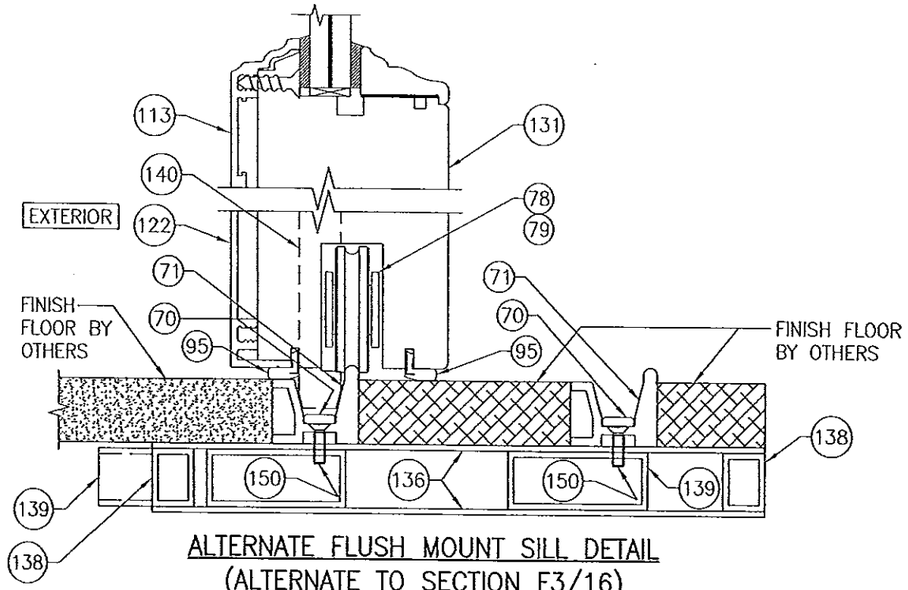

ALTERNATE FLUSH MOUNT SILL DETAIL
(ALTERNATE TO SECTION F3/16)
(FOR INSTALLATION NOT SHOWN, SEE ALTERNATE SECTION F1 ON SHEET 28)

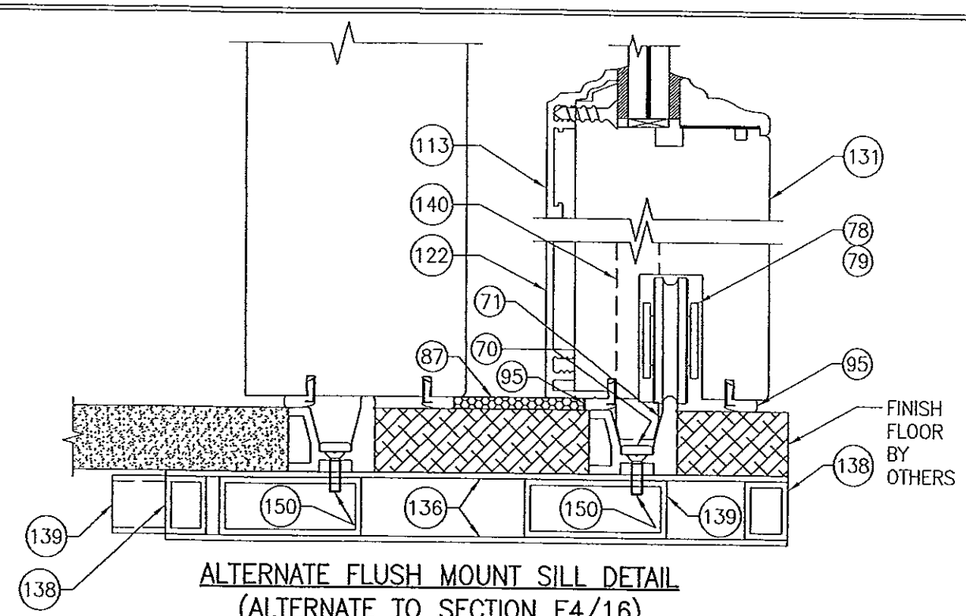

ALTERNATE FLUSH MOUNT SILL DETAIL
(ALTERNATE TO SECTION F4/16)
(FOR INSTALLATION NOT SHOWN, SEE ALTERNATE SECTION F1 ON SHEET 28)

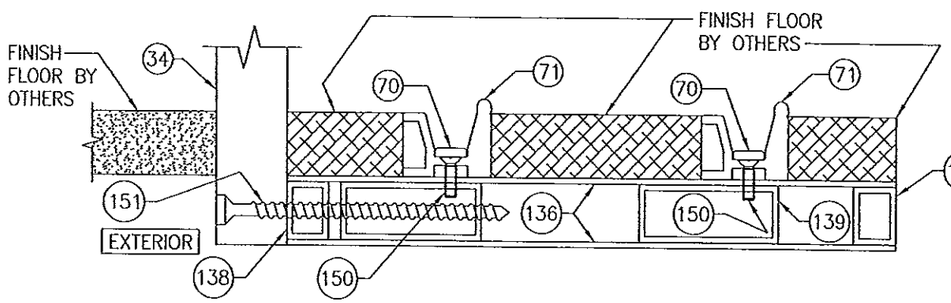

ALTERNATE FLUSH MOUNT SILL DETAIL
(ALTERNATE TO SECTION F7/17)
(FOR INSTALLATION NOT SHOWN, SEE ALTERNATE SECTION F1 ON SHEET 28)

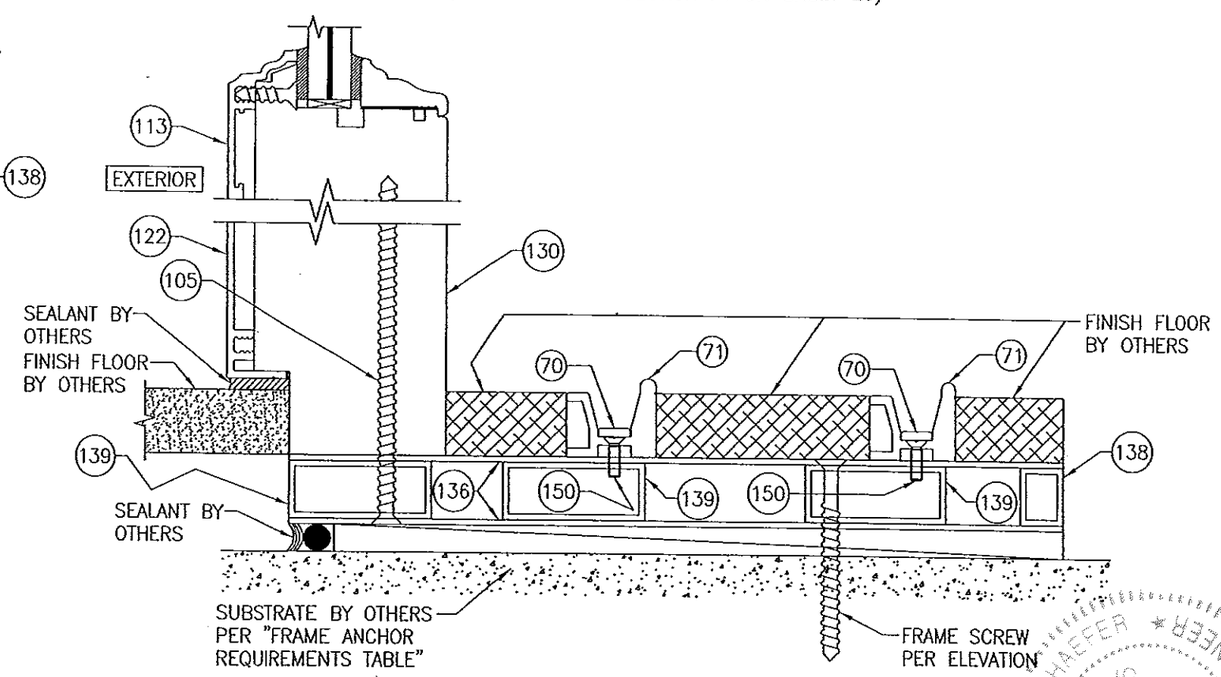

ALTERNATE FLUSH MOUNT SILL DETAIL
(ALTERNATE TO SECTION J1/18)

PRODUCT REVISED
as complying with the Florida Building Code
Acceptance No. 13-0717.10
Expiration Date 11/24/15
By
Miami Dade Product Control

WARREN W. SCHAEFER LICENSE No 44135 STATE OF FLORIDA PROFESSIONAL ENGINEER

DRAWN BY: W.R.M.	CHECKED BY: W.W.S.
PLOT: 1=2	DATE: 04/04/09

NO.	REVISION DESCRIPTION	BY	DATE

DRAWING TITLE
LIFT & SLIDE BRONZE CLAD SLIDING GLASS IMPACT DOORS

MANUFACTURER
PEETZ WINDOWS & DOORS
15951 S.W. 41ST STREET; SUITE 150
WESTON, FL 33331
954-659-3887

CONSULTANTS
W. W. SCHAEFER ENGINEERING & CONSULTING, P.A. (CA 6809)
7480 150TH COURT NORTH
PALM BEACH GARDENS, FL 33418
PHONE: 561-744-3424

CERTIFICATION
NOV 06 2013
WARREN W. SCHAEFER, P.E.
P.E. NO. 44135

DRAWING NO. 1632 REV. B
SHEET NO. 29 OF 38

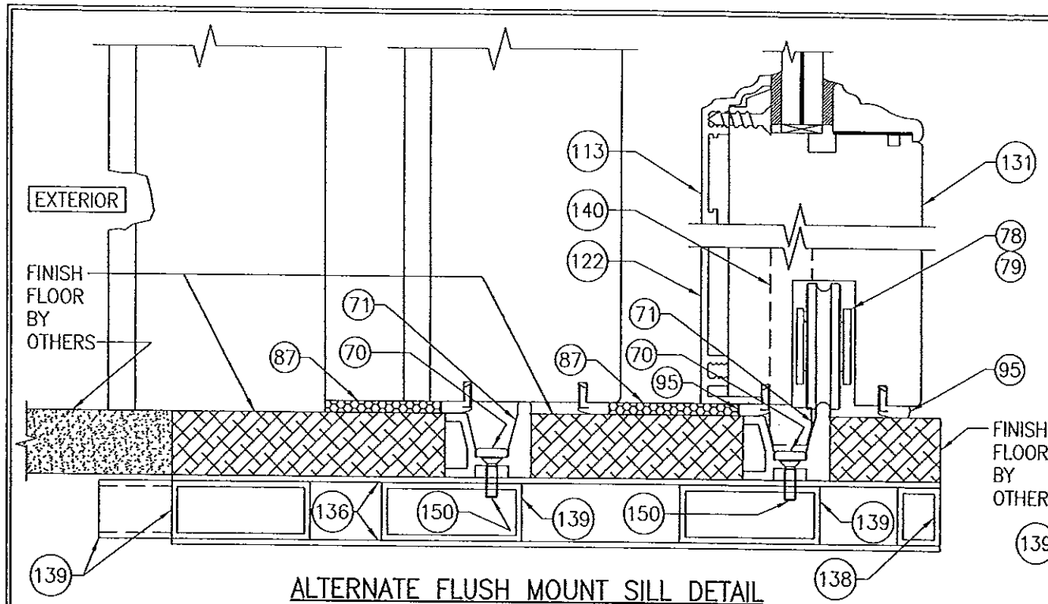

ALTERNATE FLUSH MOUNT SILL DETAIL
(ALTERNATE TO SECTIONS J2/19 & J3/19)
(FOR INSTALLATION NOT SHOWN, SEE ALTERNATE SECTION J1 ON SHEET 29)

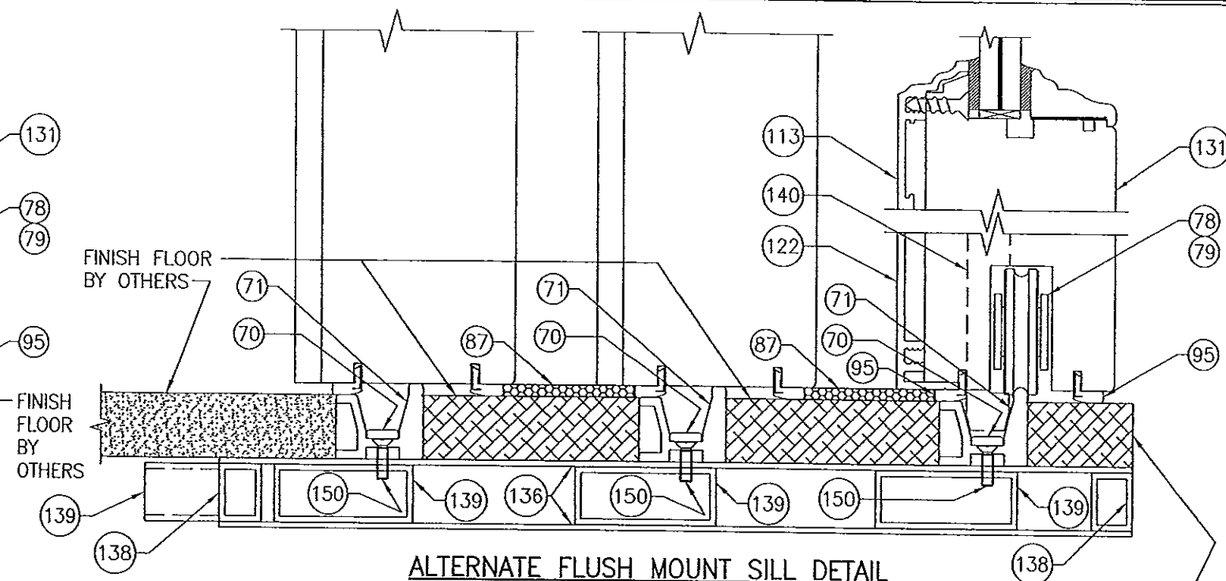

ALTERNATE FLUSH MOUNT SILL DETAIL
(ALTERNATE TO SECTIONS J4/20, J5/20 & J6/21)
(FOR INSTALLATION NOT SHOWN, SEE ALTERNATE SECTION J1 ON SHEET 29)

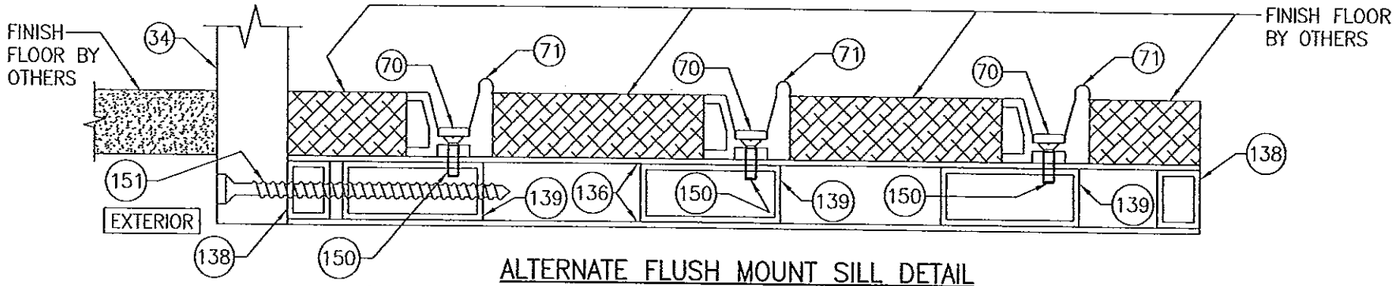

ALTERNATE FLUSH MOUNT SILL DETAIL
(ALTERNATE TO SECTIONS J7/21, J8/21, J9/22 & J10/22)
(FOR INSTALLATION NOT SHOWN, SEE ALTERNATE SECTION J1 ON SHEET 29)

PRODUCT REVISED
as complying with the Florida
Building Code
Acceptance No 13-0717.10
Expiration Date 11/24/15

WARREN W. SCHAEFER * LICENSE No 44135 * STATE OF FLORIDA * PROFESSIONAL ENGINEER

DRAWN BY: W.R.W.	CHECKED BY: W.W.S.
PLOT: 1=2	DATE: 04/04/09

NO.	REVISION DESCRIPTION	BY	DATE

DRAWING TITLE
LIFT & SLIDE BRONZE CLAD SLIDING GLASS IMPACT DOORS

MANUFACTURER
PEETZ WINDOWS & DOORS
15951 S.W. 41ST STREET; SUITE 150
WESTON, FL 33331
954-659-3887

CONSULTANTS
W. W. SCHAEFER ENGINEERING & CONSULTING, P.A. (CA 6809)
7480 150TH COURT NORTH
PALM BEACH GARDENS, FL 33418
PHONE: 561-744-3424

CERTIFICATION
NOV 06 2013
WARREN W. SCHAEFER, P.E.
P.E. NO. 44135

DRAWING NO.	REV.
1632	B

SHEET NO.
30 OF 38

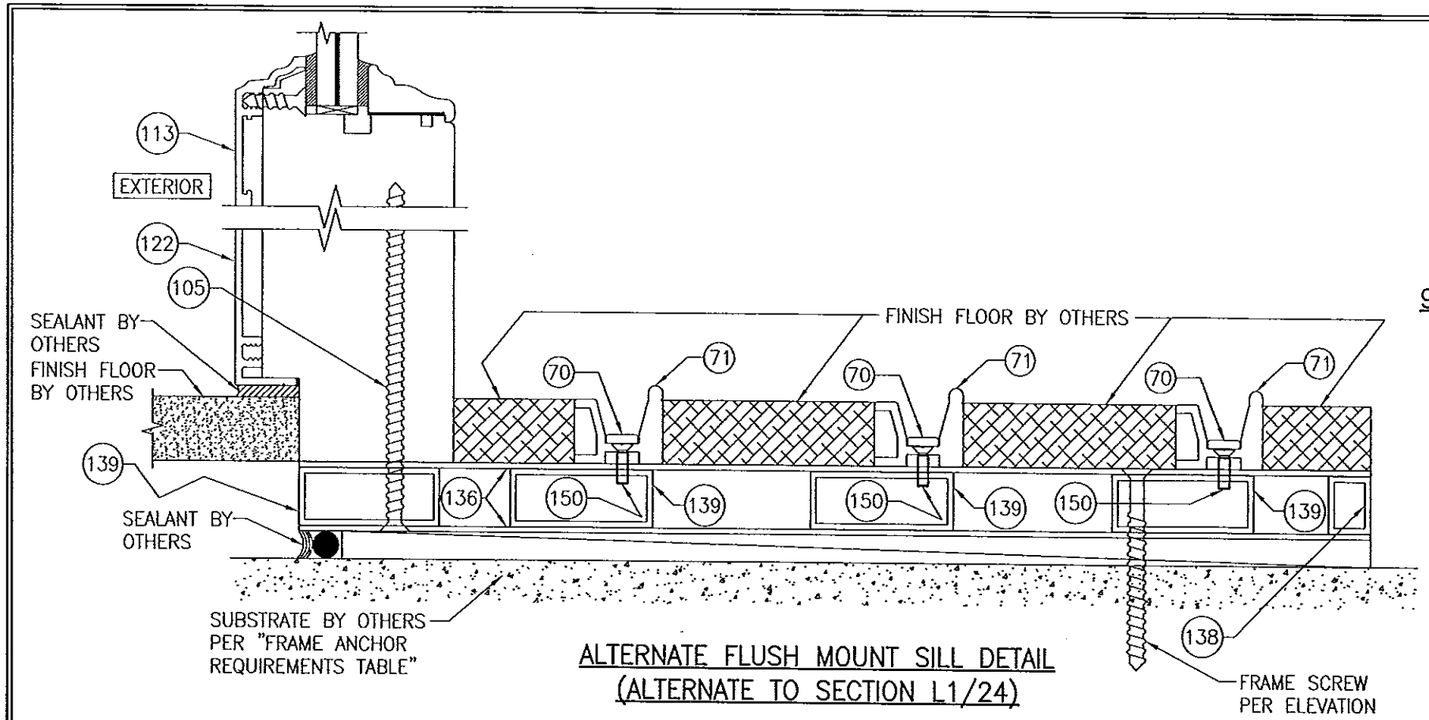

ALTERNATE FLUSH MOUNT SILL DETAIL
(ALTERNATE TO SECTION L1/24)

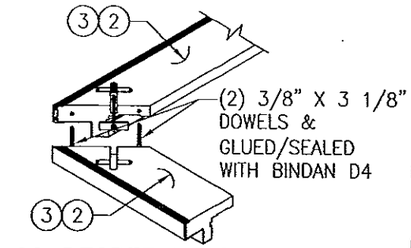

90 DEGREE HEAD CORNER;
2 PANEL TO 2 PANEL

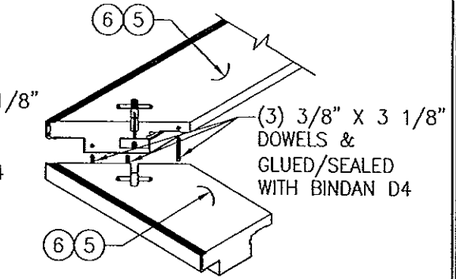

90 DEGREE HEAD CORNER;
3 PANEL TO 3 PANEL

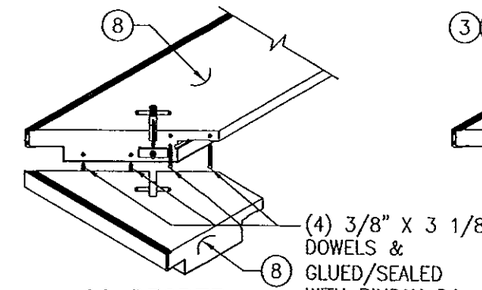

90 DEGREE HEAD CORNER;
4 PANEL TO 4 PANEL

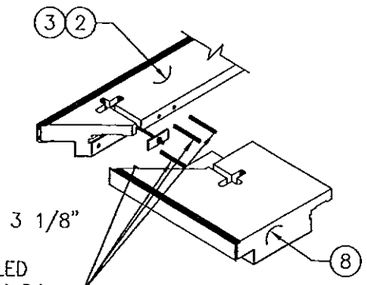

90 DEGREE HEAD CORNER;
2 PANEL TO 4 PANEL

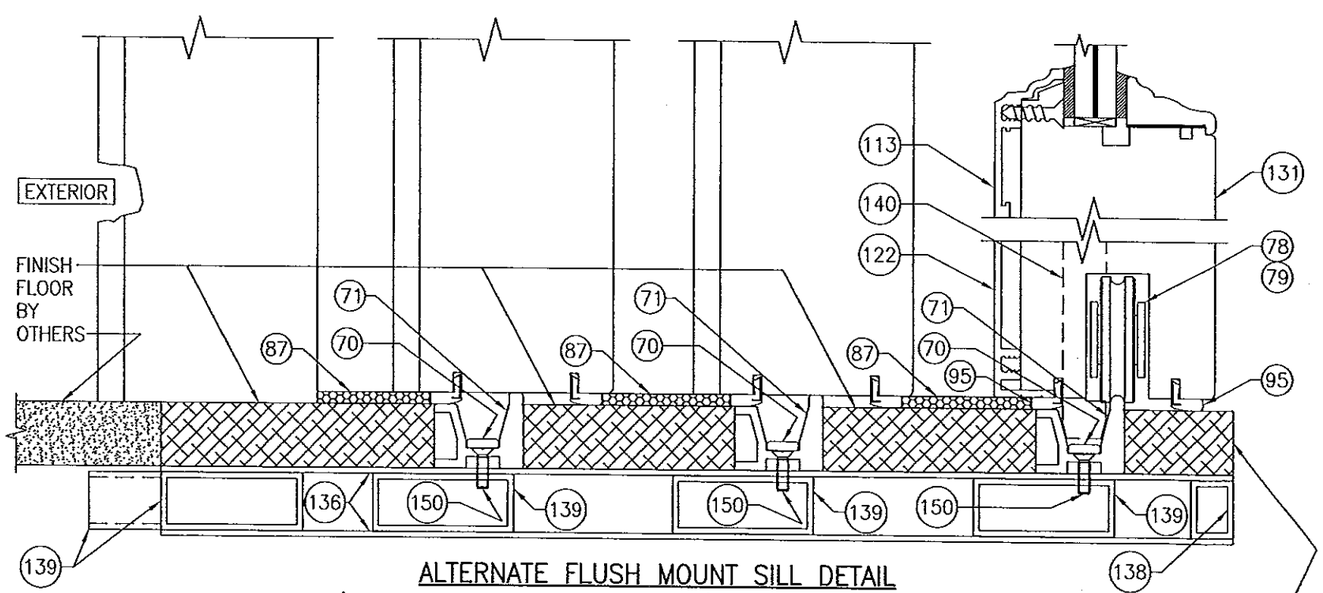

ALTERNATE FLUSH MOUNT SILL DETAIL
(ALTERNATE TO SECTIONS L2/25, L3/25 & L4/26)
(FOR INSTALLATION NOT SHOWN, SEE ALTERNATE SECTION L1 ON THIS SHEET)

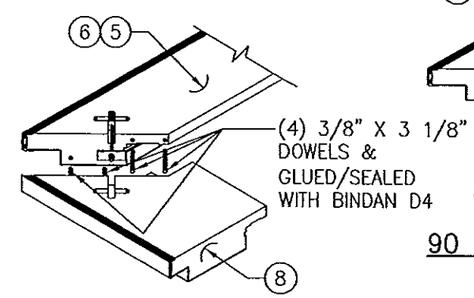

90 DEGREE HEAD CORNER;
3 PANEL TO 4 PANEL

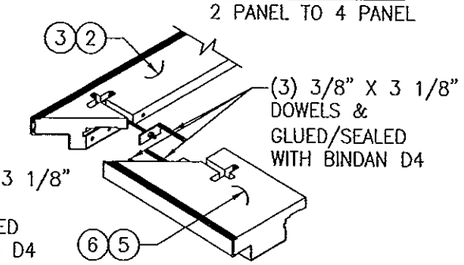

90 DEGREE HEAD CORNER;
2 PANEL TO 3 PANEL

ALL 90 DEGREE HEAD CORNERS:

CORNERS ARE JOINED WITH (2) 1" X 3 1/8" X 3/16" ALUMINUM PLATES, A m6 X 7 1/2" LONG THREADED ROD AND 2 m6 NUTS. ALL WOOD MEMBER CORNER SURFACES ARE GLUED/SEALED WITH BINDAN D4.

PRODUCT REVISED
to complying with the Florida
Building Code
Acceptance No. 13-0717.10
Expiration Date 11/24/15
By
Miami Dade Product Control

WARREN W. SCHAEFER LICENSE No. 44135 STATE OF FLORIDA PROFESSIONAL ENGINEER

DRAWN BY: W.R.M.	CHECKED BY: W.W.S.
PLOT: 1=2	DATE: 04/04/09

NO.	REVISION DESCRIPTION	BY	DATE

DRAWING TITLE
LIFT & SLIDE BRONZE CLAD SLIDING GLASS IMPACT DOORS

MANUFACTURER
PEETZ WINDOWS & DOORS
15951 S.W. 41ST STREET; SUITE 150
WESTON, FL 33331
954-659-3887

CONSULTANTS
W. W. SCHAEFER ENGINEERING & CONSULTING, P.A. (CA 6809)
7480 150TH COURT NORTH
PALM BEACH GARDENS, FL 33418
PHONE: 561-744-3424

CERTIFICATION
NOV 06 2013
WARREN W. SCHAEFER P.E.
P.E. NO. 44135

DRAWING NO. 1632
REV. B
SHEET NO. 31 OF 38

TUBE TO TUBE CONNECTIONS & PLATE TO TUBE SURFACES ARE JOINED WITH PARSON ADHESIVE'S PARTITE 7310 METACRYLATE ADHESIVE. THE ADHESIVE SHALL BE APPLIED TO THE FULL SURFACE OF THE END CONNECTIONS & THE MEETING SURFACES BETWEEN PLATES & TUBES.

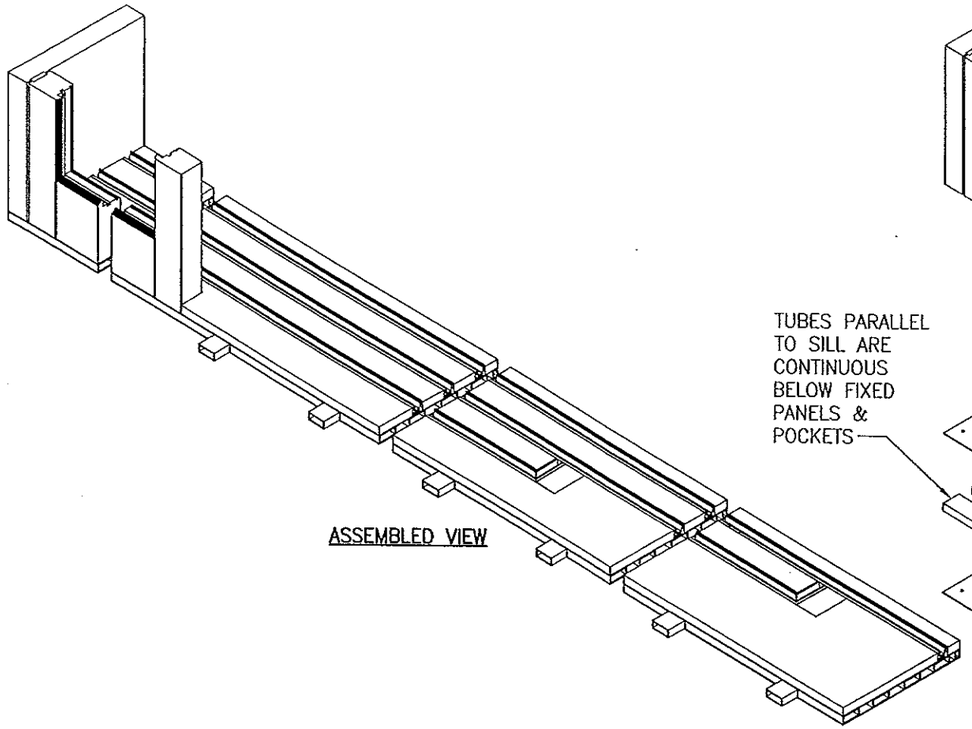

ASSEMBLED VIEW

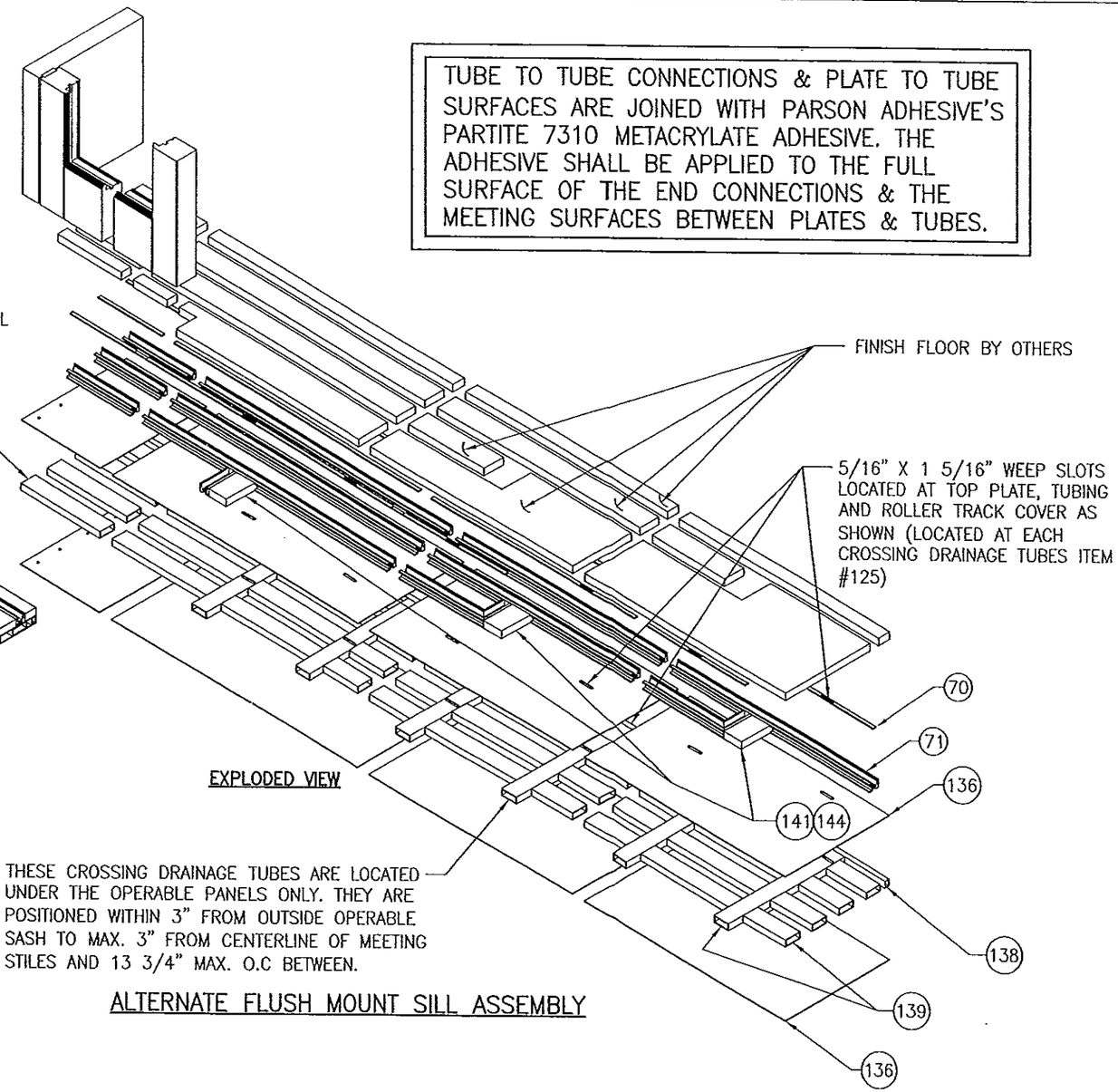

EXPLODED VIEW

THESE CROSSING DRAINAGE TUBES ARE LOCATED UNDER THE OPERABLE PANELS ONLY. THEY ARE POSITIONED WITHIN 3" FROM OUTSIDE OPERABLE SASH TO MAX. 3" FROM CENTERLINE OF MEETING STILES AND 13 3/4" MAX. O.C BETWEEN.

ALTERNATE FLUSH MOUNT SILL ASSEMBLY

ALTERNATE FLUSH MOUNT SILL CORNER CONSTRUCTION DETAIL

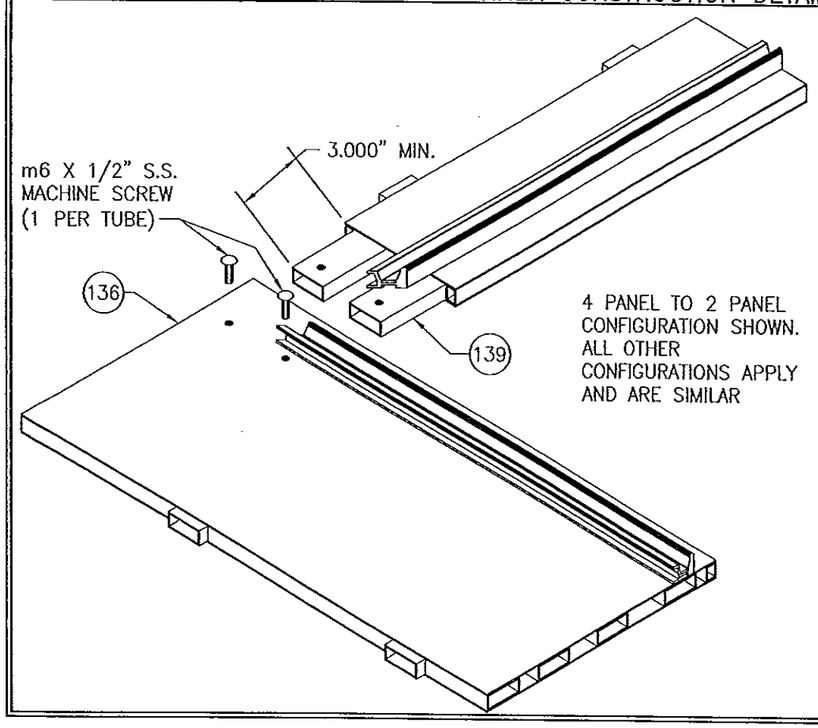

PRODUCT REVISED
as to complying with the Florida
Building Code
Acceptance No. 13-0717.10
Expiration Date 11/24/15
By
Official Date Product Control

WARREN W. SCHAEFER
LICENSE
No. 44135
STATE OF FLORIDA
PROFESSIONAL ENGINEER

DRAWN BY: W.R.V.	CHECKED BY: W.W.S.
PLOT: 1=2	DATE: 04/04/09

NO.	REVISION DESCRIPTION	BY	DATE

DRAWING TITLE
LIFT & SLIDE BRONZE CLAD SLIDING GLASS IMPACT DOORS

MANUFACTURER
PEETZ WINDOWS & DOORS
15951 S.W. 41ST STREET; SUITE 150
WESTON, FL 33331
954-659-3887

CONSULTANTS
W. W. SCHAEFER ENGINEERING & CONSULTING, P.A. (CA 6809)
7480 150TH COURT NORTH
PALM BEACH GARDENS, FL 33418
PHONE: 561-744-3424

CERTIFICATION
NOV 06 2013
WARREN W. SCHAEFER, P.E.
P.E. NO. 44135

DRAWING NO. 1632
REV. B
SHEET NO. 32 OF 38

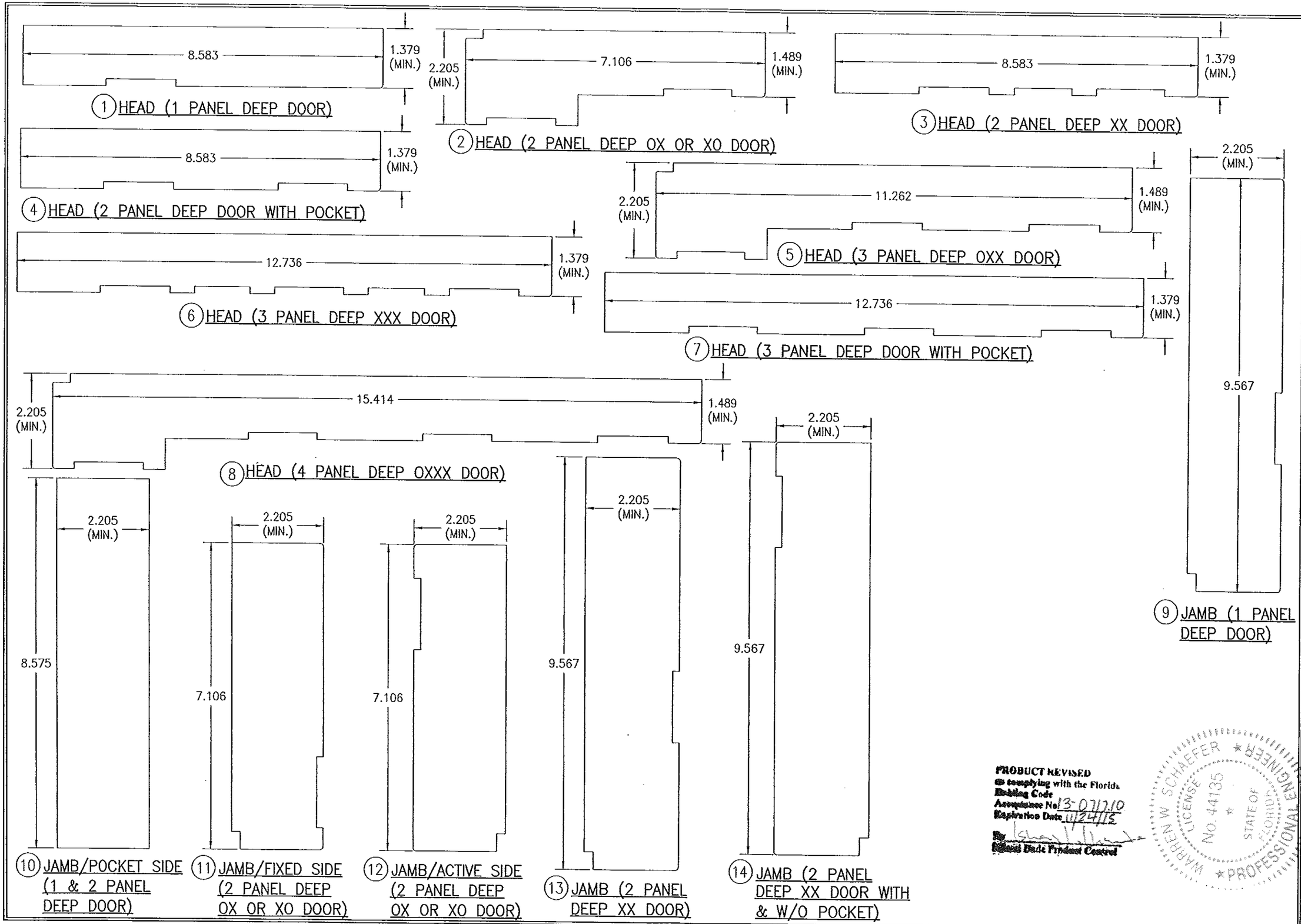

PRODUCT REVISED
to complying with the Florida
Building Code
Acceptance No 13-0717.10
Expiration Date 11/24/15
By
Product Data Program Control

WARREN W. SCHAEFER
LICENSE No. 44135
STATE OF FLORIDA
PROFESSIONAL ENGINEER

DRAWN BY: W.R.M.	CHECKED BY: W.W.S.
PLOT: 1=24	DATE: 04/04/09

NO.	REVISION DESCRIPTION	BY	DATE

DRAWING TITLE
LIFT & SLIDE BRONZE CLAD SLIDING GLASS IMPACT DOORS

MANUFACTURER
PEETZ WINDOWS & DOORS
15951 S.W. 41ST STREET, SUITE 150
WESTON, FL 33331
954-659-3887

CONSULTANTS
W. W. SCHAEFER ENGINEERING & CONSULTING, P.A. (CA 6809)
7480 150TH COURT NORTH
PALM BEACH GARDENS, FL 33418
PHONE: 561-744-3424

CERTIFICATION
NOV 06 2013
WARREN W. SCHAEFER, P.E.
P.E. NO. 44135

DRAWING NO. 1632
REV. B
SHEET NO. 34 OF 38

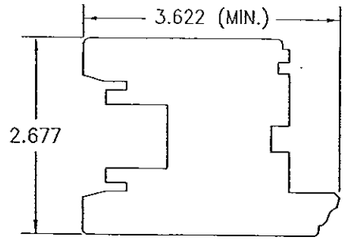

(29) STILE (ACTIVE PANEL)

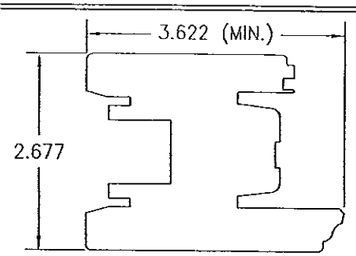

(30) MEETING STILE

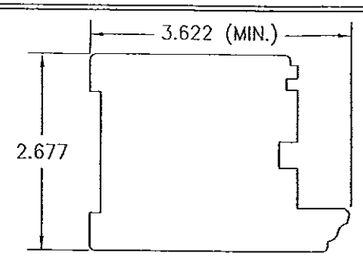

(32) STILE (FIXED PANEL)

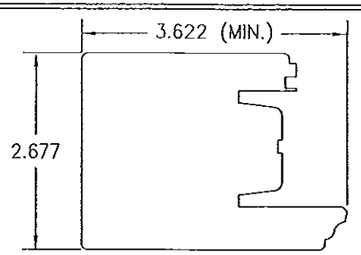

(33) INTERLOCK STILE

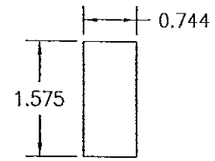

(35) SILL BASE EXTENSION (1 PANEL DEEP WITH POCKET)

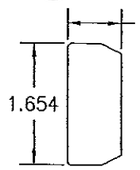

(36) LOCKING BOLT BLOCK

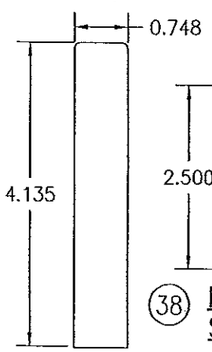

(37) POCKET COVER

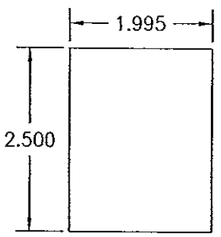

(38) POCKET COVER SUPPORT BLOCK

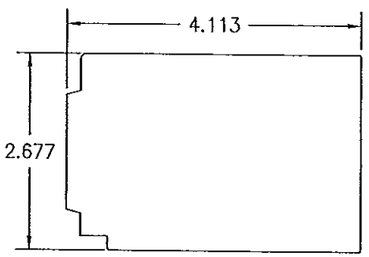

(39) POCKET STILE EXTENSION

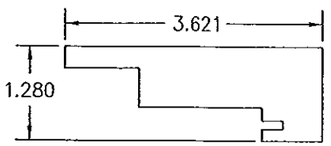

(40) ACTIVE INTERLOCK POCKET ASTRAGAL

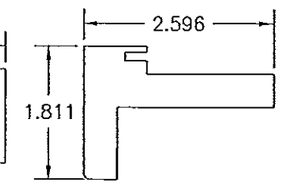

(41) FIXED INTERLOCK POCKET ASTRAGAL

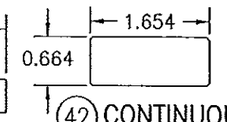

(42) CONTINUOUS KEY

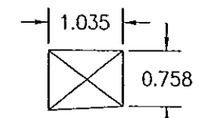

(43) FIXED SILL BLOCKING

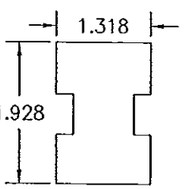

(44) TRACK BRIDGING

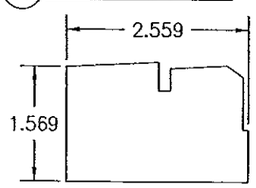

(45) SILL BASE EXTENSION (2 PANEL DEEP DOOR WITH POCKET)

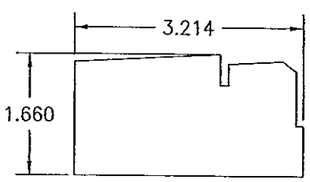

(46) SILL BASE EXTENSION (3 PANEL DEEP DOOR WITH POCKET)

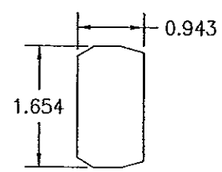

(47) DECORATIVE CAP

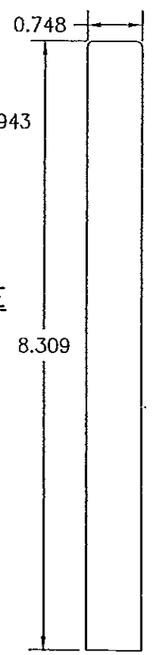

(48) POCKET COVER

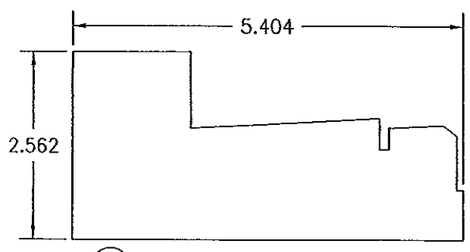

(49) SILL BASE EXTENSION (4 PANEL DEEP DOOR)

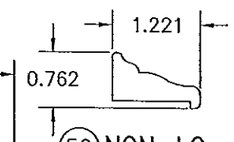

(50) NON-I.G. GLAZING BEAD

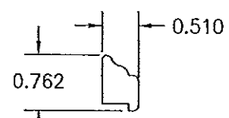

(51) I.G. GLAZING BEAD

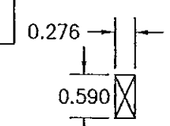

(52) SILL RAIL CLADDING BLOCK

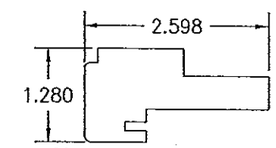

(53) ACTIVE INTERLOCK ASTRAGAL

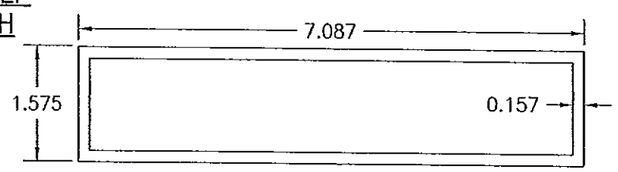

(57) SILL BASE (3 & 4 PANEL DEEP DOORS)

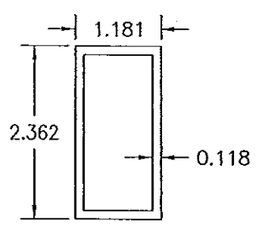

(60) INTERIOR SILL BASE EXTENSION (3 & 4 PANEL DEEP DOORS)

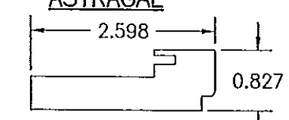

(54) ACTIVE INTERLOCK ASTRAGAL

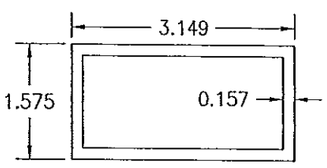

(55) SILL BASE (1 PANEL DEEP DOOR)

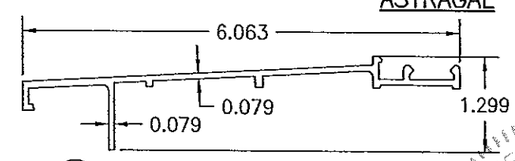

(61) THRESHOLD COVER (1 & 2 PANEL DEEP DOORS)

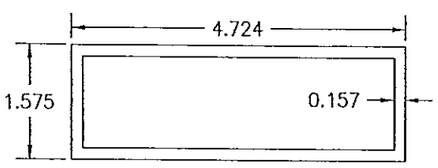

(56) SILL BASE (2 PANEL DEEP DOOR)

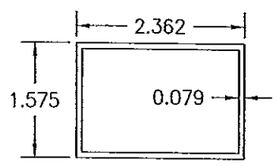

(58) SILL BASE EXTENSION (1 PANEL DEEP DOOR)

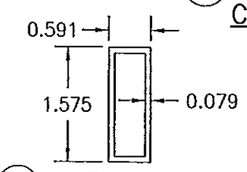

(59) EXTERIOR SILL BASE EXTENSION (2, 3 & 4 PANEL DEEP DOORS)

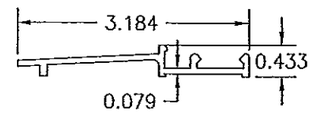

(62) THRESHOLD COVER (1 PANEL DEEP DOORS WITH POCKET)

PRODUCT REVIEWED
as complying with the Florida
Building Code
Acceptance No. 13-0717.10
Expiration Date 11/24/15
By
Miami Dade Product Control

WARREN W. SCHAEFER LICENSE NO. 44135 STATE OF FLORIDA PROFESSIONAL ENGINEER

NO.	REVISION DESCRIPTION	BY	DATE

DRAWN BY: W.R.M. | CHECKED BY: W.W.S.
PLOT: 1=24 | DATE: 04/04/09

DRAWING TITLE
LIFT & SLIDE BRONZE CLAD SLIDING GLASS IMPACT DOORS

MANUFACTURER
PEETZ WINDOWS & DOORS
15951 S.W. 41ST STREET; SUITE 150
WESTON, FL 33331
954-659-3887

CONSULTANTS
W. W. SCHAEFER ENGINEERING & CONSULTING, P.A. (CA 6809)
7480 150TH COURT NORTH
PALM BEACH GARDENS, FL 33418
PHONE: 561-744-3424

CERTIFICATION
NOV 06 2013
WARREN W. SCHAEFER, P.E.
P.E. NO. 44135

DRAWING NO. 1632 | REV. B
SHEET NO. 36 OF 38

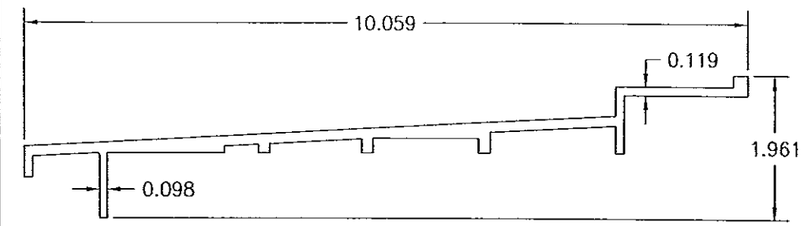

63 THRESHOLD COVER (3 & 4 PANEL DEEP DOORS)

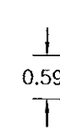

64 GUIDING RAIL SUPPORT BRACKET

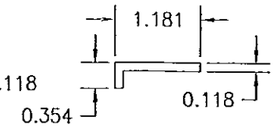

65 GUIDING RAIL SUPPORT BRACKET

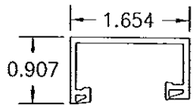

66 SILL TRACK (FIXED PANEL)

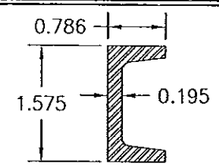

67 STILE REINFORCEMENT

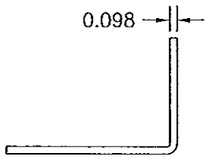

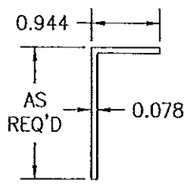

120 POCKET INTERLOCK SKIN CLADDING

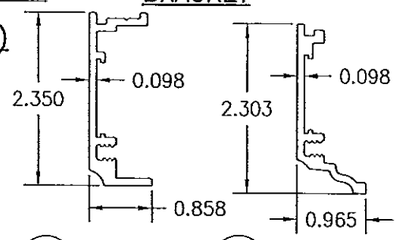

112 FRAME CLADDING

113 ACTIVE TOP RAIL & BOTTOM RAIL EXTENSION CLADDING

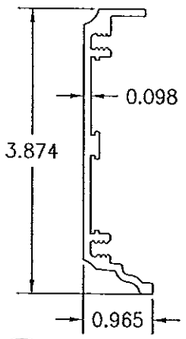

114 FIXED TOP RAIL & STILE CLADDING

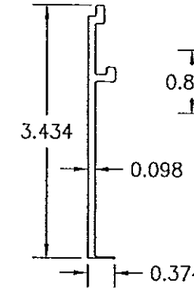

115 BOTTOM RAIL CLADDING

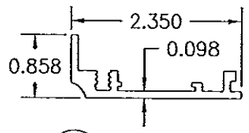

116 POCKET CLADDING

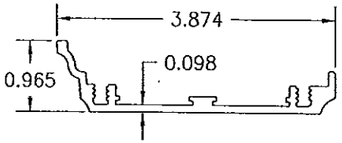

117 POCKET STILE CLADDING

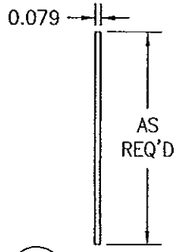

118 JAMB SKIN CLADDING

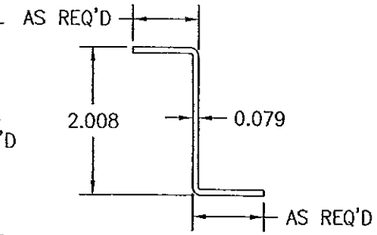

119 HEAD SKIN CLADDING

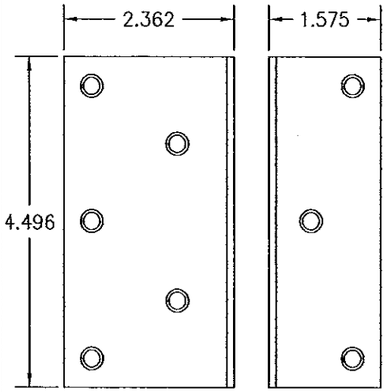

68 MOUNTING CLIP

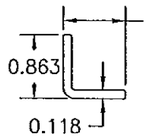

121 CORNER STILE SKIN CLADDING

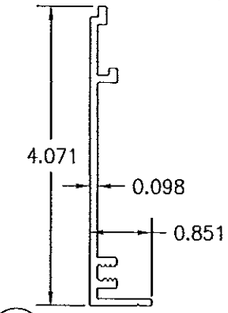

122 BOTTOM RAIL CLADDING

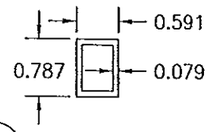

138 INTERIOR AND EXTERIOR TUBE

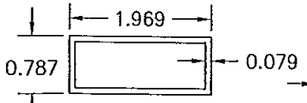

139 INTERMEDIATE TUBE

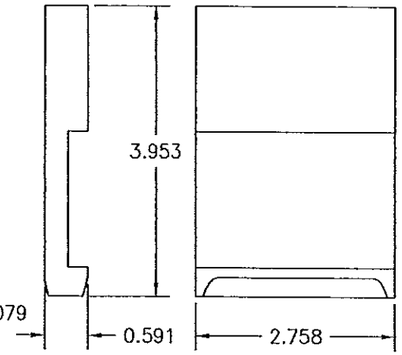

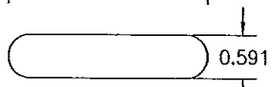

140 SILL LOCK BOLT

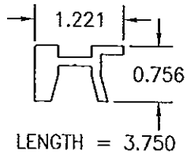

141 SADDLE BASE

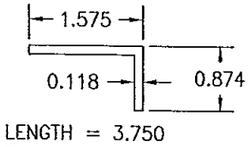

144 SADDLE COVER

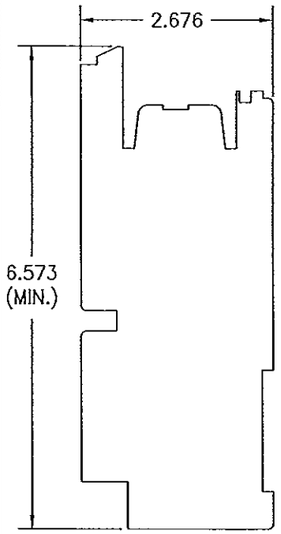

69 CORNER STILE

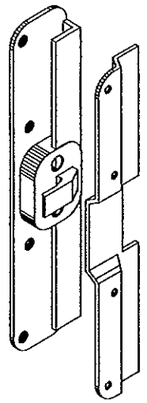

84 INTERLOCK CLIP

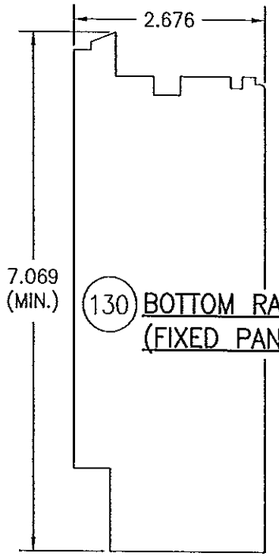

130 BOTTOM RAIL (FIXED PANEL)

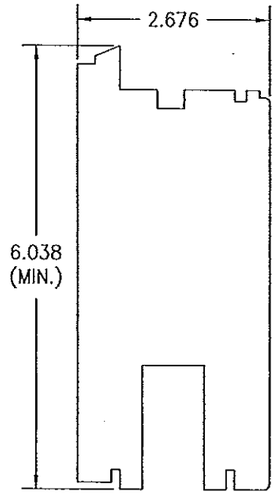

131 BOTTOM RAIL (ACTIVE PANEL)

PRODUCT REVISED
to comply with the Florida
Building Code
Acceptance No. 13-0717.10
Expiration Date 11/24/15
By
Miami Dade Product Control

WARREN W. SCHAEFER LICENSE No 44135 STATE OF FLORIDA PROFESSIONAL ENGINEER

DRAWN BY: W.R.M.	CHECKED BY: W.W.S.
PLOT: 1=24	DATE: 04/04/09

NO.	REVISION DESCRIPTION	BY	DATE

DRAWING TITLE
LIFT & SLIDE BRONZE CLAD SLIDING GLASS IMPACT DOORS

MANUFACTURER
PEETZ WINDOWS & DOORS
15951 S.W. 41ST STREET; SUITE 150
WESTON, FL 33331
954-659-3887

CONSULTANTS
W. W. SCHAEFER ENGINEERING & CONSULTING, P.A. (CA 6809)
7480 150TH COURT NORTH
PALM BEACH GARDENS, FL 33418
PHONE: 561-744-3424

CERTIFICATION
NOV 06 2013
WARREN W. SCHAEFER, P.E.
P.E. NO. 44135

DRAWING NO. 1632
REV. B
SHEET NO. 37 OF 38

ITEM #	ITEM DESCRIPTION	MANUFACTURER/NOTES
	WOOD & MISCELLANEOUS PARTS	
1	HEAD (1 PANEL DEEP DOOR)	MAHOGANY
2	HEAD (2 PANEL DEEP OX OR XO DOOR)	MAHOGANY
3	HEAD (2 PANEL DEEP XX DOOR)	MAHOGANY
4	HEAD (2 PANEL DEEP DOOR WITH POCKET)	MAHOGANY
5	HEAD (3 PANEL DEEP OXX DOOR)	MAHOGANY
6	HEAD (2 PANEL DEEP XXX DOOR)	MAHOGANY
7	HEAD (2 PANEL DEEP DOOR WITH POCKET)	MAHOGANY
8	HEAD (4 PANEL DEEP OXXX DOOR)	MAHOGANY
9	JAMB (1 PANEL DEEP DOOR)	MAHOGANY
10	JAMB/POCKET SIDE (1 & 2 PANEL DEEP DOOR)	MAHOGANY
11	JAMB/FIXED SIDE (2 PANEL DEEP OX OR XO DOOR)	MAHOGANY
12	JAMB/ACTIVE SIDE (2 PANEL DEEP OX OR XO DOOR)	MAHOGANY
13	JAMB (2 PANEL DEEP XX DOOR)	MAHOGANY
14	JAMB (2 PANEL DEEP XX DOOR WITH POCKET)	MAHOGANY
15	JAMB/FIXED SIDE (3 PANEL DEEP OXX DOOR)	MAHOGANY
16	JAMB/ACTIVE SIDE (3 PANEL DEEP OXX DOOR)	MAHOGANY
17	JAMB (3 PANEL DEEP XXX DOOR)	MAHOGANY
18	JAMB/ACTIVE SIDE (3 PANEL DEEP XXX DOOR WITH POCKET)	MAHOGANY
19	JAMB/POCKET SIDE (3 PANEL DEEP XXX DOOR WITH POCKET)	MAHOGANY
20	JAMB/FIXED SIDE (4 PANEL DEEP OXXX DOOR WITH POCKET)	MAHOGANY
21	JAMB/ACTIVE SIDE (4 PANEL DEEP OXXX DOOR WITH POCKET)	MAHOGANY
22	HEAD EXTENSION	MAHOGANY
23	HEAD FILLER BLOCK (EXTERIOR)	MAHOGANY
24	HEAD FILLER BLOCK (INTERMEDIATE)	MAHOGANY
25	TOP RAIL (ACTIVE PANEL)	MAHOGANY
26	TOP RAIL (FIXED PANEL)	MAHOGANY
27	BOTTOM RAIL (ACTIVE PANEL)	MAHOGANY
28	BOTTOM RAIL (FIXED PANEL)	MAHOGANY
29	STILE (ACTIVE PANEL)	MAHOGANY
30	MEETING STILE	MAHOGANY
32	STILE (FIXED PANEL)	MAHOGANY
33	INTERLOCK STILE	MAHOGANY
34	MIN. 1" THICK POCKET COVER (OVERALL SIZE PER POCKET REQUIREMENTS)	PLYWOOD
35	SILL BASE EXTENSION (1 PANEL DEEP WITH POCKET)	MAHOGANY
36	LOCKING BOLT BLOCK	MAHOGANY
37	POCKET COVER	MAHOGANY
38	POCKET COVER SUPPORT BLOCK	MAHOGANY
39	POCKET STILE EXTENSION	MAHOGANY
40	ACTIVE INTERLOCK ASTRAGAL	MAHOGANY
41	FIXED INTERLOCK ASTRAGAL	MAHOGANY
42	CONTINUOUS KEY	MAHOGANY
43	FIXED SILL BLOCKING	MAHOGANY
44	TRACK BRIDGING	MAHOGANY
45	SILL BASE EXTENSION (2 PANEL DEEP DOOR WITH POCKET)	MAHOGANY
46	SILL BASE EXTENSION (3 PANEL DEEP DOOR WITH POCKET)	MAHOGANY
47	DECORATIVE CAP	MAHOGANY
48	POCKET COVER	MAHOGANY
49	SILL BASE EXTENSION (4 PANEL DEEP DOOR)	MAHOGANY
50	NON-I.G. GLAZING BEAD	MAHOGANY
51	I.G. GLAZING BEAD	MAHOGANY
52	SILL RAIL CLADDING BLOCK	MAHOGANY
53	ACTIVE INTERLOCK ASTRAGAL	MAHOGANY
54	ACTIVE INTERLOCK ASTRAGAL	MAHOGANY
55	SILL BASE (1 PANEL DEEP DOOR)	6063-T5 ALUMINUM
56	SILL BASE (2 PANEL DEEP DOOR)	6063-T5 ALUMINUM
57	SILL BASE (3 & 4 PANEL DEEP DOORS)	6063-T5 ALUMINUM

ITEM #	ITEM DESCRIPTION	MANUFACTURER/NOTES
	WOOD & MISCELLANEOUS PARTS	
58	SILL BASE EXTENSION (1 PANEL DEEP DOOR)	6063-T5 ALUMINUM
59	EXTERIOR SILL BASE EXTENSION (2, 3 & 4 PANEL DEEP DOORS)	6063-T5 ALUMINUM
60	INTERIOR SILL BASE EXTENSION (3 & 4 PANEL DEEP DOORS)	6063-T5 ALUMINUM
61	THRESHOLD COVER (1 & 2 PANEL DEEP DOORS)	BRONZE OR 6063-T5 ALUMINUM
62	THRESHOLD COVER (1 PANEL DEEP DOORS WITH POCKET)	BRONZE OR 6063-T5 ALUMINUM
63	THRESHOLD COVER (3 & 4 PANEL DEEP DOORS)	BRONZE OR 6063-T5 ALUMINUM
64	GUIDING RAIL SUPPORT BRACKET	6063-T5 ALUMINUM
65	GUIDING RAIL SUPPORT BRACKET	6063-T5 ALUMINUM
66	SILL TRACK (FIXED PANEL)	PVC
67	STILE REINFORCEMENT	GALVANIZED 34 KSI STEEL
68	MOUNTING CLIP	GALVANIZED 34 KSI STEEL
69	CORNER STILE	MAHOGANY
	HARDWARE	
70	BRASS ROLLER TRACK COVER	OTTO FUCHS #608410 (USE WITH ITEM #78)
71	BRASS ROLLER TRACK	OTTO FUCHS #608409
72	ALUMINUM ROLLER TRACK	SUPPLIED WITH GU OR FFI HARDWARE
73	ALUMINUM ROLLER TRACK	SUPPLIED WITH GU OR FFI HARDWARE
74	ALUMINUM ROLLER TRACK	SUPPLIED WITH GU OR FFI HARDWARE
75	2" LONG ROLLER TRACK CONNECTOR	WITHIN 3" OF ENDS & MAX. 12" O.C.
76	MALE GUIDING RAIL	GU #740
77	INTERMEDIATE GUIDING RAIL	GU #741
78	LIFT AND SLIDE DOOR HARDWARE	FFI #255JH OR GU #934
79	LIFT AND SLIDE DOOR HARDWARE	HAUTAU HS-300-E OR HS-300
80	HANDLE/GRIP PULL	AS REQUIRED TO OPERATE LOCK/LIFT SLIDE SYSTEM
81	BUMPER	GU, FFI OR HAUTAU
82	STOPPER	GU, FFI OR HAUTAU
83	LOCKING BOLT	GU OR FFI #LAR 2500012 OR HAUTAU #184695
84	INTERLOCK CLIP	GU OR FFI #K-16606-00-01 SECURED TO EACH STILE WITH 2 NO. 14 X 1 3/8" WOOD SCREWS
	SEALS & SEALANTS	
86	SEALING BRIDGE	PEETZ (SCREWED TO FRAME W/#6X7/8 SMS)
87	RUBBER SEALING BRIDGE BY GUMMI BUSH	(GLUED ONTO INTERLOCK ASTRAGAL WITH CRAZY GLUE)
88	SASH GASKET	SUPPLIED WITH GU OR FFI
89	SASH GASKET	LOCKING HARDWARE PACKAGE
90	SOFT RUBBER SEALING BRIDGE	GU/FFI (SCREWED TO FRAME W/#6X7/8 SMS)
91	SOFT RUBBER SEALING BRIDGE	GU/FFI (SCREWED TO FRAME W/#6X7/8 SMS)
92	SOFT RUBBER SEALING PIECE	GU/FFI (GLUED ONTO RUNNING RAIL)
93	SOFT RUBBER SEALING PIECE	GU/FFI (GLUED ONTO RUNNING RAIL)
94	3/8" X 3/16" PRECOMPRESSED TAPE	AS REQ'D
95	SASH GASKET	SCHLEGAL #QL3011
	FASTENERS	
96	NO. 8 X 1 3/4" WOOD SCREW	WITHIN 6" OF ENDS & 24" MAX. O.C.
97	NO. 8 X 1 3/8" S.S. WOOD SCREW	WITHIN 4" OF CORNERS & 12" MAX. O.C.
98	NO. 8 X 1 3/8" S.S. WOOD SCREW	WITHIN 2" OF CORNERS & 8" MAX. O.C.
99	NO. 8 X 2" S.S. SMS SCREW	WITHIN 4" OF CORNERS & 12" MAX. O.C.
100	NO. 12 X 2 3/4" S.S. WOOD SCREW	WITHIN 4" OF CORNERS & 6" MAX. O.C.
101	NO. 12 S.S. SMS SCREW (LENGTH AS REQ'D TO PENETRATE ALUMINUM SILL BASE)	WITHIN 4" OF CORNERS & 6" MAX. O.C.
102	NO. 8 X 1 3/4" S.S. SCREW	WITHIN 6" OF CORNERS & 17" MAX. O.C.
103	NO. 14 X 3 3/4" WOOD SCREW	WITHIN 4" OF CORNERS & 14" MAX. O.C.
104	NO. 14 X 5" WOOD SCREW	WITHIN 4" OF CORNERS & 14" MAX. O.C.
105	NO. 14 X 4 3/4" WOOD SCREW	WITHIN 5 1/2" OF CORNERS & 10" MAX. O.C.
106	18 GA. X 1 1/4" GALV. CURVED NAIL	WITHIN 10" OF CORNERS & 20" MAX. O.C.
107	NO. 6 X 5/8" WOOD SCREW	WITHIN 4 OF CORNERS & 20" MAX. O.C.
108	NO. 12 X 7/8" SELF TAPPING SCREW	WITHIN 4 OF CORNERS & 14" MAX. O.C.
109	3/16" X 1 9/16 SELF TAP/DRILLING SCREW	2 PER TRACK CONNECTOR
110	NO. 8 X 2 3/4" S.S. SMS SCREW	WITHIN 4" OF CORNERS & 12" MAX. O.C.
111	m4 X 1 3/8" MACHINE SCREW & NUT	WITHIN 4" OF CORNERS & 12" MAX. O.C.

ITEM #	ITEM DESCRIPTION	MANUFACTURER/NOTES
	CLAD PARTS	
112	SILL BASE (1 PANEL DEEP DOOR)	BRONZE OR 6063-T5 ALUMINUM
113	SILL BASE (2 PANEL DEEP DOOR)	BRONZE OR 6063-T5 ALUMINUM
114	SILL BASE (3 & 4 PANEL DEEP DOORS)	BRONZE OR 6063-T5 ALUMINUM
115	SILL BASE EXTENSION (1 PANEL DEEP DOOR)	BRONZE OR 6063-T5 ALUMINUM
116	SILL BASE (1 PANEL DEEP DOOR)	BRONZE OR 6063-T5 ALUMINUM
117	SILL BASE (2 PANEL DEEP DOOR)	BRONZE OR 6063-T5 ALUMINUM
118	SILL BASE (3 & 4 PANEL DEEP DOORS)	BRONZE OR 6063-T5 ALUMINUM
119	SILL BASE EXTENSION (1 PANEL DEEP DOOR)	BRONZE OR 6063-T5 ALUMINUM
120	SILL BASE EXTENSION (1 PANEL DEEP DOOR)	BRONZE OR 6063-T5 ALUMINUM
121	CORNER STILE SKIN CLADDING	BRONZE OR 6063-T5 ALUMINUM
122	BOTTOM RAIL CLADDING	BRONZE OR 6063-T5 ALUMINUM
	ALTERNATE FLUSH MOUNT SILL PARTS	
130	BOTTOM RAIL (FIXED PANEL)	MAHOGANY
131	BOTTOM RAIL (ACTIVE PANEL)	MAHOGANY
136	0.09375" THICK PLATE	6060-T66 ALUMINUM
138	INTERIOR AND EXTERIOR TUBE	6060-T66 ALUMINUM
139	INTERMEDIATE TUBE	6060-T66 ALUMINUM
140	SILL LOCK BOLT (2 PER ACTIVE PANEL)	6060-T66 ALUMINUM
141	SADDLE BASE (SCREWED TO SILL WITH 1 m5 X 30 mm SCREW)	BRONZE
144	SADDLE COVER (AFFIXED TO ITEM #131 WITH SIKASIL 184 N-PLUS SILICONE SEALANT BY SIKA	BRONZE
	ALTERNATE FLUSH MOUNT SILL FASTENERS	
150	m5 X 15 SCREWS	WITHIN 2" OF ENDS & 12" MAX. O.C.
151	NO. 12 X 4" S.S. SMS SCREW	WITHIN 4" OF CORNERS & 6" MAX. O.C.

NOTE: WOOD USED IN TESTING WAS MAHOGANY WITH A SPECIFIC GRAVITY OF G = 0.46 AND A MODULUS OF ELASTICITY OF E = 1,500,000 PSI. OTHER WOOD SPECIES APPLICABLE FOR USE WITH THIS PRODUCT ARE THOSE WITH A SPECIFIC GRAVITY OF 0.46 AND MODULUS OF ELASTICITY OF 1,500,000 PSI OR GREATER. ALL WOOD IS MINIMUM GRADE 2 MILLED BY PEETZ WINDOWS & DOORS TO SELECT.

PRODUCT REVISED
Accordance with the Florida
Building Code
Acceptance No. 13-0717.10
Expiration Date Nov 20, 2015
By Shaul Chaul
Miami Dade Product Control

WARREN W. SCHAEFER LICENSE No 44135 STATE OF FLORIDA PROFESSIONAL ENGINEER

DRAWN BY: W.R.M.	CHECKED BY: W.W.S.
PLOT: 1=24	DATE: 04/04/09

NO.	REVISION DESCRIPTION	BY	DATE

DRAWING TITLE
LIFT & SLIDE BRONZE CLAD SLIDING GLASS IMPACT DOORS

MANUFACTURER
PEETZ WINDOWS & DOORS
15951 S.W. 41ST STREET; SUITE 150
WESTON, FL 33331
954-659-3887

CONSULTANTS
W. W. SCHAEFER ENGINEERING & CONSULTING, P.A. (CA 6809)
7480 150TH COURT NORTH
PALM BEACH GARDENS, FL 33418
PHONE: 561-744-3424

CERTIFICATION
NOV 06 2013
WARREN W. SCHAEFER, P.E.
P.E. NO. 44135

DRAWING NO. 1632
REV. B
SHEET NO. 38 OF 38