MIAMI-DADE COUNTY
PRODUCT CONTROL SECTION
11805 SW 26 Street, Room 208
Miami, Florida 33175-2474
T (786) 315-2590 F (786) 315-2599
www.miamidade.gov/economy

DEPARTMENT OF REGULATORY AND ECONOMIC RESOURCES (RER)
BOARD AND CODE ADMINISTRATION DIVISION

NOTICE OF ACCEPTANCE (NOA)

Ruskin Company
3900 Dr. Greaves Road.
Grandview, MO 64030

SCOPE:

This NOA is being issued under the applicable rules and regulations governing the use of construction materials. The documentation submitted has been reviewed and accepted by Miami-Dade County RER-Product Control Section to be used in Miami Dade County and other areas where allowed by the Authority Having Jurisdiction (AHJ).

This NOA shall not be valid after the expiration date stated below. The Miami-Dade County Product Control Section (In Miami Dade County) and/or the AHJ (in areas other than Miami Dade County) reserve the right to have this product or material tested for quality assurance purposes. If this product or material fails to perform in the accepted manner, the manufacturer will incur the expense of such testing and the AHJ may immediately revoke, modify, or suspend the use of such product or material within their jurisdiction. RER reserves the right to revoke this acceptance, if it is determined by Miami-Dade County Product Control Section that this product or material fails to meet the requirements of the applicable building code.

This product is approved as described herein, and has been designed to comply with the Florida Building Code, including the High Velocity Hurricane Zone.

DESCRIPTION: Model PHB6625D Aluminum Penthouse Louver System

APPROVAL DOCUMENT: Drawing No. **60-022015-00B**, titled "PHB6625D Penthouse", sheets 1 through 13 of 13, dated 07/07/2006, with revision G dated 07/19/2013, prepared by Ruskin Company, signed and sealed by Daniel J. Rau, P.E., bearing the Miami-Dade County Product Control revision stamp with the Notice of Acceptance number and expiration date by the Miami-Dade County Product Control Section.

MISSILE IMPACT RATING: Large and Small Missile Impact Resistant

LABELING: Each unit shall bear a permanent label with the manufacturer's name or logo, Geneva, AL, model/series, and following statement: "Miami-Dade County Product Control Approved", unless otherwise noted herein.

RENEWAL of this NOA shall be considered after a renewal application has been filed and there has been no change in the applicable building code negatively affecting the performance of this product.

TERMINATION of this NOA will occur after the expiration date or if there has been a revision or change in the materials, use, and/or manufacture of the product or process. Misuse of this NOA as an endorsement of any product, for sales, advertising or any other purposes shall automatically terminate this NOA. Failure to comply with any section of this NOA shall be cause for termination and removal of NOA.

ADVERTISEMENT: The NOA number preceded by the words Miami-Dade County, Florida, and followed by the expiration date may be displayed in advertising literature. If any portion of the NOA is displayed, then it shall be done in its entirety.

INSPECTION: A copy of this entire NOA shall be provided to the user by the manufacturer or its distributors and shall be available for inspection at the job site at the request of the Building Official.

This NOA **revises NOA # 13-0521.07** and consists of this page 1 and evidence page E-1, as well as approval document mentioned above.

The submitted documentation was reviewed by **Carlos M. Utrera, P.E.**

MIAMI-DADE COUNTY APPROVED

09/16/2013

NOTICE OF ACCEPTANCE: EVIDENCE SUBMITTED

A. DRAWINGS

1. Drawing No. **60-022015-00B**, titled "PHB6625D Penthouse", sheets 1 through 13 of 13, dated 07/07/2006, with revision G dated 07/19/2013, prepared by Ruskin Company, signed and sealed by Daniel J. Rau, P.E.

B. TESTS *"Submitted under NOA # 08-1003.05"*

1. Test reports on 1) Uniform Static Air Pressure Test, Loading per FBC TAS 202-94
   2) Large Missile Impact Test per FBC, TAS 201-94
   3) Cyclic Wind Pressure Loading per FBC, TAS 203-94

   along with marked-up drawings and installation diagram of Series/Model PHB6625D Penthouse, prepared by Architectural Testing, Inc., Test Report No. **73628.01-401-18**, dated 09/05/2007, signed and sealed by Joseph A. Reed, P.E.

C. CALCULATIONS

1. Head, jamb, sill and HHBS components moment of inertia and section modulus calculations prepared by Ruskin Company, dated 09/19/2013, signed and sealed by Daniel J. Rau, P.E.

   "Submitted under NOA # 08-1003.05"
2. Anchorage, stress and deflection calculations, prepared by Ruskin Company, dated 09/12/2008, signed and sealed by Daniel J. Rau, P.E.

D. QUALITY ASSURANCE

1. Miami-Dade Department of Regulatory and Economic Resources (RER)

E. MATERIAL CERTIFICATIONS

1. None.

F. STATEMENTS *"Submitted under NOA # 13-0521.07"*

1. Statement letter of code conformance to 2010 FBC issued by Ruskin Company, dated 05/10/2013, signed and sealed by Daniel J. Rau, P.E.
2. No financial interest letter issued by Ruskin Company, dated 05/10/2013, signed and sealed by Daniel J. Rau, P.E.

   "Submitted under NOA # 08-1003.05"
3. Test code compliance letter issued by Architectural Testing, Inc., dated 09/04/2007, signed and sealed by Joseph A. Reed, P.E.

09/16/2013

Carlos M. Utrera, P.E.
Product Control Examiner
NOA No. 13-0730.04
Expiration Date: November 20, 2018
Approval Date: September 26, 2013

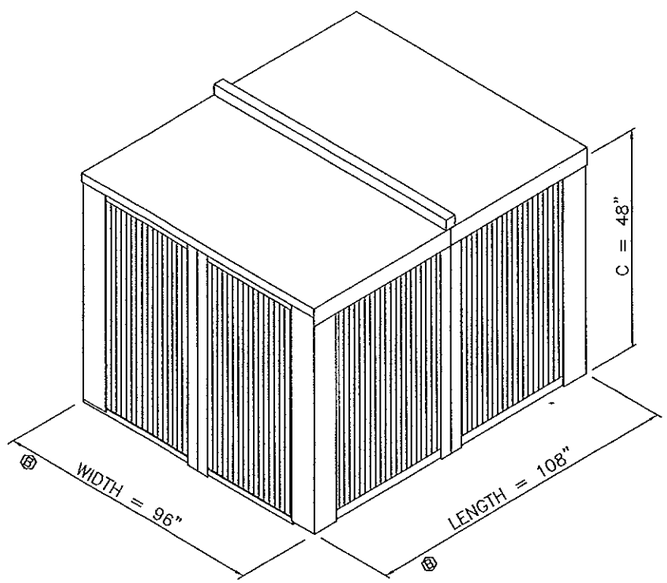

PENTHOUSE ISOMETRIC

FRAME
6063–T6 extruded aluminum with .095" nominal wall thickness. (G)
BLADES
6063–T5 extruded aluminum with .080" nominal wall thickness.
ROOF
.080 thick formed aluminum panels
SILL
.125" thick formed aluminum
FINISH
Mill: See note 8

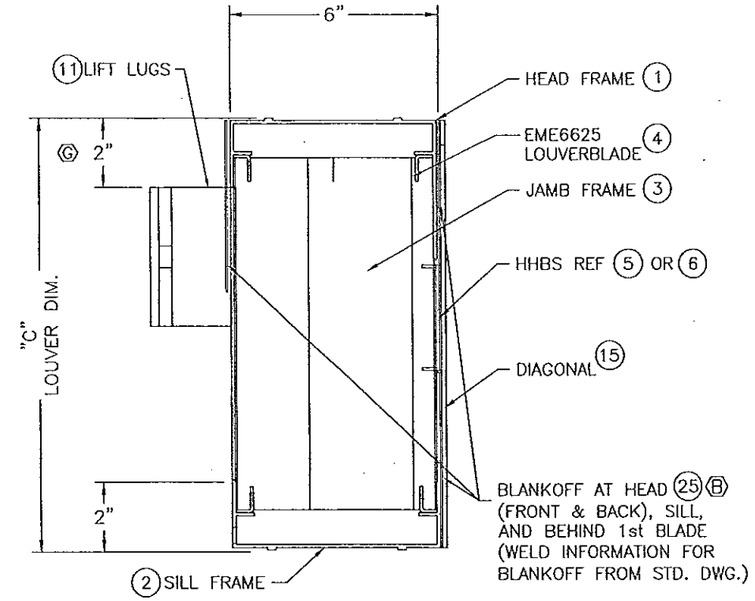

EME6625D LOUVER SECTION

DESIGN PRESSURE RATING
±110 PSF

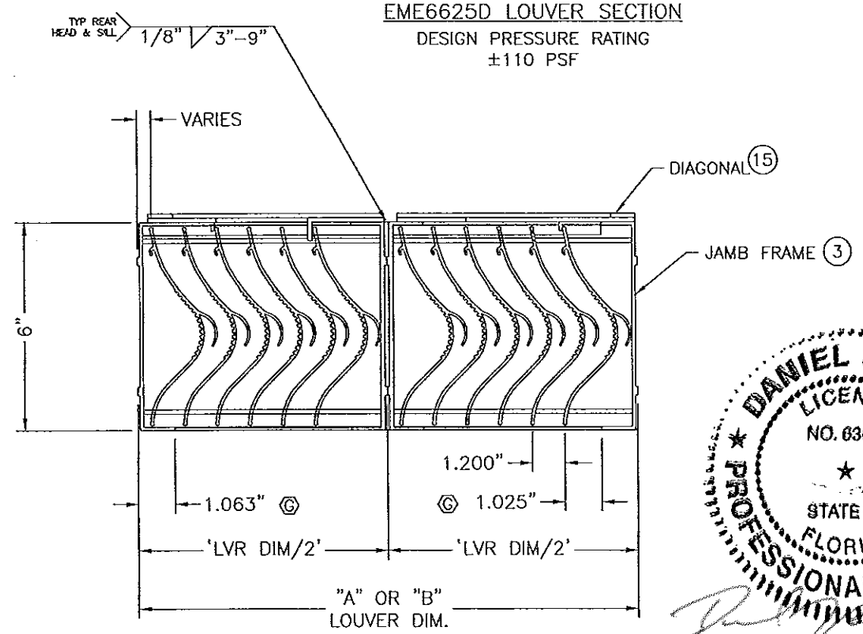

EME6625D PLANVIEW

DANIEL J. RAU
LICENSE
NO. 63636
STATE OF FLORIDA
PROFESSIONAL ENGINEER

7/22/13

NOTES:

1) DIMENSIONS SHOWN ARE ACTUAL LOUVER SIZE.

2) LOUVER DESIGN INCORPORATES STRUCTURAL SUPPORTS, ATTACHED TO REAR OF LOUVER TO WITHSTAND A WINDLOAD OF 110 PSF. REF SCHEDULE, ASSY, OR PLANVIEW FOR SIZE, QTY., & LOCATION. PERIMETER SUBSTRATE AND ATTACHMENT DESIGN IS NIRC

3) ⬭ INDICATES TAG: LETTER= ASSY #= SHIP SECTION.

4) B.O.D. = BLANK-OFF DIMENSION
F.L. = FRAME LENGTH
H.V.B.S. = HIDDEN VERTICAL BLADE SUPPORT
H.H.B.S. = HORZ HIDDEN BLADE SUPPORT
L.D. = LOUVER DIMENSION.
L.D.D. = LOUVER DOOR DIMENSION.
N.I.R.C. = NOT IN RUSKIN CONTRACT.
O.L.D. = OUT SIDE LOUVER DIMENSION.
O/C = ON CENTER
U.N.O. = UNLESS NOTED OTHERWISE
OPP = OPPOSITE.
R.L.D. = REMOVABLE LOUVER DIMENSION
R.O. = ROUGH OPENING.
SIM = SIMILAR
S.D. = SUB-FRAME DIMENSION.
S.S. = SHIP SECTION.
S.S.D. = SHIP SECTION DIMENSION
TYP = TYPICAL

5) SHOP DRAWINGS ARE PREPARED BASED ON INTERPRETATION OF PURCHASER'S ORDER AND/OR ARCHITECTS/ENGINEERS DRAWINGS AND SPECIFICATIONS. IT IS IMPORTANT THAT THE PURCHASER AND THE INSTALLATION CONTRACTOR REVIEW THESE DRAWINGS DIMENSIONALLY AND FUNCTIONALLY WITH RESPECT TO THE ARCHITECTS INTENT AND VERIFY SIZE, CONFIGURATION AND FIELD CONDITIONS PRIOR TO FABRICATION.

6) NOTCHING OF HVBS AROUND STRUCTURE AND/OR OBSTRUCTIONS IN THE FIELD, SHALL BE THE RESPONSIBILITY OF INSTALLATION CONTRACTOR. FIELD MODIFICATIONS OF LOUVER COMPONENTS SHALL BE REVIEWED AND APPROVED BY RUSKIN. IF CONTINUOUS ANGLES AND/OR EXTENDED SILLS ARE ORDERED NOTCHING OF THE ANGLES AND SILLS AROUND OBSTRUCTIONS (HVBS & FIELD CONDITIONS) SHALL BE THE RESPONSIBILITY OF THE INSTALLATION CONTRACTOR.

7) SEALING REQUIREMENTS AROUND LOUVERS, BETWEEN ADJOINING SHIP SECTIONS, SILLS, FRAMES AND WATERSTOPS FOR ARCHITECTURAL STYLE CONTINUOUS BLADE LOUVERS SHALL BE THE RESPONSIBILITY OF THE INSTALLATION CONTRACTOR.

8) IF BITUMINOUS COMPOUNDS ARE REQUIRED, BETWEEN DISSIMILAR METALS OR LOUVER AND OTHER SURFACES. IT IS THE RESPONSIBILITY OF THE INSTALLATION CONTRACTOR TO SUPPLY AND PROPERLY APPLY IT.

9) DETAIL BALLOON DESCRIPTION:

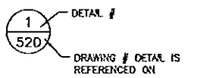

FOR OFFICE USE ONLY

PRODUCT REVISED
as complying with the Florida Building Code
Acceptance No 17-0730.04
Expiration Date 11/20/2018
By
Miami Dade Product Control

NOTE:
DESCRIPTION OF LINE ITEMS ON SHEET 6 (G)

ENGINEER OF RECORD	ENGINEERING DISCIPLINE	REGISTRATION NUMBER
DANIEL J. RAU	CIVIL ENGINEER	STATE OF FLORIDA #0063636

DWN. BY:	CHK'D. BY:	APPV'D. BY:	APPV'D. BY:
WRT	DJR	DJR	
DATE: 6/26/6	DATE: 7/7/6	DATE: 7/7/6	DATE:

SHEET 1 OF 13

CHANGE LETTER	REVISION DESCRIPTION	DWN. BY:	CHK'D. BY:	APPV'D. BY:	APPV'D. BY:	DATE
(G)	GENERAL REVISIONS	DRP	RKP	DJR		7/19/13
(F)	REVISED SILL PART NUMBER (SHEET 6) & SILL FRAME (SHEET 7)	DRP	RKP	DJR		5/10/13
(C)	REV'D TITLE BLOCK SPEC. BLK, RMVD SCRN, ADD DIAG	DWS	DJR	DJR		9/12/2006

RUSKIN Mfg Grandview, MO

PLOT SCALE: NONE

ECN 4621

TITLE: PHB6625D PENTHOUSE SPECS, NOTES AND DETAILS

DWG. NO. 60-022015-00B

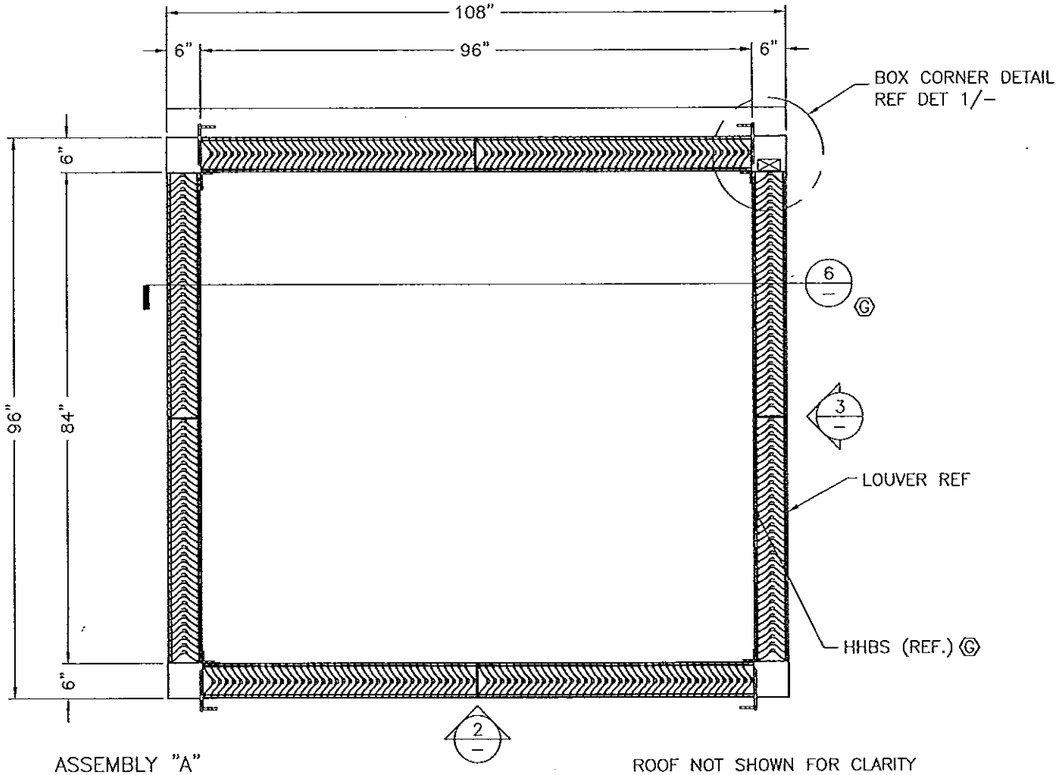

ASSEMBLY "A"

ROOF NOT SHOWN FOR CLARITY

N.T.S.
HEIGHT ('C') = 48" Ⓖ

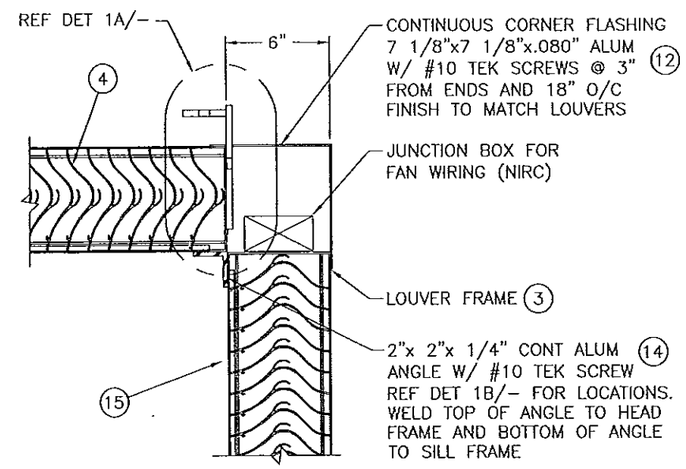

1/–
BOX CORNER DETAIL
NTS

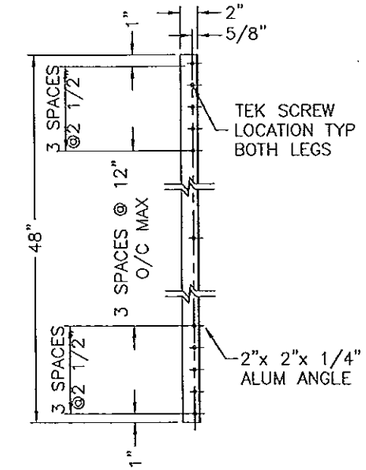

1B/–
ITEM 14 – LOUVER CORNER ANGLE
NTS

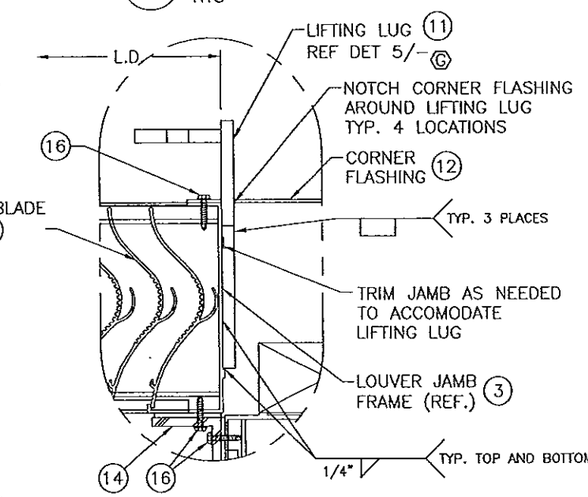

1A/–
LOUVER/CORNER FLASHING DETAIL
NTS

DANIEL J. RAU
LICENSE
NO. 63636
STATE OF
FLORIDA
PROFESSIONAL ENGINEER

7/22/13

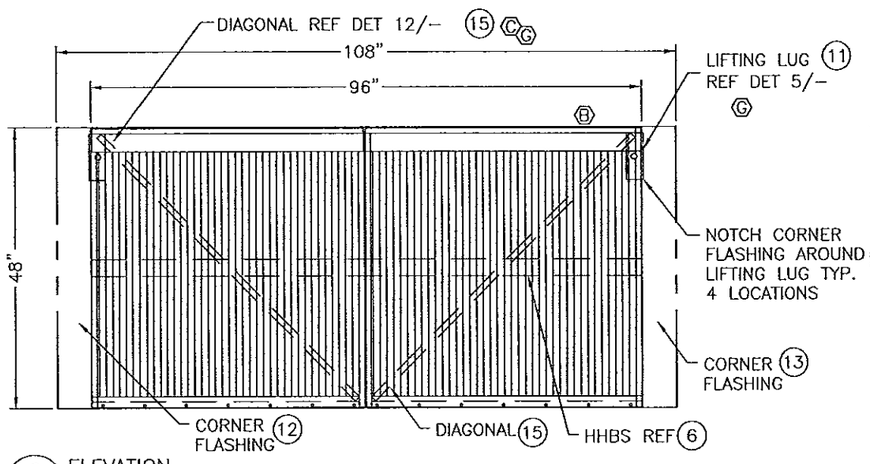

2/–
ELEVATION
N.T.S.

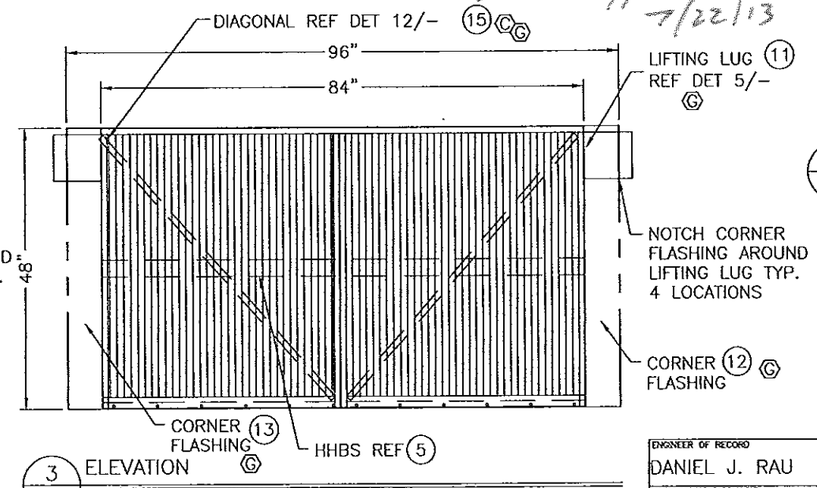

3/–
ELEVATION
N.T.S.

FOR OFFICE USE ONLY

PRODUCT REVISED
as complying with the Florida Building Code
Acceptance No 13-0730.04
Expiration Date 11/20/2018
By
Miami Dade Product Control

ENGINEER OF RECORD				
DANIEL J. RAU				
ENGINEERING DISCIPLINE				
CIVIL ENGINEER				
REGISTRATION NUMBER				
STATE OF FLORIDA #0063636				
DWN. BY: WRT	CHK. BY: DJR	APP'D. BY: DJR	APP'D. BY:	
DATE: 6/26/6	DATE: 7/7/6	DATE: 7/7/6	DATE:	
SHEET 2 OF 13				

CHANGE LETTER	REVISION DESCRIPTION	DWN. BY:	CHK'D. BY:	APP'D. BY:	APP'D. BY:	DATE
Ⓖ	GENERAL REVISIONS	DRP	RKP	DJR		7/19/13
Ⓕ	REVISED SILL PART NUMBER (SHEET 6) & SILL FRAME (SHEET 7)	DRP	RKP	DJR		5/10/13
Ⓒ	ADDED DIAGONAL	DWS	DJR	DJR		9/12/2008

RUSKIN Mfg Grandview, MO

PLOT SCALE: NONE

ECN 4621

TITLE: PHB6625D PENTHOUSE DETAILS

DWG. NO. 60-022015-00B

NOTE:
DESCRIPTION OF LINE ITEMS ON SHEET 6 Ⓖ

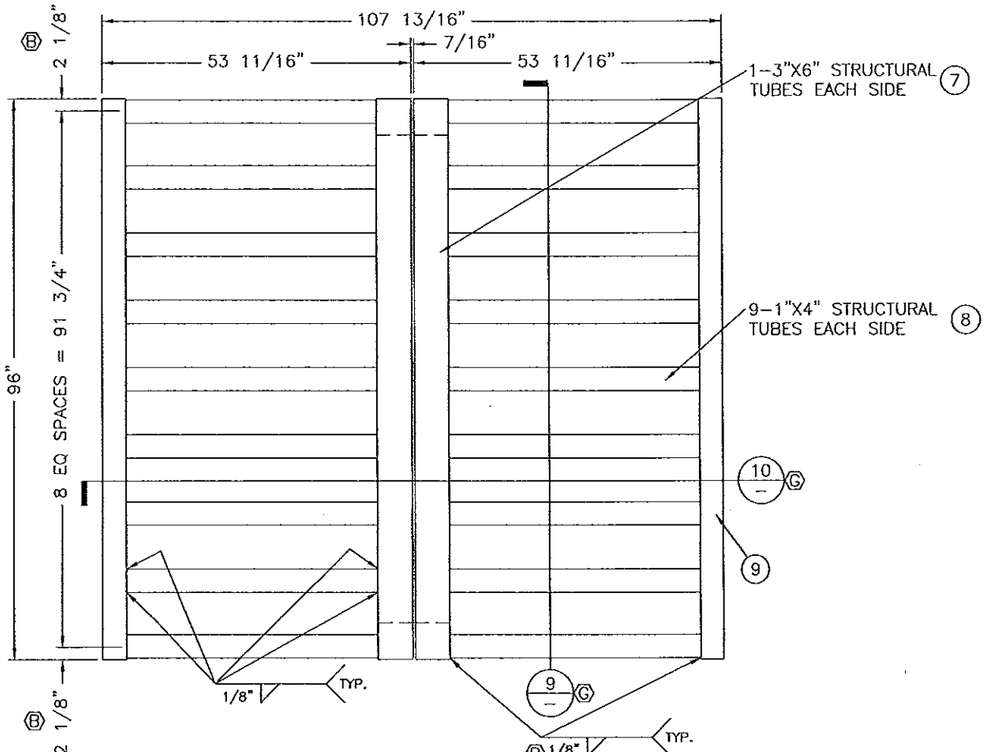

ROOF RAFTER PLAN VIEW 'A'
NTS

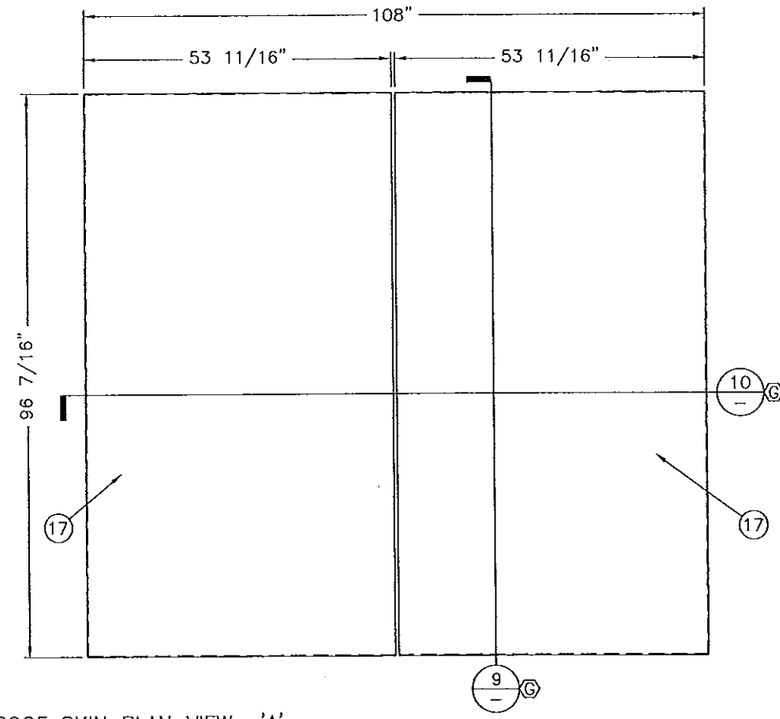

ROOF SKIN PLAN VIEW 'A'
NTS

FOR OFFICE USE ONLY

PRODUCT REVISED
as complying with the Florida Building Code
Acceptance No 13-0730.04
Expiration Date 11/20/2018
By
Miami Dade Product Control

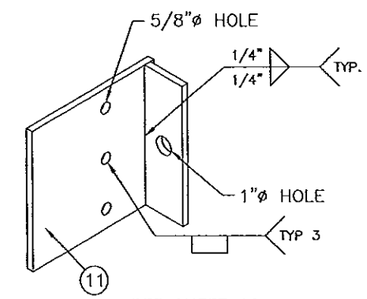

REF SHEET 10
FOR SPECIAL LIFTING
LUG INFO (G)

5 SPECIAL LIFTING LUG
NTS
MAT'L: .375" THICK ALUMINUM
FINISH TO MATCH LOUVER

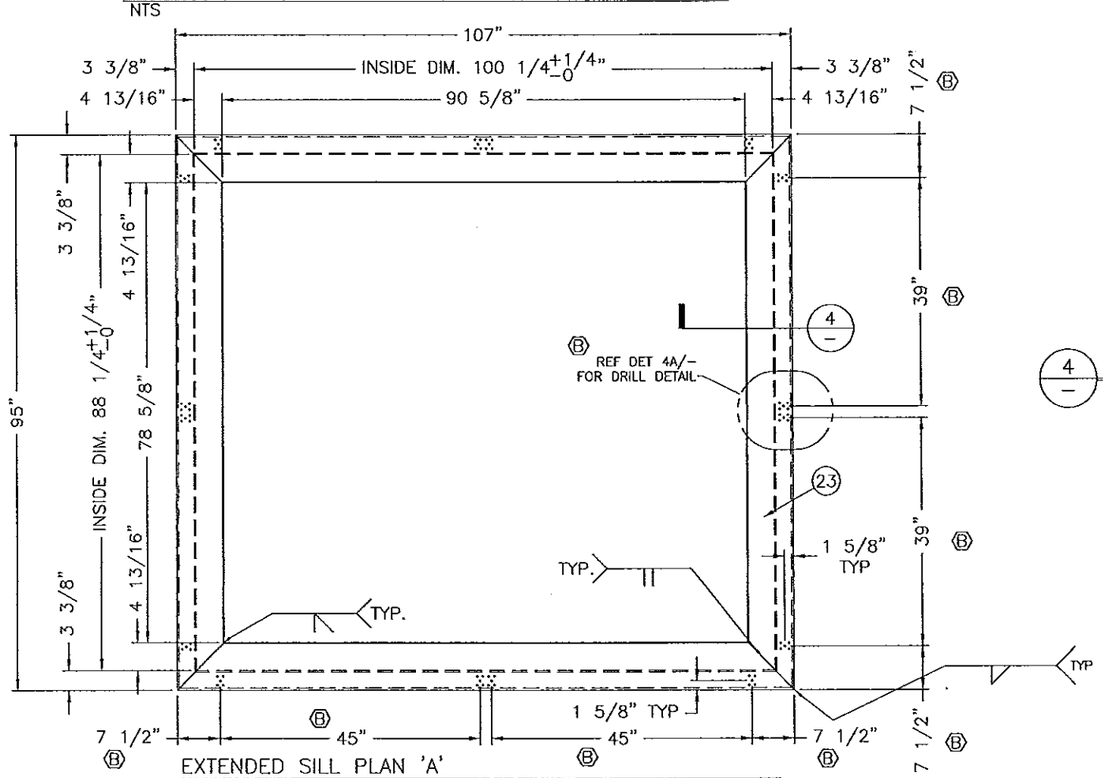

EXTENDED SILL PLAN 'A'
NTS

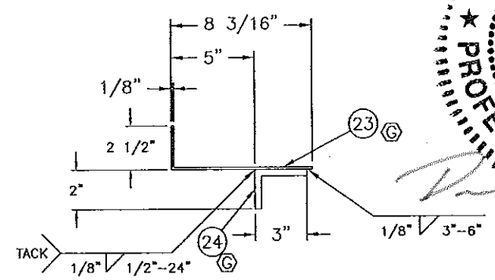

4 ITEMS 23 & 24 – EXTENDED SILL (G)
NTS
MAT'L: .125" THK FORMED ALUM W/.25" THK EXT ALUM ANG
FINISH TO MATCH LOUVER (SHIP LOOSE)

DANIEL J. RAU
LICENSE
NO. 63636
STATE OF FLORIDA
PROFESSIONAL ENGINEER
7/22/2013

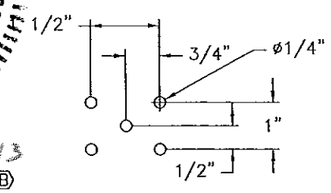

4A EXTENDED SILL DRILL DETAIL
NTS

NOTE:
DESCRIPTION OF LINE ITEMS ON SHEET 6 (G)

CHANGE LETTER	REVISION DESCRIPTION	DWN. BY:	CHK'D. BY:	APPV'D. BY:	APPV'D. BY:	DATE
(G)	GENERAL REVISIONS	DRP	RKP	DJR		7/19/13
(F)	REVISED SILL PART NUMBER (SHEET 6) & SILL FRAME (SHEET 7)	DRP	RKP	DJR		5/10/13
(D)	REV'D TITLE BLOCK	DWS	DJR	DJR		9/12/2008

ENGINEER OF RECORD: DANIEL J. RAU	DWN. BY: WRT DATE: 6/26/6	CHK. BY: DJR DATE: 7/7/6	APPV'D BY: DJR DATE: 7/7/6	APPV'D. BY: DATE:
ENGINEERING DISCIPLINE: CIVIL ENGINEER	SHEET 3 OF 13 (D)			
REGISTRATION NUMBER: STATE OF FLORIDA #0063636				

RUSKIN Mfg Grandview, MO

TITLE: PHB6625D PENTHOUSE DETAILS

PLOT SCALE: NONE

ECN 4621

DWG. NO. 60-022015-00B

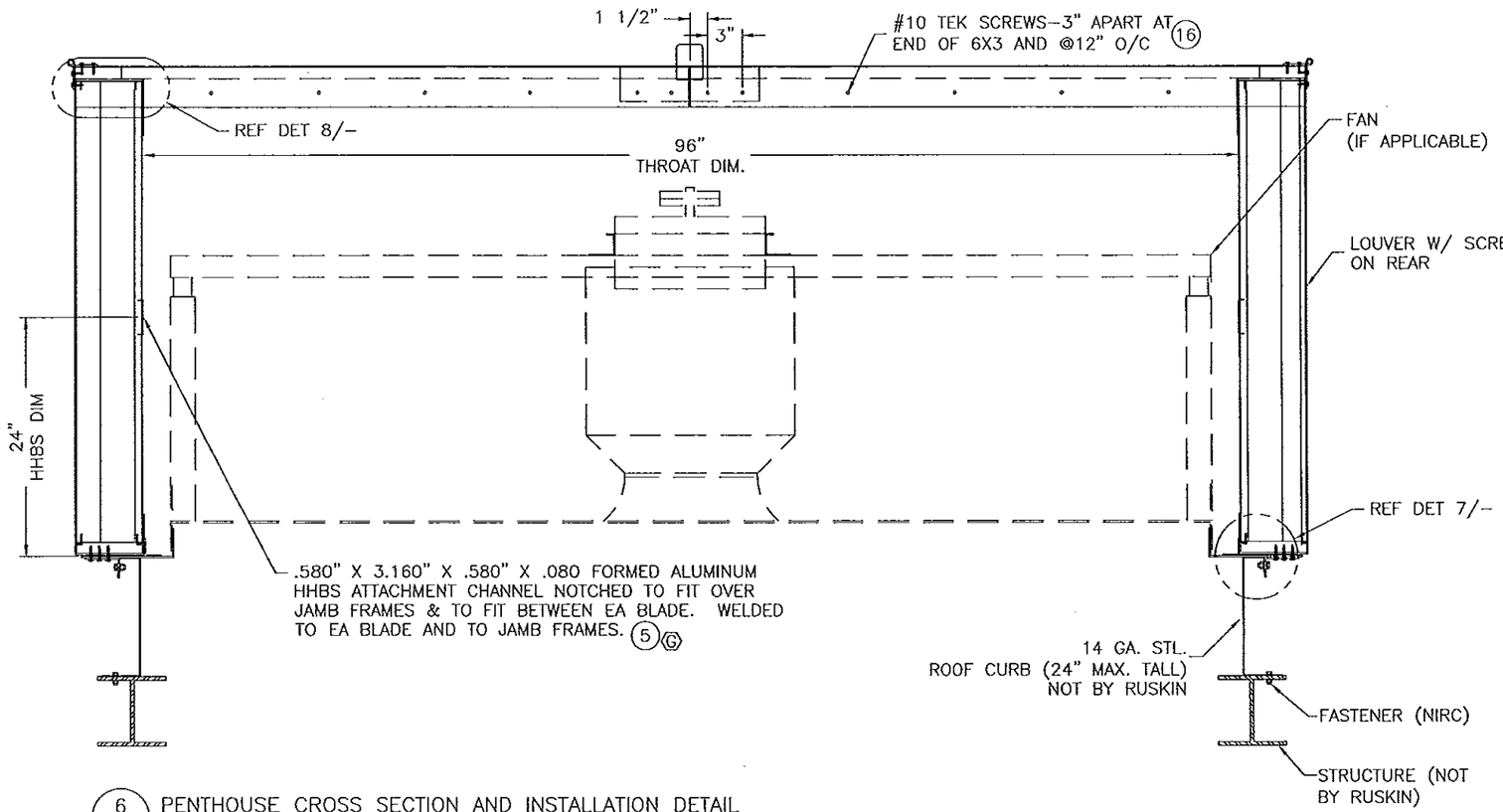

6 — PENTHOUSE CROSS SECTION AND INSTALLATION DETAIL
(G) NTS

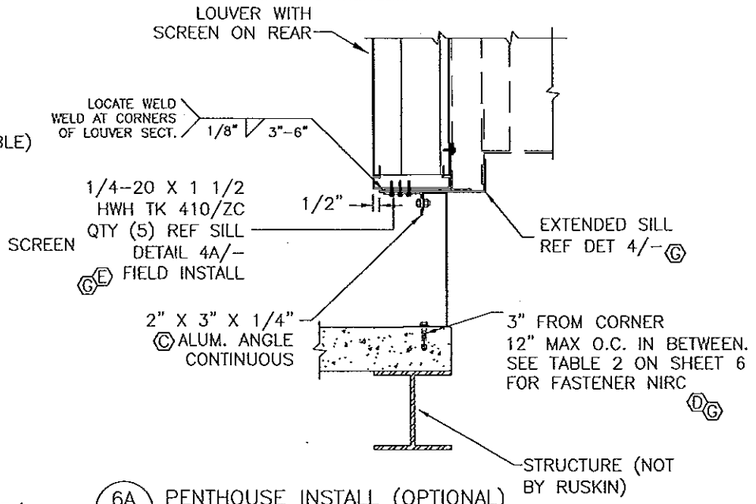

6A — PENTHOUSE INSTALL (OPTIONAL)
(G) NTS
(FOR DETAILS NOT NOTED REF DET 6/-)

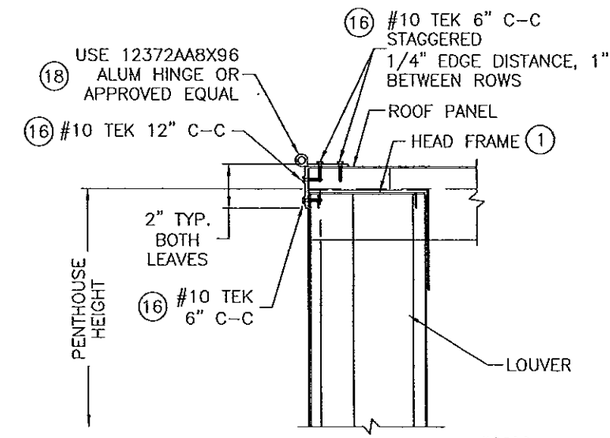

(C) 8 — ROOF FASTENING DETAIL
NTS

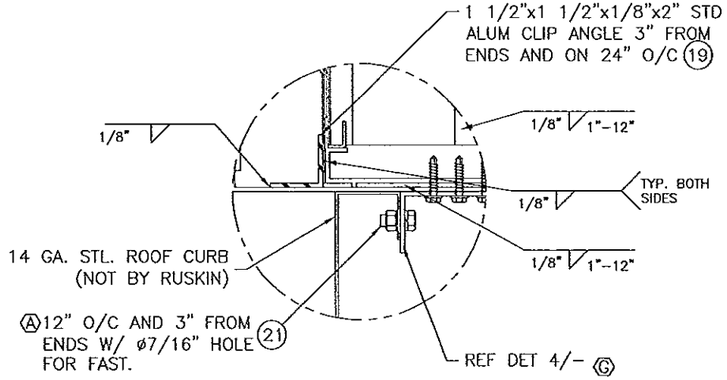

7 — PENTHOUSE/CURB CONNECTION DETAIL
NTS

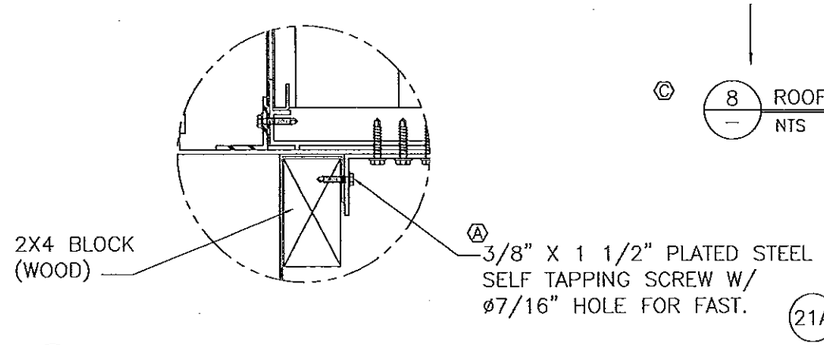

7A — PENTHOUSE/INSULATED CURB CONNECTION DETAIL
NTS

DANIEL J. RAU
LICENSE NO. 63636
STATE OF FLORIDA
PROFESSIONAL ENGINEER
7/22/13

FOR OFFICE USE ONLY

PRODUCT REVISED
as complying with the Florida Building Code
Acceptance No 13-0730.04
Expiration Date 11/20/2018
By
Miami Dade Product Control

NOTE:
DESCRIPTION OF LINE ITEMS ON SHEET 6 (G)

CHANGE LETTER	REVISION DESCRIPTION	DWN. BY:	CHK'D. BY:	APPV'D. BY:	APPV'D. BY:	DATE
(G)	GENERAL REVISIONS	DRP	RKP	DJR		7/19/13
(F)	REVISED SILL PART NUMBER (SHEET 6) & SILL FRAME (SHEET 7)	DRP	RKP	DJR		5/10/13
(E)	ADDED SCREWS & NOTE DUE TO TESTING, REV TITLE BLOCK	DWS	DJR	DJR		9/12/2008

ENGINEER OF RECORD: DANIEL J. RAU	DWN. BY: WRT DATE: 6/26/6	CHK. BY: DJR DATE: 7/7/6	APPV'D. BY: DJR DATE: 7/7/6	APPV'D. BY: DATE:
ENGINEERING DISCIPLINE: CIVIL ENGINEER	SHEET 4 OF 13 (E)			
REGISTRATION NUMBER: STATE OF FLORIDA #0063636				

RUSKIN Mfg Grandview, MO

PLOT SCALE: NONE

ECN 4621

TITLE: PHB6625D PENTHOUSE DETAILS

DWG. NO. 60-022015-00B

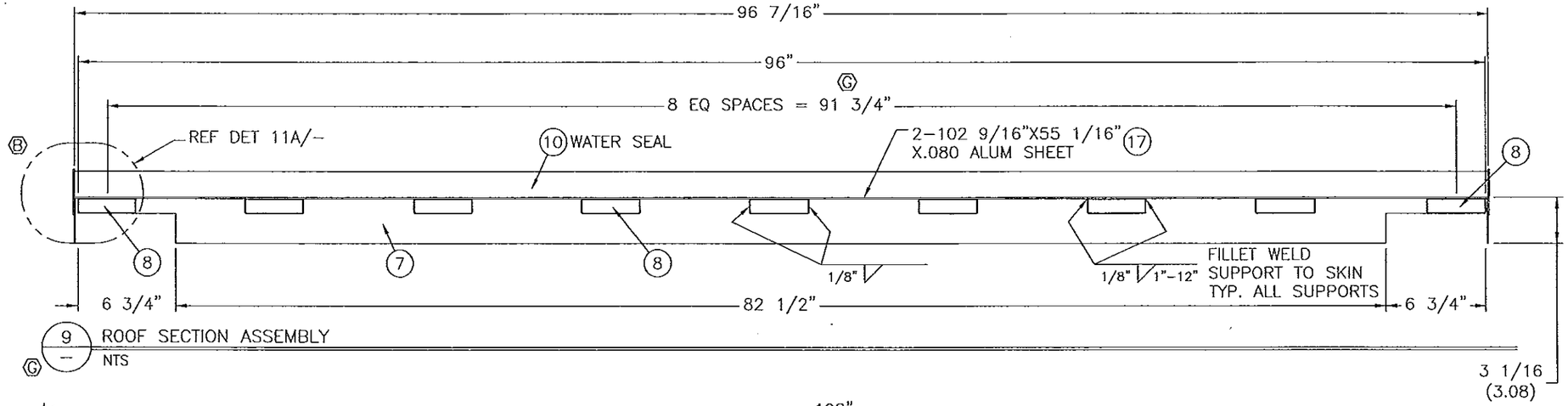

9 ROOF SECTION ASSEMBLY
NTS

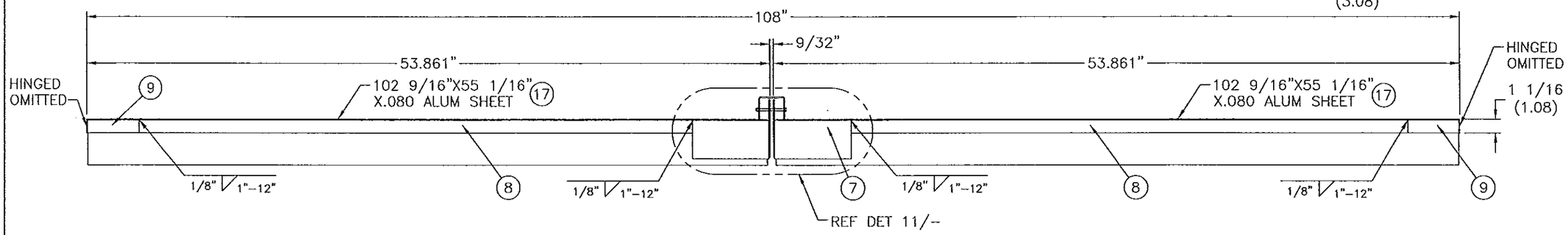

10 ROOF SECTION ASSEMBLY
NTS

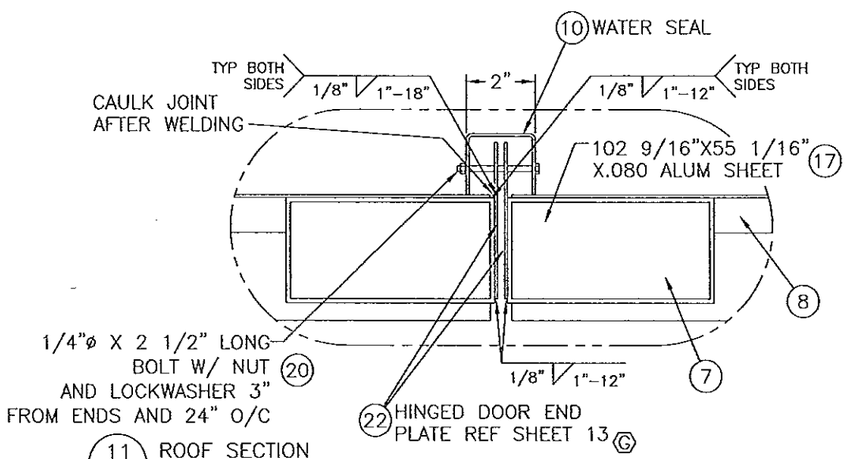

11 ROOF SECTION
NTS

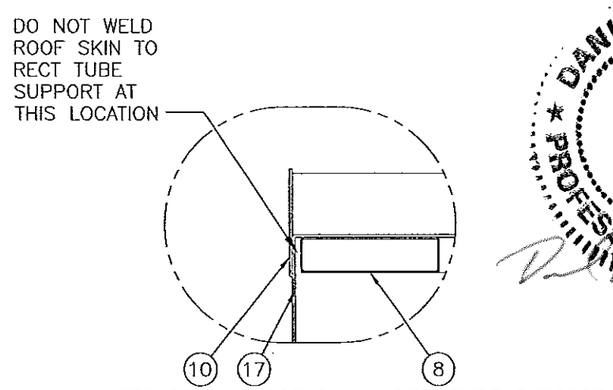

11A ROOF SECTION
NTS

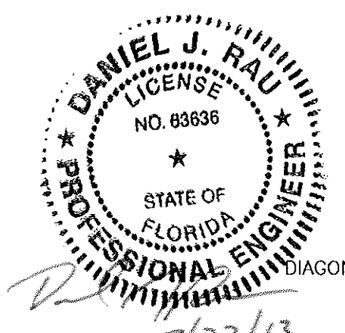

7/22/13

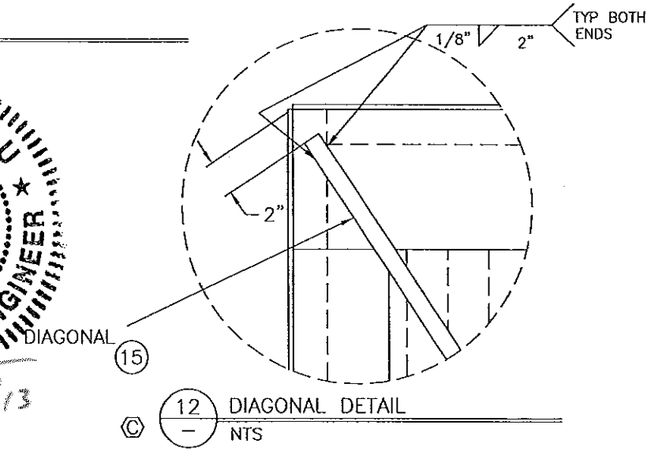

12 DIAGONAL DETAIL
NTS

FOR OFFICE USE ONLY

PRODUCT REVISED
as complying with the Florida
Building Code
Acceptance No 13-0730.04
Expiration Date 11/20/2018
By
Miami Dade Product Control

NOTE:
DESCRIPTION OF LINE ITEMS ON SHEET 6

CHANGE LETTER	REVISION DESCRIPTION	DWN. BY:	CHK'D. BY:	APP'D. BY:	APP'D. BY:	DATE
G	GENERAL REVISIONS	DRP	RKP	DJR		7/19/13
F	REVISED SILL PART NUMBER (SHEET 6) & SILL FRAME (SHEET 7)	DRP	RKP	DJR		5/10/13
C	ADDED DTL 12	DWS	DJR	DJR		9/12/2008

ENGINEER OF RECORD: DANIEL J. RAU	DWN. BY: WRT DATE: 6/26/6	CHK. BY: DJR DATE: 7/7/6	APP'D BY: DJR DATE: 7/7/6	APP'D. BY: DATE:
ENGINEERING DISCIPLINE: CIVIL ENGINEER	SHEET 5 OF 13			
REGISTRATION NUMBER: STATE OF FLORIDA #0063636				

RUSKIN Mfg Grandview, MO

TITLE: PHB6625D PENTHOUSE DETAILS

PLOT SCALE: NONE

ECN 4621

DWG. NO. 60-022015-00B

LINE ITEM	(D) SHEET NUMBER (G)	MATERIAL	DESCRIPTION	RUSKIN NUMBER	
1	7	(G) 6063–T6 ALUM	LOUVER HEAD	70–021995–00B	(G)
2	7	(G) 6063–T6 ALUM	LOUVER SILL	70–022627–00B	(F)
3	7	(G) 6063–T6 ALUM	JAMB FRAME	70–022227–00B	(G)
4	7	6063–T5 ALUM	LOUVER BLADE	70–020748–00B	
(A) 5	8	(G) 6063–T5 ALUM	(G) .580" X 3.160" X .580" X .080" X 84"	RSM7001	(G)
(A) 6	8	(G) 6063–T5 ALUM	(G) .580" X 3.160" X .580" X .080" X 96"	RSM7001	(G)
7	9	6063–T6 1/8" ALUM	3"X6" RECT TUBE ROOF SUPPORT	–	
8	9	6063–T6 1/8" ALUM	1"X4" RECT TUBE SUPPORT (SHORT)	–	
9	9	6063–T6 1/8" ALUM	1"X4" RECT TUBE SUPPORT (LONG)	–	
(A) 10	9	3003–H14 1/8" ALUM	WATER SEAL	–	
(A) 11	10	3003–H14 3/8" ALUM	SPECIAL LIFTING LUG	–	
(A) 12	11	3003–H14 .080 ALUM	LH CORNER FLASHING	–	
(A) 13	11	3003–H14 .080 ALUM	RH CORNER FLASHING	–	
14	2	6063–T6 1/4" ALUM	2"X2"X1/4"X48" ANGLE	–	
(E) 15	–	6063–T5 ALUM	DIAGONAL 1"x 1/8" THK ALUM BAR	–	
16	–	PLATED STEEL	#10–16X1" TEK SCREW	–	
17	12	3003–H14 .080" ALUM	ROOF SKIN .08" THK	–	
18	12	5052 ALUM	12372AA8X96 HINGE–1/8" THK, 3/8" PIN, 2" KNUCKLE	–	
(G)(A) 19	12	(G) 3003–H14 ALUM	1 1/2"X1 1/2"X1/8"X2" CLIP ANGLE	85–020366–00B	
(A) 20	–	PLATED STEEL	1/4"X2 1/2" HHB W/ LOCKWASHER, & HEX NUT	–	
21	–	PLATED STEEL	3/8" X 1 1/2" HHB W/ WASHER, LOCKWASHER, & HEX NUT	–	
21A	–	PLATED STEEL	3/8" X 1 1/2" PLATED STEEL SELF TAPPING SCREW	–	
(A) 22	13	3003–H14 ALUM	4 7/16"X 95 7/8"X .080" HINGED DOOR END PLATE	–	
(A) 23	3	3003–H14 ALUM	EXTENDED SILL .125" THK FORMED ALUM	–	
(C) 24	3	6063–T6 1/4" ALUM	EXTENDED SILL 2" X 3" X 1/4" ALUM ANGLE	–	
(D) 25	–	–	BLANKOFF X" x Y" x ALUM. SHEET	–	

TABLE 2 (B)

BASE MATERIAL	FASTENER TYPE	SPECIAL REQUIREMENT
TIMBER FRAME	5/16" DIA. LAG SCREW	3" MINIMUM EMBEDMENT, 1 1/2" EDGE DISTANCE
STEEL DECKING	3/8" DIA. SELF–TAPPING SCREW	10 GAUGE MINIMUM THICKNESS FOR BASE MATERIAL
CONCRETE	3/8" DIA. HILTI KWIK BOLT II EXP. ANCHOR OR EQUAL	2 1/2" MINIMUM EMBEDMENT AND EDGE DISTANCE, 2000 PSI MIN CONCRETE

FOR OFFICE USE ONLY

PRODUCT REVISED
as complying with the Florida Building Code
Acceptance No 13-0730.04
Expiration Date 11/20/2018
By
Miami Dade Product Control

DANIEL J. RAU
LICENSE
NO. 63636
STATE OF FLORIDA
PROFESSIONAL ENGINEER
7/22/13

CHANGE LETTER	REVISION DESCRIPTION	DWN. BY:	CHK'D. BY:	APPV'D. BY:	APPV'D. BY:	DATE
(G)	GENERAL REVISIONS	DRP	RKP	DJR		7/19/13
(F)	REVISED SILL PART NUMBER (SHEET 6) & SILL FRAME (SHEET 7)	DRP	RKP	DJR		5/10/13
(E)	CHGD ITM 15 TO DIAG	DWS	DJR	DJR		9/12/2008

ENGINEER OF RECORD: DANIEL J. RAU	DWN. BY: WRT DATE: 6/26/6	CHK. BY: DJR DATE: 7/7/6	APPV'D. BY: DJR DATE: 7/7/6	APPV'D. BY: DATE:
ENGINEERING DISCIPLINE: CIVIL ENGINEER	SHEET 6 OF 13			
REGRISTRATION NUMBER: STATE OF FLORIDA #0063636				

RUSKIN SWARTWOUT
3900 DR. GREAVES RD
GRANDVIEW, MO 64030
PROPRIETARY INFORMATION

PLOT SCALE: NONE
ECN 4621

TITLE: PHB6625D PENTHOUSE ITEM LIST AND APPROVED (G) ATTACHMENTS TABLE

DWG. NO. 60-022015-00B

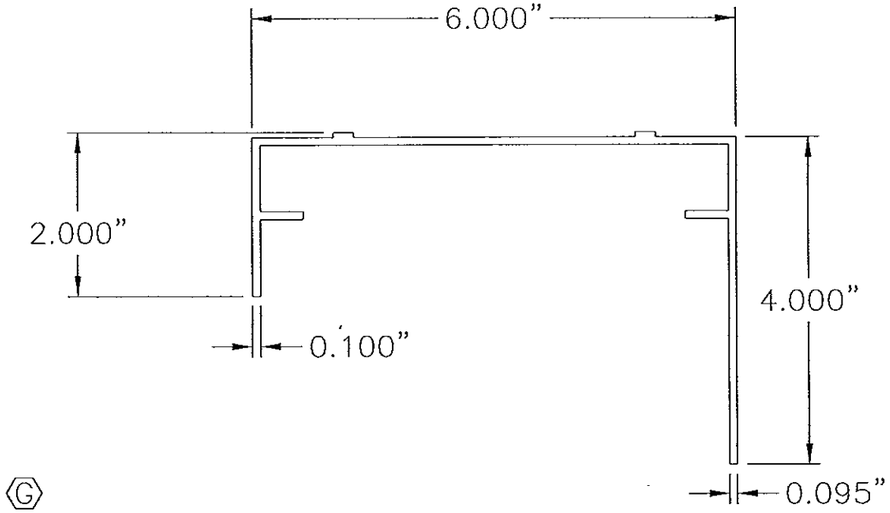

(G) ITEM 1 – HEAD FRAME

NTS

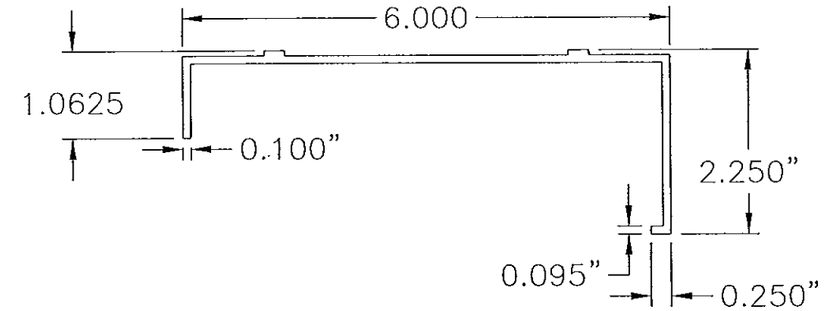

(G) ITEM 3 – JAMB FRAME

NTS

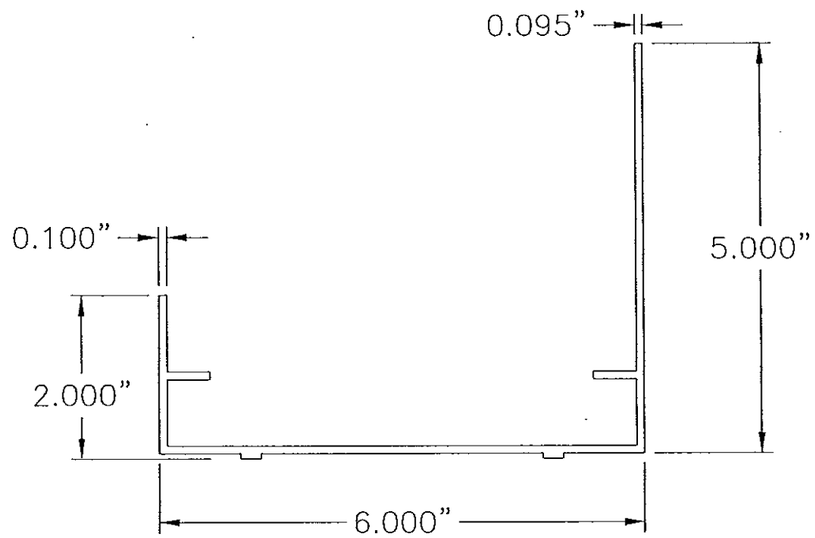

(G)(F) ITEM 2 – SILL FRAME

NTS

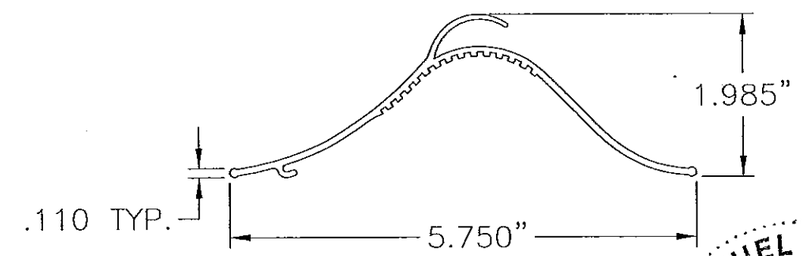

(G) ITEM 4 – LOUVER BLADE

NTS

NOTES: (G)

1. REF. SHEET 6 FOR MATERIAL.

DANIEL J. RAU
LICENSE
NO. 63636
STATE OF
FLORIDA
PROFESSIONAL ENGINEER

7/22/13

CHANGE LETTER	REVISION DESCRIPTION	DWN. BY:	CHK'D. BY:	APPV'D. BY:	APPV'D. BY:	DATE
(G)	GENERAL REVISIONS	DRP	RKP	DJR		7/19/13
(F)	REVISED SILL PART NUMBER (SHEET 6) & SILL FRAME (SHEET 7)	DRP	RKP	DJR		5/10/13

FOR OFFICE USE ONLY (G)

PRODUCT REVISED
as complying with the Florida Building Code
Acceptance No 13-0730.04
Expiration Date 11/20/2018
By
Miami Dade Product Control

ENGINEER OF RECORD	DWN. BY:	CHK. BY:	APPV'D. BY:	APPV'D. BY:
DANIEL J. RAU	WRT	DJR	DJR	
	DATE: 6/26/6	DATE: 7/7/6	DATE: 7/7/6	DATE:

ENGINEERING DISCIPLINE: CIVIL ENGINEER

REGISTRATION NUMBER: STATE OF FLORIDA #0063636

SHEET 7 OF 13

RUSKIN SWARTWOUT
3900 DR. GREAVES RD
GRANDVIEW, MO 64030
PROPRIETARY INFORMATION

TITLE: PHB6625D PENTHOUSE PART DETAILS

PLOT SCALE: NONE

ECN 4621

DWG. NO. 60-022015-00B

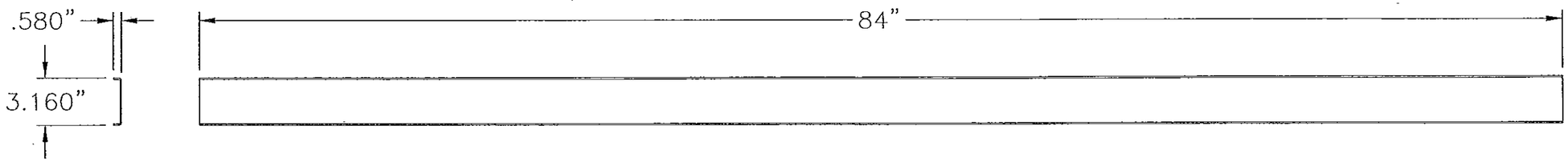

Ⓖ ITEM 5 – .580" X 3.160" X .580" X .080" EXTRUDED ALUMINUM

NTS

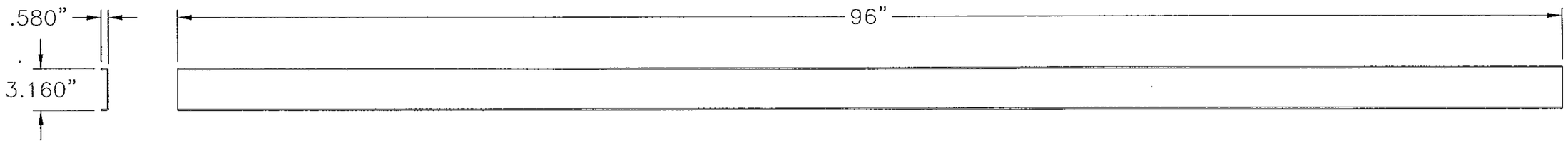

Ⓖ ITEM 6 – .580" X 3.160" X .580" X .080" EXTRUDED ALUMINUM

NTS

DANIEL J. RAU
LICENSE
NO. 63636
STATE OF
FLORIDA
PROFESSIONAL ENGINEER

7/22/13

NOTES: Ⓖ

1. REF. SHEET 6 FOR MATERIAL.

FOR OFFICE USE ONLY

PRODUCT REVISED
as complying with the Florida
Building Code
Acceptance No 13-0730.04
Expiration Date 11/20/2018
By
Miami Dade Product Control

Ⓖ	GENERAL REVISIONS	DRP	RKP	DJR		7/19/13
Ⓕ	REVISED SILL PART NUMBER (SHEET 6) & SILL FRAME (SHEET 7)	DRP	RKP	DJR		5/10/13
CHANGE LETTER	REVISION DESCRIPTION	DWN. BY:	CHK'D. BY:	APPV'D. BY:	APPV'D. BY:	DATE

ENGINEER OF RECORD: DANIEL J. RAU

ENGINEERING DISCIPLINE: CIVIL ENGINEER

REGRISTRATION NUMBER: STATE OF FLORIDA #0063636

DWN. BY: WRT	CHK. BY: DJR	APPV'D. BY: DJR	APPV'D. BY:
DATE: 6/26/6	DATE: 7/7/6	DATE: 7/7/6	DATE:

SHEET 8 OF 13

RUSKIN SWARTWOUT
3900 DR. GREAVES RD
GRANDVIEW, MO 64030
PROPRIETARY INFORMATION

PLOT SCALE: NONE

ECN 4621

TITLE: PHB6625D Ⓖ PART DETAILS

DWG. NO. 60-022015-00B

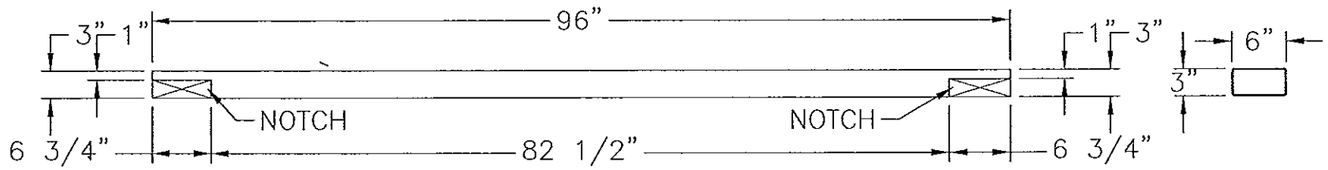

ITEM 7 – 3"X6" ROOF RAFTER
NTS

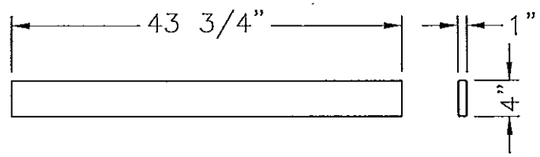

ITEM 8 – 1"X4" ROOF RAFTER
NTS

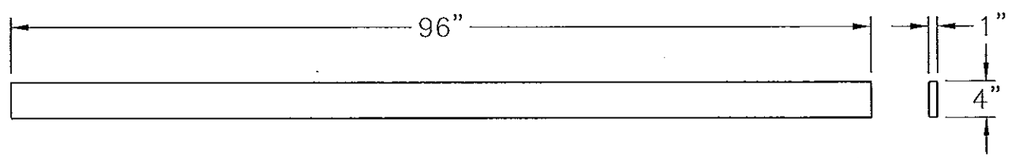

ITEM 9 – 1"X4" ROOF RAFTER
NTS

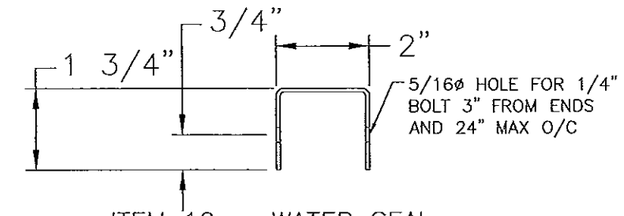

ITEM 10 – WATER SEAL
NTS
LENGTH: 96 7/16"

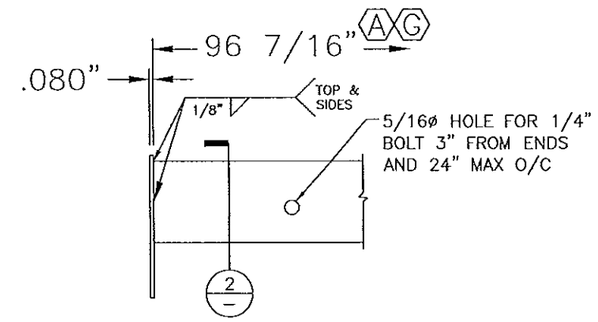

1 – WATER SEAL AT END
NTS

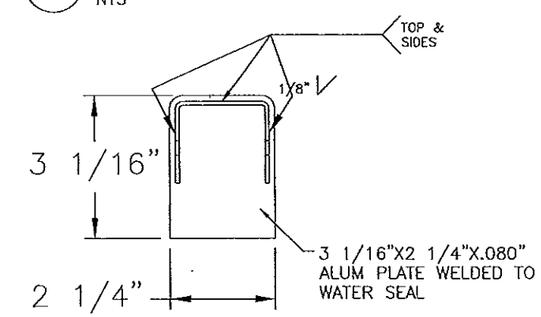

2 – WATER SEAL AT END DETAIL
NTS

DANIEL J. RAU
LICENSE
NO. 63636
STATE OF
FLORIDA
PROFESSIONAL ENGINEER
7/22/13

NOTES:
1. REF SHEET 6 FOR MATERIAL. G

FOR OFFICE USE ONLY

PRODUCT REVISED
as complying with the Florida
Building Code
Acceptance No 13-0730.04
Expiration Date 11/20/2018
By
Miami Dade Product Control

ENGINEER OF RECORD			
DANIEL J. RAU			
ENGINEERING DISCIPLINE			
CIVIL ENGINEER			
REGRISTRATION NUMBER			
STATE OF FLORIDA #0063636			
DWN. BY: WRT	CHK. BY: DJR	APPV'D. BY: DJR	APPV'D. BY:
DATE: 6/25/6	DATE: 7/7/6	DATE: 7/7/6	DATE:
SHEET 9 OF 13			

CHANGE LETTER	REVISION DESCRIPTION	DWN. BY:	CHK'D. BY:	APPV'D. BY:	APPV'D. BY:	DATE
G	GENERAL REVISIONS	DRP	RKP	DJR		7/19/13
F	REVISED SILL PART NUMBER (SHEET 6) & SILL FRAME (SHEET 7)	DRP	RKP	DJR		5/10/13
A	CHNG'D DIM. FOR DETAIL (1) TO 96 7/16"	TMH	DWS	DWS		7/19/07

RUSKIN
SWARTWOUT
3900 DR. GREAVES RD
GRANDVIEW, MO 64030
PROPRIETARY INFORMATION

PLOT SCALE: NONE
ECN 4621

TITLE
PHB6625D PENTHOUSE
PART DETAILS

DWG. NO.
60-022015-00B

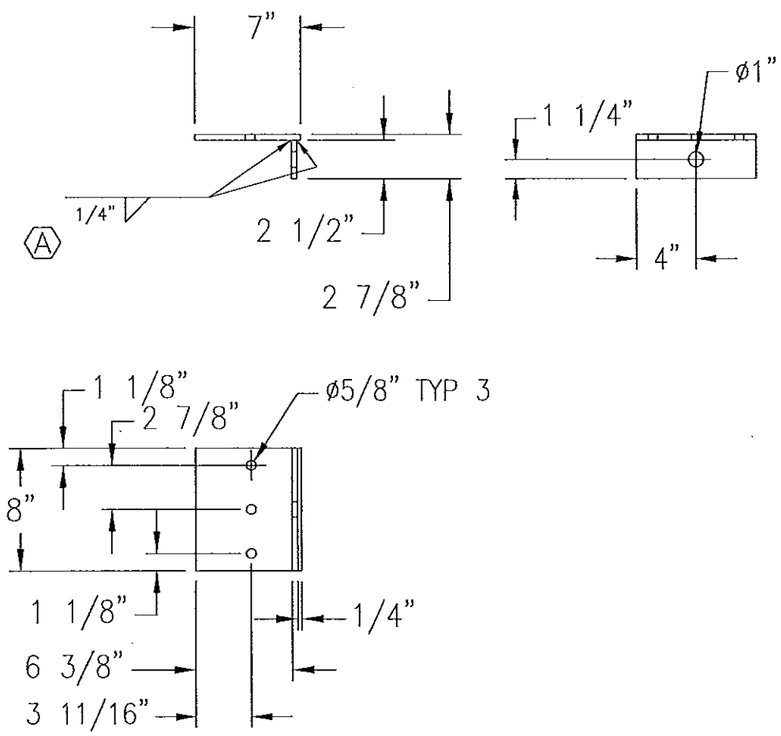

ITEM 11 – SPECIAL LIFTING LUG

NTS

NOTES:

1. REF SHEET 6 FOR MATERIAL. G

DANIEL J. RAU
LICENSE
NO. 63636
STATE OF FLORIDA
PROFESSIONAL ENGINEER
7/22/13

FOR OFFICE USE ONLY

PRODUCT REVISED
as complying with the Florida
Building Code
Acceptance No 13-0730.04
Expiration Date 11/20/2018
By
Miami Dade Product Control

ENGINEER OF RECORD			
DANIEL J. RAU			
ENGINEERING DISCIPLINE			
CIVIL ENGINEER			
REGRISTRATION NUMBER			
STATE OF FLORIDA #0063636			
DWN. BY: WRT	CHK. BY: DJR	APPV'D. BY: DJR	APPV'D. BY:
DATE: 6/25/6	DATE: 7/7/6	DATE: 7/7/6	DATE:
SHEET 10 OF 13			

CHANGE LETTER	REVISION DESCRIPTION	DWN. BY:	CHK'D. BY:	APPV'D. BY:	APPV'D. BY:	DATE
G	GENERAL REVISIONS	DRP	RKP	DJR		7/19/13
F	REVISED SILL PART NUMBER (SHEET 6) & SILL FRAME (SHEET 7)	DRP	RKP	DJR		5/10/13
A	REV'D WELD SIZE ON ITEM 11	DDM	DWS	DJR		5/31/07

RUSKIN
SWARTWOUT
3900 DR. GREAVES RD
GRANDVIEW, MO 64030
PROPRIETARY INFORMATION

PLOT SCALE: NONE

ECN 4621

TITLE: PHB6625D PENTHOUSE PART DETAILS

DWG. NO. 60-022015-00B

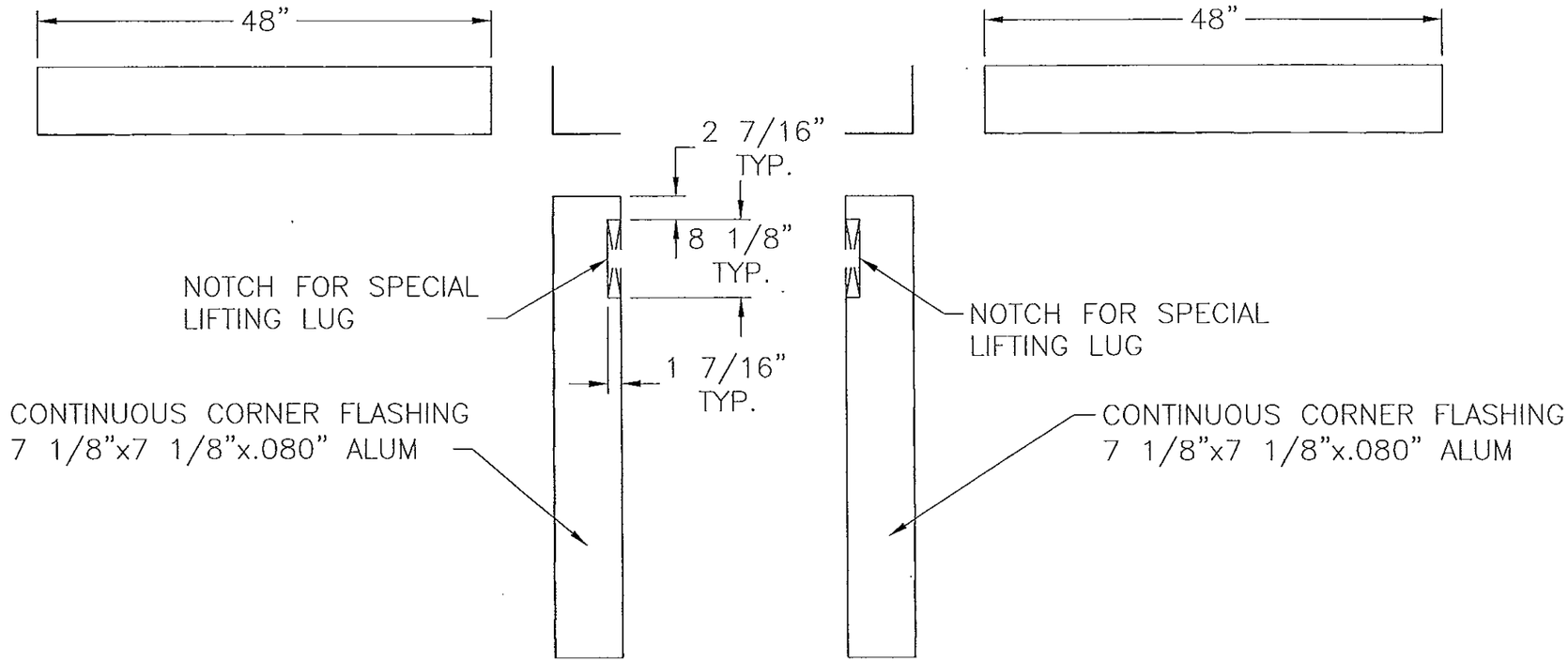

Ⓖ ITEM 12 – LEFT HAND CORNER FLASHING
NTS

Ⓖ ITEM 13 – RIGHT HAND CORNER FLASHING
NTS

FOR OFFICE USE ONLY

PRODUCT REVISED
as complying with the Florida Building Code
Acceptance No 13-0730.04
Expiration Date 11/20/2018
By
Miami Dade Product Control

DANIEL J. RAU
LICENSE NO. 63636
STATE OF FLORIDA
PROFESSIONAL ENGINEER
7/22/13

NOTES:
1. REF SHEET 6 FOR MATERIAL. Ⓖ

CHANGE LETTER	REVISION DESCRIPTION	DWN. BY:	CHK'D. BY:	APPV'D. BY:	APPV'D. BY:	DATE
Ⓖ	GENERAL REVISIONS	DRP	RKP	DJR		7/19/13
Ⓕ	REVISED SILL PART NUMBER (SHEET 6) & SILL FRAME (SHEET 7)	DRP	RKP	DJR		5/10/13

ENGINEER OF RECORD: DANIEL J. RAU	DWN. BY: WRT DATE: 6/25/6	CHK. BY: DJR DATE: 7/7/6	APPV'D. BY: DJR DATE: 7/7/6	APPV'D. BY: DATE:
ENGINEERING DISCIPLINE: CIVIL ENGINEER	SHEET 11 OF 13			
REGRISTRATION NUMBER: STATE OF FLORIDA #0063636				

RUSKIN SWARTWOUT
3900 DR. GREAVES RD
GRANDVIEW, MO 64030
PROPRIETARY INFORMATION

PLOT SCALE: NONE
ECN 4621

TITLE: PHB6625D PENTHOUSE Ⓖ PART DETAILS

DWG. NO. 60-022015-00B

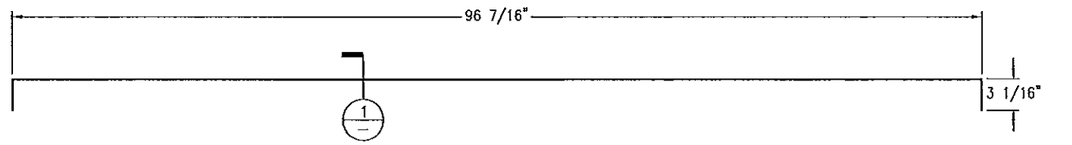

ITEM 17 – PENTHOUSE ROOF SKIN
NTS

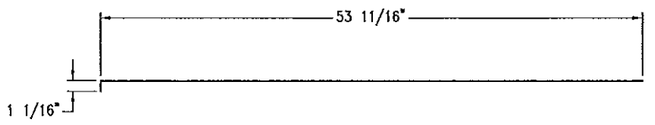

1/— PENTHOUSE ROOF SKIN SECTION
NTS

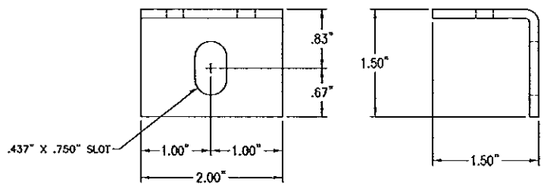

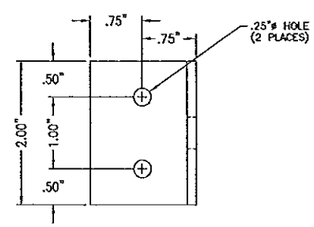

ITEM 19 – 1 1/2"X1 1/2"X1/8"X2" CLIP ANGLE
NTS

PLANT REF: 85–020366–00B

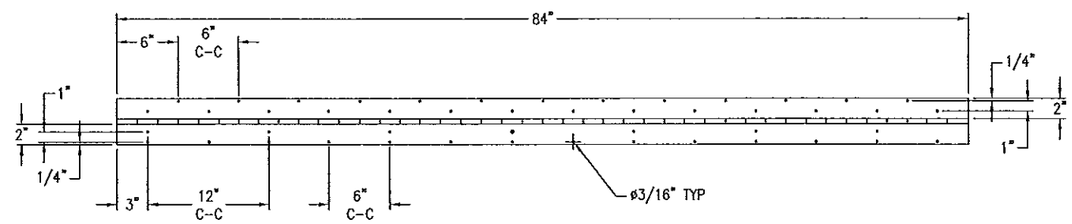

(B) ITEM 18 – HINGE DETAIL
NTS

DANIEL J. RAU
LICENSE
NO. 63636
STATE OF
FLORIDA
PROFESSIONAL ENGINEER
7/22/13

FOR OFFICE USE ONLY

PRODUCT REVISED
as complying with the Florida
Building Code
Acceptance No 13-0730.04
Expiration Date 11/20/2018
By
Miami-Dade Product Control

NOTES:
1. REF SHEET 6 FOR MATERIAL. (G)

(G)	GENERAL REVISIONS	DRP	RKP	DJR		7/19/13
(F)	REVISED SILL PART NUMBER (SHEET 6) & SILL FRAME (SHEET 7)	DRP	RKP	DJR		5/10/13
(A)	REV'D ITEM 18 HINGE DETAIL	DDM	DWS	DJR		5/31/07
CHANGE LETTER	REVISION DESCRIPTION	DWN. BY:	CHK'D. BY:	APPV'D. BY:	APPV'D. BY:	DATE

ENGINEER OF RECORD
DANIEL J. RAU

ENGINEERING DISCIPLINE
CIVIL ENGINEER

REGISTRATION NUMBER
STATE OF FLORIDA #0063636

DWN. BY: WRT	CHK. BY: DJR	APPV'D. BY: DJR	APPV'D. BY:
DATE: 6/26/6	DATE: 7/7/6	DATE: 7/7/6	DATE:

SHEET 12 OF 13

RUSKIN SWARTWOUT
3900 DR. GREAVES RD
GRANDVIEW, MO 64030
PROPRIETARY INFORMATION

PLOT SCALE
NONE

ECN 4621

TITLE
PHB6625D PENTHOUSE
PART DETAILS

DWG. NO.
60-022015-00B

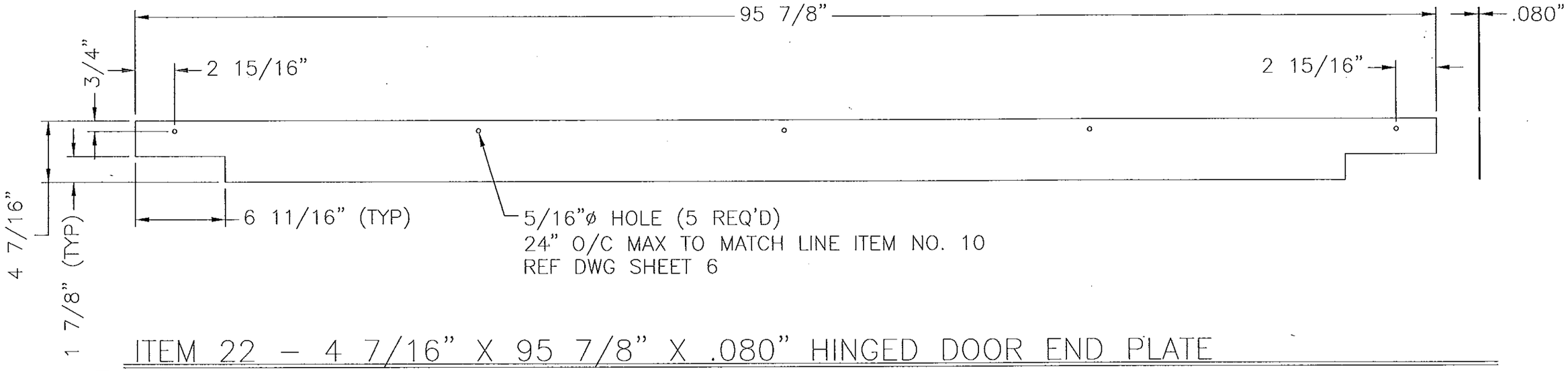

ITEM 22 – 4 7/16" X 95 7/8" X .080" HINGED DOOR END PLATE

(G) NTS

FOR OFFICE USE ONLY

PRODUCT REVISED
as complying with the Florida
Building Code
Acceptance No 13-0730.04
Expiration Date 11/20/2018
By
Miami Dade Product Control

DANIEL J. RAU
LICENSE
NO. 63636
STATE OF
FLORIDA
PROFESSIONAL ENGINEER
7/22/13

NOTES:
1. REF SHEET 6 FOR MATERIAL. (G)

CHANGE LETTER	REVISION DESCRIPTION	DWN. BY:	CHK'D. BY:	APPV'D. BY:	APPV'D. BY:	DATE
(G)	GENERAL REVISIONS	DRP	RKP	DJR		7/19/13
(F)	REVISED SILL PART NUMBER (SHEET 6) & SILL FRAME (SHEET 7)	DRP	RKP	DJR		5/10/13

ENGINEER OF RECORD DANIEL J. RAU	DWN. BY: WRT DATE: 6/25/6	CHK. BY: DJR DATE: 7/7/6	APPV'D. BY: DJR DATE: 7/7/6	APPV'D. BY: DATE:
ENGINEERING DISCIPLINE CIVIL ENGINEER	SHEET 13 OF 13			
REGISTRATION NUMBER STATE OF FLORIDA #0063636				

RUSKIN SWARTWOUT
3900 DR. GREAVES RD
GRANDVIEW, MO 64030
PROPRIETARY INFORMATION

PLOT SCALE: NONE

ECN 4621

TITLE: PHB6625D PENTHOUSE (G) PART DETAILS

DWG. NO. 60-022015-00B