MIAMI-DADE COUNTY
DEPARTMENT OF REGULATORY AND ECONOMIC RESOURCES (RER)
BOARD AND CODE ADMINISTRATION DIVISION

MIAMI-DADE COUNTY
PRODUCT CONTROL SECTION
11805 SW 26 Street, Room 208
T (786) 315-2590 F (786) 315-2599
www.miamidade.gov/economy

NOTICE OF ACCEPTANCE (NOA)

Eurotech Industries, Inc.
4201 NE 12th Terrace
Ft. Lauderdale, FL 33334

SCOPE:

This NOA is being issued under the applicable rules and regulations governing the use of construction materials. The documentation submitted has been reviewed and accepted by Miami-Dade County RER - Product Control Section to be used in Miami Dade County and other areas where allowed by the Authority Having Jurisdiction (AHJ).

This NOA shall not be valid after the expiration date stated below. The Miami-Dade County Product Control Section (In Miami Dade County) and/or the AHJ (in areas other than Miami Dade County) reserve the right to have this product or material tested for quality assurance purposes. If this product or material fails to perform in the accepted manner, the manufacturer will incur the expense of such testing and the AHJ may immediately revoke, modify, or suspend the use of such product or material within their jurisdiction. RER reserves the right to revoke this acceptance, if it is determined by Miami-Dade County Product Control Section that this product or material fails to meet the requirements of the applicable building code.

This product is approved as described herein, and has been designed to comply with the Florida Building Code, including the High Velocity Hurricane Zone.

DESCRIPTION: Aluminum Horizontal Sliding Window – L.M.I.

APPROVAL DOCUMENT: Drawing No. **W03-71**, titled "Alum Horizontal Rolling Window (L.M.I.)", sheets 1 through 7 of 7, dated 08/21/03, with revision F dated 11/04/11, prepared by Al-Farooq Corporation, signed and sealed by Javad Ahmad, P.E., bearing the Miami-Dade County Product Control Renewal stamp with the Notice of Acceptance number and expiration date by the Miami-Dade County Product Control Section.

MISSILE IMPACT RATING: Large and Small Missile Impact Resistant

LABELING: Each unit shall bear a permanent label with the manufacturer's name or logo, city, state, model/series, and following statement: "Miami-Dade County Product Control Approved", unless otherwise noted herein.

RENEWAL of this NOA shall be considered after a renewal application has been filed and there has been no change in the applicable building code negatively affecting the performance of this product.

TERMINATION of this NOA will occur after the expiration date or if there has been a revision or change in the materials, use, and/or manufacture of the product or process. Misuse of this NOA as an endorsement of any product, for sales, advertising or any other purposes shall automatically terminate this NOA. Failure to comply with any section of this NOA shall be cause for termination and removal of NOA.

ADVERTISEMENT: The NOA number preceded by the words Miami-Dade County, Florida, and followed by the expiration date may be displayed in advertising literature. If any portion of the NOA is displayed, then it shall be done in its entirety.

INSPECTION: A copy of this entire NOA shall be provided to the user by the manufacturer or its distributors and shall be available for inspection at the job site at the request of the Building Official.

This NOA **renews NOA# 12-0208.02** and consists of this page 1 and evidence pages E-1 and E-2, as well as approval document mentioned above.

The submitted documentation was reviewed by **Manuel Perez, P.E.**

MIAMI-DADE COUNTY APPROVED

10/24/13

Eurotech Industries, Inc.

NOTICE OF ACCEPTANCE: EVIDENCE SUBMITTED

A. DRAWINGS

1. Manufacturer's die drawings and sections.
   (Submitted under NOA No. 03-1017.03)
2. Drawing No **W03-71**, Sheets 1 through 7 of 7, titled "Alum Horizontal Rolling Window (L.M.I.)", dated 08/21/03, with revision F dated 11/04/11, prepared by Al-Farooq Corporation, signed and sealed by Javad Ahmad, P.E.
   (Submitted under previous NOA No. 12-0208.02)

B. TESTS

1. Test reports on: 1) Air Infiltration Test, per FBC, TAS 202-94
   2) Uniform Static Air Pressure Test, Loading per FBC, TAS 20294
   3) Water Resistance Test, per FBC, TAS 202-94
   4) Forced Entry Test, per FBC 2411 3.2.1 and TAS 202-94

   along with installation diagram of an aluminum horizontal sliding window, prepared by Hurricane Engineering & Testing, Inc., Test Reports **No. HETI-04-1376,** dated August 02, 2004, signed and sealed by Rafael E. Droz-Seda, P.E.
   (Submitted under NOA No. 06-1019.04)
2. Test reports on: 1) Air Infiltration Test, per FBC, TAS 202-94
   2) Uniform Static Air Pressure Test, Loading per FBC, TAS 20294
   3) Water Resistance Test, per FBC, TAS 202-94
   4) Forced Entry Test, per FBC 2411 3.2.1 and TAS 202-94

   along with installation diagram of an aluminum horizontal sliding window, prepared by Hurricane Engineering & Testing, Inc., Test Report **No. HETI-03-1323,** dated June 6, 2003, signed and sealed by Rafael E. Droz-Seda, P.E.
   (Submitted under NOA No. 03-1017.03)
   Revision dated July 12, 2007, signed and sealed by Rafael E. Droz-Seda, P.E.
3. Test reports on: 1) Large Missile Impact Test per FBC, TAS 201-94
   2) Cyclic Wind Pressure Loading per FBC, TAS 203-94

   along with installation diagram of an aluminum horizontal sliding window, prepared by Hurricane Engineering & Testing, Inc., Test Report **No. HETI-03-1821,** dated June 6, 2003, signed and sealed by Rafael E. Droz-Seda, P.E.
   (Submitted under NOA No. 03-1017.03)

C. CALCULATIONS

1. Anchor verification calculations and structural analysis, complying with FBC-2010, dated 11/02/11, prepared by Al-Farooq Corporation, signed and sealed by Javad Ahmad P.E.
   (Submitted under previous NOA No. 12-0208.02)
2. Glazing complies with **ASTM E1300-04**

Manuel Perez

Manuel Perez, P.E.
Product Control Examiner
NOA No. 13-0815.08
Expiration Date: December 18, 2018
Approval Date: October 31, 2013

NOTICE OF ACCEPTANCE: EVIDENCE SUBMITTED

D. QUALITY ASSURANCE

1. Miami–Dade Department of Regulatory and Economic Resources (RER).

E. MATERIAL CERTIFICATIONS

1. Notice of Acceptance No. **11–0624.02** issued to **E.I. DuPont DeNemours & Co.**, Inc. for their "**DuPont SentryGlas® Interlayer**" dated 08/25/11, expiring on 01/14/17.
2. Notice of Acceptance No. **12–1231.10** issued to **Eastman Chemical Company (MA)** for their "**Saflex Clear and Color Glass Interlayers**" dated 03/28/13, expiring on 05/21/16.

F. STATEMENTS

1. Statement letter of conformance, complying with **FBC-2010**, dated July 29, 2013, prepared by Al-Farooq Corporation, signed and sealed by Javad Ahmad, P.E.
2. Statement letter of conformance, complying with **FBC-2010**, and of no financial interest, dated November 02, 2011, prepared by Al-Farooq Corporation, signed and sealed by Javad Ahmad, P.E.
   (Submitted under previous NOA No. 12-0208.02)

G. OTHER

1. Notice of Acceptance No. **12-0208.02**, issued to Eurotech Industries, Inc. for their Aluminum Horizontal Sliding Window - L.M.I., approved on 04/19/12 and expiring on 12/18/13.

Manuel Perez

Manuel Perez, P.E.
Product Control Examiner
NOA No. 13-0815.08
Expiration Date: December 18, 2018
Approval Date: October 31, 2013

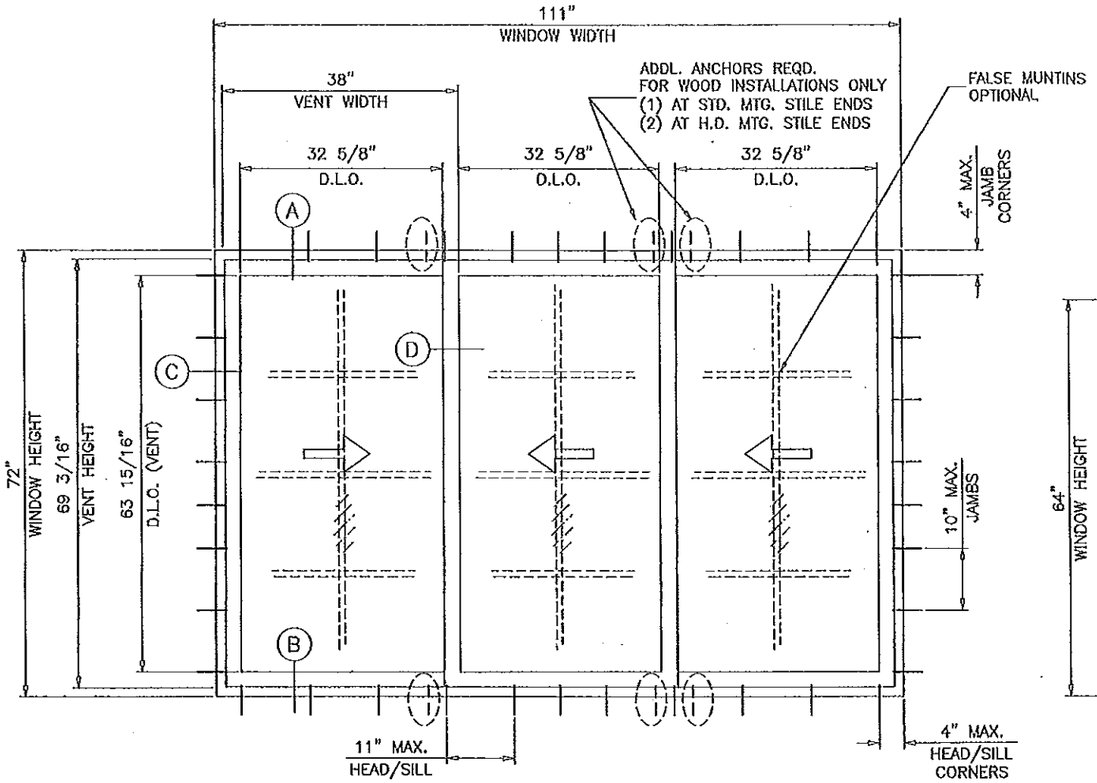

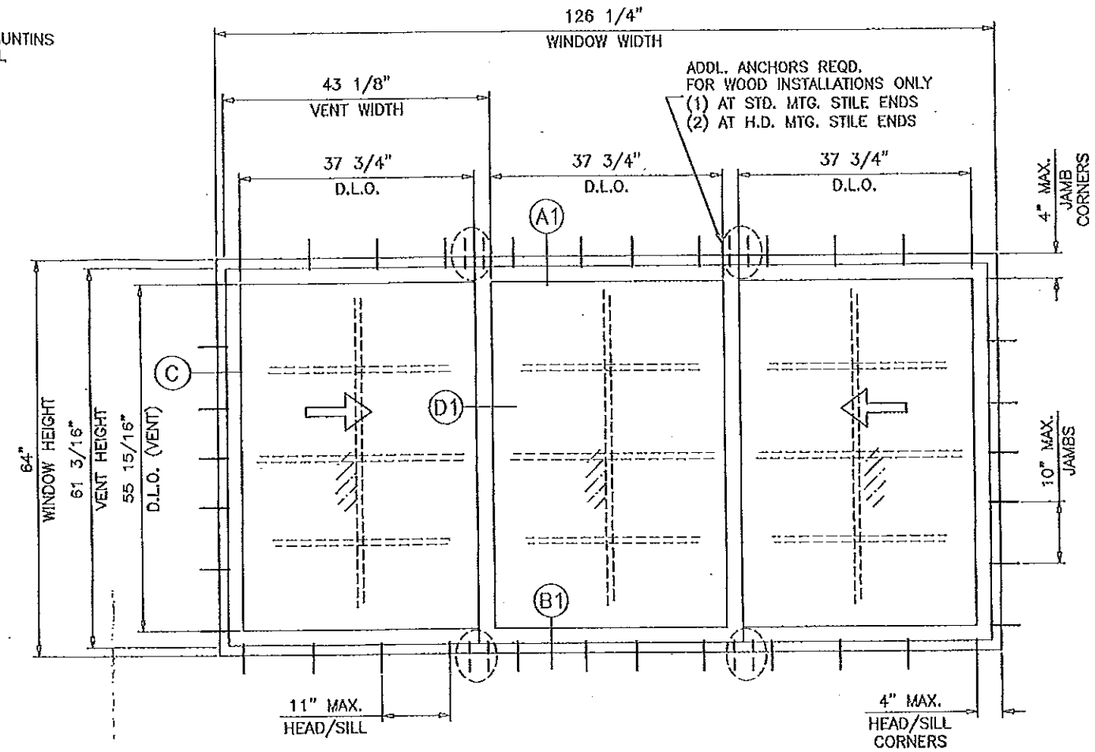

TYPICAL ELEVATION

TESTED UNITS

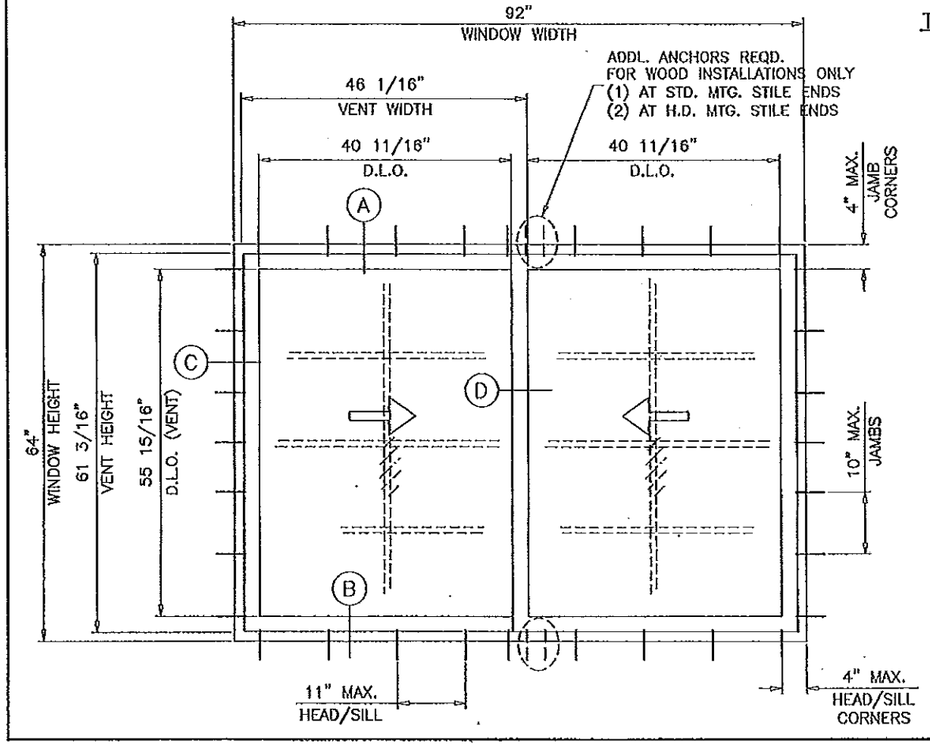

THESE WINDOWS ARE RATED FOR LARGE & SMALL MISSILE IMPACT. SHUTTERS ARE NOT REQUIRED.

ALUMINUM HORIZONTAL ROLLING WINDOW

DESIGN LOAD RATING FOR THESE WINDOWS TO BE AS PER CHARTS SHOWN ON SHEETS 2 AND 3.

APPROVAL APPLIES TO SINGLE UNITS OR SIDE BY SIDE COMBINATIONS OF H.R./H.R. OR HORIZONTAL ROLLING WITH OTHER MIAMI–DADE COUNTY APPR'D WINDOWS USING MIAMI–DADE COUNTY APPROVED MULLIONS IN BETWEEN.
LOWER DESIGN PRESSURE FROM WINDOWS OR MULLION APPROVAL WILL APPLY TO ENTIRE SYSTEM.

THIS PRODUCT HAS BEEN DESIGNED AND TESTED TO COMPLY WITH THE REQUIREMENTS OF THE FLORIDA BUILDING CODE 2010 EDITION INCLUDING HIGH VELOCITY HURRICANE ZONE (HVHZ).

WOOD BUCKS BY OTHERS, MUST BE ANCHORED PROPERLY TO TRANSFER LOADS TO THE STRUCTURE.

ANCHORS SHALL BE AS LISTED, SPACED AS SHOWN ON DETAILS, ANCHORS EMBEDMENT TO BASE MATERIAL SHALL BE BEYOND WALL DRESSING OR STUCCO.

ANCHORING OR LOADING CONDITIONS NOT SHOWN IN THESE DETAILS ARE NOT PART OF THIS APPROVAL.

A LOAD DURATION INCREASE IS USED IN DESIGN OF ANCHORS INTO WOOD ONLY.

MATERIALS INCLUDING BUT NOT LIMITED TO STEEL/METAL SCREWS, THAT COME INTO CONTACT WITH OTHER DISSIMILAR MATERIALS SHALL MEET THE REQUIREMENTS OF 2010 FLORIDA BLDG. CODE SECTION 2003.8.4.

Engr: JAVAD AHMAD
CIVIL
FLA. PE # 70592
C.A.N. 3538
NOV 04 2011

PRODUCT RENEWED
as complying with the Florida
Building Code
Acceptance No 13-0815.08
Expiration Date Dec. 12, 2018
By Manuel Perez
Miami-Dade Product Control

PRODUCT REVISED
as complying with the Florida
Building Code
Acceptance No 12-0208.02
Expiration Date DEC. 18, 2013
By Manuel Perez
Miami-Dade Product Control

AL-FAROOQ CORPORATION
ENGINEERS & PRODUCT DEVELOPMENT
1235 S.W. 87 AVE
MIAMI, FLORIDA 33174
TEL. (305) 264-8100 FAX. (305) 262-6978

COMP–ANL\W03–71EWD

ALUM HORIZONTAL ROLLING WINDOW (L.M.I.)

EUROTECH INDUSTRIES INC.
4201 N.E. 12TH TERRACE
FT. LAUDERDALE, FL. 33334
TEL. (954) 630-9967 FAX. (954) 630-0217

revisions:

no	date	by	description
C	07.27.07		NO CHANGE THIS SHEET
D	08.11.08		UPDATED FOR 2007 FBC
E	11.17.08		NO CHANGE THIS SHEET
F	11.04.11		UPDATED TO 2010 FBC

date: 08–21–03
scale: 1/2"=1'–0"
dr. by: HAMID
chk. by:

drawing no.
W03–71

DESIGN LOAD CAPACITY – PSF				
STANDARD MEETING STILES XO, OX OR XX SIZES				
WINDOW DIMS.		A	GLASS TYPE 'A'	
WIDTH	HEIGHT		EXT.(+)	INT.(–)
26–1/2"	26" (3)	3	75.0	75.0
37"		4	75.0	75.0
53–1/8"		6	75.0	75.0
74"		7	75.0	75.0
25–1/2"	38–3/8" (4)	3	75.0	75.0
36"		4	75.0	75.0
53–1/8"		6	75.0	75.0
74"		7	75.0	75.0
25–1/2"	50–5/8" (6)	3	75.0	75.0
36"		4	75.0	75.0
53–1/8"		6	75.0	75.0
74"		7	75.0	75.0
25–1/2"	63" (7)	3	75.0	75.0
36"		4	75.0	75.0
53–1/8"		6	75.0	75.0
74"		7	75.0	75.0
24"	24" (3)	3	75.0	75.0
36"		4	75.0	75.0
48"		5	75.0	75.0
54"		6	75.0	75.0
60"		6	75.0	75.0
72"		7	75.0	75.0
24"	36" (4)	3	75.0	75.0
36"		4	75.0	75.0
48"		5	75.0	75.0
54"		6	75.0	75.0
60"		6	75.0	75.0
72"		7	75.0	75.0
24"	48" (5)	3	75.0	75.0
36"		4	75.0	75.0
48"		5	75.0	75.0
54"		6	75.0	75.0
60"		6	75.0	75.0
72"		7	75.0	75.0
24"	60" (7)	3	75.0	75.0
36"		4	75.0	75.0
48"		5	75.0	75.0
54"		6	75.0	75.0
60"		6	75.0	75.0
72"		7	75.0	75.0
24"	72" (8)	3	75.0	75.0
36"		4	75.0	75.0
48"		5	75.0	75.0
54"		6	75.0	75.0
60"		6	75.0	75.0
72"		7	75.0	75.0
74"		7	75.0	75.0

A = NO. OF ANCHORS PER HEAD & SILL.
FOR WOOD INSTALLATIONS ADD
(1) ADDITIONAL ANCHOR AT MTG. STILE ENDS.
( ) = NO. OF ANCHORS PER JAMB

DESIGN LOAD CAPACITY – PSF				
STANDARD MEETING STILES XOX OR XXX SIZES				
WINDOW DIMS.		A	GLASS TYPE 'A'	
WIDTH	HEIGHT		EXT.(+)	INT.(–)
74"	26" (3)	7	75.0	75.0
106–1/4"		10	75.0	75.0
74"	38–3/8" (4)	7	75.0	75.0
106–1/4"		10	75.0	75.0
74"	50–5/8" (6)	7	75.0	75.0
106–1/4"		10	75.0	75.0
74"	63" (7)	7	75.0	75.0
106–1/4"		10	75.0	75.0
72"	24" (3)	7	75.0	75.0
84"		8	75.0	75.0
96"		9	75.0	75.0
108"		11	75.0	75.0
120"		12	75.0	75.0
128"		12	75.0	75.0
72"	36" (4)	7	75.0	75.0
84"		8	75.0	75.0
96"		9	75.0	75.0
108"		11	75.0	75.0
120"		12	75.0	75.0
128"		12	75.0	75.0
72"	48" (5)	7	75.0	75.0
84"		8	75.0	75.0
96"		9	75.0	75.0
108"		11	75.0	75.0
120"		12	75.0	75.0
128"		12	75.0	75.0
72"	60" (7)	7	75.0	75.0
84"		8	75.0	75.0
96"		9	75.0	75.0
108"		11	75.0	75.0
120"		12	75.0	75.0
128"		12	75.0	75.0
72"	72" (8)	7	75.0	75.0
84"		8	75.0	75.0
96"		9	75.0	75.0
108"		11	75.0	75.0
111"		11	75.0	75.0

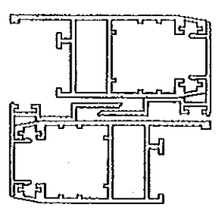

STANDARD MEETING STILES

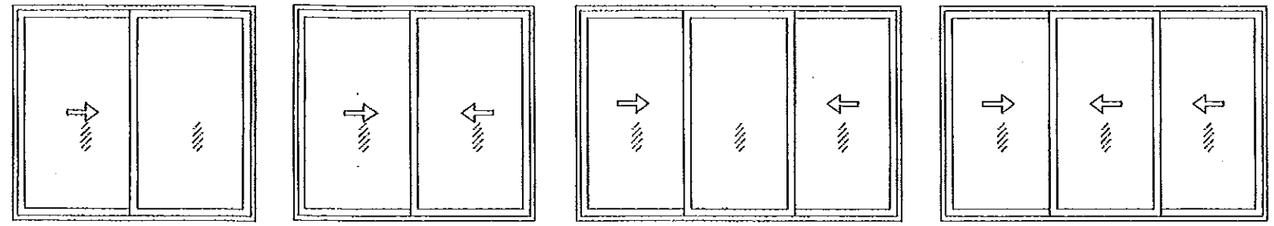

XO
OX

XX

XOX

XXX

APPROVED CONFIGURATIONS STD. MTG. STILES

GLASS WIDTHS TO BE EQUAL ON MOVING AND FIXED LITES

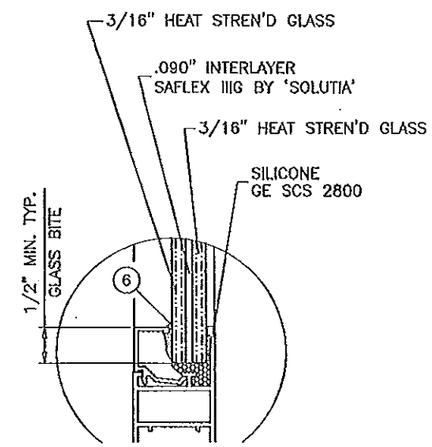

GLASS TYPE 'A'
7/16" OVERALL LAMINATED GLASS

PRODUCT RENEWED
as complying with the Florida
Building Code
Acceptance No. 13-0815.08
Expiration Date Dec. 18, 2018
By Manuel Sosa
Miami Dade Product Control

NOTE:
GLASS CAPACITIES ON THIS SHEET ARE BASED ON ASTM E1300–04 (3 SEC. GUSTS) AND FLORIDA BUILDING COMMISSION DECLARATORY STATEMENT DCA05–DEC–219

ALL EXTERIOR(+) LOADS SHOWN ON THIS SHEET ARE FOR WINDOWS WITH APPLIED RISER AT FRAME SILL.
FOR STD. SILL (NO RISER) LIMIT EXTERIOR(+) LOADS TO 45.0 PSF SEE DETAIL ON SHEET 4.

Engr: JAVAD AHMAD
CIVIL
FLA. PE # 70592
C.A.N. 3538
NOV 07 2011

PRODUCT REVISED
as complying with the Florida
Building Code
Acceptance No 12-0203.02
Expiration Date Dec. 18, 2013
By Manuel Sosa
Miami Dade Product Control

AL-FAROOQ CORPORATION
ENGINEERS & PRODUCT DEVELOPMENT
1235 S.W. 87 AVE
MIAMI, FLORIDA 33174
TEL (305) 264-8100 FAX. (305) 262-6978

COMP–ANL\W03–71EWD

ALUM HORIZONTAL ROLLING WINDOW (L.M.I.)

EUROTECH INDUSTRIES INC.
4201 N.E. 12TH TERRACE
FT. LAUDERDALE, FL. 33334
TEL. (954) 630–9967 FAX. (954) 630–0217

revisions:

no	date	by	description
C	07.27.07		SILL RISER ADDED
D	08.11.08		UPDATED FOR 2007 FBC
E	11.17.08		NO CHANGE THIS SHEET
F	11.04.11		UPDATED TO 2010 FBC

date: 08–21–03
scale: 1/2"=1'–0"
dr. by: HAMID
chk. by:

drawing no.
W03–71

DESIGN LOAD CAPACITY – PSF HEAVY DUTY MEETING STILES XO OR OX SIZES				
WINDOW DIMS.		A	GLASS TYPE 'B'	
WIDTH	HEIGHT		EXT.(+)	INT.(–)
26–1/2"	26" (3)	3	75.0	110.0
37"		4	75.0	110.0
53–1/8"		6	75.0	110.0
74"		7	75.0	110.0
25–1/2"	38–3/8" (4)	3	75.0	110.0
36"		4	75.0	110.0
53–1/8"		6	75.0	110.0
74"		7	75.0	110.0
25–1/2"	50–5/8" (6)	3	75.0	110.0
36"		4	75.0	110.0
53–1/8"		6	75.0	110.0
74"		7	75.0	110.0
25–1/2"	63" (7)	3	75.0	110.0
36"		4	75.0	110.0
53–1/8"		6	75.0	110.0
74"		7	75.0	110.0
24"	24" (3)	3	75.0	110.0
36"		4	75.0	110.0
48"		5	75.0	110.0
54"		6	75.0	110.0
60"		6	75.0	110.0
72"		7	75.0	110.0
84"		8	75.0	110.0
90"		9	75.0	110.0
92"		9	75.0	110.0
24"	36" (4)	3	75.0	110.0
36"		4	75.0	110.0
48"		5	75.0	110.0
54"		6	75.0	110.0
60"		6	75.0	110.0
72"		7	75.0	110.0
84"		8	75.0	110.0
90"		9	75.0	110.0
92"		9	75.0	110.0
24"	48" (5)	3	75.0	110.0
36"		4	75.0	110.0
48"		5	75.0	110.0
54"		6	75.0	110.0
60"		6	75.0	110.0
72"		7	75.0	110.0
84"		8	75.0	110.0
90"		9	75.0	110.0
92"		9	75.0	110.0
24"	60" (7)	3	75.0	110.0
36"		4	75.0	110.0
48"		5	75.0	110.0
54"		6	75.0	110.0
60"		6	75.0	110.0
72"		7	75.0	110.0
84"		8	75.0	110.0
90"		9	75.0	110.0

DESIGN LOAD CAPACITY – PSF HEAVY DUTY MEETING STILES XO OR OX SIZES				
WINDOW DIMS.		A	GLASS TYPE 'B'	
WIDTH	HEIGHT		EXT.(+)	INT.(–)
24"	64" (7)	3	75.0	110.0
36"		4	75.0	110.0
48"		5	75.0	110.0
54"		6	75.0	110.0
60"		6	75.0	110.0
72"		7	75.0	110.0
84"		8	75.0	110.0

A = NO. OF ANCHORS PER HEAD & SILL.
FOR WOOD INSTALLATIONS ADD
(2) ADDITIONAL ANCHORS AT MTG. STILE ENDS.
( ) = NO. OF ANCHORS PER JAMB

DESIGN LOAD CAPACITY – PSF HEAVY DUTY MEETING STILES XOX SIZES				
WINDOW DIMS.		A	GLASS TYPE 'B'	
WIDTH	HEIGHT		EXT.(+)	INT.(–)
74"	26" (3)	7	75.0	110.0
106–1/4"		10	75.0	110.0
74"	38–3/8" (4)	7	75.0	110.0
106–1/4"		10	75.0	110.0
74"	50–5/8" (6)	7	75.0	110.0
106–1/4"		10	75.0	110.0
74"	63" (7)	7	75.0	110.0
106–1/4"		10	75.0	110.0
72"	24" (3)	7	75.0	110.0
84"		8	75.0	110.0
96"		9	75.0	110.0
108"		11	75.0	110.0
120"		12	75.0	110.0
126"		12	75.0	110.0
128"		12	75.0	110.0
72"	36" (4)	7	75.0	110.0
84"		8	75.0	110.0
96"		9	75.0	110.0
108"		11	75.0	110.0
120"		12	75.0	110.0
126"		12	75.0	110.0
128"		12	75.0	110.0
72"	48" (5)	7	75.0	110.0
84"		8	75.0	110.0
96"		9	75.0	110.0
108"		11	75.0	110.0
120"		12	75.0	110.0
126"		12	75.0	110.0
128"		12	75.0	110.0
72"	60" (7)	7	75.0	110.0
84"		8	75.0	110.0
96"		9	75.0	110.0
108"		11	75.0	110.0
120"		12	75.0	110.0
126"		12	75.0	110.0
128"		12	75.0	110.0
72"	64" (7)	7	75.0	110.0
84"		8	75.0	110.0
96"		9	75.0	110.0
108"		11	75.0	110.0
120"		12	75.0	110.0
126"		12	75.0	110.0

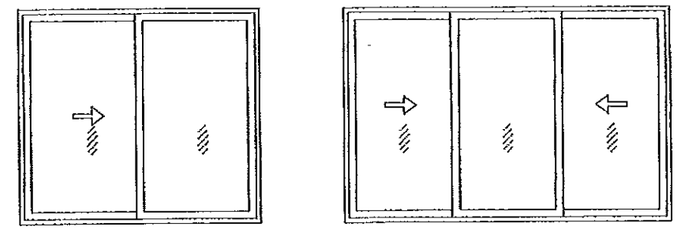

XO
OX

XOX

APPROVED CONFIGURATIONS HEAVY DUTY MTG. STILES

GLASS WIDTHS TO BE EQUAL ON MOVING AND FIXED LITES

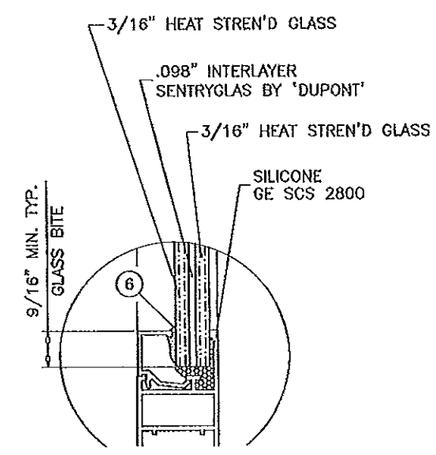

GLASS TYPE 'B'

7/16" OVERALL LAMINATED GLASS

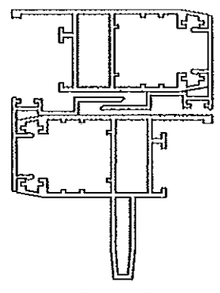

HEAVY DUTY MEETING STILES

PRODUCT RENEWED
as complying with the Florida
Building Code
Acceptance No 13-0815.08
Expiration Date Dec. 12, 2018
By Manuel Diaz
Miami Dade Product Control

NOTE:
GLASS CAPACITIES ON THIS SHEET ARE BASED ON ASTM E1300–04 (3 SEC. GUSTS) AND FLORIDA BUILDING COMMISSION DECLARATORY STATEMENT DCA05–DEC–219

ALL EXTERIOR(+) LOADS SHOWN ON THIS SHEET ARE FOR WINDOWS WITH APPLIED RISER AT FRAME SILL.
FOR STD. SILL (NO RISER) LIMIT EXTERIOR(+) LOADS TO 45.0 PSF SEE DETAIL ON SHEET 4.

Engr: JAVAD AHMAD
CIVIL
FLA. PE # 70592
C.A.N. 3538
NOV 07 2011

PRODUCT REVISED
as complying with the Florida
Building Code
Acceptance No 12-0208.02
Expiration Date DEC. 12, 2013
By Manuel Diaz
Miami Dade Product Control

AL-FAROOQ CORPORATION
ENGINEERS & PRODUCT DEVELOPMENT
1235 S.W. 87 AVE
MIAMI, FLORIDA 33174
TEL. (305) 264-8100 FAX. (305) 262-6978

COMP–ANL\W03–71.EWD

ALUM HORIZONTAL ROLLING WINDOW (L.M.I.)

EUROTECH INDUSTRIES INC.
4201 N.E. 12TH TERRACE
FT. LAUDERDALE, FL. 33334
TEL. (954) 630–9967 FAX. (954) 630–0217

revisions:

no	date	by	description
C	07.27.07		SILL RISER ADDED
D	08.11.08		UPDATED FOR 2007 FBC
E	11.17.08		NO CHANGE THIS SHEET
F	11.04.11		UPDATED TO 2010 FBC

date: 08–21–03
scale: 1/2"=1'–0"
dr. by: HAMID
chk. by:

drawing no.
W03–71

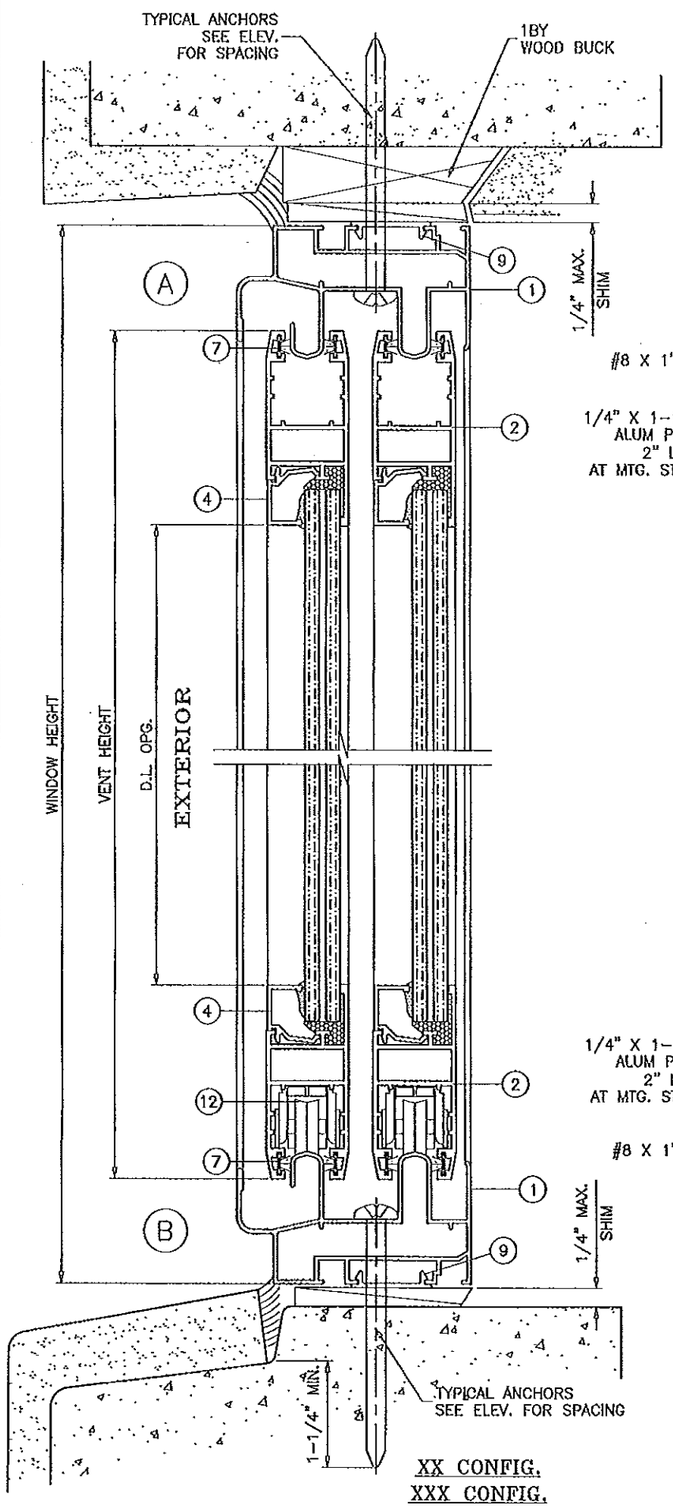

XX CONFIG.
XXX CONFIG.

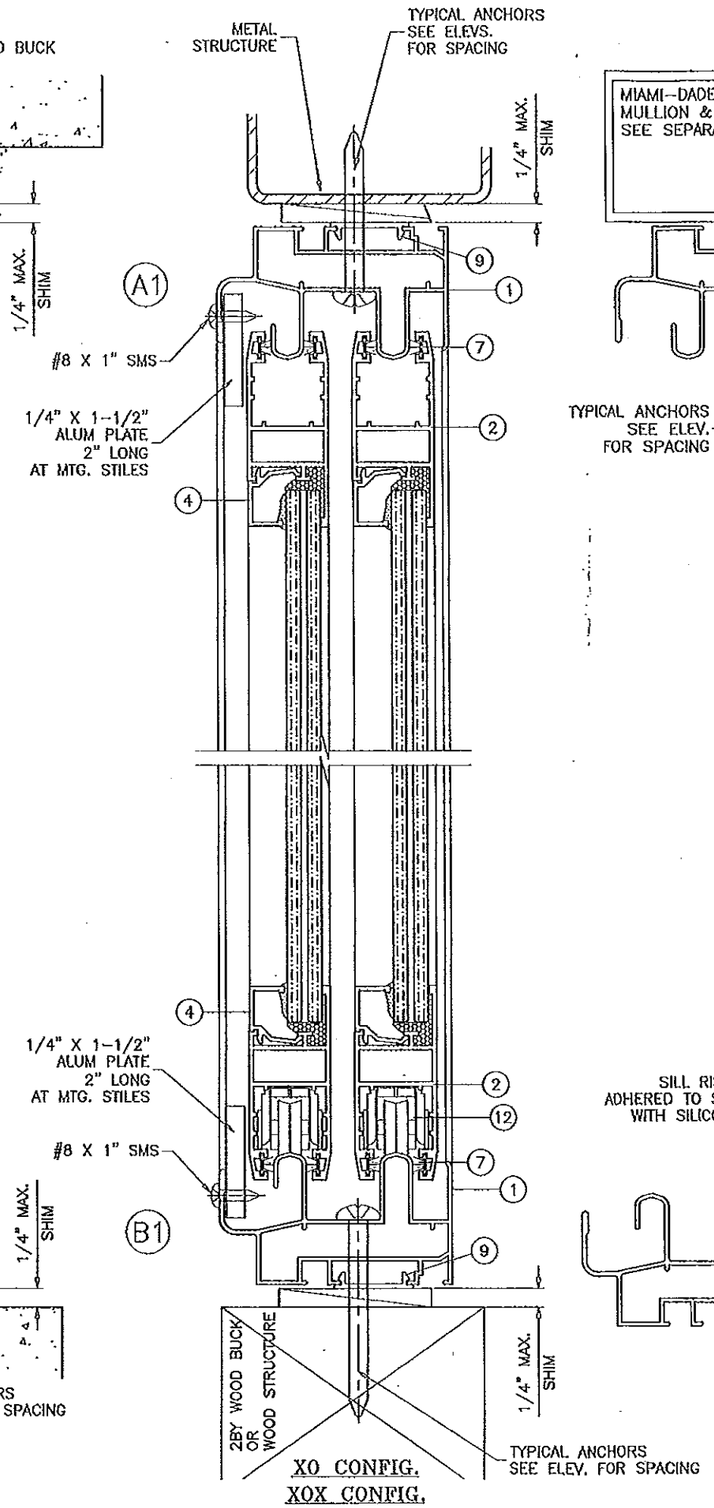

XO CONFIG.
XOX CONFIG.

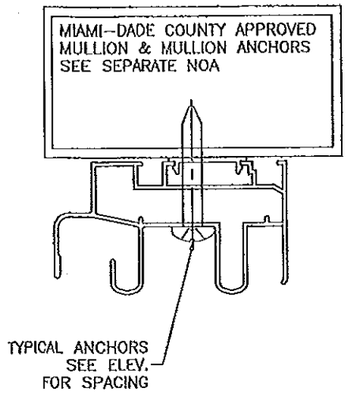

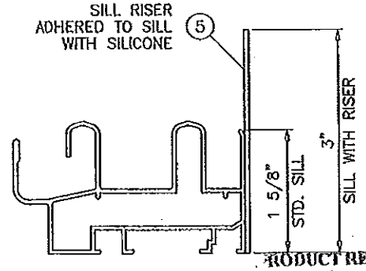

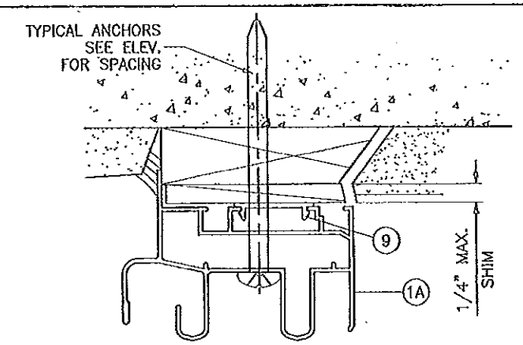

ALT. FLANGE FRAMES CAN BE USED AT ALL ANCHORAGE CONDITIONS.

TYPICAL ANCHORS: SEE ELEV. FOR SPACING

1/4" DIA. ULTRACON BY 'ELCO' (Fu=177 KSI, Fy=155 KSI)

INTO 2BY WOOD BUCKS OR WOOD STRUCTURES
1-1/2" MIN. PENETRATION INTO WOOD

THRU 1BY BUCKS INTO CONC. OR MASONRY
1-1/4" MIN. EMBED INTO CONC. OR MASONRY

DIRECTLY INTO CONC. OR MASONRY
1-1/4" MIN. EMBED INTO CONC. OR MASONRY

1/4" TEKS OR SELF DRILLING SCREWS (GRADE 2 CRS)
INTO METAL STRUCTURES
STEEL : 12 GA. MIN. (Fy = 36 KSI MIN.)
ALUMINUM : 1/8" THK. MIN. (6063-T5 MIN.)
(STEEL IN CONTACT WITH ALUMINUM TO BE PLATED OR PAINTED)

#12 SMS OR SELF DRILLING SCREWS (GRADE 2 CRS)

INTO MIAMI-DADE COUNTY APPROVED MULLIONS (MIN. THK. = .090")
(NO SHIM SPACE)

TYPICAL EDGE DISTANCE

INTO CONCRETE AND MASONRY = 2-1/2" MIN.
INTO WOOD STRUCTURE = 1" MIN.
INTO METAL STRUCTURE = 3/4" MIN.

CONCRETE AT HEAD, SILL OR JAMBS f'c = 3000 PSI MIN.
C-90 HOLLOW/FILLED BLOCK AT JAMBS f'm = 2000 PSI MIN.

WEEPHOLES:

W1 = 1" X 1/4" WEEP HOLE WITH PLASTIC BAFFLE AT 5" FROM EACH END.

WOOD BUCKS AND METAL STRUCTURE NOT BY EUROTECH MUST SUSTAIN LOADS IMPOSED BY GLAZING SYSTEM AND TRANSFER THEM TO THE BUILDING STRUCTURE.

PRODUCT RENEWED
as complying with the Florida Building Code
Acceptance No 12-0815.08
Expiration Date Dec. 16, 2018
By Manuel Diaz
Miami/Dade Product Control

Engr: JAVAD AHMAD
CIVIL
FLA. PE # 70592
C.A.N. 3538
NOV 17 2011

PRODUCT REVISED
as complying with the Florida Building Code
Acceptance No 12-0208.02
Expiration Date DEC. 18, 2013
By Manuel Diaz
Miami/Dade Product Control

AL-FAROOQ CORPORATION
ENGINEERS & PRODUCT DEVELOPMENT
1235 S.W. 87 AVE
MIAMI, FLORIDA 33174
TEL (305) 264-8100 FAX. (305) 262-6978
COMP-ANL\W03-71.EWD

ALUM HORIZONTAL ROLLING WINDOW (L.M.I.)

EUROTECH INDUSTRIES INC.
4201 N.E. 12TH TERRACE
FT. LAUDERDALE, FL. 33334
TEL (954) 630-9967 FAX. (954) 630-0217

revisions:

no	date	by	description
C	07.27.07		SILL RISER ADDED
D	08.11.08		UPDATED FOR 2007 FBC
E	11.17.08		REV. PER BCCO COMMENTS
F	11.04.11		NO CHANGE THIS SHEET

date: 08-21-03
scale: 1/2" = 1"
dr. by: HAMID
chk. by:

drawing no.
W03-71

sheet 4 of 7

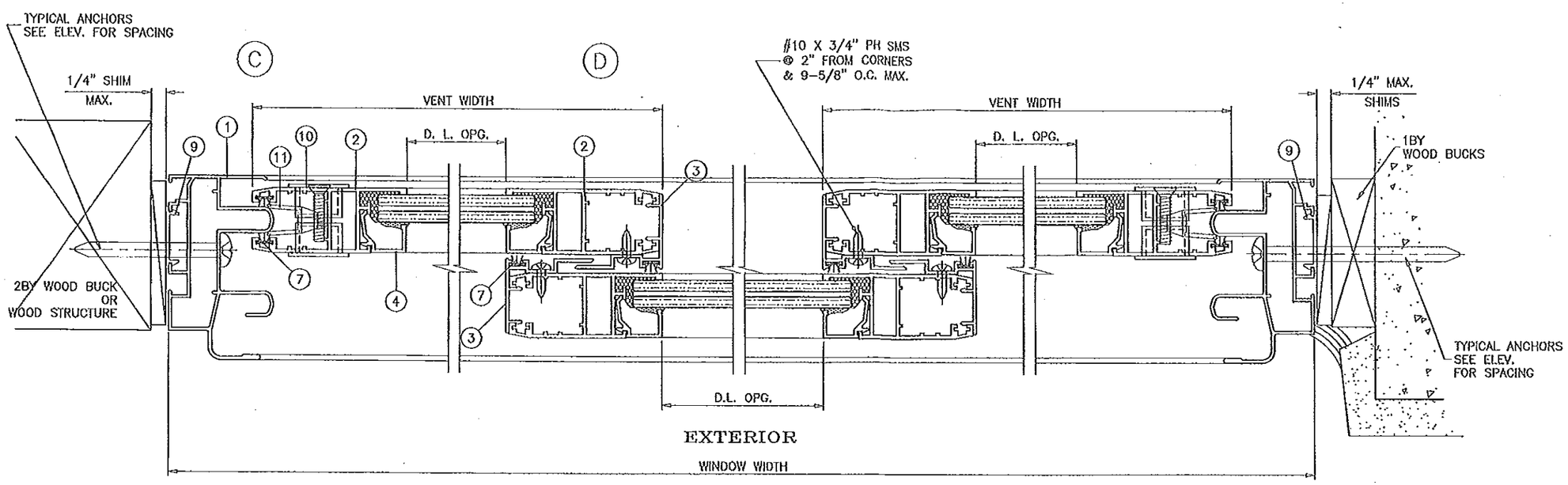

XXX LAYOUT

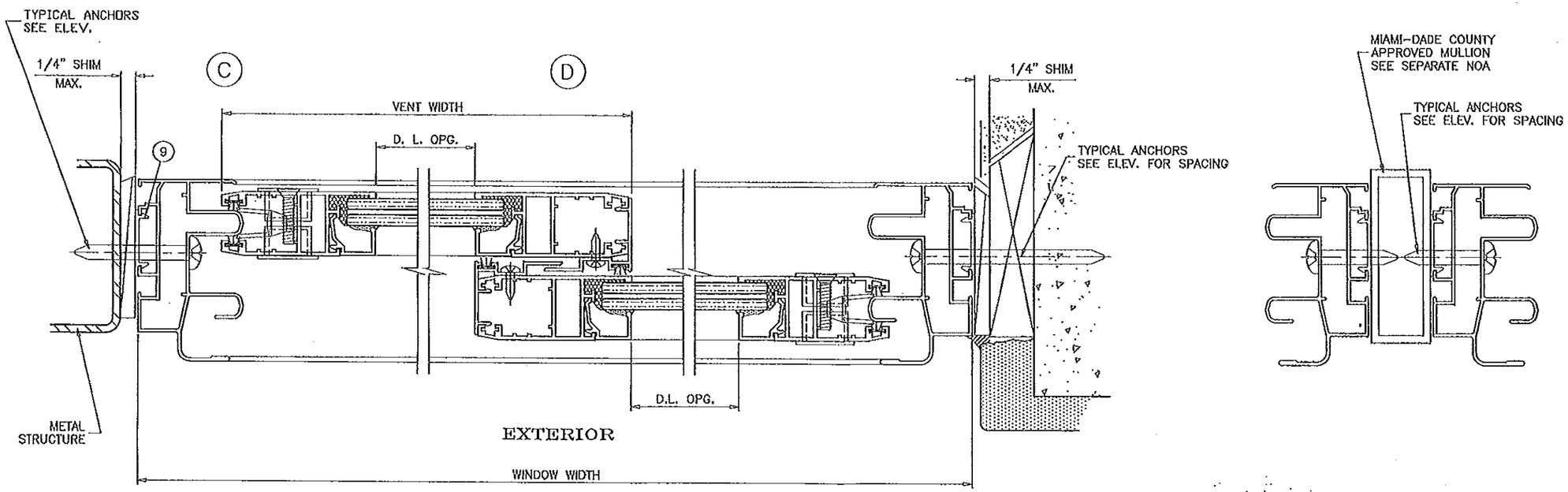

XX LAYOUT

PRODUCT RENEWED
as complying with the Florida
Building Code
Acceptance No. 13-0815.08
Expiration Date Dec 18, 2018
By Manuel Perez
Miami-Dade Product Control

Engr: JAVAD AHMAD
CIVIL
FLA. PE # 70592
C.A.N. 3538
NOV 07 2011

PRODUCT REVISED
as complying with the Florida
Building Code
Acceptance No 12-0208.02
Expiration Date DEC. 18, 2013
By Manuel Perez
Miami-Dade Product Control

AL-FAROOQ CORPORATION
ENGINEERS & PRODUCT DEVELOPMENT
1235 S.W. 87 AVE
MIAMI, FLORIDA 33174
TEL. (305) 264-8100 FAX. (305) 262-6978

COMP-ANL\W03-71.EWD

ALUM HORIZONTAL ROLLING WINDOW (L.M.I.)

EUROTECH INDUSTRIES INC.
4201 N.E. 12TH TERRACE
FT. LAUDERDALE, FL. 33334
TEL (954) 630-9967 FAX. (954) 630-0217

revisions:

no	date	by	description
C	07.27.07		NO CHANGE THIS SHEET
D	08.11.08		UPDATED FOR 2007 FBC
E	11.17.08		NO CHANGE THIS SHEET
F	11.04.11		NO CHANGE THIS SHEET

date: 08-21-03
scale: 1/2" = 1"
dr. by: HAMID
chk. by:

drawing no.
W03-71

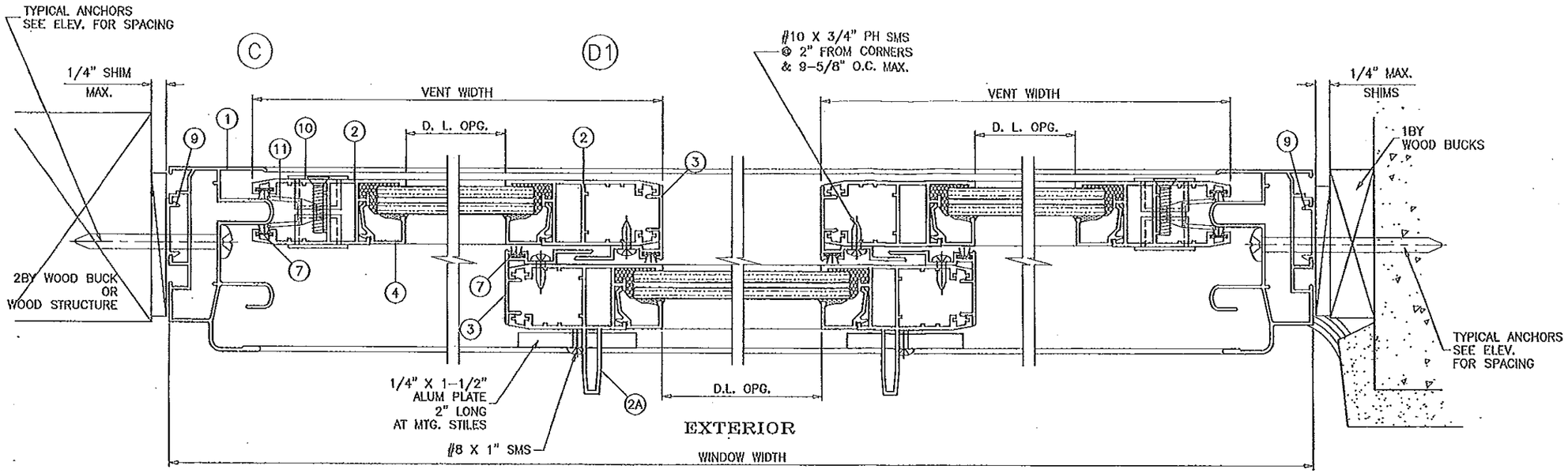

XOX LAYOUT

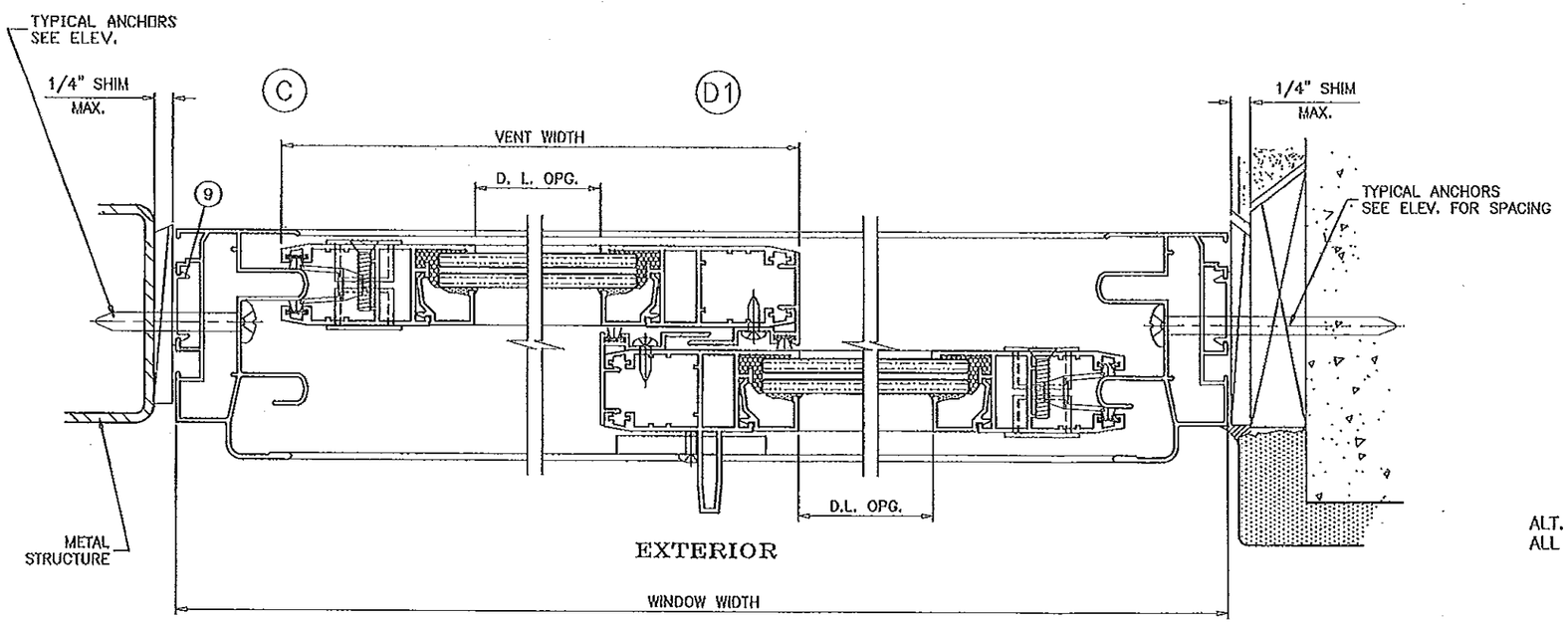

XO LAYOUT

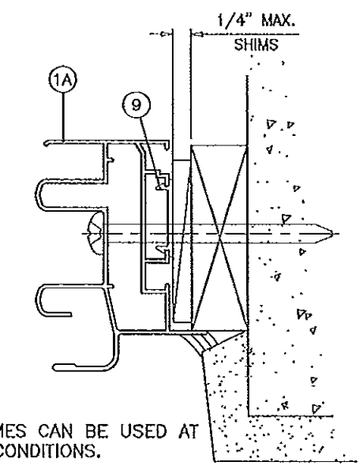

ALT. FLANGE FRAMES CAN BE USED AT
ALL ANCHORAGE CONDITIONS.

PRODUCT RENEWED
as complying with the Florida
Building Code
Acceptance No 13-0815.08
Expiration Date Dec. 18, 2018
By Manuel Perez
Miami Dade Product Control

Engr: JAWAD AHMAD
CIVIL
FLA. PE # 70592
C.A.N. 3536
NOV 2011

PRODUCT REVISED
as complying with the Florida
Building Code
Acceptance No 12-0208.02
Expiration Date DEC. 18, 2013
By Manuel Perez
Miami Dade Product Control

AL-FAROOQ CORPORATION
ENGINEERS & PRODUCT DEVELOPMENT
1235 S.W. 87 AVE
MIAMI, FLORIDA 33174
TEL. (305) 264-8100 FAX. (305) 262-6973
COMP-ANL\W03-71EWD

ALUM HORIZONTAL ROLLING WINDOW (L.M.I.)

EUROTECH INDUSTRIES INC.
4201 N.E. 12TH TERRACE
FT. LAUDERDALE, FL 33334
TEL (954) 630-9967 FAX. (954) 630-0217

revisions:

no	date	by	description
C	07.27.07		NO CHANGE THIS SHEET
D	08.11.08		UPDATED FOR 2007 FBC
E	11.17.08		NO CHANGE THIS SHEET
F	11.04.11		NO CHANGE THIS SHEET

date: 08-21-03
scale: 1/2" = 1"
dr. by: HAMID
chk. by:

drawing no.
W03-71

sheet 6 of 7

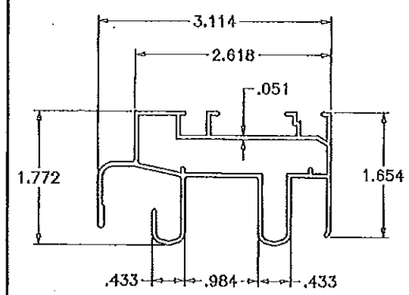

WINDOW FRAME

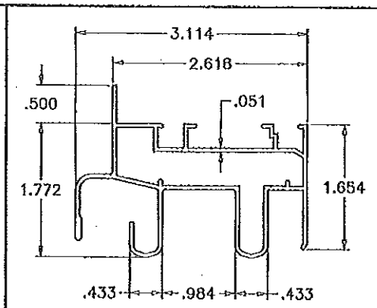

ALT. FLANGE FRAME

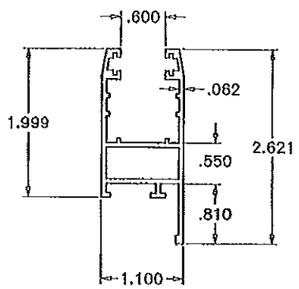

VENT TOP/BOTTOM RAIL, JAMB STILE
STD. MTG. STILE

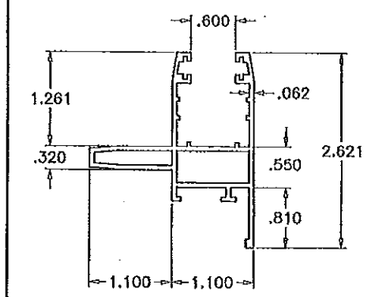

HEAVY DUTY MTG. STILE

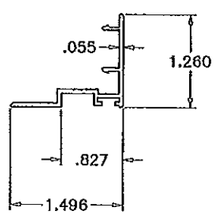

INTERLOCK ADAPTER

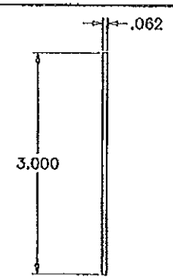

SILL RISER

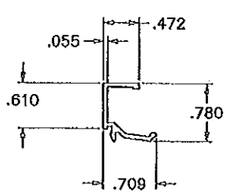

GLAZING BEAD

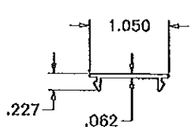

FILLER PLATE

ITEM	PART #	QUANTITY	DESCRIPTION	MATERIAL	MANF./SUPPLIER/REMARKS
1	VZ-1978	4	WINDOW FRAME	6063-T6	--
1A	--	4	ALT. FLANGE FRAME	6063-T6	--
2	VZ-1930	4	VENT TOP/BOTTOM RAIL, JAMB STILE, STD. MTG. STILE	6063-T6	--
2A	GAH-48178	AS REQD.	HEAVY DUTY MTG. STILE	6063-T6	--
3	VZ-1906	AS REQD.	INTERLOCK ADAPTER	6063-T6	--
4	VZ-1933	AS REQD.	GLAZING BEAD	6063-T6	--
5	--	AS REQD.	SILL RISER	ALUMINUM	--
6	2801	AS REQD.	WEDGE GASKET	EPDM	DUROMETER 75±5 SHORE A
7	PB-69-550-HFB-C	AS REQD.	PILE WITH PLASTIC FIN W'STRIPPING	--	FINSEAL
8	--	--	--	--	--
9	--	AS REQD.	FILLER PLATE, 2-1/2" LONG AT ANCHOR LOCATIONS	6063-T6	--
10	2963	1/ VENT	LEVER TYPE FACE MOUNT LOCK	STEEL	GIESSE
11	4896	1/ VENT	LOCK KEEPERS	STEEL	GIESSE
12	3125	2/ VENT	ROLLER ASSEMBLY	--	GIESSE
13	1103	1/ CORNER	CLIP-ON CORNER JOINT	ALUMINUM	GIESSE
14	1160	1/ CORNER	VENT CORNER KEY	ALUMINUM	GIESSE

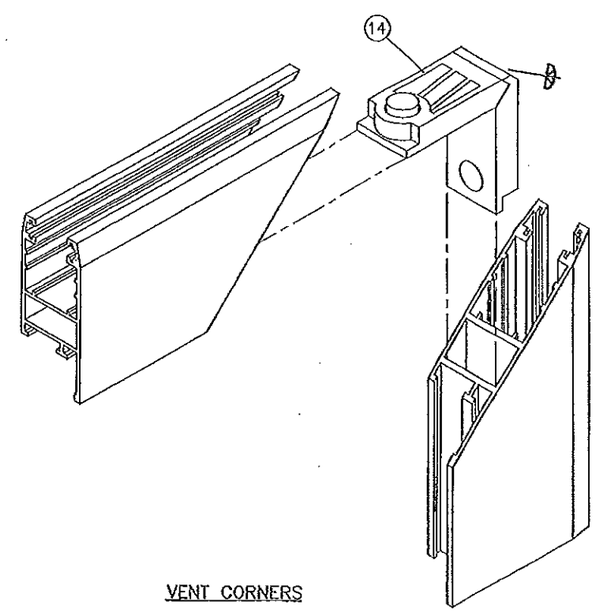

VENT CORNERS

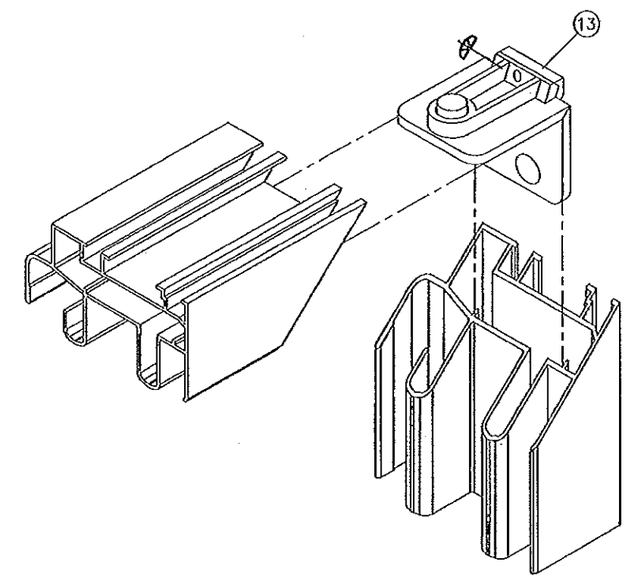

FRAME CORNERS

PRODUCT RENEWED
as complying with the Florida
Building Code
Acceptance No 13-0815.08
Expiration Date Dec. 12, 2018
By Manuel Perez
Miami-Dade Product Control

Engr: JAVAD AHMADI
CIVIL
FLA. P.E. # 70592
C.A.N. 3538
NOV 07 2011

PRODUCT REVISED
as complying with the Florida
Building Code
Acceptance No 12-0209.07
Expiration Date Dec. 12, 2013
By Manuel Perez
Miami-Dade Product Control

AL-FAROOQ CORPORATION
ENGINEERS & PRODUCT DEVELOPMENT
1235 S.W. 87 AVE
MIAMI, FLORIDA 33174
TEL. (305) 264-8100 FAX. (305) 262-6978

COMP-ANL\W03-71EWD

ALUM HORIZONTAL ROLLING WINDOW (L.M.I.)

EUROTECH INDUSTRIES INC.
4201 N.E. 12TH TERRACE
FT. LAUDERDALE, FL. 33334
TEL (954) 630-9967 FAX. (954) 630-0217

revisions:

no	date	by	description
C	07.27.07		SILL RISER ADDED
D	08.11.08		UPDATED FOR 2007 FBC
E	11.17.08		NO CHANGE THIS SHEET
F	11.04.11		DURO ADDED

date: 08-21-03
scale: 1/2" = 1"
dr. by: HAMID
chk. by:

drawing no.
W03-71

sheet 7 of 7