MIAMI-DADE COUNTY
DEPARTMENT OF REGULATORY AND ECONOMIC RESOURCES (RER)
BOARD AND CODE ADMINISTRATION DIVISION

MIAMI-DADE COUNTY
PRODUCT CONTROL SECTION
11805 SW 26 Street, Room 208
T (786) 315-2590 F (786) 315-2599
www.miamidade.gov/economy

NOTICE OF ACCEPTANCE (NOA)

WinDoor, Inc.
7500 Amsterdam Drive
Orlando, FL 32832

SCOPE:

This NOA is being issued under the applicable rules and regulations governing the use of construction materials. The documentation submitted has been reviewed and accepted by Miami-Dade County RER - Product Control Section to be used in Miami Dade County and other areas where allowed by the Authority Having Jurisdiction (AHJ).

This NOA shall not be valid after the expiration date stated below. The Miami-Dade County Product Control Section (In Miami Dade County) and/or the AHJ (in areas other than Miami Dade County) reserve the right to have this product or material tested for quality assurance purposes. If this product or material fails to perform in the accepted manner, the manufacturer will incur the expense of such testing and the AHJ may immediately revoke, modify, or suspend the use of such product or material within their jurisdiction. RER reserves the right to revoke this acceptance, if it is determined by Miami-Dade County Product Control Section that this product or material fails to meet the requirements of the applicable building code.

This product is approved as described herein, and has been designed to comply with the Florida Building Code, including the High Velocity Hurricane Zone.

DESCRIPTION: Series "9000 Shallow 180° Thermally Broken" Clipped, Horizontal Aluminum Tube Mullion - L.M.I.

APPROVAL DOCUMENT: Drawing No. **08-02201**, titled "9000 Series Shallow Horizontal Mullion – LMI & SMI", sheets 1 through 11 of 11, dated 08/15/13, with revision C dated 09/17/15, prepared by manufacturer, signed and sealed by Luis R. Lomas, P.E., bearing the Miami-Dade County Product Control Approval stamp with the Notice of Acceptance number and approval date by the Miami-Dade County Product Control Section.

MISSILE IMPACT RATING: Large and Small Missile Impact Resistant

LABELING: Each unit shall bear a permanent label with the manufacturer's name or logo, city, state, model/series, and following statement: "Miami-Dade County Product Control Approved", unless otherwise noted herein.

RENEWAL of this NOA shall be considered after a renewal application has been filed and there has been no change in the applicable building code negatively affecting the performance of this product.

TERMINATION of this NOA will occur after the expiration date or if there has been a revision or change in the materials, use, and/or manufacture of the product or process. Misuse of this NOA as an endorsement of any product, for sales, advertising or any other purposes shall automatically terminate this NOA. Failure to comply with any section of this NOA shall be cause for termination and removal of NOA.

ADVERTISEMENT: The NOA number preceded by the words Miami-Dade County, Florida, and followed by the expiration date may be displayed in advertising literature. If any portion of the NOA is displayed, then it shall be done in its entirety.

INSPECTION: A copy of this entire NOA shall be provided to the user by the manufacturer or its distributors and shall be available for inspection at the job site at the request of the Building Official.

This NOA consists of this page 1 and evidence pages E-1 and E-2, as well as approval document mentioned above.

The submitted documentation was reviewed by **Manuel Perez, P.E.**

MIAMI-DADE COUNTY APPROVED

10/02/15

WinDoor, Inc.

NOTICE OF ACCEPTANCE: EVIDENCE SUBMITTED

A. DRAWINGS

1. Manufacturer's die drawings and sections.
2. Drawing No. **08-02201**, titled "9000 Series Shallow Horizontal Mullion – LMI & SMI", sheets 1 through 11 of 11, dated 08/15/13, with revision C dated09/17/15, prepared by manufacturer, signed and sealed by Luis R. Lomas, P.E.

B. TESTS

1. Test reports on: 1) Uniform Static Air Pressure Test, Loading per FBC TAS 202-94
   2) Large Missile Impact Test per FBC, TAS 201-94
   3) Cyclic Wind Pressure Loading per FBC, TAS 203-94

   along with marked-up drawings and installation diagram of a series 9020 horizontal shallow thermally broken aluminum mullion as a transom to two mulled series 9020 thermally broken aluminum fixed windows, prepared by National Certified Testing Laboratories, Test Report No. **NCTL-210-3995-01**, dated 01/26/15, signed and sealed by Gerard J. Ferrara, P.E.

C. CALCULATIONS:

1. Anchor verification calculations and structural analysis, complying with **FBC 5th Edition (2014)**, dated 08/15/13 and 09/11/15, prepared, signed and sealed by Luis R. Lomas, P.E.

D. QUALITY ASSURANCE

1. Miami-Dade Department of Regulatory and Economic Resources (RER)

E. MATERIAL CERTIFICATIONS

1. Material Data Sheet for "insulating profiles made of PA 66 GF25 – dry impact resistant, to fit into Technoform I-Strut™ Aluminum Standard Reglet.
2. Test report No. **ATI–61261.01–106-18**, prepared by Architectural Testing, Inc., dated 12/08/05, with revision date 01/04/06, issued to **Technoform**, for their **I-Strut Insulating Strip** comprised of Polyamide with 25% glass fibers, per **ASTM D635–03** "Standard Test Method for Rate of Burning and/or Extent and Time of Burning of Plastics in a Horizontal Position" and ASTM **D2843–99** "Standard Test Method for the Density of Smoke from the Burning Decomposition of Plastics", signed and sealed by Joseph A. Reed, P.E.

Manuel Perez

Manuel Perez, P.E.
Product Control Examiner
NOA No. 13-0827.09
Expiration Date: October 08, 2020
Approval Date: October 08, 2015

NOTICE OF ACCEPTANCE: EVIDENCE SUBMITTED

E. MATERIAL CERTIFICATIONS (CONTINUED)

3. Test report No. **ETC–07–1043–19094.0**, prepared by ETC Laboratories, dated 02/04/08, issued to Technoform Bautec NA, Inc., for their **I-Strut Insulating Strip** comprised of Polyamide with 25% glass fibers, per **ASTM D638–03** *"Standard Test Methods for Tensile Properties of Plastics"*, for exposed & unexposed sample per Xenon Arc after 4500 Hours, signed and sealed by Joseph Labora Doldan, P.E.
4. Test report No. **ETC–08–1043–20974.0**, prepared by ETC Laboratories, dated 07/01/08, issued to Technoform, for their **I-Strut Insulating Strip** comprised of Polyamide with 25% glass fibers, per **ASTM D1929–96** *"Standard Test Method for Ignition Properties of Plastics"*, signed and sealed by Joseph Doldan, P.E.

F. STATEMENTS

1. Statement letter of conformance, complying with the **FBC 5th Edition (2014)** and of no financial interest, dated April 8, 2015, signed and sealed by Luis R. Lomas, P.E.
2. Proposal **#11-1698** issued by Product Control on 02/28/12 signed by Manuel Perez, P.E.

G. OTHERS

1. None.

Manuel Perez

Manuel Perez, P.E.
Product Control Examiner
NOA No. 13-0827.09
Expiration Date: October 08, 2020
Approval Date: October 08, 2015

NOTES:

1. THE PRODUCT SHOWN HEREIN IS DESIGNED AND MANUFACTURED TO COMPLY WITH REQUIREMENTS OF THE FLORIDA BUILDING CODE INCLUDING THE HVHZ.
2. WOOD FRAMING TO BE DESIGNED AND ANCHORED TO PROPERLY TRANSFER ALL LOADS TO STRUCTURE. FRAMING IS THE RESPONSIBILITY OF THE ARCHITECT OR ENGINEER OF RECORD.
3. ALLOWABLE STRESS INCREASE OF 1/3 WAS NOT USED IN THE DESIGN OF THE PRODUCT SHOWN HEREIN. WIND LOAD DURATION FACTOR Cd=1.6 WAS USED FOR WOOD ANCHOR CALCULATIONS.
4. APPROVED IMPACT PROTECTIVE SYSTEM IS NOT REQUIRED FOR THIS PRODUCT IN WIND BORNE DEBRIS REGIONS.
5. DESIGN PRESSURE AND INSTALLATION DETAILS SHOWN IN THIS DOCUMENT APPLY ONLY TO MULLION. FENESTRATION UNITS MUST BE APPROVED UNDER SEPARATE APPROVAL.
6. SINGLE FENESTRATION UNITS TO BE MULLED ARE NOT LIMITED TO THOSE SHOWN IN THIS DRAWING. FENESTRATION UNITS MUST BE MANUFACTURED BY WinDoor INC.
7. DESIGN PRESSURE OF MULLED UNIT SHALL BE CONTROLLED BY THE LESSER DESIGN PRESSURE OF THE MULLION OR THE INDIVIDUAL FENESTRATION UNIT.

ANCHORING NOTES:

1. FOR ANCHORING INTO WOOD FRAMING OR 2X BUCK USE #12 WOOD SCREW WITH SUFFICIENT LENGTH TO ACHIEVE A 1 3/8" MINIMUM EMBEDMENT WITH 9/16" MINIMUM EDGE DISTANCE. LOCATE ANCHORS AS SHOWN IN INSTALLATION DETAILS.
2. FOR ANCHORING INTO MASONRY/CONCRETE USE 1/4" CRETE-FLEX TAPCON WITH SUFFICIENT LENGTH TO ACHIEVE A 1 3/4" MINIMUM EMBEDMENT WITH 2 1/2" MINIMUM EDGE DISTANCE. LOCATE ANCHORS AS SHOWN IN INSTALLATION DETAILS.
3. FOR ANCHORING INTO METAL STRUCTURE USE #12 SMS OR SELF DRILLING SCREWS WITH SUFFICIENT LENGTH TO ACHIEVE 3 THREADS MINIMUM BEYOND STRUCTURE INTERIOR WALL WITH 7/8" MINIMUM EDGE DISTANCE. LOCATE ANCHORS AS SHOWN IN ELEVATIONS AND INSTALLATION DETAILS.
4. ALL FASTENERS TO BE CORROSION RESISTANT.
5. INSTALLATION ANCHORS SHALL BE INSTALLED IN ACCORDANCE WITH ANCHOR MANUFACTURER'S INSTALLATION INSTRUCTIONS, AND ANCHORS SHALL NOT BE USED IN SUBSTRATES WITH STRENGTHS LESS THAN THE MINIMUM STRENGTH SPECIFIED BELOW:
   A. WOOD – MINIMUM SPECIFIC GRAVITY OF G=0.42
   B. CONCRETE – MINIMUM COMPRESSIVE STRENGTH OF 3,200 PSI.
   C. MASONRY – STRENGTH CONFORMANCE TO ASTM C-90, GRADE N, TYPE 1 (OR GREATER).
   D. METAL STRUCTURE: STEEL 18GA, 33KSI OR ALUMINUM 6063-T5 1/8" THICK MINIMUM.

REVISIONS

REV	DESCRIPTION	DATE	APPROVED
A	CHANGED MULLION PROFILE	03/02/14	R.L.
B	REVISED PER NEW TESTING	06/29/15	R.L.
C	ADDED CHARTS	09/17/15	R.L.

TABLE OF CONTENTS

SIGNED: 09/17/2015

Approved as complying with the Florida Building Code
Date Oct. 8, 2015
NOA# 13-0627.09
Miami Dade Product Control
By Manuel Perez

WinDoor INCORPORATED
7500 AMSTERDAM DRIVE
ORLANDO, FL 32832
Phone: 407.481.8400
Fax: 407.481.0505
www.windoorinc.com

9000 SERIES SHALLOW HORIZONTAL MULLION
LMI & SMI
NOTES

DRAWN:	DWG NO.	REV
J.L.	08-02201	C

SCALE NTS | DATE 08/15/13 | SHEET 1 OF 11

LUIS R. LOMAS LICENSE No. 6251 STATE OF FLORIDA PROFESSIONAL ENGINEER

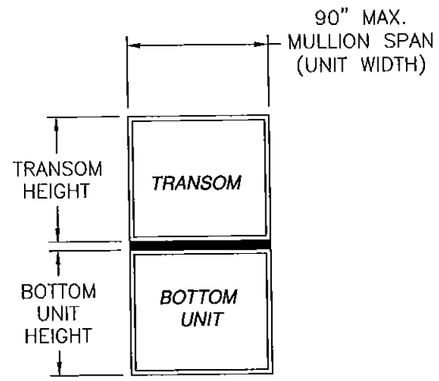

DESIGN PRESSURES SHOWN IN CHARTS ARE FOR POSITIVE AND NEGATIVE DESIGN PRESSURES.

REVISIONS			
REV	DESCRIPTION	DATE	APPROVED
A	CHANGED MULLION PROFILE	03/02/14	R.L.
B	REVISED PER NEW TESTING	06/29/15	R.L.
C	ADDED CHARTS	09/17/15	R.L.

CHART 1
18" TRANSOM

Maximum design pressure capacity chart (psf)
Units installed into masonry/concrete substrate

Height (in)		Mullion Span (Unit width) (in)							
Bottom	Transom	48.0	54.0	60.0	66.0	72.0	78.0	84.0	90.0
60.0	18.0	175.0	175.0	175.0	166.3	145.0	128.6	115.5	104.8
66.0	18.0	175.0	175.0	175.0	165.4	142.9	125.8	112.4	101.5
72.0	18.0	175.0	175.0	175.0	165.4	142.2	124.2	110.3	99.1
78.0	18.0	175.0	175.0	175.0	165.4	142.2	123.7	109.0	97.5
84.0	18.0	175.0	175.0	175.0	165.4	142.2	123.7	108.6	96.5
90.0	18.0	175.0	175.0	175.0	165.4	142.2	123.7	108.6	96.2
96.0	18.0	175.0	175.0	175.0	165.4	142.2	123.7	108.6	96.2
102.0	18.0	175.0	175.0	175.0	165.4	142.2	123.7	108.6	96.2
108.0	18.0	175.0	175.0	175.0	165.4	142.2	123.7	108.6	96.2
114.0	18.0	175.0	175.0	175.0	165.4	142.2	123.7	108.6	96.2
120.0	18.0	175.0	175.0	175.0	165.4	142.2	123.7	108.6	96.2

IMPACT RATING: LARGE AND SMALL MISSILE IMPACT
MISSILE LEVEL D, WIND ZONE 4 AND HVHZ

CHART 2
24" TRANSOM

Maximum design pressure capacity chart (psf)
Units installed into masonry/concrete substrate

Height (in)		Mullion Span (Unit width) (in)							
Bottom	Transom	48.0	54.0	60.0	66.0	72.0	78.0	84.0	90.0
60.0	24.0	175.0	175.0	175.0	153.3	133.8	118.7	106.7	96.8
66.0	24.0	175.0	175.0	175.0	152.5	132.0	116.4	104.0	94.1
72.0	24.0	175.0	175.0	175.0	152.5	131.4	115.0	102.2	92.0
78.0	24.0	175.0	175.0	175.0	152.5	131.4	114.6	101.2	90.6
84.0	24.0	175.0	175.0	175.0	152.5	131.4	114.6	100.8	89.8
90.0	24.0	175.0	175.0	175.0	152.5	131.4	114.6	100.8	89.5
96.0	24.0	175.0	175.0	175.0	152.5	131.4	114.6	100.8	89.5
102.0	24.0	175.0	175.0	175.0	152.5	131.4	114.6	100.8	89.5
108.0	24.0	175.0	175.0	175.0	152.5	131.4	114.6	100.8	89.5
114.0	24.0	175.0	175.0	175.0	152.5	131.4	114.6	100.8	89.5
120.0	24.0	175.0	175.0	175.0	152.5	131.4	114.6	100.8	89.5

IMPACT RATING: LARGE AND SMALL MISSILE IMPACT
MISSILE LEVEL D, WIND ZONE 4 AND HVHZ

CHART 3
30" TRANSOM

Maximum design pressure capacity chart (psf)
Units installed into masonry/concrete substrate

Height (in)		Mullion Span (Unit width) (in)							
Bottom	Transom	48.0	54.0	60.0	66.0	72.0	78.0	84.0	90.0
60.0	30.0	175.0	175.0	168.2	143.6	125.3	111.1	99.8	90.6
66.0	30.0	175.0	175.0	168.2	142.9	123.7	109.0	97.5	88.1
72.0	30.0	175.0	175.0	168.2	142.9	123.2	107.8	95.9	86.3
78.0	30.0	175.0	175.0	168.2	142.9	123.2	107.4	95.0	85.1
84.0	30.0	175.0	175.0	168.2	142.9	123.2	107.4	94.7	84.4
90.0	30.0	175.0	175.0	168.2	142.9	123.2	107.4	94.7	84.1
96.0	30.0	175.0	175.0	168.2	142.9	123.2	107.4	94.7	84.1
102.0	30.0	175.0	175.0	168.2	142.9	123.2	107.4	94.7	84.1
108.0	30.0	175.0	175.0	168.2	142.9	123.2	107.4	94.7	84.1
114.0	30.0	175.0	175.0	168.2	142.9	123.2	107.4	94.7	84.1
120.0	30.0	175.0	175.0	168.2	142.9	123.2	107.4	94.7	84.1

IMPACT RATING: LARGE AND SMALL MISSILE IMPACT
MISSILE LEVEL D, WIND ZONE 4 AND HVHZ

CHART 4
36" TRANSOM

Maximum design pressure capacity chart (psf)
Units installed into masonry/concrete substrate

Height (in)		Mullion Span (Unit width) (in)							
Bottom	Transom	48.0	54.0	60.0	66.0	72.0	78.0	84.0	90.0
60.0	36.0	175.0	175.0	160.0	136.3	118.7	105.1	94.4	85.6
66.0	36.0	175.0	175.0	160.0	135.7	117.3	103.3	92.3	83.4
72.0	36.0	175.0	175.0	160.0	135.7	116.8	102.2	90.9	81.8
78.0	36.0	175.0	175.0	160.0	135.7	116.8	101.9	90.0	80.7
84.0	36.0	175.0	175.0	160.0	135.7	116.8	101.9	89.8	80.0
90.0	36.0	175.0	175.0	160.0	135.7	116.8	101.9	89.8	79.8
96.0	36.0	175.0	175.0	160.0	135.7	116.8	101.9	89.8	79.8
102.0	36.0	175.0	175.0	160.0	135.7	116.8	101.9	89.8	79.8
108.0	36.0	175.0	175.0	160.0	135.7	116.8	101.9	89.8	79.8
114.0	36.0	175.0	175.0	160.0	135.7	116.8	101.9	89.8	79.8
120.0	36.0	175.0	175.0	160.0	135.7	116.8	101.9	89.8	79.8

IMPACT RATING: LARGE AND SMALL MISSILE IMPACT
MISSILE LEVEL D, WIND ZONE 4 AND HVHZ

DESIGN PRESSURE TABLE INSTRUCTIONS:

1. DEFINE REQUIRED DESIGN LOAD PER FLORIDA BUILDING CODE CHAPTER 16.
2. DETERMINE MULLION SPAN BASED ON PRODUCT TO BE INSTALLED.
3. TO DETERMINE MULLION RATING LOCATE MULLION SPAN COLUMN AND BOTTOM UNIT HEIGHT ROW. RATING FOR MULLION IS LOCATED AT INTERSECTION OF COLUMN (MULLION SPAN) AND ROW (BOTTOM UNIT HEIGHT).
4. MULLION RATING MUST BE EQUAL OR GREATER THAN REQUIRED DESIGN PRESSURE OBTAINED IN STEP 1.
5. IF TRANSOM TO BE INSTALLED IS NOT LISTED IN THESE CHARTS GO TO NEXT HIGHER TRANSOM CHART. FOR EXAMPLE IF TRANSOM TO BE INSTALLED IS 20" HIGH THEN USE CHART FOR 24" TRANSOM.
6. WINDOW/DOOR AND TRANSOMS TO BE ANCHORED ON ALL FOUR SIDES.

SIGNED: 09/17/2015

Approved as complying with the Florida Building Code
Date Oct. 8, 2015
NOA# 13-0627.09
Miami Dade Product Control
By Manuel Perez

WinDoor INCORPORATED
7500 AMSTERDAM DRIVE
ORLANDO, FL 32832
Phone: 407.481.8400
Fax: 407.481.0505
www.windoorinc.com

9000 SERIES SHALLOW HORIZONTAL MULLION
LMI & SMI
SINGLE UNIT WITH TRANSOM

DRAWN:	DWG NO.	REV
J.L.	08-02201	C
SCALE NTS	DATE 08/15/13	SHEET 2 OF 11

LUIS R. LOMAS
LICENSE No. 62514
STATE OF FLORIDA
PROFESSIONAL ENGINEER

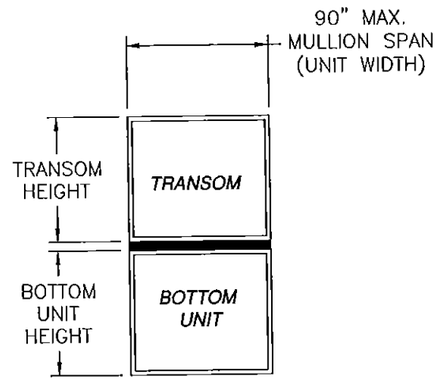

DESIGN PRESSURES SHOWN IN CHARTS ARE FOR POSITIVE AND NEGATIVE DESIGN PRESSURES.

REVISIONS			
REV	DESCRIPTION	DATE	APPROVED
A	CHANGED MULLION PROFILE	03/02/14	R.L.
B	REVISED PER NEW TESTING	06/29/15	R.L.
C	ADDED CHARTS	09/17/15	R.L.

CHART 1
18" TRANSOM

Maximum design pressure capacity chart (psf)
Units installed into wood or metal substrate

Height (in)		Mullion Span (Unit width) (in)							
Bottom	Transom	48.0	54.0	60.0	66.0	72.0	78.0	84.0	90.0
60.0	18.0	175.0	175.0	175.0	175.0	175.0	175.0	159.9	136.5
66.0	18.0	175.0	175.0	175.0	175.0	175.0	175.0	153.9	130.7
72.0	18.0	175.0	175.0	175.0	175.0	175.0	175.0	149.7	126.4
78.0	18.0	175.0	175.0	175.0	175.0	175.0	175.0	147.3	123.4
84.0	18.0	175.0	175.0	175.0	175.0	175.0	175.0	146.4	121.5
90.0	18.0	175.0	175.0	175.0	175.0	175.0	175.0	146.4	120.9
96.0	18.0	175.0	175.0	175.0	175.0	175.0	175.0	146.4	120.9
102.0	18.0	175.0	175.0	175.0	175.0	175.0	175.0	146.4	120.9
108.0	18.0	175.0	175.0	175.0	175.0	175.0	175.0	146.4	120.9
114.0	18.0	175.0	175.0	175.0	175.0	175.0	175.0	146.4	120.9
120.0	18.0	175.0	175.0	175.0	175.0	175.0	175.0	146.4	120.9

IMPACT RATING: LARGE AND SMALL MISSILE IMPACT
MISSILE LEVEL D, WIND ZONE 4 AND HVHZ

CHART 2
24" TRANSOM

Maximum design pressure capacity chart (psf)
Units installed into wood or metal substrate

Height (in)		Mullion Span (Unit width) (in)							
Bottom	Transom	48.0	54.0	60.0	66.0	72.0	78.0	84.0	90.0
60.0	24.0	175.0	175.0	175.0	175.0	175.0	175.0	147.6	126.2
66.0	24.0	175.0	175.0	175.0	175.0	175.0	170.4	142.5	121.2
72.0	24.0	175.0	175.0	175.0	175.0	175.0	167.4	138.9	117.4
78.0	24.0	175.0	175.0	175.0	175.0	175.0	166.4	136.8	114.8
84.0	24.0	175.0	175.0	175.0	175.0	175.0	166.4	136.0	113.2
90.0	24.0	175.0	175.0	175.0	175.0	175.0	166.4	136.0	112.7
96.0	24.0	175.0	175.0	175.0	175.0	175.0	166.4	136.0	112.7
102.0	24.0	175.0	175.0	175.0	175.0	175.0	166.4	136.0	112.7
108.0	24.0	175.0	175.0	175.0	175.0	175.0	166.4	136.0	112.7
114.0	24.0	175.0	175.0	175.0	175.0	175.0	166.4	136.0	112.7
120.0	24.0	175.0	175.0	175.0	175.0	175.0	166.4	136.0	112.7

IMPACT RATING: LARGE AND SMALL MISSILE IMPACT
MISSILE LEVEL D, WIND ZONE 4 AND HVHZ

CHART 3
30" TRANSOM

Maximum design pressure capacity chart (psf)
Units installed into wood or metal substrate

Height (in)		Mullion Span (Unit width) (in)							
Bottom	Transom	48.0	54.0	60.0	66.0	72.0	78.0	84.0	90.0
60.0	30.0	175.0	175.0	175.0	175.0	175.0	163.3	137.5	117.5
66.0	30.0	175.0	175.0	175.0	175.0	175.0	158.9	133.0	113.2
72.0	30.0	175.0	175.0	175.0	175.0	175.0	156.4	129.9	109.9
78.0	30.0	175.0	175.0	175.0	175.0	175.0	155.5	128.0	107.6
84.0	30.0	175.0	175.0	175.0	175.0	175.0	155.5	127.4	106.3
90.0	30.0	175.0	175.0	175.0	175.0	175.0	155.5	127.4	105.8
96.0	30.0	175.0	175.0	175.0	175.0	175.0	155.5	127.4	105.8
102.0	30.0	175.0	175.0	175.0	175.0	175.0	155.5	127.4	105.8
108.0	30.0	175.0	175.0	175.0	175.0	175.0	155.5	127.4	105.8
114.0	30.0	175.0	175.0	175.0	175.0	175.0	155.5	127.4	105.8
120.0	30.0	175.0	175.0	175.0	175.0	175.0	155.5	127.4	105.8

IMPACT RATING: LARGE AND SMALL MISSILE IMPACT
MISSILE LEVEL D, WIND ZONE 4 AND HVHZ

CHART 4
36" TRANSOM

Maximum design pressure capacity chart (psf)
Units installed into wood or metal substrate

Height (in)		Mullion Span (Unit width) (in)							
Bottom	Transom	48.0	54.0	60.0	66.0	72.0	78.0	84.0	90.0
60.0	36.0	175.0	175.0	175.0	175.0	175.0	153.4	129.1	110.4
66.0	36.0	175.0	175.0	175.0	175.0	175.0	149.6	125.2	106.6
72.0	36.0	175.0	175.0	175.0	175.0	175.0	147.3	122.4	103.7
78.0	36.0	175.0	175.0	175.0	175.0	175.0	146.5	120.8	101.6
84.0	36.0	175.0	175.0	175.0	175.0	175.0	146.5	120.2	100.4
90.0	36.0	175.0	175.0	175.0	175.0	175.0	146.5	120.2	100.0
96.0	36.0	175.0	175.0	175.0	175.0	175.0	146.5	120.2	100.0
102.0	36.0	175.0	175.0	175.0	175.0	175.0	146.5	120.2	100.0
108.0	36.0	175.0	175.0	175.0	175.0	175.0	146.5	120.2	100.0
114.0	36.0	175.0	175.0	175.0	175.0	175.0	146.5	120.2	100.0
120.0	36.0	175.0	175.0	175.0	175.0	175.0	146.5	120.2	100.0

IMPACT RATING: LARGE AND SMALL MISSILE IMPACT
MISSILE LEVEL D, WIND ZONE 4 AND HVHZ

DESIGN PRESSURE TABLE INSTRUCTIONS:

1. DEFINE REQUIRED DESIGN LOAD PER FLORIDA BUILDING CODE CHAPTER 16.
2. DETERMINE MULLION SPAN BASED ON PRODUCT TO BE INSTALLED.
3. TO DETERMINE MULLION RATING LOCATE MULLION SPAN COLUMN AND BOTTOM UNIT HEIGHT ROW. RATING FOR MULLION IS LOCATED AT INTERSECTION OF COLUMN (MULLION SPAN) AND ROW (BOTTOM UNIT HEIGHT).
4. MULLION RATING MUST BE EQUAL OR GREATER THAN REQUIRED DESIGN PRESSURE OBTAINED IN STEP 1.
5. IF TRANSOM TO BE INSTALLED IS NOT LISTED IN THESE CHARTS GO TO NEXT HIGHER TRANSOM CHART. FOR EXAMPLE IF TRANSOM TO BE INSTALLED IS 20" HIGH THEN USE CHART FOR 24" TRANSOM.
6. WINDOW/DOOR AND TRANSOMS TO BE ANCHORED ON ALL FOUR SIDES.

SIGNED: 09/17/2015

Approved as complying with the Florida Building Code
Date Oct. 8, 2015
NOA# 13-0821.09
Miami Dade Product Control
By Manuel Perez

WinDoor INCORPORATED
7500 AMSTERDAM DRIVE
ORLANDO, FL 32832
Phone: 407.481.8400
Fax: 407.481.0505
www.windoorinc.com

9000 SERIES SHALLOW HORIZONTAL MULLION
LMI & SMI
SINGLE UNIT WITH TRANSOM

DRAWN:	DWG NO.	REV
J.L.	08-02201	C
SCALE NTS	DATE 08/15/13	SHEET 3 OF 11

LUIS R. LOMAS
LICENSE
No. 62514
STATE OF FLORIDA
PROFESSIONAL ENGINEER

DESIGN PRESSURES SHOWN IN CHARTS ARE FOR POSITIVE AND NEGATIVE DESIGN PRESSURES.

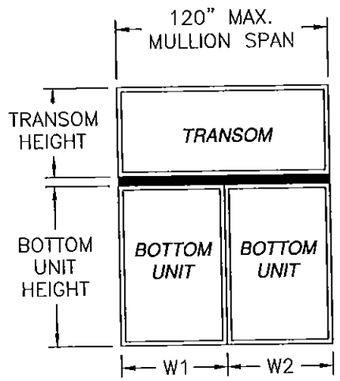

CHART 5
18" TRANSOM

Maximum design pressure capacity chart (psf)
Units installed into masonry/concrete substrate

Height (in)		Mullion Span (in)						
		48.00	60.00	72.00	84.00	96.00	108.00	120.00
		Tributary width (in)						
Window	Transom	24.00	30.00	36.00	42.00	48.00	54.00	60.00
60.00	18.00	175.0	167.3	134.4	111.5	94.7	76.5	55.1
66.00	18.00	175.0	158.3	127.4	105.9	90.0	71.8	51.7
72.00	18.00	175.0	150.2	121.2	100.8	85.8	67.7	48.8
78.00	18.00	175.0	142.9	115.5	96.2	82.0	64.0	46.2
84.00	18.00	175.0	136.3	110.3	92.0	78.5	60.7	43.8
90.00	18.00	168.2	130.3	105.5	88.1	75.3	57.7	41.7
96.00	18.00	160.9	124.7	101.2	84.6	72.3	55.0	39.8
102.00	18.00	154.1	119.7	97.2	81.3	69.0	52.6	38.0
108.00	18.00	147.9	115.0	93.5	78.3	65.7	50.3	36.4
114.00	18.00	142.2	110.7	90.0	75.5	62.7	48.3	34.9
120.00	18.00	136.9	106.7	86.8	72.9	60.0	46.4	33.5

IMPACT RATING: LARGE AND SMALL MISSILE IMPACT
MISSILE LEVEL D, WIND ZONE 4 AND HVHZ

CHART 6
24" TRANSOM

Maximum design pressure capacity chart (psf)
Units installed into masonry/concrete substrate

Height (in)		Mullion Span (in)						
		48.00	60.00	72.00	84.00	96.00	108.00	120.00
		Tributary width (in)						
Window	Transom	24.00	30.00	36.00	42.00	48.00	54.00	60.00
60.00	24.00	175.0	155.8	124.7	103.3	87.6	71.0	51.1
66.00	24.00	175.0	147.9	118.7	98.5	83.6	66.9	48.2
72.00	24.00	175.0	140.9	113.2	94.1	80.0	63.3	45.7
78.00	24.00	175.0	134.4	108.2	90.0	76.7	60.1	43.4
84.00	24.00	167.3	128.6	103.7	86.3	73.6	57.2	41.3
90.00	24.00	160.0	123.2	99.5	82.9	70.8	54.5	39.4
96.00	24.00	153.3	118.2	95.6	79.8	68.1	52.1	37.7
102.00	24.00	147.2	113.7	92.0	76.9	65.7	49.9	36.1
108.00	24.00	141.5	109.4	88.7	74.2	62.9	47.9	34.6
114.00	24.00	136.3	105.5	85.6	71.6	60.1	46.0	33.3
120.00	24.00	131.4	101.9	82.7	69.3	57.6	44.3	32.0

IMPACT RATING: LARGE AND SMALL MISSILE IMPACT
MISSILE LEVEL D, WIND ZONE 4 AND HVHZ

CHART 7
30" TRANSOM

Maximum design pressure capacity chart (psf)
Units installed into masonry/concrete substrate

Height (in)		Mullion Span (in)						
		48.00	60.00	72.00	84.00	96.00	108.00	120.00
		Tributary width (in)						
Window	Transom	24.00	30.00	36.00	42.00	48.00	54.00	60.00
60.00	30.00	175.0	147.2	117.3	96.8	82.0	66.4	47.8
66.00	30.00	175.0	140.2	111.9	92.6	78.5	62.8	45.3
72.00	30.00	175.0	133.8	107.1	88.7	75.3	59.6	43.0
78.00	30.00	168.2	128.0	102.6	85.1	72.3	56.8	40.9
84.00	30.00	160.9	122.7	98.5	81.8	69.6	54.1	39.1
90.00	30.00	154.1	117.8	94.7	78.7	67.1	51.8	37.4
96.00	30.00	147.9	113.2	91.1	75.9	64.7	49.6	35.8
102.00	30.00	142.2	109.0	87.9	73.2	62.5	47.6	34.4
108.00	30.00	136.9	105.1	84.8	70.8	60.3	45.7	33.1
114.00	30.00	132.0	101.5	82.0	68.5	57.8	44.0	31.8
120.00	30.00	127.4	98.1	79.4	66.3	55.5	42.4	30.7

IMPACT RATING: LARGE AND SMALL MISSILE IMPACT
MISSILE LEVEL D, WIND ZONE 4 AND HVHZ

CHART 8
36" TRANSOM

Maximum design pressure capacity chart (psf)
Units installed into masonry/concrete substrate

Height (in)		Mullion Span (in)						
		48.00	60.00	72.00	84.00	96.00	108.00	120.00
		Tributary width (in)						
Window	Transom	24.00	30.00	36.00	42.00	48.00	54.00	60.00
60.00	36.00	175.0	140.9	111.5	91.7	77.5	62.4	44.9
66.00	36.00	175.0	134.4	106.7	87.9	74.3	59.3	42.7
72.00	36.00	171.2	128.6	102.2	84.4	71.5	56.5	40.7
78.00	36.00	163.6	123.2	98.1	81.1	68.8	53.9	38.8
84.00	36.00	156.6	118.2	94.4	78.1	66.3	51.5	37.1
90.00	36.00	150.2	113.7	90.9	75.3	64.0	49.4	35.6
96.00	36.00	144.3	109.4	87.6	72.7	61.8	47.4	34.2
102.00	36.00	138.9	105.5	84.6	70.3	59.8	45.5	32.9
108.00	36.00	133.8	101.9	81.8	68.0	58.0	43.8	31.7
114.00	36.00	129.1	98.5	79.1	65.9	55.7	42.3	30.5
120.00	36.00	124.7	95.3	76.7	63.9	53.6	40.8	29.5

IMPACT RATING: LARGE AND SMALL MISSILE IMPACT
MISSILE LEVEL D, WIND ZONE 4 AND HVHZ

REVISIONS			
REV	DESCRIPTION	DATE	APPROVED
A	CHANGED MULLION PROFILE	03/02/14	R.L.
B	REVISED PER NEW TESTING	06/29/15	R.L.
C	ADDED CHARTS	09/17/15	R.L.

DESIGN PRESSURE TABLE INSTRUCTIONS:

1. DEFINE REQUIRED DESIGN LOAD PER FLORIDA BUILDING CODE CHAPTER 16.
2. DETERMINE MULLION SPAN AND TRIBUTARY WIDTH OF PRODUCT TO BE INSTALLED BASED ON FORMULA FOR TRIBUTARY WIDTH BELOW.
3. TO DETERMINE MULLION RATING LOCATE COLUMN FOR MULLION SPAN AND TRIBUTARY WIDTH THEN LOCATE CORRESPONDING ROW FOR BOTTOM AND TRANSOM HEIGHTS. FIND THE INTERSECTION OF THIS COLUMN AND ROW. MULLION RATING IS LOCATED AT THIS INTERSECTION.
4. MULLION RATING MUST BE EQUAL OR GREATER THAN REQUIRED DESIGN PRESSURE OBTAINED IN STEP 1.
5. IF TRANSOM TO BE INSTALLED IS NOT LISTED IN THESE CHARTS GO TO NEXT HIGHER TRANSOM CHART. FOR EXAMPLE IF TRANSOM TO BE INSTALLED IS 20" HIGH THEN USE CHART FOR 24" TRANSOM.
6. WINDOW/DOOR AND TRANSOMS TO BE ANCHORED ON ALL FOUR SIDES.

$$\text{TRIBUTARY WIDTH} = \frac{W1 + W2}{2}$$

SIGNED: 09/17/2015

Approved as complying with the Florida Building Code
Date Oct. 8, 2015
NOA# 15-0827.09
Miami Dade Product Control
By Manuel Perez

WinDoor INCORPORATED
7500 AMSTERDAM DRIVE
ORLANDO, FL 32832
Phone: 407.481.8400
Fax: 407.481.0505
www.windoorinc.com

9000 SERIES SHALLOW HORIZONTAL MULLION
LMI & SMI
TWIN UNIT WITH TRANSOM

LUIS R. LOMAS LICENSE No. 62514 STATE OF FLORIDA PROFESSIONAL ENGINEER

DRAWN:	DWG NO.	REV
J.L.	08-02201	C
SCALE NTS	DATE 08/15/13	SHEET 4 OF 11

DESIGN PRESSURES SHOWN IN CHARTS ARE FOR POSITIVE AND NEGATIVE DESIGN PRESSURES.

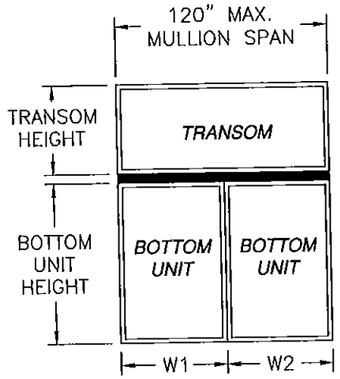

CHART 5
18" TRANSOM

Maximum design pressure capacity chart (psf)
Units installed into wood or metal substrate

Height (in)		Mullion Span (in)						
		48.00	60.00	72.00	84.00	96.00	108.00	120.00
		Tributary width (in)						
Window	Transom	24.00	30.00	36.00	42.00	48.00	54.00	60.00
60.00	18.00	175.0	175.0	175.0	138.9	106.2	76.5	55.1
66.00	18.00	175.0	175.0	175.0	128.9	98.6	71.8	51.7
72.00	18.00	175.0	175.0	163.9	120.3	92.0	67.7	48.8
78.00	18.00	175.0	175.0	153.7	112.8	86.3	64.0	46.2
84.00	18.00	175.0	175.0	144.6	106.1	81.2	60.7	43.8
90.00	18.00	175.0	175.0	136.5	100.2	76.7	57.7	41.7
96.00	18.00	175.0	175.0	129.3	94.9	72.6	55.0	39.8
102.00	18.00	175.0	175.0	122.8	90.2	69.0	52.6	38.0
108.00	18.00	175.0	168.6	117.0	85.9	65.7	50.3	36.4
114.00	18.00	175.0	160.9	111.6	82.0	62.7	48.3	34.9
120.00	18.00	175.0	153.9	106.8	78.4	60.0	46.4	33.5

IMPACT RATING: LARGE AND SMALL MISSILE IMPACT
MISSILE LEVEL D, WIND ZONE 4 AND HVHZ

CHART 6
24" TRANSOM

Maximum design pressure capacity chart (psf)
Units installed into wood or metal substrate

Height (in)		Mullion Span (in)						
		48.00	60.00	72.00	84.00	96.00	108.00	120.00
		Tributary width (in)						
Window	Transom	24.00	30.00	36.00	42.00	48.00	54.00	60.00
60.00	24.00	175.0	175.0	175.0	129.5	99.0	71.0	51.1
66.00	24.00	175.0	175.0	164.9	120.8	92.3	66.9	48.2
72.00	24.00	175.0	175.0	154.5	113.2	86.5	63.3	45.7
78.00	24.00	175.0	175.0	145.3	106.5	81.4	60.1	43.4
84.00	24.00	175.0	175.0	137.2	100.6	76.9	57.2	41.3
90.00	24.00	175.0	175.0	129.9	95.2	72.8	54.5	39.4
96.00	24.00	175.0	175.0	123.4	90.5	69.2	52.1	37.7
102.00	24.00	175.0	169.6	117.4	86.1	65.9	49.9	36.1
108.00	24.00	175.0	161.9	112.1	82.2	62.9	47.9	34.6
114.00	24.00	175.0	154.8	107.2	78.6	60.1	46.0	33.3
120.00	24.00	175.0	148.3	102.7	75.3	57.6	44.3	32.0

IMPACT RATING: LARGE AND SMALL MISSILE IMPACT
MISSILE LEVEL D, WIND ZONE 4 AND HVHZ

CHART 7
30" TRANSOM

Maximum design pressure capacity chart (psf)
Units installed into wood or metal substrate

Height (in)		Mullion Span (in)						
		48.00	60.00	72.00	84.00	96.00	108.00	120.00
		Tributary width (in)						
Window	Transom	24.00	30.00	36.00	42.00	48.00	54.00	60.00
60.00	30.00	175.0	175.0	166.5	121.7	92.8	66.4	47.8
66.00	30.00	175.0	175.0	155.9	114.0	87.0	62.8	45.3
72.00	30.00	175.0	175.0	146.5	107.2	81.8	59.6	43.0
78.00	30.00	175.0	175.0	138.3	101.1	77.2	56.8	40.9
84.00	30.00	175.0	175.0	130.9	95.8	73.1	54.1	39.1
90.00	30.00	175.0	175.0	124.2	90.9	69.4	51.8	37.4
96.00	30.00	175.0	171.3	118.2	86.6	66.1	49.6	35.8
102.00	30.00	175.0	163.4	112.8	82.6	63.1	47.6	34.4
108.00	30.00	175.0	156.2	107.8	79.0	60.3	45.7	33.1
114.00	30.00	175.0	149.5	103.3	75.6	57.8	44.0	31.8
120.00	30.00	175.0	143.4	99.1	72.6	55.5	42.4	30.7

IMPACT RATING: LARGE AND SMALL MISSILE IMPACT
MISSILE LEVEL D, WIND ZONE 4 AND HVHZ

CHART 8
36" TRANSOM

Maximum design pressure capacity chart (psf)
Units installed into wood or metal substrate

Height (in)		Mullion Span (in)						
		48.00	60.00	72.00	84.00	96.00	108.00	120.00
		Tributary width (in)						
Window	Transom	24.00	30.00	36.00	42.00	48.00	54.00	60.00
60.00	36.00	175.0	175.0	158.0	115.1	87.6	62.4	44.9
66.00	36.00	175.0	175.0	148.4	108.2	82.4	59.3	42.7
72.00	36.00	175.0	175.0	139.9	102.0	77.7	56.5	40.7
78.00	36.00	175.0	175.0	132.4	96.6	73.6	53.9	38.8
84.00	36.00	175.0	175.0	125.6	91.6	69.9	51.5	37.1
90.00	36.00	175.0	173.9	119.5	87.2	66.5	49.4	35.6
96.00	36.00	175.0	165.7	113.9	83.2	63.4	47.4	34.2
102.00	36.00	175.0	158.3	108.8	79.5	60.6	45.5	32.9
108.00	36.00	175.0	151.5	104.2	76.1	58.1	43.8	31.7
114.00	36.00	175.0	145.2	100.0	73.0	55.7	42.3	30.5
120.00	36.00	175.0	139.5	96.0	70.2	53.6	40.8	29.5

IMPACT RATING: LARGE AND SMALL MISSILE IMPACT
MISSILE LEVEL D, WIND ZONE 4 AND HVHZ

REVISIONS

REV	DESCRIPTION	DATE	APPROVED
A	CHANGED MULLION PROFILE	03/02/14	R.L.
B	REVISED PER NEW TESTING	06/29/15	R.L.
C	ADDED CHARTS	09/17/15	R.L.

DESIGN PRESSURE TABLE INSTRUCTIONS:

1. DEFINE REQUIRED DESIGN LOAD PER FLORIDA BUILDING CODE CHAPTER 16.
2. DETERMINE MULLION SPAN AND TRIBUTARY WIDTH OF PRODUCT TO BE INSTALLED BASED ON FORMULA FOR TRIBUTARY WIDTH BELOW.
3. TO DETERMINE MULLION RATING LOCATE COLUMN FOR MULLION SPAN AND TRIBUTARY WIDTH THEN LOCATE CORRESPONDING ROW FOR BOTTOM AND TRANSOM HEIGHTS. FIND THE INTERSECTION OF THIS COLUMN AND ROW. MULLION RATING IS LOCATED AT THIS INTERSECTION.
4. MULLION RATING MUST BE EQUAL OR GREATER THAN REQUIRED DESIGN PRESSURE OBTAINED IN STEP 1.
5. IF TRANSOM TO BE INSTALLED IS NOT LISTED IN THESE CHARTS GO TO NEXT HIGHER TRANSOM CHART. FOR EXAMPLE IF TRANSOM TO BE INSTALLED IS 20" HIGH THEN USE CHART FOR 24" TRANSOM.
6. WINDOW/DOOR AND TRANSOMS TO BE ANCHORED ON ALL FOUR SIDES.

$$\text{TRIBUTARY WIDTH} = \frac{W1 + W2}{2}$$

SIGNED: 09/17/2015

Approved as complying with the Florida Buiding Code
Date 09.8.2015
NOA# 13-0827.09
Miami Dade Product Control
By Manuel Perez

WinDoor INCORPORATED
7500 AMSTERDAM DRIVE
ORLANDO, FL 32832
Phone: 407.481.8400
Fax: 407.481.0505
www.windoorinc.com

9000 SERIES SHALLOW HORIZONTAL MULLION
LMI & SMI
TWIN UNIT WITH TRANSOM

LUIS R. LOMAS LICENSE No. 62514 STATE OF FLORIDA PROFESSIONAL ENGINEER

DRAWN:	DWG NO.	REV
J.L.	08-02201	C
SCALE NTS	DATE 08/15/13	SHEET 5 OF 11

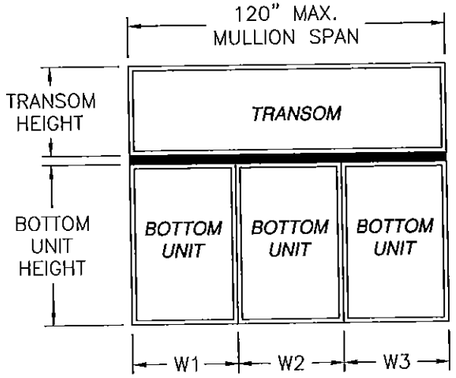

DESIGN PRESSURES SHOWN IN CHARTS ARE FOR POSITIVE AND NEGATIVE DESIGN PRESSURES.

REVISIONS			
REV	DESCRIPTION	DATE	APPROVED
A	CHANGED MULLION PROFILE	03/02/14	R.L.
B	REVISED PER NEW TESTING	06/29/15	R.L.
C	ADDED CHARTS	09/17/15	R.L.

CHART 9
18" TRANSOM

Maximum design pressure capacity chart (psf)
Units installed into masonry/concrete substrate

Height (in)		Mullion Span (in)				
		72.00	84.00	96.00	108.00	120.00
Bottom unit	Transom	Tributary width (in)				
		24.00	28.00	32.00	36.00	40.00
60.00	18.00	123.2	103.9	89.5	75.6	54.8
66.00	18.00	115.5	97.4	84.1	70.4	51.1
72.00	18.00	108.6	91.8	79.3	65.9	47.9
78.00	18.00	102.6	86.7	75.0	62.0	45.0
84.00	18.00	97.2	82.2	71.1	58.5	42.5
90.00	18.00	92.3	78.1	67.6	55.4	40.2
96.00	18.00	87.9	74.4	64.5	52.6	38.2
102.00	18.00	83.9	71.1	61.6	50.0	36.4
108.00	18.00	80.2	68.0	58.9	47.7	34.7
114.00	18.00	76.9	65.2	56.5	45.6	33.2
120.00	18.00	73.8	62.6	54.3	43.7	31.8

IMPACT RATING: LARGE AND SMALL MISSILE IMPACT
MISSILE LEVEL D, WIND ZONE 4 AND HVHZ

CHART 10
24" TRANSOM

Maximum design pressure capacity chart (psf)
Units installed into masonry/concrete substrate

Height (in)		Mullion Span (in)				
		72.00	84.00	96.00	108.00	120.00
Bottom unit	Transom	Tributary width (in)				
		24.00	28.00	32.00	36.00	40.00
60.00	24.00	115.0	96.7	83.2	70.2	50.9
66.00	24.00	108.2	91.1	78.5	65.7	47.7
72.00	24.00	102.2	86.1	74.3	61.8	44.9
78.00	24.00	96.8	81.7	70.5	58.3	42.4
84.00	24.00	92.0	77.7	67.0	55.2	40.1
90.00	24.00	87.6	74.0	63.9	52.4	38.1
96.00	24.00	83.6	70.7	61.1	49.9	36.3
102.00	24.00	80.0	67.7	58.5	47.6	34.6
108.00	24.00	76.7	64.9	56.1	45.5	33.1
114.00	24.00	73.6	62.3	53.9	43.6	31.7
120.00	24.00	70.8	59.9	51.9	41.9	30.4

IMPACT RATING: LARGE AND SMALL MISSILE IMPACT
MISSILE LEVEL D, WIND ZONE 4 AND HVHZ

CHART 11
30" TRANSOM

Maximum design pressure capacity chart (psf)
Units installed into masonry/concrete substrate

Height (in)		Mullion Span (in)				
		72.00	84.00	96.00	108.00	120.00
Bottom unit	Transom	Tributary width (in)				
		24.00	28.00	32.00	36.00	40.00
60.00	30.00	108.6	91.0	78.1	65.7	47.6
66.00	30.00	102.6	86.1	73.9	61.7	44.8
72.00	30.00	97.2	81.6	70.2	58.3	42.3
78.00	30.00	92.3	77.6	66.8	55.2	40.0
84.00	30.00	87.9	73.9	63.7	52.4	38.0
90.00	30.00	83.9	70.6	60.9	49.9	36.2
96.00	30.00	80.2	67.6	58.3	47.6	34.6
102.00	30.00	76.9	64.8	56.0	45.5	33.0
108.00	30.00	73.8	62.3	53.8	43.6	31.7
114.00	30.00	70.9	59.9	51.8	41.8	30.4
120.00	30.00	68.3	57.7	49.9	40.2	29.2

IMPACT RATING: LARGE AND SMALL MISSILE IMPACT
MISSILE LEVEL D, WIND ZONE 4 AND HVHZ

CHART 12
36" TRANSOM

Maximum design pressure capacity chart (psf)
Units installed into masonry/concrete substrate

Height (in)		Mullion Span (in)				
		72.00	84.00	96.00	108.00	120.00
Bottom unit	Transom	Tributary width (in)				
		24.00	28.00	32.00	36.00	40.00
60.00	36.00	103.7	86.5	74.0	61.8	44.8
66.00	36.00	98.1	82.0	70.2	58.3	42.3
72.00	36.00	93.2	77.9	66.8	55.2	40.0
78.00	36.00	88.7	74.3	63.8	52.4	38.0
84.00	36.00	84.6	70.9	60.9	49.9	36.2
90.00	36.00	80.9	67.9	58.4	47.6	34.6
96.00	36.00	77.5	65.1	56.0	45.5	33.0
102.00	36.00	74.3	62.5	53.8	43.6	31.7
108.00	36.00	71.5	60.1	51.8	41.9	30.4
114.00	36.00	68.8	57.9	49.9	40.2	29.2
120.00	36.00	66.3	55.9	48.2	38.7	28.1

IMPACT RATING: LARGE AND SMALL MISSILE IMPACT
MISSILE LEVEL D, WIND ZONE 4 AND HVHZ

DESIGN PRESSURE TABLE INSTRUCTIONS:

1. DEFINE REQUIRED DESIGN LOAD PER FLORIDA BUILDING CODE CHAPTER 16.
2. DETERMINE MULLION SPAN AND TRIBUTARY WIDTH OF PRODUCT TO BE INSTALLED BASED ON FORMULA FOR TRIBUTARY WIDTH BELOW.
3. TO DETERMINE MULLION RATING LOCATE COLUMN FOR MULLION SPAN AND TRIBUTARY WIDTH THEN LOCATE CORRESPONDING ROW FOR BOTTOM AND TRANSOM HEIGHTS. FIND THE INTERSECTION OF THIS COLUMN AND ROW. MULLION RATING IS LOCATED AT THIS INTERSECTION.
4. MULLION RATING MUST BE EQUAL OR GREATER THAN REQUIRED DESIGN PRESSURE OBTAINED IN STEP 1.
5. IF TRANSOM TO BE INSTALLED IS NOT LISTED IN THESE CHARTS GO TO NEXT HIGHER TRANSOM CHART. FOR EXAMPLE IF TRANSOM TO BE INSTALLED IS 20" HIGH THEN USE CHART FOR 24" TRANSOM.
6. WINDOW/DOOR AND TRANSOMS TO BE ANCHORED ON ALL FOUR SIDES.

$$\text{TRIBUTARY WIDTH} = \frac{W1 + W2 + W3}{3}$$

SIGNED: 09/17/2015

Approved as complying with the Florida Building Code
Date Oct. 8, 2015
NOA# 13-0821.09
Miami Dade Product Control
By Manuel Perez

WinDoor INCORPORATED
7500 AMSTERDAM DRIVE
ORLANDO, FL 32832
Phone: 407.481.8400
Fax: 407.481.0505
www.windoorinc.com

9000 SERIES SHALLOW HORIZONTAL MULLION
LMI & SMI
TRIPLE UNIT WITH TRANSOM

DRAWN:	DWG NO.	REV
J.L.	08-02201	C
SCALE NTS	DATE 08/15/13	SHEET 6 OF 11

LUIS R. LOMAS LICENSE No. 6251 STATE OF FLORIDA PROFESSIONAL ENGINEER

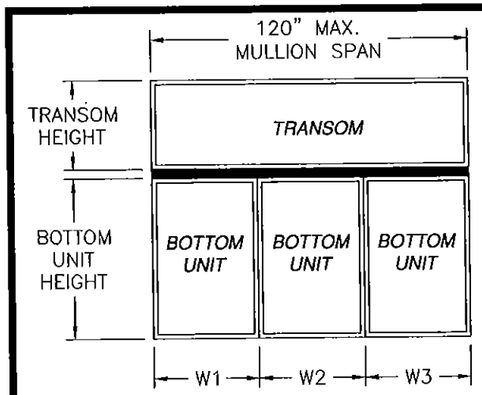

DESIGN PRESSURES SHOWN IN CHARTS ARE FOR POSITIVE AND NEGATIVE DESIGN PRESSURES.

REVISIONS			
REV	DESCRIPTION	DATE	APPROVED
A	CHANGED MULLION PROFILE	03/02/14	R.L.
B	REVISED PER NEW TESTING	06/29/15	R.L.
C	ADDED CHARTS	09/17/15	R.L.

CHART 9
18" TRANSOM

Maximum design pressure capacity chart (psf)
Units installed into wood or metal substrate

Height (in)		Mullion Span (in)				
		72.00	84.00	96.00	108.00	120.00
Bottom unit	Transom	Tributary width (in)				
		24.00	28.00	32.00	36.00	40.00
60.00	18.00	175.0	145.5	108.1	75.6	54.8
66.00	18.00	175.0	135.8	100.7	70.4	51.1
72.00	18.00	174.3	127.2	94.3	65.9	47.9
78.00	18.00	163.9	119.7	88.6	62.0	45.0
84.00	18.00	154.7	113.0	83.6	58.5	42.5
90.00	18.00	146.5	107.1	79.1	55.4	40.2
96.00	18.00	139.1	101.7	75.1	52.6	38.2
102.00	18.00	132.4	96.8	71.4	50.0	36.4
108.00	18.00	126.3	92.4	68.1	47.7	34.7
114.00	18.00	120.8	88.4	65.1	45.6	33.2
120.00	18.00	115.7	84.7	62.4	43.7	31.8

IMPACT RATING: LARGE AND SMALL MISSILE IMPACT
MISSILE LEVEL D, WIND ZONE 4 AND HVHZ

CHART 10
24" TRANSOM

Maximum design pressure capacity chart (psf)
Units installed into wood or metal substrate

Height (in)		Mullion Span (in)				
		72.00	84.00	96.00	108.00	120.00
Bottom unit	Transom	Tributary width (in)				
		24.00	28.00	32.00	36.00	40.00
60.00	24.00	175.0	135.3	100.4	70.2	50.9
66.00	24.00	174.0	126.8	94.0	65.7	47.7
72.00	24.00	163.7	119.3	88.4	61.8	44.9
78.00	24.00	154.5	112.7	83.4	58.3	42.4
84.00	24.00	146.3	106.8	78.9	55.2	40.1
90.00	24.00	138.9	101.4	74.9	52.4	38.1
96.00	24.00	132.2	96.6	71.3	49.9	36.3
102.00	24.00	126.2	92.2	68.0	47.6	34.6
108.00	24.00	120.7	88.2	65.0	45.5	33.1
114.00	24.00	115.6	84.5	62.3	43.6	31.7
120.00	24.00	110.9	81.1	59.8	41.9	30.4

IMPACT RATING: LARGE AND SMALL MISSILE IMPACT
MISSILE LEVEL D, WIND ZONE 4 AND HVHZ

CHART 11
30" TRANSOM

Maximum design pressure capacity chart (psf)
Units installed into wood or metal substrate

Height (in)		Mullion Span (in)				
		72.00	84.00	96.00	108.00	120.00
Bottom unit	Transom	Tributary width (in)				
		24.00	28.00	32.00	36.00	40.00
60.00	30.00	174.4	126.7	94.0	65.7	47.6
66.00	30.00	164.0	119.3	88.4	61.7	44.8
72.00	30.00	154.8	112.6	83.4	58.3	42.3
78.00	30.00	146.5	106.7	79.0	55.2	40.0
84.00	30.00	139.1	101.4	74.9	52.4	38.0
90.00	30.00	132.5	96.5	71.3	49.9	36.2
96.00	30.00	126.4	92.1	68.0	47.6	34.6
102.00	30.00	120.8	88.1	65.0	45.5	33.0
108.00	30.00	115.8	84.4	62.3	43.6	31.7
114.00	30.00	111.1	81.1	59.8	41.8	30.4
120.00	30.00	106.8	77.9	57.4	40.2	29.2

IMPACT RATING: LARGE AND SMALL MISSILE IMPACT
MISSILE LEVEL D, WIND ZONE 4 AND HVHZ

CHART 12
36" TRANSOM

Maximum design pressure capacity chart (psf)
Units installed into wood or metal substrate

Height (in)		Mullion Span (in)				
		72.00	84.00	96.00	108.00	120.00
Bottom unit	Transom	Tributary width (in)				
		24.00	28.00	32.00	36.00	40.00
60.00	36.00	165.1	119.6	88.7	61.8	44.8
66.00	36.00	155.8	113.0	83.7	58.3	42.3
72.00	36.00	147.4	107.0	79.2	55.2	40.0
78.00	36.00	139.9	101.6	75.1	52.4	38.0
84.00	36.00	133.2	96.8	71.5	49.9	36.2
90.00	36.00	127.0	92.3	68.2	47.6	34.6
96.00	36.00	121.4	88.3	65.2	45.5	33.0
102.00	36.00	116.3	84.6	62.4	43.6	31.7
108.00	36.00	111.6	81.2	59.9	41.9	30.4
114.00	36.00	107.3	78.1	57.6	40.2	29.2
120.00	36.00	103.2	75.2	55.4	38.7	28.1

IMPACT RATING: LARGE AND SMALL MISSILE IMPACT
MISSILE LEVEL D, WIND ZONE 4 AND HVHZ

DESIGN PRESSURE TABLE INSTRUCTIONS:

1. DEFINE REQUIRED DESIGN LOAD PER FLORIDA BUILDING CODE CHAPTER 16.
2. DETERMINE MULLION SPAN AND TRIBUTARY WIDTH OF PRODUCT TO BE INSTALLED BASED ON FORMULA FOR TRIBUTARY WIDTH BELOW.
3. TO DETERMINE MULLION RATING LOCATE COLUMN FOR MULLION SPAN AND TRIBUTARY WIDTH THEN LOCATE CORRESPONDING ROW FOR BOTTOM AND TRANSOM HEIGHTS. FIND THE INTERSECTION OF THIS COLUMN AND ROW. MULLION RATING IS LOCATED AT THIS INTERSECTION.
4. MULLION RATING MUST BE EQUAL OR GREATER THAN REQUIRED DESIGN PRESSURE OBTAINED IN STEP 1.
5. IF TRANSOM TO BE INSTALLED IS NOT LISTED IN THESE CHARTS GO TO NEXT HIGHER TRANSOM CHART. FOR EXAMPLE IF TRANSOM TO BE INSTALLED IS 20" HIGH THEN USE CHART FOR 24" TRANSOM.
6. WINDOW/DOOR AND TRANSOMS TO BE ANCHORED ON ALL FOUR SIDES.

$$\text{TRIBUTARY WIDTH} = \frac{W1 + W2 + W3}{3}$$

SIGNED: 09/17/2015

Approved as complying with the Florida Building Code
Date Oct. 8, 2015
NOA# 13-0827.09
Miami Dade Product Control
By Manuel Perez

WinDoor INCORPORATED
7500 AMSTERDAM DRIVE
ORLANDO, FL 32832
Phone: 407.481.8400
Fax: 407.481.0505
www.windoorinc.com

9000 SERIES SHALLOW HORIZONTAL MULLION
LMI & SMI
TRIPLE UNIT WITH TRANSOM

DRAWN: J.L.	DWG NO. 08-02201	REV C
SCALE NTS	DATE 08/15/13	SHEET 7 OF 11

LUIS R. LOMAS LICENSE No. 62514 STATE OF FLORIDA PROFESSIONAL ENGINEER

REVISIONS			
REV	DESCRIPTION	DATE	APPROVED
A	CHANGED MULLION PROFILE	03/02/14	R.L.
B	REVISED PER NEW TESTING	06/29/15	R.L.
C	ADDED CHARTS	09/17/15	R.L.

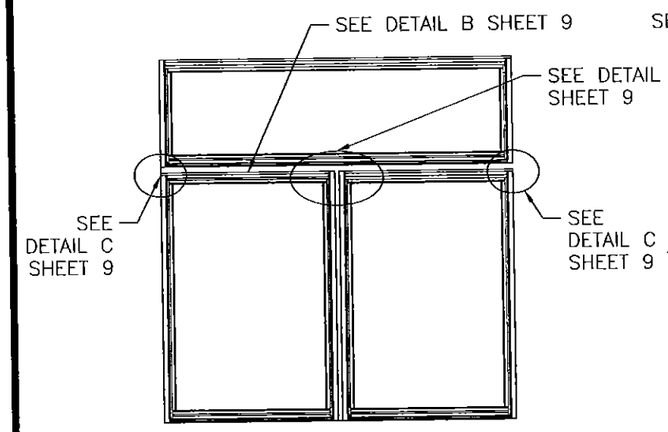

TWIN WITH TRANSOM

REFER TO SHEETS 4 & 5 FOR LIMITATIONS AND RATINGS

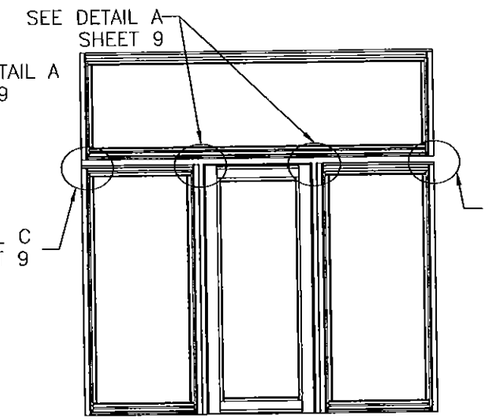

TRIPLE WITH TRANSOM

REFER TO SHEETS 6 & 7 FOR LIMITATIONS AND RATINGS

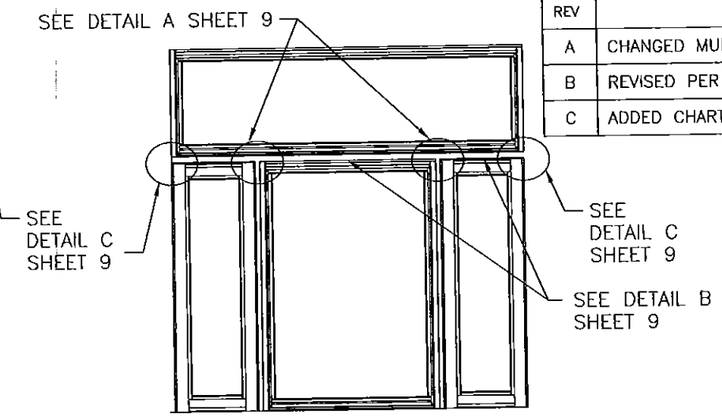

3 UNITS WITH TRANSOM

REFER TO SHEETS 6 & 7 FOR LIMITATIONS AND RATINGS

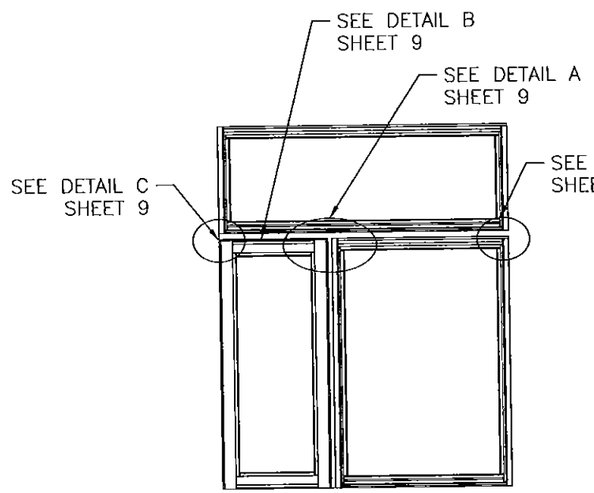

TWO UNITS WITH TRANSOM

REFER TO SHEETS 4 & 5 FOR LIMITATIONS AND RATINGS

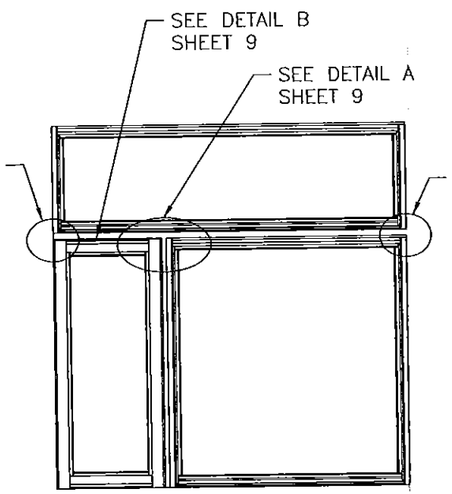

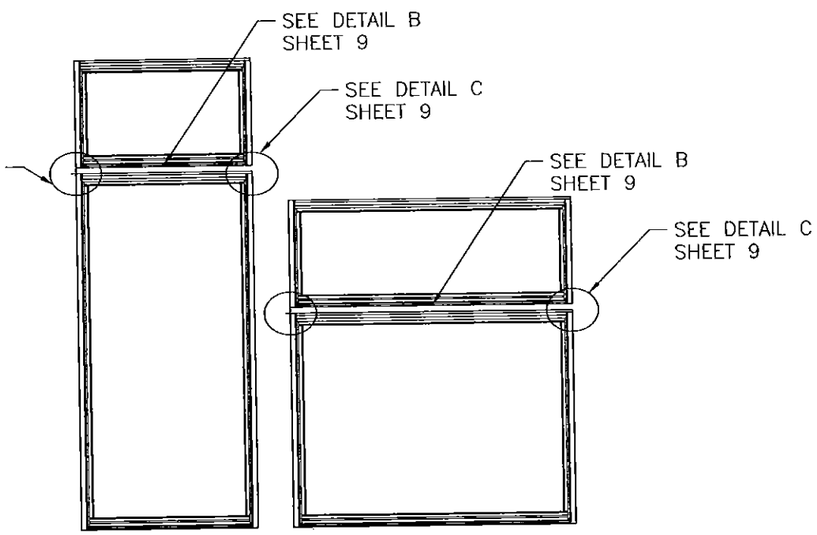

SINGLE WITH TRANSOM

REFER TO SHEETS 2 & 3 FOR LIMITATIONS AND RATINGS

SIGNED: 09/17/2015

NOTES:
1. MULLED UNITS MAY BE OPERABLE OR FIXED.

Approved as complying with the Florida Buiding Code
Date Oct 8, 2015
NOA# 13-0827.09
Miami Dade Product Control
By Manuel Perez

WinDoor INCORPORATED
7500 AMSTERDAM DRIVE
ORLANDO, FL 32832
Phone: 407.481.8400
Fax: 407.481.0505
www.windoorinc.com

9000 SERIES SHALLOW HORIZONTAL MULLION
LMI & SMI
APPROVED CONFIGURATIONS

DRAWN:	DWG NO.	REV
J.L.	08-02201	C
SCALE NTS	DATE 08/15/13	SHEET 8 OF 11

LUIS R. LOMAS LICENSE No. 6251 STATE OF FLORIDA PROFESSIONAL ENGINEER

REVISIONS			
REV	DESCRIPTION	DATE	APPROVED
A	CHANGED MULLION PROFILE	03/02/14	R.L.
B	REVISED PER NEW TESTING	06/29/15	R.L.
C	ADDED CHARTS	09/17/15	R.L.

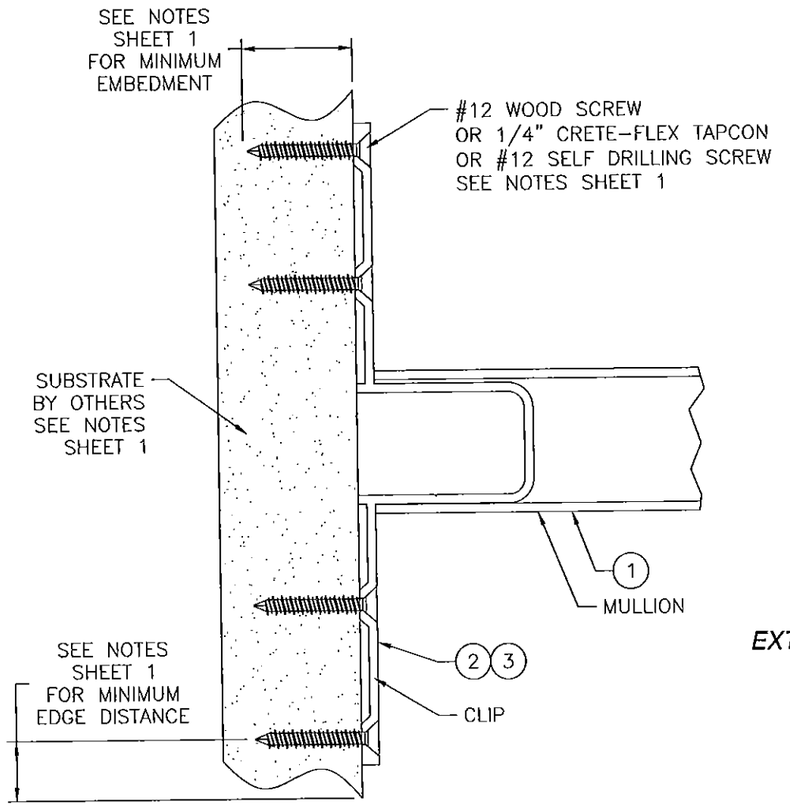

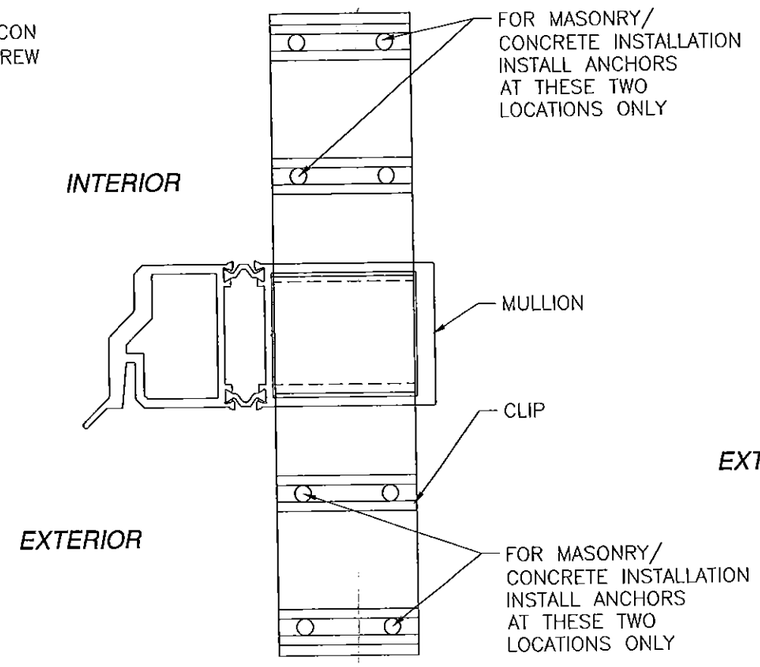

DETAIL C
HORIZONTAL MULL INSTALLATION

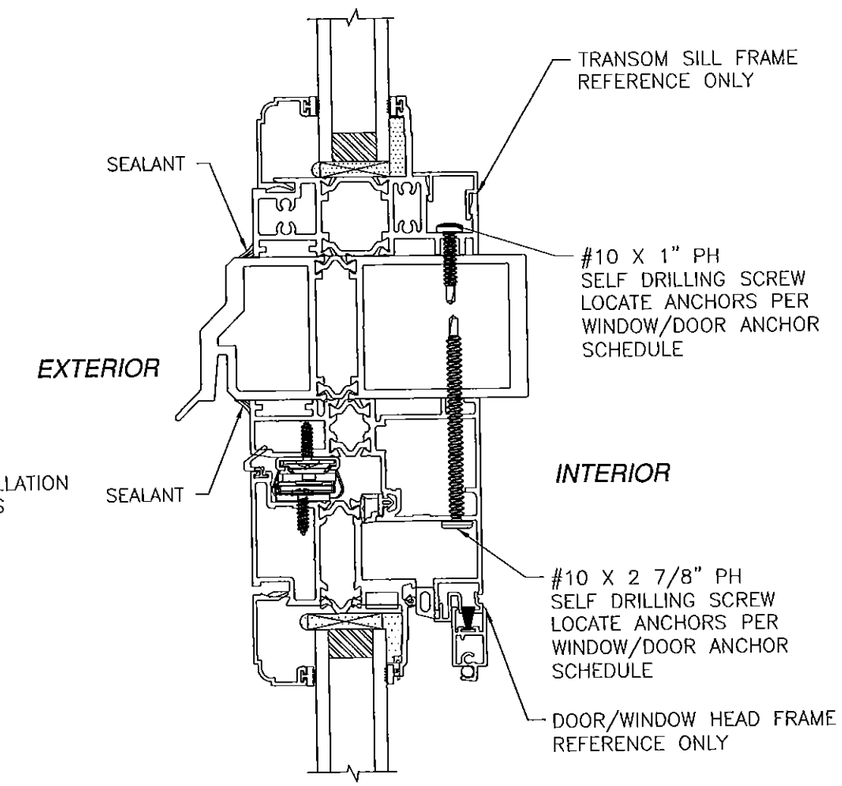

DETAIL B
HORIZONTAL MULLION CONNECTION DETAIL

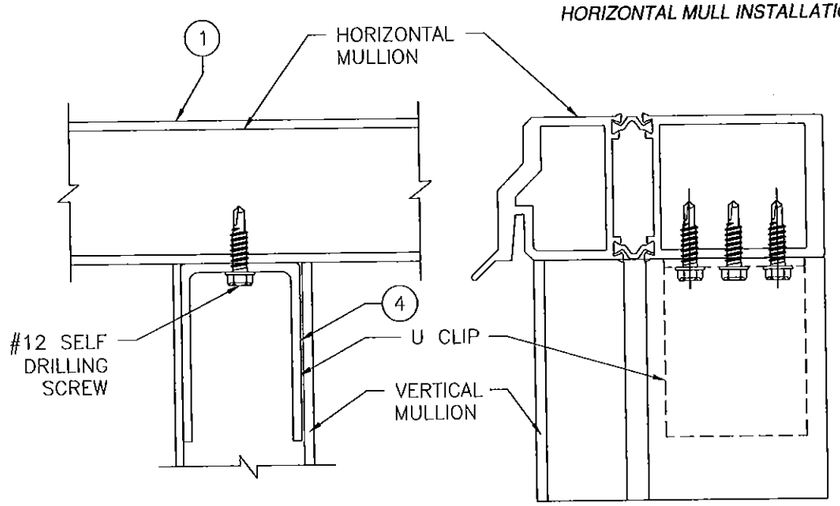

DETAIL A
VERTICAL TO HORIZONTAL MULLION WITH U CLIP CONNECTION DETAIL

SIGNED: 09/17/2015

Approved as complying with the Florida Building Code
Date Oct. 8, 2015
NOA# 13-0827.09
Miami Dade Product Control
By Manuel Perez

WinDoor INCORPORATED
7500 AMSTERDAM DRIVE
ORLANDO, FL 32832
Phone: 407.481.8400
Fax: 407.481.0505
www.windoorinc.com

9000 SERIES SHALLOW HORIZONTAL MULLION
LMI & SMI
INSTALLATION DETAILS

DRAWN:	DWG NO.	REV
J.L.	08-02201	C
SCALE NTS	DATE 08/15/13	SHEET 9 OF 11

LUIS R. LOMAS LICENSE No. 62614 STATE OF FLORIDA PROFESSIONAL ENGINEER

REVISIONS			
REV	DESCRIPTION	DATE	APPROVED
A	CHANGED MULLION PROFILE	03/02/14	R.L.
B	REVISED PER NEW TESTING	06/29/15	R.L.
C	ADDED CHARTS	09/17/15	R.L.

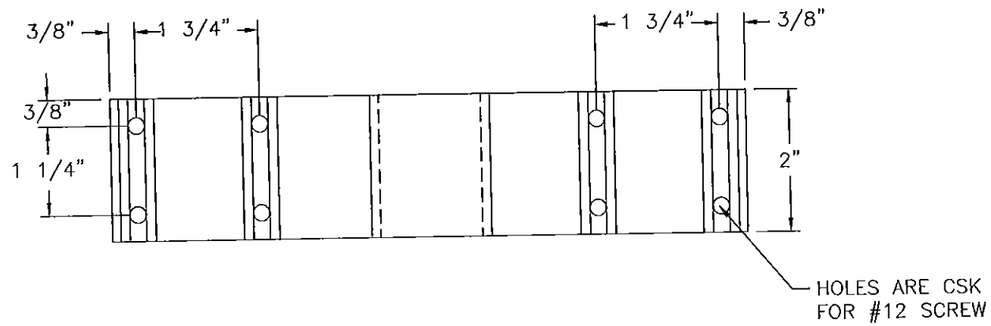

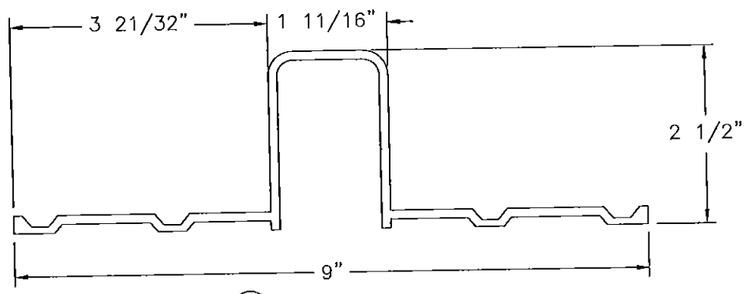

(2) HAT CLIP
ALUMINUM 6063-T6 .125" THICK

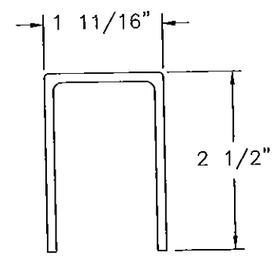

(4) U CLIP
ALUMINUM 6063-T6 .125" THICK

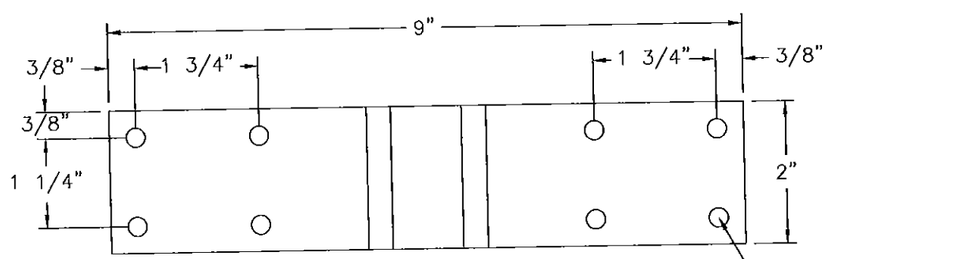

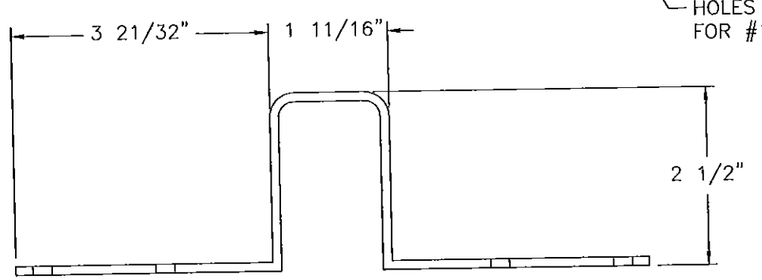

(3) FLAT HAT CLIP
ALUMINUM 6063-T6 .125" THICK

SIGNED: 09/17/2015

Approved as complying with the Florida Buiding Code
Date 08.8.2015
NOA# 13-0827.09
Miami Dade Product Control
By Manuel Perez

WinDoor INCORPORATED
7500 AMSTERDAM DRIVE
ORLANDO, FL 32832
Phone: 407.481.8400
Fax: 407.481.0505
www.windoorinc.com

9000 SERIES SHALLOW HORIZONTAL MULLION
LMI & SMI
COMPONENTS

DRAWN: J.L.	DWG NO. 08-02201	REV C
SCALE NTS	DATE 08/15/13	SHEET 10 OF 11

LUIS R. LOMAS
LICENSE
No. 62514
STATE OF FLORIDA
PROFESSIONAL ENGINEER

BILL OF MATERIALS				
ITEM NO.:	PART NUMBER	DESCRIPTION	MANUFACTURER	MATERIAL
1	902A05-WDI	MULLION ASSEMBLY	KEYMARK	ALUMINUM 6063-T6
2	FS-08482	HAT CLIP	KEYMARK	ALUMINUM 6063-T6
3	11008611	FLAT HAT CLIP	KEYMARK	ALUMINUM 6063-T6
4	FS-08481	INTERNAL CLIP	KEYMARK	ALUMINUM 6063-T6

REVISIONS			
REV	DESCRIPTION	DATE	APPROVED
A	CHANGED MULLION PROFILE	03/02/14	R.L.
B	REVISED PER NEW TESTING	06/29/15	R.L.
C	ADDED CHARTS	09/17/15	R.L.

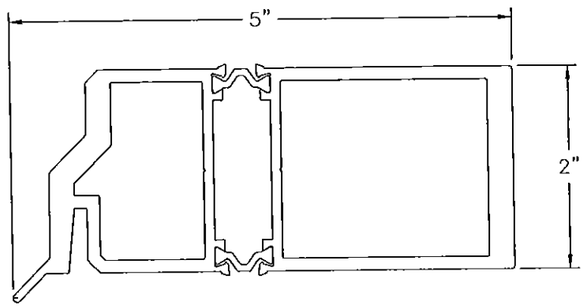

(1) *MULLION ASSEMBLY 902A05-WDI*

ALUMINUM 6063-T6 .100" THICK
MOMENT OF INERTIA: 6.375 IN^4
SECTION MODULUS: 2.449 IN^3
EFFECTIVE MOMENT OF INERTIA: 5.737 IN^4
EFFECTIVE SECTION MODULUS: 2.204 IN^3
(EFFECTIVE VALUES BASED ON PREVIOUS TESTING)

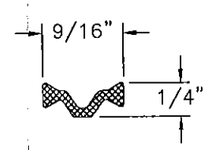

14.6MM THERMAL STRUT

NYLON POLYAMIDE .070" THICK

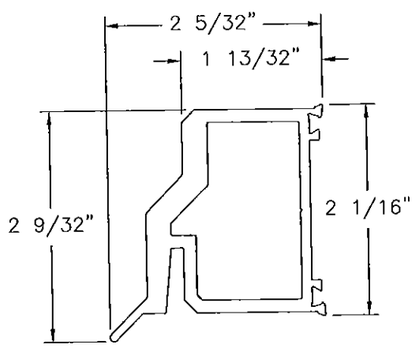

EXTERIOR MULLION (H-14226)

ALUMINUM 6063-T6 .100" THICK

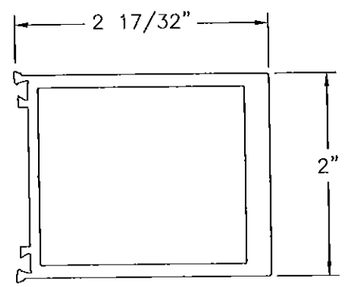

INTERIOR MULLION (H-14225)

ALUMINUM 6063-T6 .100" THICK

SIGNED: 09/17/2015

Approved as complying with the Florida Building Code
Date Oct. 8 2015
NOA# 13-0827.09
Miami Dade Product Control
By Manuel Perez

WinDoor INCORPORATED
7500 AMSTERDAM DRIVE
ORLANDO, FL 32832
Phone: 407.481.8400
Fax: 407.481.0505
www.windoorinc.com

9000 SERIES SHALLOW HORIZONTAL MULLION
LMI & SMI
COMPONENTS

DRAWN:	DWG NO.	REV
J.L.	08-02201	C
SCALE NTS	DATE 08/15/13	SHEET 11 OF 11

LUIS R. LOMAS
LICENSE
No. 62514
STATE OF FLORIDA
PROFESSIONAL ENGINEER