MIAMI-DADE COUNTY
DEPARTMENT OF REGULATORY AND ECONOMIC RESOURCES (RER)
BOARD AND CODE ADMINISTRATION DIVISION

MIAMI-DADE COUNTY
PRODUCT CONTROL SECTION
11805 SW 26 Street, Room 208
T (786) 315-2590 F (786) 315-2599
www.miamidade.gov/economy

NOTICE OF ACCEPTANCE (NOA)

Trulite Window & Door Solutions, LLC
8130 NW 74th Avenue
Medley, FL 33166

SCOPE:

This NOA is being issued under the applicable rules and regulations governing the use of construction materials. The documentation submitted has been reviewed and accepted by Miami-Dade County RER - Product Control Section to be used in Miami Dade County and other areas where allowed by the Authority Having Jurisdiction (AHJ).

This NOA shall not be valid after the expiration date stated below. The Miami-Dade County Product Control Section (In Miami Dade County) and/or the AHJ (in areas other than Miami Dade County) reserve the right to have this product or material tested for quality assurance purposes. If this product or material fails to perform in the accepted manner, the manufacturer will incur the expense of such testing and the AHJ may immediately revoke, modify, or suspend the use of such product or material within their jurisdiction. RER reserves the right to revoke this acceptance, if it is determined by Miami-Dade County Product Control Section that this product or material fails to meet the requirements of the applicable building code.

This product is approved as described herein, and has been designed to comply with the Florida Building Code, including the High Velocity Hurricane Zone.

DESCRIPTION: Series "10000 Tilt" White PVC Single Hung Window – N.I.

APPROVAL DOCUMENT: Drawing No. **W09–11**, titled "Series 10000 PVC Single Hung Tilt Wdw. (N.I.)", sheets 1 to 8 of 8, dated 02/12/09, with revision D dated 10/30/13, prepared by Al–Farooq Corporation, signed and sealed by Javad Ahmad, P.E., bearing the Miami–Dade County Product Control Revision stamp with the Notice of Acceptance number and expiration date by the Miami–Dade County Product Control Section.

MISSILE IMPACT RATING: None.

LABELING: Each unit shall bear a permanent label with the manufacturer's name or logo, city, state, model/series, and following statement: "Miami-Dade County Product Control Approved", unless otherwise noted herein.

RENEWAL of this NOA shall be considered after a renewal application has been filed and there has been no change in the applicable building code negatively affecting the performance of this product.

TERMINATION of this NOA will occur after the expiration date or if there has been a revision or change in the materials, use, and/or manufacture of the product or process. Misuse of this NOA as an endorsement of any product, for sales, advertising or any other purposes shall automatically terminate this NOA. Failure to comply with any section of this NOA shall be cause for termination and removal of NOA.

ADVERTISEMENT: The NOA number preceded by the words Miami-Dade County, Florida, and followed by the expiration date may be displayed in advertising literature. If any portion of the NOA is displayed, then it shall be done in its entirety.

INSPECTION: A copy of this entire NOA shall be provided to the user by the manufacturer or its distributors and shall be available for inspection at the job site at the request of the Building Official.

This NOA **revises and renews NOA# 12-0118.20** and consists of this page 1 and evidence pages E-1 and E-2, as well as approval document mentioned above.

The submitted documentation was reviewed by **Manuel Perez, P.E.**

MIAMI-DADE COUNTY APPROVED

10/31/13

NOA No. 13-0909.13
Expiration Date: April 22, 2019
Approval Date: November 07, 2013

Trulite Window & Door Solutions, LLC

NOTICE OF ACCEPTANCE: EVIDENCE SUBMITTED

A. DRAWINGS

1. Manufacturer's die drawings and sections.
   (Submitted under NOA No. 09–0223.08)
2. Drawing No **W09–11**, titled "Series 10000 PVC Single Hung Tilt Wdw. (N.I.)", sheets 1 to 8 of 8, dated 02/12/09, with revision D dated 10/30/13, prepared by Al–Farooq Corporation, signed and sealed by Javad Ahmad, P. E.

B. TESTS

1. Test reports on: 1) Air Infiltration Test, per FBC, TAS 202–94
   2) Uniform Static Air Pressure Test, Loading per FBC TAS 202–94
   3) Water Resistance Test, per FBC, TAS 202–94
   4) Forced Entry Test, per FBC 2411.3.2.1 (b) and TAS 202–94
   along with marked–up drawings and installation diagram of PVC single hung window, prepared by Fenestration Testing Laboratory, Test Report No. **FTL 5952** dated 09/14/09, signed and sealed by Julio E. Gonzalez, P. E.
   (Submitted under NOA No. 10–0203.04)
2. Test reports on: 1) Air Infiltration Test, per FBC, TAS 202–94
   2) Uniform Static Air Pressure Test, Loading per FBC TAS 202–94
   3) Water Resistance Test, per FBC, TAS 202–94
   4) Forced Entry Test, per FBC 2411.3.2.1 (b) and TAS 202–94
   along with marked–up drawings and installation diagram of PVC single hung window, prepared by Fenestration Testing Laboratory, Inc., Test Report No. **FTL 5666** dated 09/12/08, signed and sealed by Carlos S. Rionda, P. E.
   (Submitted under previous NOA No. 09–0223.08)

C. CALCULATIONS

1. Anchor verification calculations and structural analysis, complying with FBC–2007 and FBC-2010, dated 01/18/10 and updated on 01/04/12, prepared, signed and sealed by Javad Ahmad, P. E.
2. Glazing complies with **ASTM E1300-04**
   (Submitted under previous NOA No. 12–0118.20)

D. QUALITY ASSURANCE

1. Miami-Dade Department of Regulatory and Economic Resources (RER)

Manuel Perez, P.E.
Product Control Examiner
NOA No. 13-0909.13
Expiration Date: April 22, 2019
Approval Date: November 07, 2013

NOTICE OF ACCEPTANCE: EVIDENCE SUBMITTED

E. MATERIAL CERTIFICATIONS

1. Notice of Acceptance No. **12–1017.02** issued to Quanex Building Products, Inc. for "**White Rigid PVC Exterior Extrusions for Windows and Doors**" dated 02/07/13, expiring on 12/26/16.

F. STATEMENTS

1. Statement letter of conformance, complying with the **FBC-2010**, and of no financial interest, dated October 30, 2013, signed and sealed by Javad Ahmad, P.E.

G. OTHER

1. Notice of Acceptance No. **12-0118.20**, issued to Trulite Window & Door Solutions, LLC for their Series "10000 Tilt" White PVC Single Hung Window – S.M.I.", approved on 03/15/12 and expiring on 04/22/14.

Manuel Perez

Manuel Perez, P.E.
Product Control Examiner
NOA No. 13-0909.13
Expiration Date: April 22, 2019
Approval Date: November 07, 2013

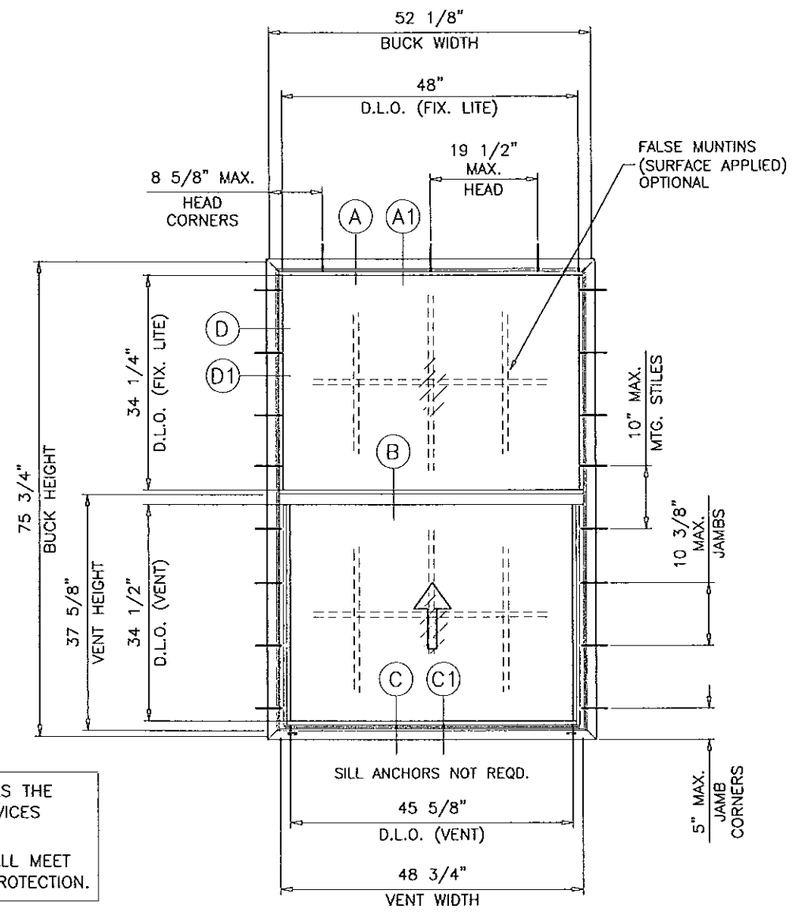

FLANGE & FLUSH FRAME

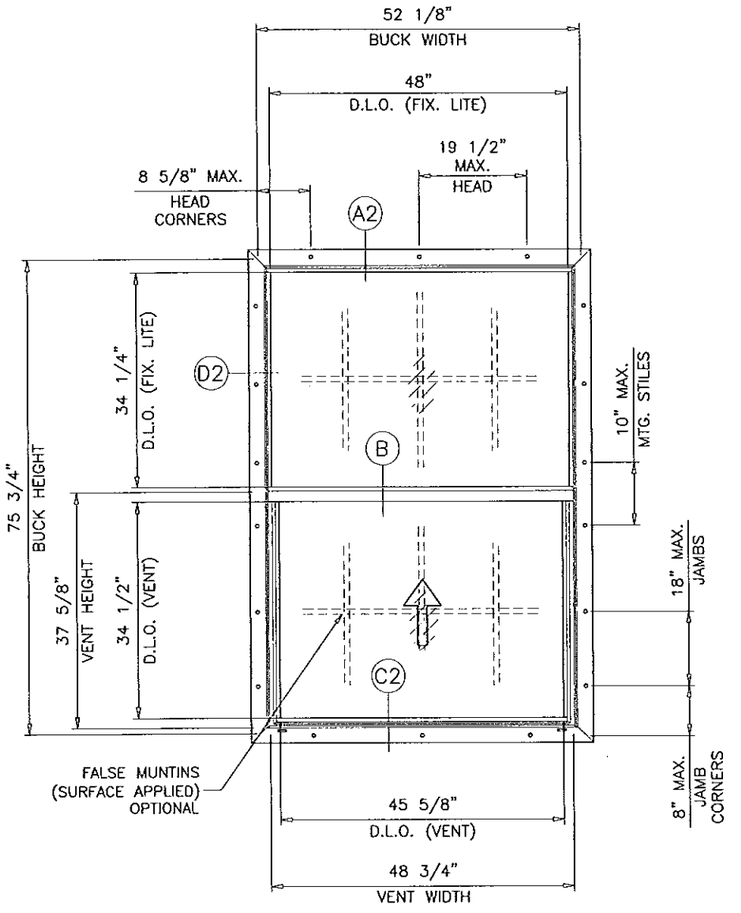

FIN FRAME

TYPICAL ELEVATION

INSTALLATION OF THIS PRODUCT IN THE HVHZ AREA REQUIRES THE USE OF APPROVED SHUTTERS OR EXTERNAL PROTECTION DEVICES COMPLYING WITH HVHZ REQUIREMENTS.

INSTALLATION OF THIS SYSTEM OUTSIDE THE HVHZ AREA SHALL MEET THE APPLICABLE REQUIREMENTS FOR WIND BORNE DEBRIS PROTECTION.

SERIES 10000 PVC SINGLE HUNG TILT WINDOW

DESIGN LOAD RATINGS FOR THESE WINDOWS TO BE AS PER CHARTS SHOWN ON SHEET 2.

APPROVAL APPLIES TO SINGLE UNITS OR SIDE BY SIDE COMBINATIONS OF S.H./S.H. OR SINGLE HUNG WITH OTHER WINDOW TYPES IN MODULES OF TWO OR MORE WINDOWS USING MIAMI-DADE COUNTY APPROVED MULLIONS IN BETWEEN. LOWER DESIGN PRESSURE FROM WINDOWS OR MULLION APPROVAL WILL APPLY TO ENTIRE SYSTEM.

THIS PRODUCT HAS BEEN DESIGNED AND TESTED TO COMPLY WITH THE REQUIREMENTS OF THE FLORIDA BUILDING CODE INCLUDING HIGH VELOCITY HURRICANE ZONE (HVHZ).

WOOD BUCKS BY OTHERS, MUST BE ANCHORED PROPERLY TO TRANSFER LOADS TO THE STRUCTURE.

ANCHORS SHALL BE AS LISTED, SPACED AS SHOWN ON DETAILS, ANCHORS EMBEDMENT TO BASE MATERIAL SHALL BE BEYOND WALL DRESSING OR STUCCO.

ANCHORING OR LOADING CONDITIONS NOT SHOWN IN THESE DETAILS ARE NOT PART OF THIS APPROVAL.

A LOAD DURATION INCREASE IS USED IN DESIGN OF ANCHORS INTO WOOD ONLY.

MATERIALS INCLUDING BUT NOT LIMITED TO STEEL/METAL SCREWS, THAT COME INTO CONTACT WITH OTHER DISSIMILAR MATERIALS SHALL MEET THE REQUIREMENTS OF THE FLORIDA BLDG. CODE SECTION 2003.8.4.

INSULATING GLASS
NON IMPACT

Engr: JAVAD AHMAD
CIVIL
FLA. PE # 70592
C.A.N. 3538

OCT 01 2013

PRODUCT REVISED
as complying with the Florida Building Code
Acceptance No 13-0909.13
Expiration Date April 22 2019
By Manuel Feria
Miami Dade Product Control

AL-FAROOQ CORPORATION
ENGINEERS & PRODUCT DEVELOPMENT
1235 S.W. 87 AVE
MIAMI, FLORIDA 33174
TEL. (305) 264-8100 FAX. (305) 262-6978

COMP-ANL\W09-11AWP

SERIES 10000 PVC SINGLE HUNG TILT WDW. (N.I.)

TRULITE WINDOW & DOOR SOLUTIONS, LLC
8130 N.W. 74TH AVE.
MEDLEY, FL. 33166
TEL. (305) 887-2646 FAX (305) 883-1309

revisions:

no	date	by	description
A	09.30.09		GENERAL REVISION
B	05.27.10		MANUF. NAME REVISED
C	12.23.11		UPDATED TO 2010 FBC, NAME REV
D	10.30.13		NO CHANGE THIS SHEET

date: 02-12-09
scale: 1/2"=1'-0"
dr. by: HAMID
chk. by:

drawing no.
W09-11

sheet 1 of 8

EQUAL LITES WINDOWS
FLANGE AND FLUSH FRAMES

DESIGN LOAD CAPACITY – PSF

BUCK DIMS.		7/8" OVERALL INSUL. GLASS	
WIDTH	HEIGHT	EXT.(+)	INT.(–)
18–1/8"		65.0	125.0
25–1/2"		65.0	125.0
31"		65.0	125.0
36"	25"	65.0	125.0
41"	(4)	65.0	125.0
47"		65.0	125.0
52–1/8"		65.0	113.2
18–1/8"		65.0	125.0
25–1/2"		65.0	125.0
31"		65.0	125.0
36"	37–3/8"	65.0	109.6
41"	(4)	65.0	96.2
47"		65.0	83.9
52–1/8"		65.0	75.7
18–1/8"		65.0	125.0
25–1/2"		65.0	125.0
31"		65.0	125.0
36"	49–5/8"	65.0	123.8
41"	(6)	65.0	108.7
47"		65.0	94.1
52–1/8"		65.0	80.9
18–1/8"		65.0	125.0
25–1/2"		65.0	125.0
31"		65.0	115.1
36"	62"	65.0	99.1
41"	(6)	65.0	87.0
47"		65.0	75.9
52–1/8"		65.0	68.4
18–1/8"		65.0	125.0
25–1/2"		65.0	125.0
31"		65.0	111.1
36"	75–3/4"	65.0	96.0
41"	(8)	65.0	85.3
47"		65.0	75.8
52–1/8"		64.5	64.5

EQUAL LITES WINDOWS
FIN FRAME

DESIGN LOAD CAPACITY – PSF

BUCK DIMS.		7/8" OVERALL INSUL. GLASS	
WIDTH	HEIGHT	EXT.(+)	INT.(–)
18–1/8"		65.0	125.0
25–1/2"		65.0	125.0
31"		65.0	125.0
36"	25"	65.0	125.0
41"	(2)	65.0	125.0
47"		65.0	125.0
52–1/8"		65.0	125.0
18–1/8"		65.0	125.0
25–1/2"		65.0	125.0
31"		65.0	125.0
36"	37–3/8"	65.0	125.0
41"	(4)	65.0	125.0
47"		65.0	116.1
52–1/8"		65.0	102.2
18–1/8"		65.0	125.0
25–1/2"		65.0	125.0
31"		65.0	125.0
36"	49–5/8"	65.0	125.0
41"	(4)	65.0	115.2
47"		65.0	95.2
52–1/8"		65.0	82.9
18–1/8"		65.0	125.0
25–1/2"		65.0	125.0
31"		65.0	125.0
36"	62"	65.0	116.6
41"	(4)	65.0	102.0
47"		65.0	83.7
52–1/8"		65.0	72.0
18–1/8"		65.0	125.0
25–1/2"		65.0	125.0
31"		65.0	111.1
36"	75–3/4"	65.0	96.0
41"	(6)	65.0	85.3
47"		65.0	75.8
52–1/8"		65.0	65.0

NO. IN PARENTHESIS INDICATE NUMBER OF ANCHORS PER JAMB.

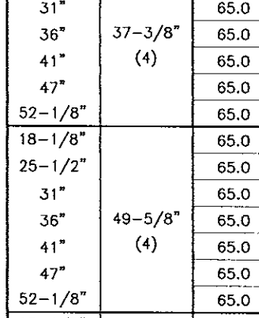

EQUAL LITES

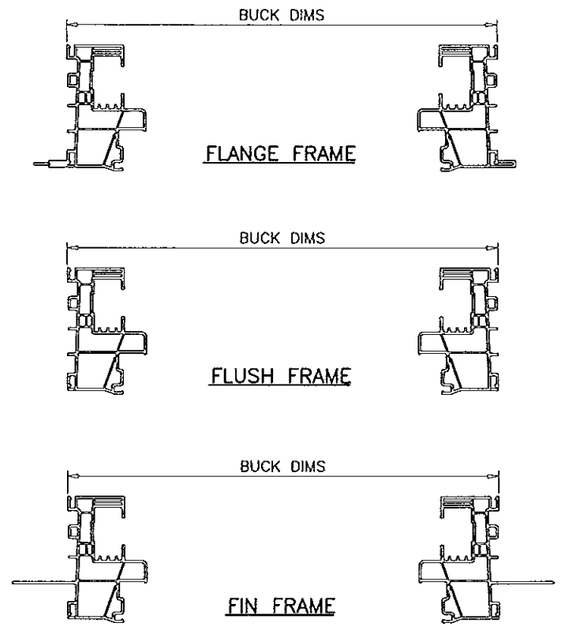

UNEQUAL LITES WINDOWS
FLANGE AND FLUSH FRAMES

DESIGN LOAD CAPACITY – PSF

BUCK DIMS.		7/8" OVERALL INSUL. GLASS	
WIDTH	HEIGHT	EXT.(+)	INT.(–)
18–1/8"		65.0	125.0
25–1/2"		65.0	125.0
31"		65.0	125.0
36"	49–5/8"	65.0	117.2
41"	(6)	65.0	102.2
47"		65.0	86.3
52–1/8"		65.0	74.9
18–1/8"		65.0	125.0
25–1/2"		65.0	112.4
31"	62"	65.0	95.4
36"	(6)	65.0	85.5
41"		65.0	76.0
18–1/8"		65.0	125.0
25–1/2"	75–1/4"	65.0	84.1
31"	(8)	65.0	66.2

UNEQUAL LITES WINDOWS
FIN FRAME

DESIGN LOAD CAPACITY – PSF

BUCK DIMS.		7/8" OVERALL INSUL. GLASS	
WIDTH	HEIGHT	EXT.(+)	INT.(–)
18–1/8"		65.0	125.0
25–1/2"		65.0	125.0
31"		65.0	125.0
36"	49–5/8"	65.0	117.2
41"	(4)	65.0	102.2
47"		65.0	86.3
52–1/8"		65.0	74.9
18–1/8"		65.0	125.0
25–1/2"		65.0	112.4
31"	62"	65.0	95.4
36"	(4)	65.0	85.5
41"		65.0	76.0
18–1/8"		65.0	125.0
25–1/2"	75–1/4"	65.0	84.1
31"	(6)	65.0	66.2

NO. IN PARENTHESIS INDICATE NUMBER OF ANCHORS PER JAMB.

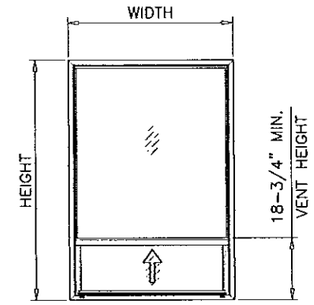

UNEQUAL LITES (ORIEL TYPE)

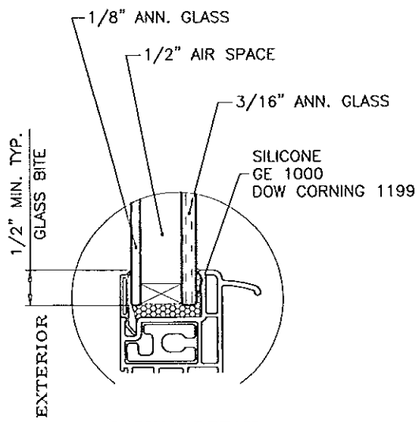

GLAZING DETAIL

NOTE:
GLASS CAPACITIES ON THIS SHEET ARE BASED ON ASTM E1300–09 (3 SEC. GUSTS) AND FLORIDA BUILDING COMMISSION DECLARATORY STATEMENT DCA05–DEC–219

Engr: JAVAD AHMAD
CIVIL
FLA. PE # 70592
C.A.N. 3538

OCT 31 2013

PRODUCT REVISED
as complying with the Florida Building Code
Acceptance No 12-0904.13
Expiration Date April 22, 2019
By Manuel Perez
Miami-Dade Product Control

afc
AL-FAROOQ CORPORATION
ENGINEERS & PRODUCT DEVELOPMENT
1235 S.W. 87 AVE
MIAMI, FLORIDA 33174
TEL. (305) 264-8100 FAX. (305) 262-6978

COMP–ANL\W09–11AWP

SERIES 10000 PVC SINGLE HUNG TILT WDW. (N.I.)

TRULITE WINDOW & DOOR SOLUTIONS, LLC
8130 N.W. 74TH AVE.
MEDLEY, FL. 33166
TEL. (305) 887–2646 FAX (305) 883–1309

revisions:

no	date	by	description
A	09.30.09		GENERAL REVISION
B	05.27.10		MANUF. NAME REVISED
C	12.23.11		MANUF. NAME REVISED
D	10.30.13		NO CHANGE THIS SHEET

date: 02–12–09
scale: 1/2"=1'–0"
dr. by: HAMID
chk. by:

drawing no.
W09–11

sheet 2 of 8

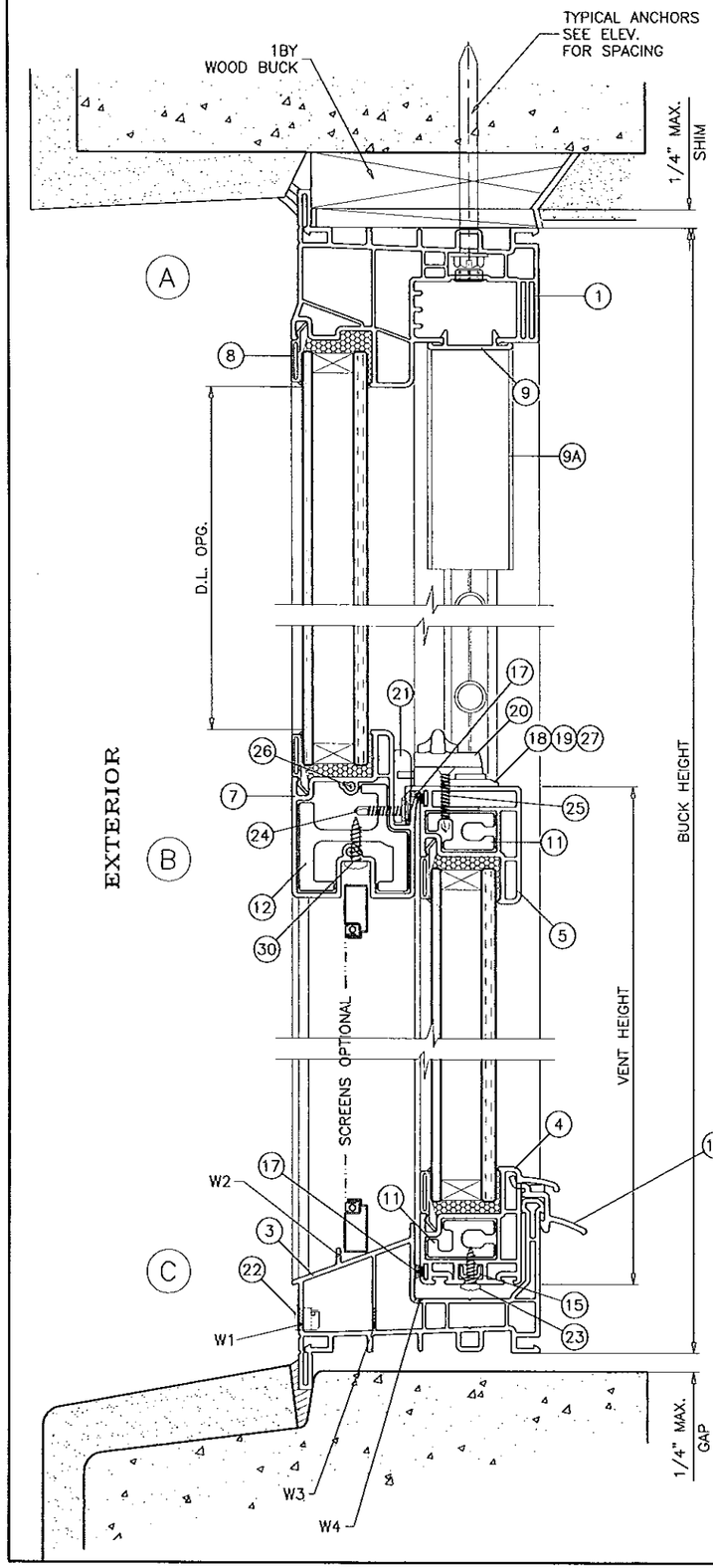

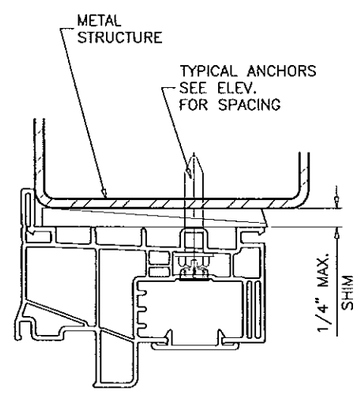

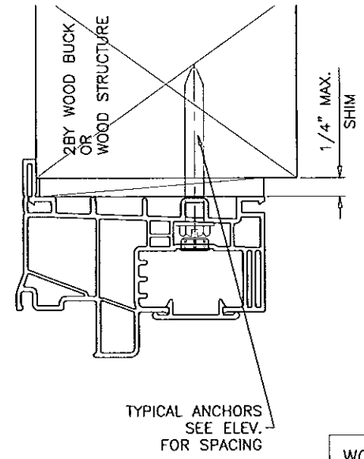

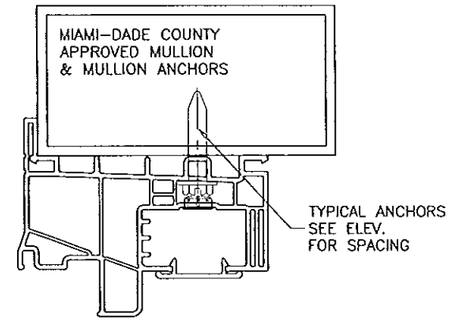

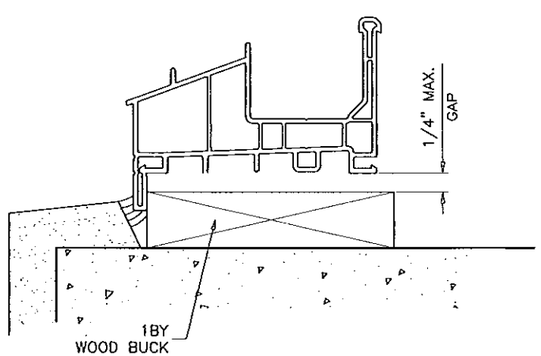

WOOD BUCKS AND METAL STRUCTURE NOT BY TRULITE MUST SUSTAIN LOADS IMPOSED BY GLAZING SYSTEM AND TRANSFER THEM TO THE BUILDING STRUCTURE.

SEALANTS:

FRAME, VENT CORNERS AND FIX. RAIL ENDS SEALED WITH WHITE/ALUMINUM COLORED SEALANT.

WEEPHOLES:

W1 = 1-9/16" X 5/16" WEEP HOLES AT 4-3/8" FROM EACH END WITH PLASTIC BAFFLE

W2 = 5/8" WEEP NOTCH AT EACH END

W3 = 3/8" X 1/4" WEEP HOLES AT EACH END

W4 = 1" X 1/8" WEEP HOLES AT 3-3/4" FROM EACH END

TYPICAL ANCHORS: SEE ELEV. FOR SPACING

1/4" DIA. TAPCON BY 'ITW' (Fu=120 KSI, Fy=92 KSI)
1/4" DIA. ULTRACON BY 'ELCO' (Fu=177 KSI, Fy=155 KSI)
INTO 2BY WOOD BUCKS OR WOOD STRUCTURES
1-3/8" MIN. PENETRATION INTO WOOD

THRU 1BY BUCKS INTO CONC. OR MASONRY
1-1/4" MIN. EMBED INTO CONC. OR MASONRY

DIRECTLY INTO CONC. OR MASONRY
1-1/4" MIN. EMBED INTO CONC. OR MASONRY

#12 SMS OR SELF DRILLING SCREWS (GRADE 2 CRS)
INTO METAL STRUCTURES

STEEL : 12 GA. MIN. (Fy = 36 KSI MIN.)
ALUMINUM : 1/8" THK. MIN. (6063-T5 MIN.)
(STEEL IN CONTACT WITH ALUMINUM TO BE PLATED OR PAINTED)

#12 SMS OR SELF DRILLING SCREWS (GRADE 2 CRS)

INTO MIAMI-DADE COUNTY APPROVED MULLIONS (MIN. THK. = .090")
(NO SHIM SPACE)

TYPICAL EDGE DISTANCE

INTO CONCRETE AND MASONRY = 1-1/2" MIN.
INTO WOOD STRUCTURE = 1" MIN.
INTO METAL STRUCTURE = 3/4" MIN.

CONCRETE AT HEAD, SILL OR JAMBS f'c = 3000 PSI MIN.
C-90 HOLLOW/FILLED BLOCK AT JAMBS f'm = 2000 PSI MIN.

Engr: JAVAD AHMAD
CIVIL
FLA. PE # 70592
C.A.N. 3538

OCT 25 2013

PRODUCT REVISED
as complying with the Florida Building Code
Acceptance No 13-0709.13
Expiration Date April 22, 2019
By Manuel Perez
Miami Dade Product Control

AL-FAROOQ CORPORATION
ENGINEERS & PRODUCT DEVELOPMENT
1235 S.W. 87 AVE
MIAMI, FLORIDA 33174
TEL. (305) 264-8100 FAX. (305) 262-6978

COMP-ANL\W09-11AWP

SERIES 10000 PVC SINGLE HUNG TILT WDW. (N.I.)

TRULITE WINDOW & DOOR SOLUTIONS, LLC
8130 N.W. 74TH AVE.
MEDLEY, FL. 33166
TEL. (305) 887-2646 FAX (305) 883-1309

revisions:

no	date	by	description
A	09.30.09		GENERAL REVISION
B	05.27.10		MANUF. NAME REVISED
C	12.23.11		MANUF. NAME REVISED
D	10.30.13		NO CHANGE THIS SHEET

date: 02-12-09
scale: 1/2" = 1"
dr. by: HAMID
chk. by:

drawing no. W09-11

sheet 3 of 8

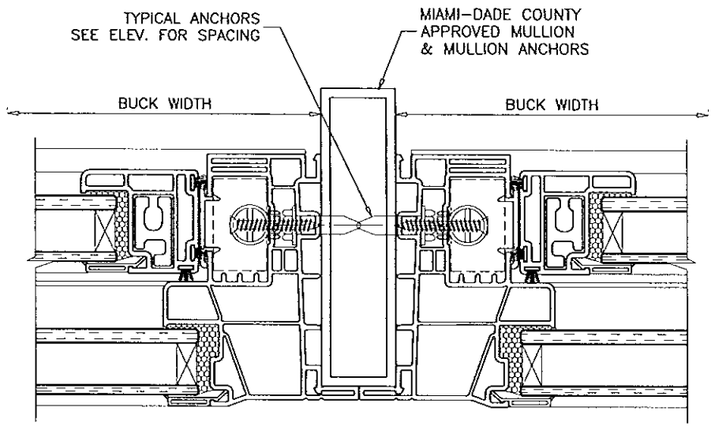

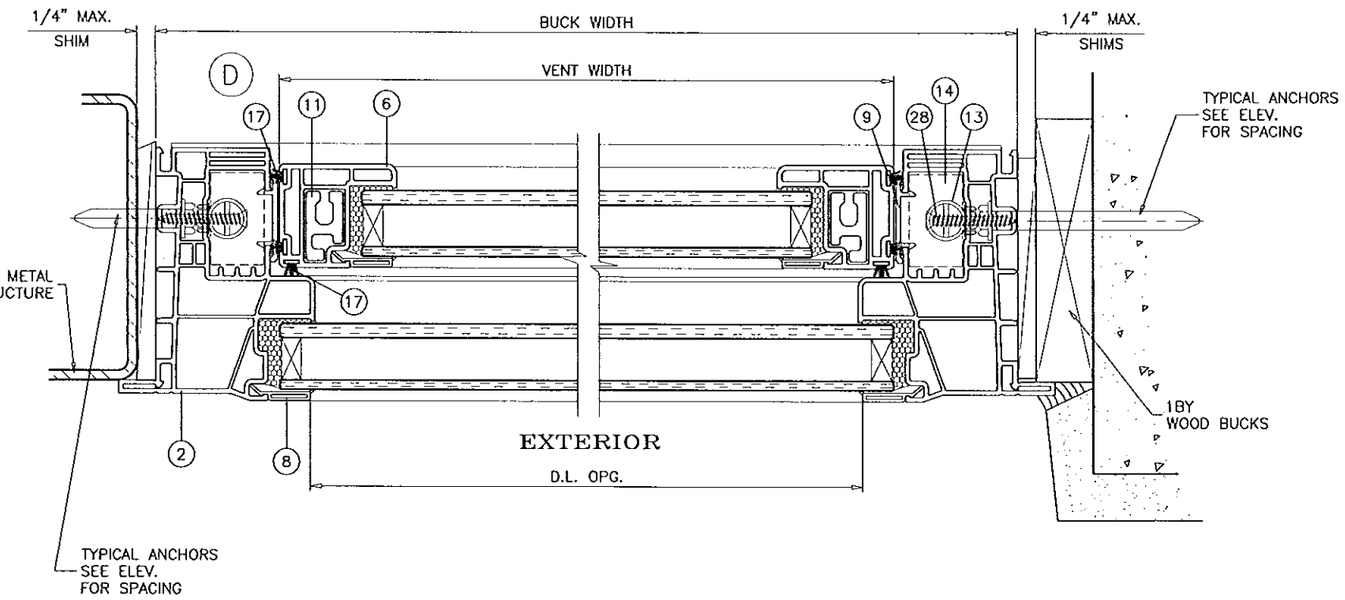

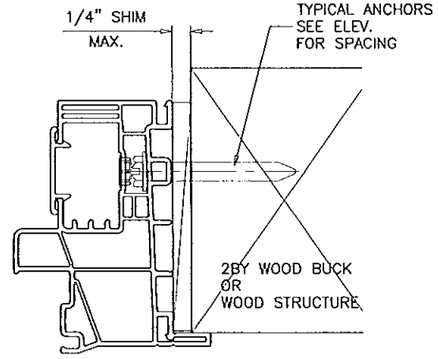

Engr: JAVAD AHMAD
CIVIL
FLA. PE # 70592
C.A.N. 3538

OCT 3 1 2013

PRODUCT REVISED
as complying with the Florida
Building Code
Acceptance No 13-0909.13
Expiration Date April 22, 2019
By Manuel Perez
Miami Dade Product Control

AL-FAROOQ CORPORATION
ENGINEERS & PRODUCT DEVELOPMENT
1235 S.W. 87 AVE
MIAMI, FLORIDA 33174
TEL. (305) 264-8100 FAX. (305) 262-6978

COMP-ANL\W09-11AWP

SERIES 10000 PVC SINGLE HUNG TILT WDW. (N.I.)

TRULITE WINDOW & DOOR SOLUTIONS, LLC
8130 N.W. 74TH AVE.
MEDLEY, FL. 33166
TEL. (305) 887-2646 FAX (305) 883-1309

revisions:

no	date	by	description
A	09.30.09		GENERAL REVISION
B	05.27.10		MANUF. NAME REVISED
C	12.23.11		MANUF. NAME REVISED
D	10.30.13		NO CHANGE THIS SHEET

date: 02-12-09
scale: 1/2" = 1"
dr. by: HAMID
chk. by:

drawing no.
W09-11

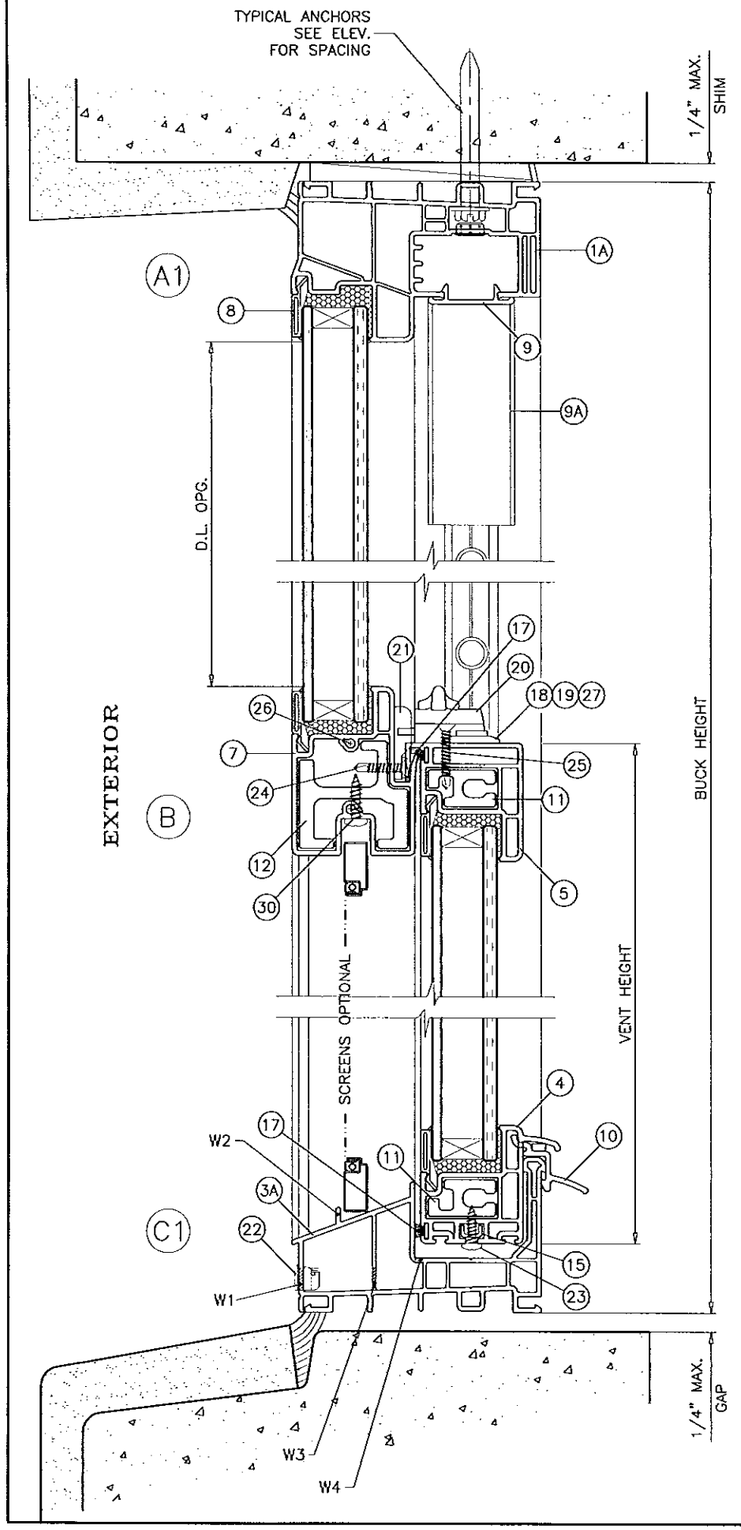

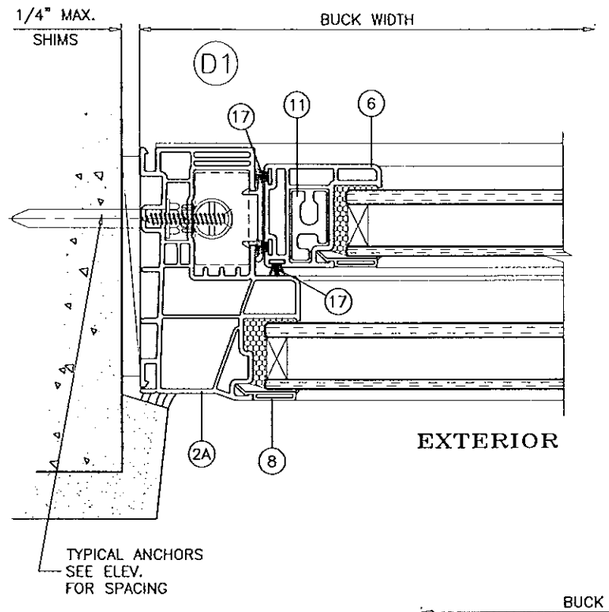

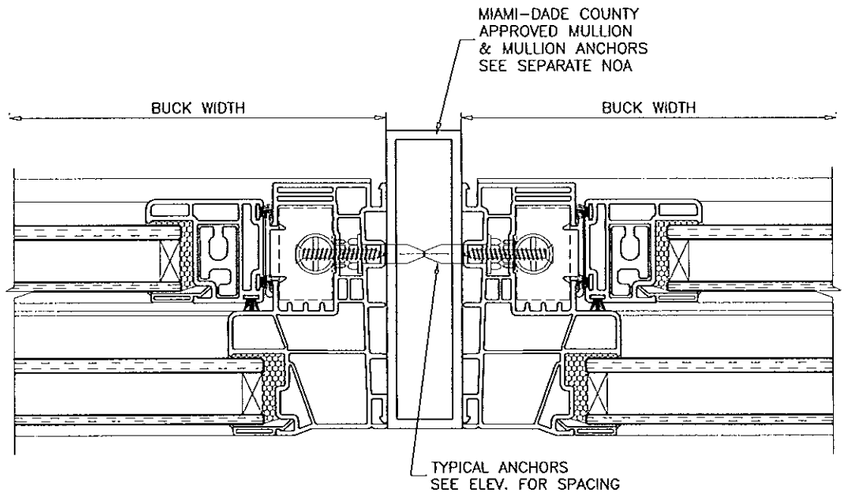

Engr: JAVAD AHMAD
CIVIL
FLA. PE # 70532
C.A.N. 3538

OCT 3 2013

PRODUCT REVISED
as complying with the Florida
Building Code
Acceptance No 13-0909.13
Expiration Date Apr. 22, 2019
By Manuel Perez
Miami Dade Product Control

AL-FAROOQ CORPORATION
ENGINEERS & PRODUCT DEVELOPMENT
1235 S.W. 87 AVE
MIAMI, FLORIDA 33174
TEL. (305) 264-8100 FAX. (305) 262-6978

COMP-ANL\W09-11AWP

SERIES 10000 PVC SINGLE HUNG TILT WDW. (N.I.)

TRULITE WINDOW & DOOR SOLUTIONS, LLC
8130 N.W. 74TH AVE.
MEDLEY, FL. 33166
TEL. (305) 887-2646 FAX (305) 883-1309

revisions:

no	date	by	description
A	09.30.09		GENERAL REVISION
B	05.27.10		MANUF. NAME REVISED
C	12.23.11		MANUF. NAME REVISED
D	10.30.13		NO CHANGE THIS SHEET

date: 02-12-09
scale: 1/2" = 1"
dr. by: HAMID
chk. by:

drawing no.
W09-11

sheet 5 of 8

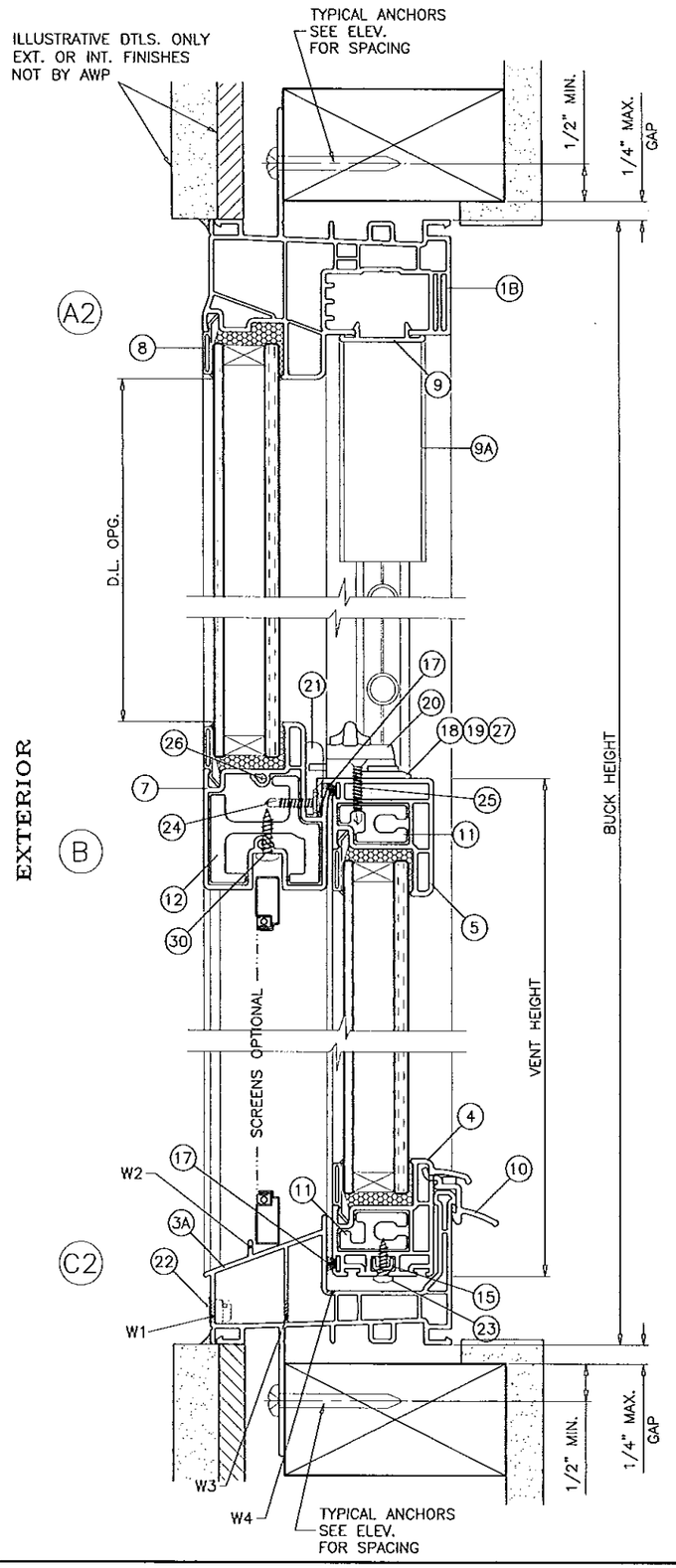

TYPICAL ANCHORS: SEE ELEV. FOR SPACING

#12 SMS (GRADE 2 CRS)

INTO 2BY WOOD BUCKS OR WOOD STRUCTURES
1-3/8" MIN. PENETRATION INTO WOOD

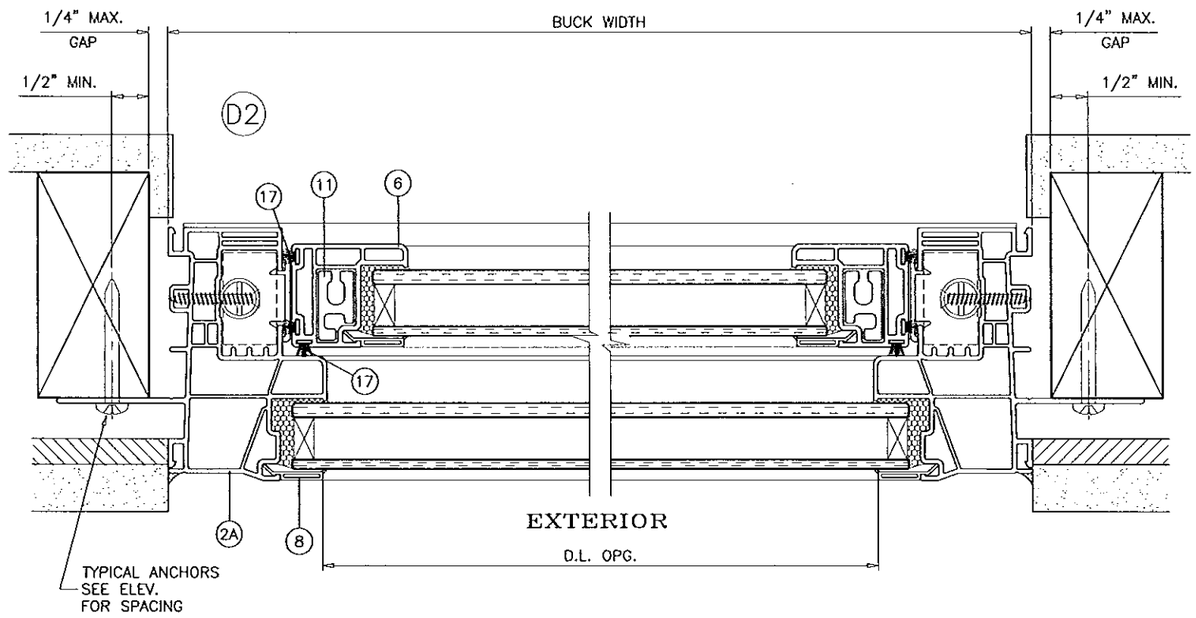

Engr: JAVAD AHMAD
CIVIL
FLA. PE # 70592
C.A.N. 3538

OCT 24 2013

PRODUCT REVISED
as complying with the Florida
Building Code
Acceptance No 13-0909.13
Expiration Date April 22, 2019
By
Miami Dade Product Control

AL-FAROOQ CORPORATION
ENGINEERS & PRODUCT DEVELOPMENT
1235 S.W. 87 AVE
MIAMI, FLORIDA 33174
TEL. (305) 264-8100 FAX. (305) 262-6978

COMP-ANL\W09-11AWP

SERIES 10000 PVC SINGLE HUNG TILT WDW. (N.I.)

TRULITE WINDOW & DOOR SOLUTIONS, LLC
8130 N.W. 74TH AVE.
MEDLEY, FL. 33166
TEL. (305) 887-2646 FAX (305) 883-1309

revisions:

no	date	by	description
A	09.30.09		GENERAL REVISION
B	05.27.10		MANUF. NAME REVISED
C	12.23.11		MANUF. NAME REVISED
D	10.30.13		NO CHANGE THIS SHEET

date: 02-12-09
scale: 1/2" = 1"
dr. by: HAMID
chk. by:

drawing no.
W09-11

sheet 6 of 8

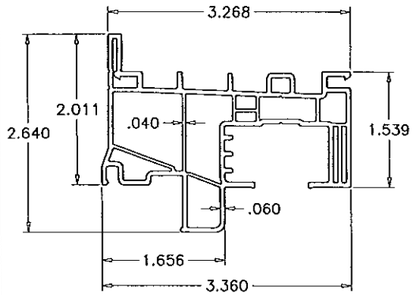

(1) (2) FLANGE FRAME HEAD/JAMB

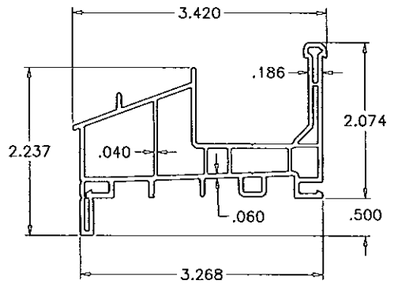

(3) FLANGE FRAME SILL

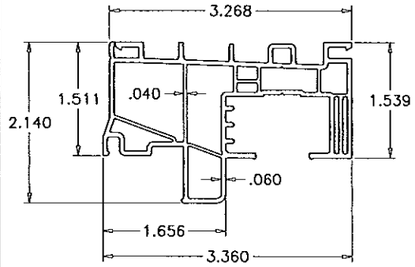

(1A) (2A) FLUSH FRAME HEAD/JAMB

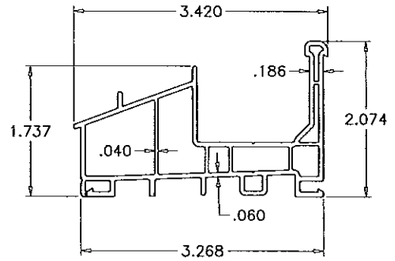

(3A) FLUSH FRAME SILL

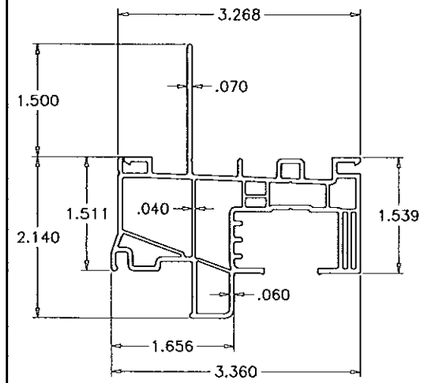

(1B) (2B) FIN FRAME HEAD/JAMB

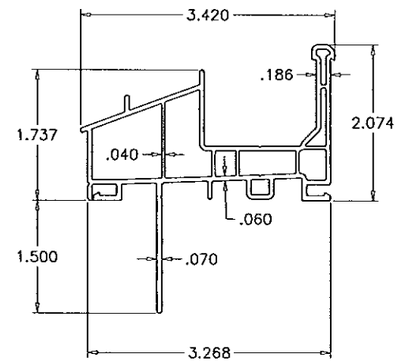

(3B) FIN FRAME SILL

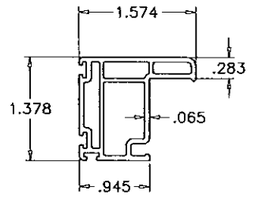

(6) VENT SIDE RAIL

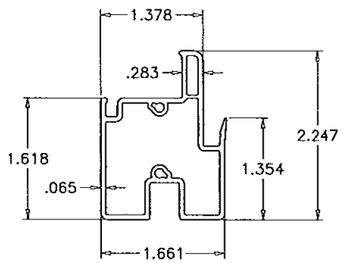

(7) FIX. MEETING RAIL

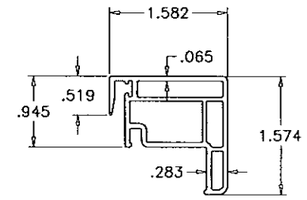

(5) VENT TOP RAIL

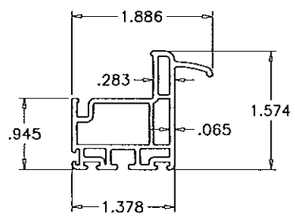

(4) VENT BOTTOM RAIL

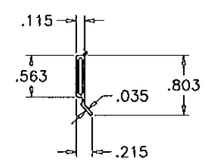

(8) GLAZING BEAD

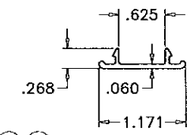

(9) (9A) HEAD/JAMB COVER/VENT STOP

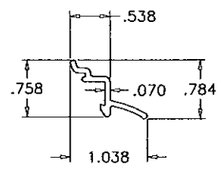

(10) LATCH LOCK

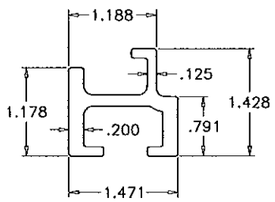

(12) FIX. MTG. RAIL STIFFENER

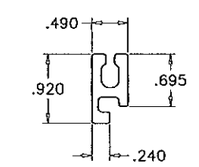

(11) VENT STIFFENER

Engr: JAVAD AHMAD
CIVIL
FLA. PE # 70592
C.A.N. 3538

OCT 3 1 2013

PRODUCT REVISED
as complying with the Florida
Building Code
Acceptance No 13-0909.13
Expiration Date April 22, 2019
By Manuel Perez
Miami Dade Product Control

AL-FAROOQ CORPORATION
ENGINEERS & PRODUCT DEVELOPMENT
1235 S.W. 87 AVE
MIAMI, FLORIDA 33174
TEL. (305) 264-8100 FAX. (305) 262-6978

COMP-ANL\W09-11AWP

SERIES 10000 PVC SINGLE HUNG TILT WDW. (N.I.)

TRULITE WINDOW & DOOR SOLUTIONS, LLC
8130 N.W. 74TH AVE.
MEDLEY, FL. 33166
TEL. (305) 887-2646 FAX (305) 883-1309

revisions:

no	date	by	description
A	09.30.09		GENERAL REVISION
B	05.27.10		MANUF. NAME REVISED
C	12.23.11		MANUF. NAME REVISED
D	10.30.13		NO CHANGE THIS SHEET

date: 02-12-09
scale: 1/2" = 1"
dr. by: HAMID
chk. by:

drawing no.
W09-11

ITEM	PART #	QUANTITY	DESCRIPTION	MATERIAL	MANF./SUPPLIER/REMARKS
1	YV-10001	1	FLANGE FRAME HEAD	PVC	QUANEX BUILDING PRODUCTS INC.
1A	YV-10001	1	FLUSH FRAME HEAD	PVC	QUANEX BUILDING PRODUCTS INC.
1B	YV-10001	1	FIN FRAME HEAD	PVC	QUANEX BUILDING PRODUCTS INC.
2	YV-10001	2	FLANGE FRAME JAMB	PVC	QUANEX BUILDING PRODUCTS INC.
2A	YV-10001	2	FLUSH FRAME JAMB	PVC	QUANEX BUILDING PRODUCTS INC.
2B	YV-10001	2	FIN FRAME JAMB	PVC	QUANEX BUILDING PRODUCTS INC.
3	YV-10002	1	FLANGE FRAME SILL	PVC	QUANEX BUILDING PRODUCTS INC.
3A	YV-10002	1	FLUSH FRAME SILL	PVC	QUANEX BUILDING PRODUCTS INC.
3B	YV-10002	1	FIN FRAME SILL	PVC	QUANEX BUILDING PRODUCTS INC.
4	YV-10003	1	VENT BOTTOM RAIL	PVC	QUANEX BUILDING PRODUCTS INC.
5	YV-10004	1	VENT INTERLOCK STILE	PVC	QUANEX BUILDING PRODUCTS INC.
6	YV-10005	2	VENT SIDE STILE	PVC	QUANEX BUILDING PRODUCTS INC.
7	YV-10006	1	FIXED INTERLOCK	PVC	QUANEX BUILDING PRODUCTS INC.
8	YV-10007	8	GLAZING BEAD	PVC	QUANEX BUILDING PRODUCTS INC.
9	YV-10008	3	HEAD/JAMB COVER	PVC	QUANEX BUILDING PRODUCTS INC.
9A	YV-10008	2	VENT STOP (3" LONG)	PVC	QUANEX BUILDING PRODUCTS INC.
10	YV-10009	1	VENT BOTTOM LATCH LOCK AT MIDSPAN OF BOT. RAIL	PVC	QUANEX BUILDING PRODUCTS INC.
11	YE-1104	4/VENT	VENT REINFORCEMENT	6063-T6	--
12	YE-1103	1/EACH	FIXED INTERLOCK REINFORCEMENT	6063-T6	--
13	--	2/VENT	"ULTRA-LIFT" BALANCE	--	"CALDWELL"
14	YH-5010	2/VENT	BALANCE CARRIER ASSY. (MOD. 16H101)	-	"CALDWELL"
15	YH-524SS	2/VENT	PIVOT BAR (MOD. 0614523-SS) AT EACH END OF BOT. RAIL	S. STEEL	ADEPT
16	YH-1316	AS REQ'D.	ø 3/8" HOLE PLUG (MOD. C-13856)	NYLON	ASHLAND
17	YH-4026	AS REQ'D.	.187" x .270" FIN SEAL PILE WITH PLASTIC FIN W'STRIP	-	"ULTRAFAB"
18	YH-590RH	1/VENT	TILT LATCH (MOD. 46.13.32.101 RIGHT) AT END OF TOP RAIL	-	"TRUTH"
19	YH-590LH	1/VENT	TILT LATCH (MOD. 46.13.32.102 LEFT) AT END OF TOP RAIL	-	"TRUTH"
20	YH-595	2/VENT	SWEEP LOCK (MOD. 677208) AT 6" FROM EACH END	-	"DECO"
21	YH-597	2/VENT	FACE MOUNT KEEPER (MOD. 677133) AT LOCK LOCATIONS	-	"DECO"
22	YH-1610	2	WEEP HOLE COVER	-	"ASHLAND"
23	YF-81	2/BAR	#6 x 1/2" P.H. PH.DR. PIVOT BAR SCREW	CAD PLATED CRS.	-
24	YF-82	2/KEEPER	#6 x 3/4" F.H. TEK. SQ.DR. KEEPER SCREW	CAD PLATED CRS.	-
25	YF-83	2/LOCK	#8 x 7/8" F.H. TEK. PH.DR. SWEEP LOCK SCREW	CAD PLATED CRS.	-
26	YF-78SH	4	#8 x 2-1/2" P.H. SS. SQ.DR. FIXED MTG. RAIL SCREW	S. STEEL	(2) AT EACH END
27	YF-85	1/LATCH	#6 x 1/2" F.H. SS. SQ.DR. TILT LATCH SCREW	S. STEEL	-
28	YF-90	1/BAL.	#8 x 1-1/4" F.H. SS. PH.DR. BALANCE SCREW	S. STEEL	-
30	YF-21SS	5/VENT	#8 x 1/2" P.H. SS. PH.DR. FIXED MR. REINF. SCREW	S. STEEL	AT 4" FROM ENDS & 10-1/4" O.C.

WHITE PVC EXTRUSIONS TO BE LABELED WITH AAMA EXTRUDER CODE, EXTRUDER NAME, CITY, STATE AND 'MDCA'.

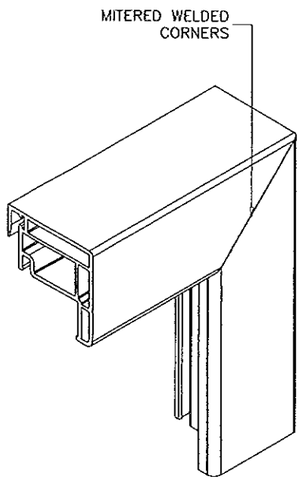

VENT CORNERS

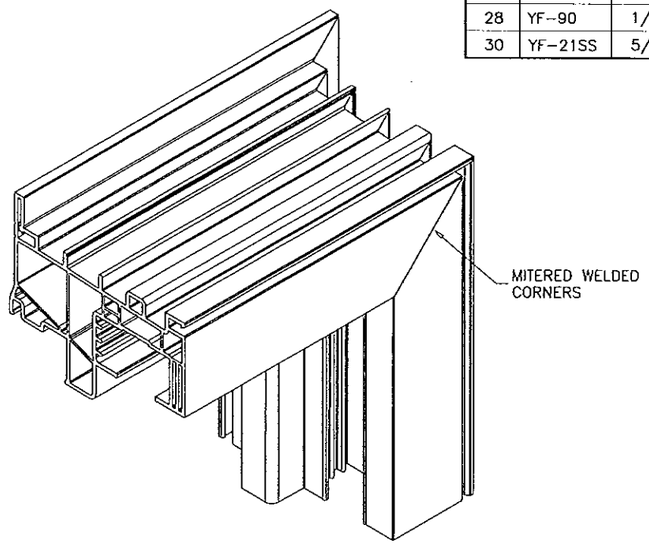

FRAME CORNERS

Engr: JAVAD AHMAD
CIVIL
FLA. PE # 70592
C.A.N. 3538

OCT 31 2013

PRODUCT REVISED
is complying with the Florida Building Code
Acceptance No 13-0909.13
Expiration Date Apr. 22, 2019
By Manuel Perez
Miami-Dade Product Control

AL-FAROOQ CORPORATION
ENGINEERS & PRODUCT DEVELOPMENT
1235 S.W. 87 AVE
MIAMI, FLORIDA 33174
TEL. (305) 264-8100 FAX. (305) 262-6978

COMP-ANL\W09-11AWP

SERIES 10000 PVC SINGLE HUNG TILT WDW. (N.I.)

TRULITE WINDOW & DOOR SOLUTIONS, LLC
8130 N.W. 74TH AVE.
MEDLEY, FL. 33166
TEL. (305) 887-2646 FAX (305) 883-1309

revisions:

no	date	by	description
A	09.30.09		GENERAL REVISION
B	05.27.10		MANUF. NAME REVISED
C	12.23.11		MANUF. NAME REVISED
D	10.30.13		PVC EXTRUSION NOTE ADDED

date: 02-12-09
scale: 1/2" = 1"
dr. by: HAMID
chk. by:

drawing no.
W09-11

sheet 8 of 8