MIAMI-DADE COUNTY
PRODUCT CONTROL SECTION
11805 SW 26 Street, Room 208
Miami, Florida 33175-2474
T (786) 315-2590 F (786) 315-2599
www.miamidade.gov/economy

DEPARTMENT OF REGULATORY AND ECONOMIC RESOURCES (RER)
BOARD AND CODE ADMINISTRATION DIVISION

NOTICE OF ACCEPTANCE (NOA)

ECO Windows Systems, LLC
9114 N. W. 106th Street,
Medley, FL 33178

SCOPE:

This NOA is being issued under the applicable rules and regulations governing the use of construction materials. The documentation submitted has been reviewed and accepted by Miami-Dade County RER -Product Control Section to be used in Miami Dade County and other areas where allowed by the Authority Having Jurisdiction (AHJ).

This NOA shall not be valid after the expiration date stated below. The Miami-Dade County Product Control Section (In Miami Dade County) and/or the AHJ (in areas other than Miami Dade County) reserve the right to have this product or material tested for quality assurance purposes. If this product or material fails to perform in the accepted manner, the manufacturer will incur the expense of such testing and the AHJ may immediately revoke, modify, or suspend the use of such product or material within their jurisdiction. RER reserves the right to revoke this acceptance, if it is determined by Miami-Dade County Product Control Section that this product or material fails to meet the requirements of the applicable building code.

This product is approved as described herein, and has been designed to comply with the Florida Building Code, including the High Velocity Hurricane Zone.

DESCRIPTION: Series "700" Aluminum Sliding Glass Door w/ Reinforcements-L.M.I.

APPROVAL DOCUMENT: Drawing No. **W13-49 REV A**, titled "Series- 700 Alum SLD. Glass Door (L.M.I.)", sheets 1 through 12 of 12, prepared by Al-Farooq Corporation, dated 09/27/13 and last revised on MAR 10, 2013, signed and sealed by Javad Ahmad, P.E., bearing the Miami-Dade County Product Control Approval stamp with the Notice of Acceptance number and approval date by the Miami-Dade County Product Control Section.

MISSILE IMPACT RATING: Large and Small Missile Impact Resistant

Limitations:

1. See Design Pressures Vs Reinforcing, glass types and anchor capacity charts in sheet 5. Exterior (positive) design pressures are limited to **+70 PSF** w / **2-3/4"** sill riser and **+47.0 PSF** w/ **2"** sill riser. Lower design Pressure from charts applies to entire system.
2. See approved configurations in sheets 1 thru 4. The max frame width not to exceed 192".

LABELING: Each unit shall bear a permanent label with the manufacturer's name or logo, city, state and series and following statement: "Miami-Dade County Product Control Approved", noted herein.

RENEWAL of this NOA shall be considered after a renewal application has been filed and there has been no change in the applicable building code negatively affecting the performance of this product.

TERMINATION of this NOA will occur after the expiration date or if there has been a revision or change in the materials, use, and/or manufacture of the product or process. Misuse of this NOA as an endorsement of any product, for sales, advertising or any other purposes shall automatically terminate this NOA. Failure to comply with any section of this NOA shall be cause for termination and removal of NOA.

ADVERTISEMENT: The NOA number preceded by the words Miami-Dade County, Florida, and followed by the expiration date may be displayed in advertising literature. If any portion of the NOA is displayed, then it shall be done in its entirety.

INSPECTION: A copy of this entire NOA shall be provided to the user by the manufacturer or its distributors and shall be available for inspection at the job site at the request of the Building Official.

This NOA consists of this page 1 and evidence pages E-1, as well as approval document mentioned above.

The submitted documentation was reviewed by **Ishaq I. Chanda, P.E.**

MIAMI-DADE COUNTY APPROVED
3/14/14

NOTICE OF ACCEPTANCE: EVIDENCE SUBMITTED

A. DRAWINGS

1. Manufacturer's die drawings and sections
2. Drawing No. **W13-49 REV A**, titled "Series- 700 Alum SLD. Glass Door (L.M.I.)", sheets 1 through 12 of 12, prepared by Al-Farooq Corporation, dated 09/27/13 and last revised on MAR 10, 2013, signed and sealed by Javad Ahmad, P.E.

B. TESTS

1. Test reports on: 1) Air Infiltration Test, per FBC, TAS 202-94
   2) Uniform Static Air Pressure Test, Loading per FBC TAS 202-94
   3) Water Resistance Test, per FBC, TAS 202-94
   4) Large Missile Impact Test per FBC, TAS 201-94
   5) Cyclic Wind Pressure Loading per FBC, TAS 203-94
   6) Forced Entry Test, per FBC 2411 3.2.1, TAS 202-94

   along with marked-up drawings and installation diagrams of Alum sliding Glass doors, prepared by Fenestration Testing Lab, Inc., Test Report No. **FTL-7405** dated 09/13/2013 and last revised on 02/10/2014, signed and sealed by Marlin D. Brinson, P. E.
   Note: The above referenced test report has an addendum letter dated FEB 10, 2014, issued by Fenestration Testing Lab, Inc., signed by Ms. Iliana Sanchez, test report Author.

C. CALCULATIONS

1. Anchor verification calculations and structural analysis, complying with FBC-2010, prepared by Al Farooq Corporation, dated 12/12/13 and last revised on JAN 27, 2014, signed and sealed by Javad Ahmad, P.E.
2. Glazing complies w/ ASTME-1300-02 & -04.

D. QUALITY ASSURANCE

1. Miami Dade Department of Regulatory and Economic Resources (RER).

E. MATERIAL CERTIFICATIONS

1. Notice of Acceptance No. **11-0624.01** issued to E.I. DuPont DeNemours & Co., Inc. for their "**Butacite ® PVB interlayer**", expiring on 12/11/16.
2. Notice of Acceptance No. **11-0624.02** issued to E.I. DuPont De Nemours & CO., Inc. for "DuPont SentryGlas ® Interlayer", expiring on 01/14/2017.

F. STATEMENTS

1. Statement letter of conformance and letter of no financial interest, prepared by Al Farooq Corporation, dated 12/12/13, signed and sealed by Javad Ahmad, P.E.
2. Lab compliance as part of the above referenced test report.

G. OTHER

1. Test proposal, dated 03/25/13 approved by Jaime D. Gascon, P.E.

Ishaq I. Chanda

Ishaq I. Chanda, P.E.
Product Control Examiner
NOA No. 13-0912.02
Expiration Date: March 20, 2019
Approval Date: March 20, 2014

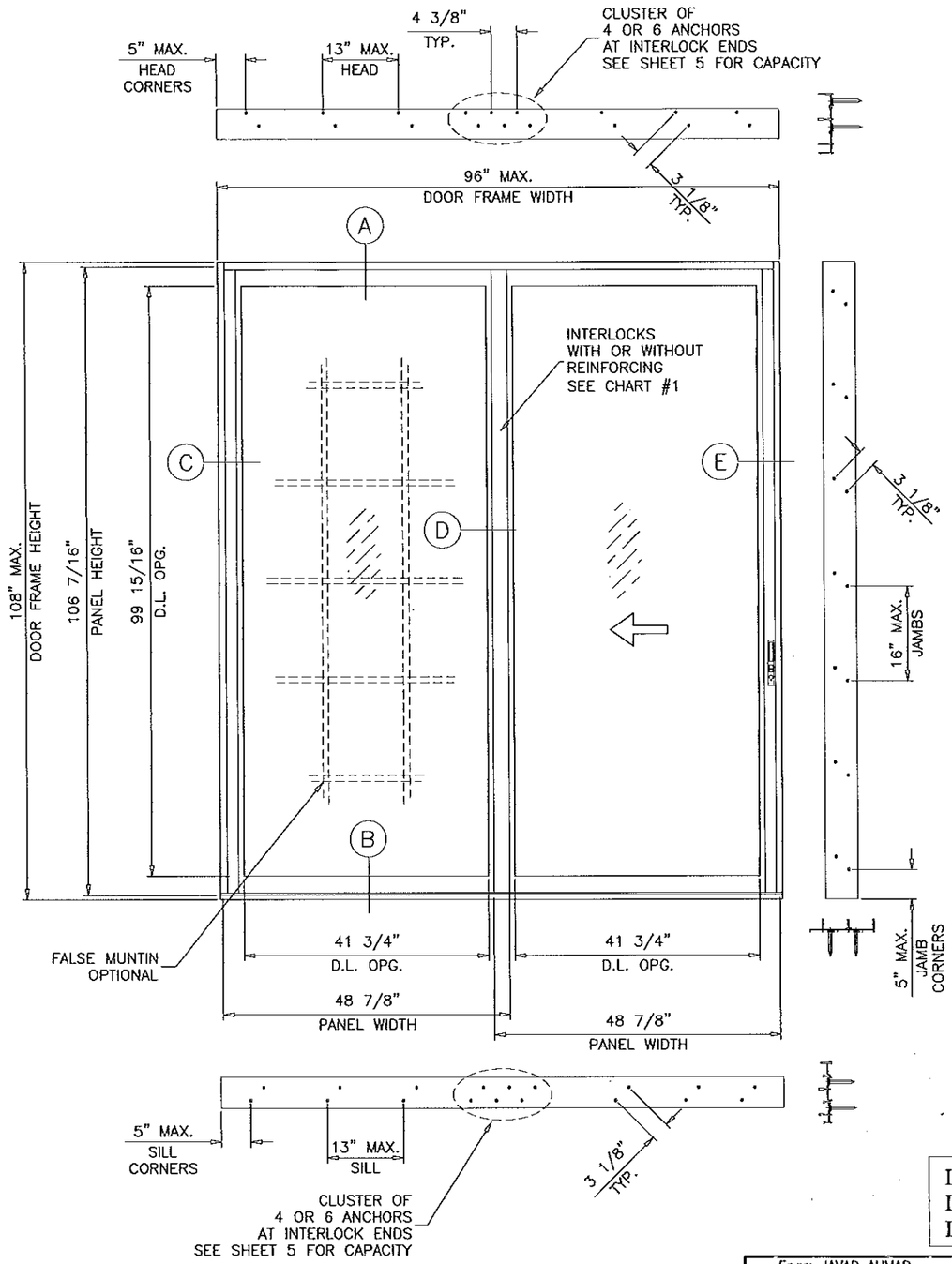

TYPICAL ELEVATION

OX

INSTRUCTIONS:

USE CHARTS AS FOLLOWS.

STEP 1 SEE CHART #1 ON SHEET 5 FOR GLASS CAPACITY AND REINFORCING REQUIREMENTS.

STEP 2 SELECT SILL TYPE FROM SHEET 7 AND LIMIT EXT.(+) DESIGN PRESSURE AS SHOWN ON DETAIL.

STEP 3 SEE CHART #2 ON SHEET 5 FOR ANCHOR CAPACITY.

STEP 4 THE LOWEST VALUE RESULTING FROM STEPS 1 THRU 3 SHALL APPLY TO ENTIRE SYSTEM.

DAYLITE OPENINGS WIDTHS:
FIXED STILE–INTERLOCK = PANEL WIDTH – 7.125"
INTERLOCK–ASTRAGAL = PANEL WIDTH – 7.250"

DAYLITE OPENING HEIGHT:
PANEL HEIGHT – 6.50"

PANEL HEIGHT = DOOR FRAME HEIGHT – 1.5625"

THESE DOORS ARE RATED FOR LARGE & SMALL MISSILE IMPACT. SHUTTERS ARE NOT REQUIRED.

SERIES–700
ALUMINUM SLIDING GLASS DOOR

THIS PRODUCT HAS BEEN DESIGNED AND TESTED TO COMPLY WITH THE REQUIREMENTS OF THE FLORIDA BUILDING CODE INCLUDING HIGH VELOCITY HURRICANE ZONE (HVHZ).

1BY OR 2BY WOOD BUCKS BY OTHERS, MUST BE ANCHORED PROPERLY TO TRANSFER LOADS TO THE STRUCTURE.

ANCHORS SHALL BE AS LISTED, SPACED AS SHOWN ON DETAILS, ANCHORS EMBEDMENT TO BASE MATERIAL SHALL BE BEYOND WALL DRESSING OR STUCCO.

ANCHORING OR LOADING CONDITIONS NOT SHOWN IN THESE DETAILS ARE NOT PART OF THIS APPROVAL.

A LOAD DURATION INCREASE IS USED IN DESIGN OF ANCHORS INTO WOOD ONLY.

ALL SHIMS TO BE HIGH IMPACT, NON–METALLIC AND NON–COMPRESSIBLE.

MATERIALS INCLUDING BUT NOT LIMITED TO STEEL/METAL SCREWS, THAT COME INTO CONTACT WITH OTHER DISSIMILAR MATERIALS SHALL MEET THE REQUIREMENTS OF THE FLORIDA BLDG. CODE SECTION 2003.8.4.

Approved as complying with the Florida Building Code
Date MARCH 20, 2014
NOAC 13-0912.02
Miami-Dade Product Control
By

LAMINATED GLASS
INSUL. LAM. GLASS
LARGE MISSILE IMPACT

Engr: JAVAD AHMAD
CIVIL
FLA. PE # 70592
C.A.N. 3538

MAR 10 2014

AL-FAROOQ CORPORATION
ENGINEERS & PRODUCT DEVELOPMENT
1235 S.W. 87 AVE
MIAMI, FLORIDA 33174
TEL. (305) 264-8100 FAX. (305) 262-6978

COMP–ANL\W13–49ECO

SERIES–700 ALUM SLIDING GLASS DOOR (L.M.I.)

ECO WINDOW SYSTEMS, LLC.
9114 N.W. 106 STREET
MEDLEY, FL. 33178
TEL. (305) 885–5299

revisions:

no	date	by	description
A	01.16.14	RER	REV. PER COMMENTS

date: 09–27–13
scale: 1/2"=1'–0"
dr. by: HAMID
chk. by:

drawing no.
W13–49

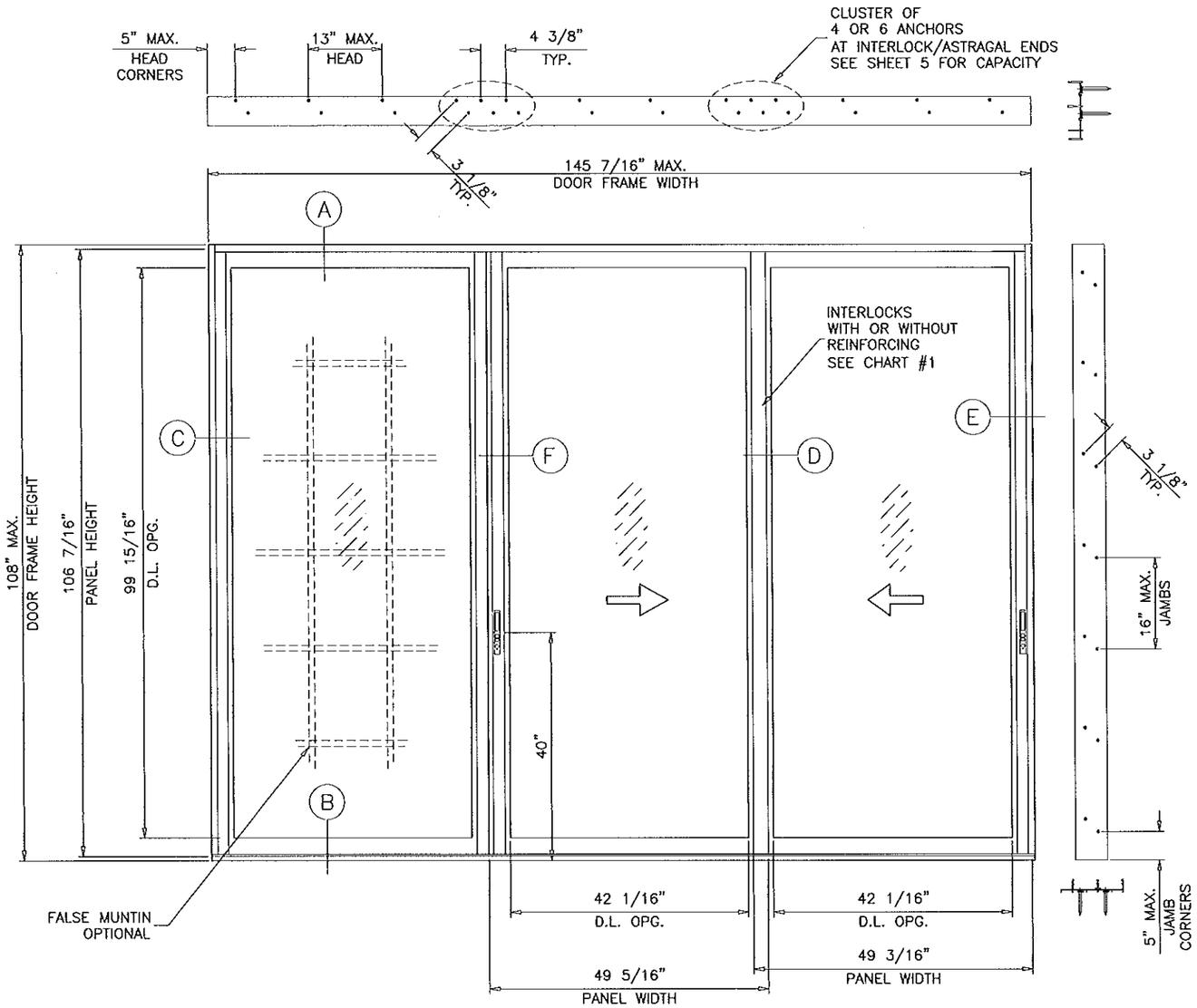

TYPICAL ELEVATION

OXX

Approved as complying with the Florida Building Code
Date 3/20/14
NOA# 13-0912.02
Miami Dade Product Control
By

Engr: JAVAD AHMAD
CIVIL
FLA. PE # 70592
C.A.N. 3538

MAR 1 7 2014

AL-FAROOQ CORPORATION
ENGINEERS & PRODUCT DEVELOPMENT
1235 S.W. 87 AVE
MIAMI, FLORIDA 33174
TEL. (305) 264-8100 FAX. (305) 262-6978

COMP-ANL\W13-49ECO

SERIES-700 ALUM SLIDING GLASS DOOR (L.M.I.)

ECO WINDOW SYSTEMS, LLC.
9114 N.W. 106 STREET
MEDLEY, FL. 33178
TEL. (305) 885-5299

revisions:

no	date	by	description
A	01.16.14		REV. PER RER COMMENTS

date: 09-27-13
scale: 1/2"=1'-0"
dr. by: HAMID
chk. by:

drawing no.
W13-49

sheet 2 of 12

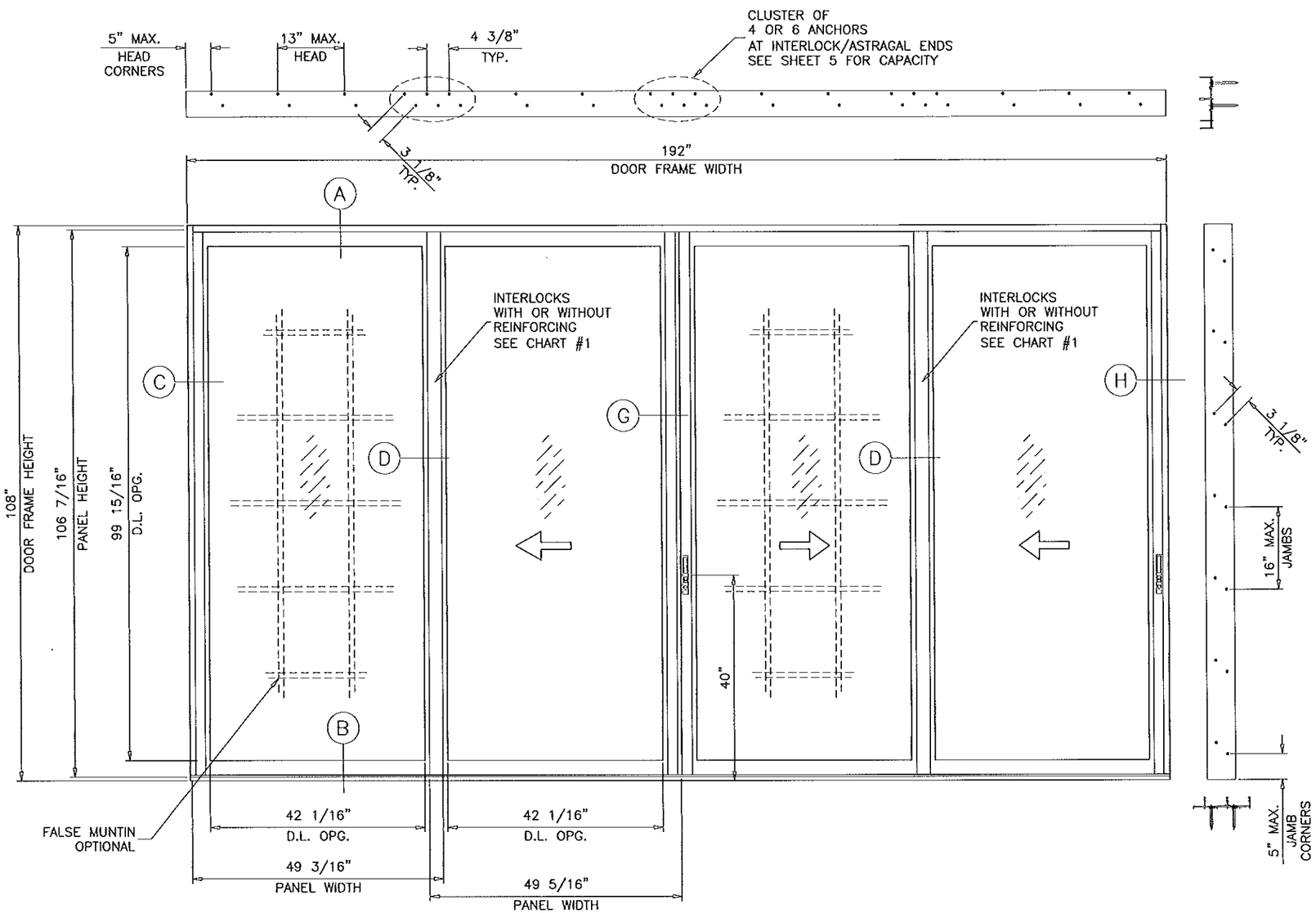

TYPICAL ELEVATION

OXXX

Approved as complying with the Florida Building Code
Date 3/20/14
NOA# 13-0912.02
Miami Dade Product Control
By

Engr: JAVAD AHMAD
CIVIL
FLA. PE # 70592
C.A.N. 3538

AL-FAROOQ CORPORATION
ENGINEERS & PRODUCT DEVELOPMENT
1235 S.W. 87 AVE
MIAMI, FLORIDA 33174
TEL. (305) 264-8100 FAX. (305) 262-6978
COMP-ANL\W13-49ECO

SERIES-700 ALUM SLIDING GLASS DOOR (L.M.I.)

ECO WINDOW SYSTEMS, LLC.
9114 N.W. 106 STREET
MEDLEY, FL. 33178
TEL. (305) 885-5299

revisions:

no	date	by	description
A	01.16.14		REV. PER RER COMMENTS

date: 09-27-13
scale: 1/2"=1'-0"
dr. by: HAMID
chk. by:

drawing no.
W13-49

sheet 3 of 12

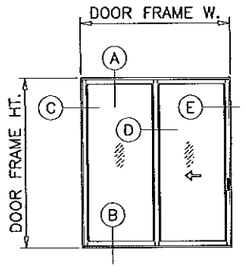

OX (SHOWN)
XO
XX

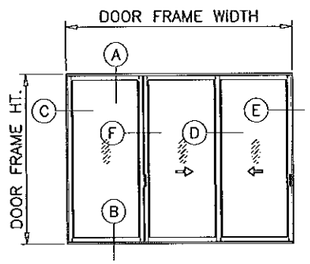

OXX (SHOWN)
XXO

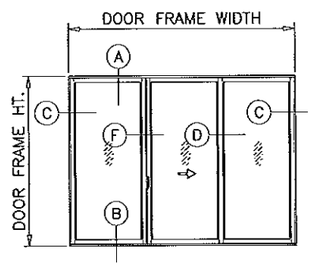

OXO (SHOWN)

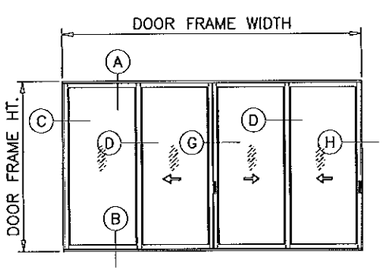

OXXX (SHOWN)
OXXO
XXXX

APPROVED CONFIGURATIONS

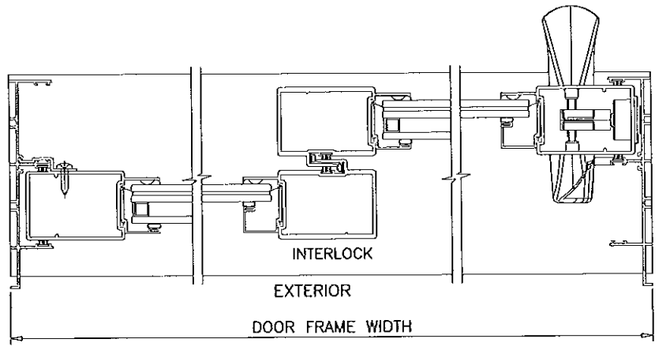

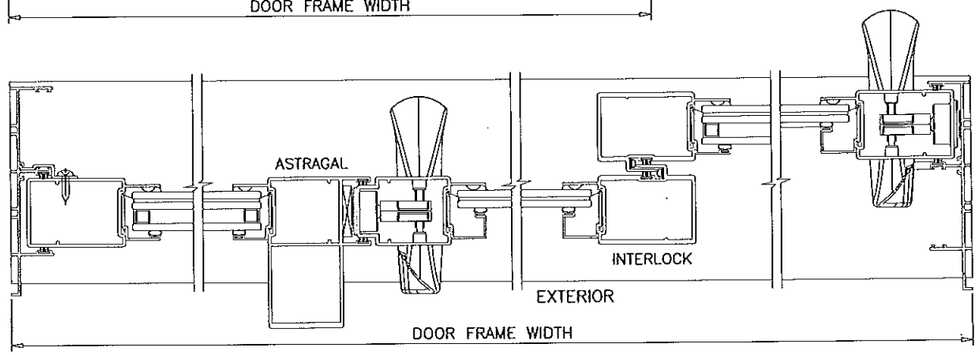

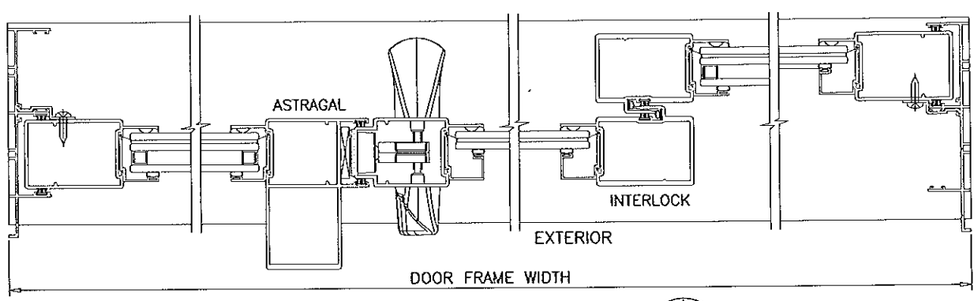

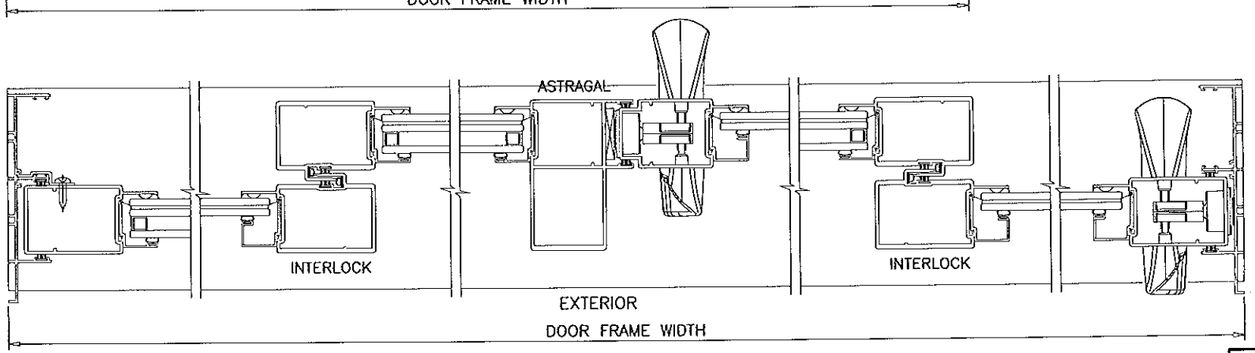

NOTE:

1. CONFIGURATIONS SHOWN FOR ILLUSTRATION PURPOSES ONLY.
2. FOR APPLICABLE DESIGN PRESSURES AND REINFORCEMENTS REQUIREMENTS SEE SHEET 5.
3. FOR ANCHOR DETAILS SEE SHEETS 7 THRU 9.

Approved as complying with the Florida Building Code
Date 3/20/14
NOA# 13-0912.06
Miami-Dade Product Control
By

Engr: JAVAD AHMAD
CIVIL
FLA. PE # 70592
C.A.N. 3538

AL-FAROOQ CORPORATION
ENGINEERS & PRODUCT DEVELOPMENT
1235 S.W. 87 AVE
MIAMI, FLORIDA 33174
TEL. (305) 264-8100 FAX. (305) 262-6978

COMP-ANL\W13-49ECO

SERIES-700 ALUM SLIDING GLASS DOOR (L.M.I.)

ECO WINDOW SYSTEMS, LLC.
9114 N.W. 106 STREET
MEDLEY, FL. 33178
TEL. (305) 885-5299

revisions:

no	date	by	description
A	01.16.14		REV. PER RER COMMENTS

date: 09-27-13
scale: 1/2"=1'-0"
dr. by: HAMID
chk. by:

drawing no.
W13-49

CHART #1

DESIGN LOAD CAPACITY – PSF (GLASS)					
AVERAGE PANEL WIDTH INCHES	DOOR FRAME HEIGHT INCHES	GLASS TYPES 'B', 'B1' WITHOUT REINF.		GLASS TYPES 'A', 'A1' WITH REINF.	
		EXT.(+)	INT.(–)	EXT.(+)	INT.(–)
30	82	70.0	80.0	70.0	80.0
36		70.0	80.0	70.0	80.0
42		70.0	80.0	70.0	80.0
48		70.0	80.0	70.0	80.0
54		62.2	71.1	62.2	71.1
30	84	70.0	80.0	70.0	80.0
36		70.0	80.0	70.0	80.0
42		70.0	80.0	70.0	80.0
48		70.0	80.0	70.0	80.0
54		62.2	71.1	62.2	71.0
30	90	70.0	80.0	70.0	80.0
36		70.0	80.0	70.0	80.0
42		70.0	80.0	70.0	80.0
48		70.0	80.0	70.0	80.0
54		–	–	62.2	71.1
30	96	70.0	80.0	70.0	80.0
36		70.0	80.0	70.0	80.0
42		70.0	80.0	70.0	80.0
48		70.0	80.0	70.0	80.0
54		–	–	62.2	71.1
30	98	70.0	80.0	70.0	80.0
36		70.0	80.0	70.0	80.0
42		70.0	80.0	70.0	80.0
48		70.0	80.0	70.0	80.0
30	102	–	–	70.0	80.0
36		–	–	70.0	80.0
42		–	–	70.0	80.0
48		–	–	70.0	80.0
30	108	–	–	70.0	80.0
36		–	–	70.0	80.0
42		–	–	70.0	80.0
48		–	–	70.0	80.0

CHART #2

LOAD CAPACITY – PSF (ANCHORS)					
AVERAGE PANEL WIDTH INCHES	DOOR FRAME HEIGHT INCHES	4 ANCHORS AT MTG. STILE ENDS		6 ANCHORS AT MTG. STILE ENDS	
		EXT.(+)	INT.(–)	EXT.(+)	INT.(–)
30	82	70.0	80.0	70.0	80.0
36		70.0	80.0	70.0	80.0
42		70.0	80.0	70.0	80.0
48		70.0	75.2	70.0	80.0
54		62.2	70.5	62.2	71.1
30	84	70.0	80.0	70.0	80.0
36		70.0	80.0	70.0	80.0
42		70.0	79.1	70.0	80.0
48		70.0	72.7	70.0	80.0
54		62.2	68.0	62.2	71.1
30	90	70.0	80.0	70.0	80.0
36		70.0	80.0	70.0	80.0
42		70.0	72.2	70.0	80.0
48		66.1	66.1	70.0	80.0
54		61.5	61.5	62.2	71.1
30	96	70.0	80.0	70.0	80.0
36		70.0	74.6	70.0	80.0
42		66.5	66.5	70.0	80.0
48		60.6	60.6	70.0	80.0
54		56.2	56.2	62.2	71.1
30	98	70.0	80.0	70.0	80.0
36		70.0	72.7	70.0	80.0
42		64.7	64.7	70.0	80.0
48		58.9	58.9	70.0	80.0
30	102	70.0	80.0	70.0	80.0
36		69.2	69.2	70.0	80.0
42		61.5	61.5	70.0	80.0
48		55.9	55.9	70.0	80.0
30	108	70.0	75.0	70.0	80.0
36		64.6	64.6	70.0	80.0
42		57.3	57.3	70.0	80.0
48		51.9	51.9	70.0	77.9

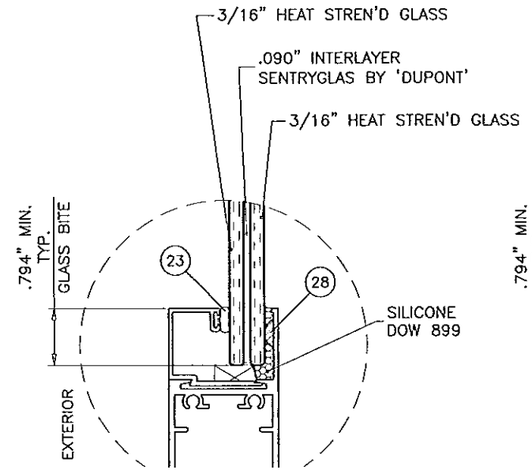

GLASS TYPE 'A'
7/16" OVERALL LAM. GLASS

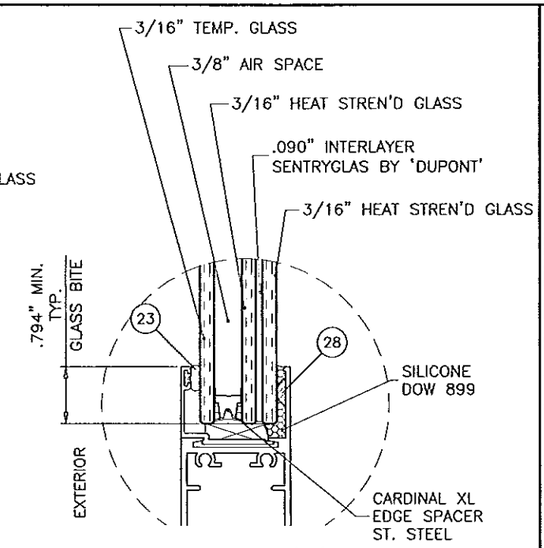

GLASS TYPE 'AI'
1" OVERALL INSUL. LAM. GLASS

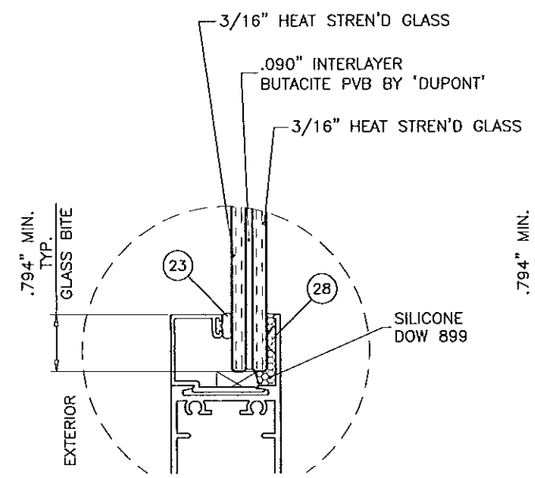

GLASS TYPE 'B'
7/16" OVERALL LAM. GLASS

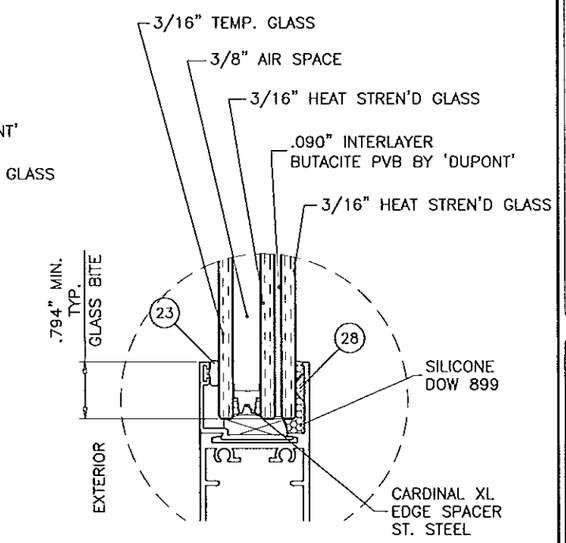

GLASS TYPE 'BI'
1" OVERALL INSUL. LAM. GLASS

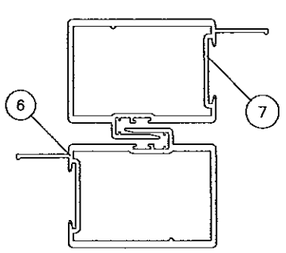

INTERLOCKS WITHOUT REINF.

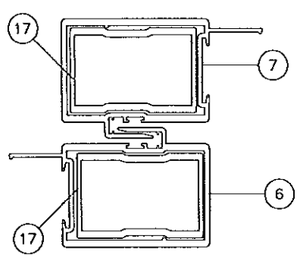

INTERLOCKS WITH REINF.

ALL EXTERIOR(+) LOADS SHOWN IN CHARTS ABOVE ARE FOR DOORS WITH 2–3/4" SILL HEIGHTS.
FOR 2" SILL HEIGHT LIMIT EXT.(+) LOADS TO 47.0 PSF
DOORS WITH 1–1/8" SILL HEIGHTS ARE NOT APPROVED FOR WATER INFILTRATION RESISTANCE
SEE SHEET 7 FOR DETAILS

GLAZING OPTIONS

NOTE:
SEE CHART #1 FOR DESIGN LOAD CAPACITY OF DESIRED GLASS SIZE AND REINFORCEMENT.
SEE CHART #2 FOR ANCHORS CAPACITY.
LOWER VALUES FROM GLASS OR ANCHOR CHART WILL APPLY TO ENTIRE SYSTEM.

$$\text{AVERAGE PANEL WIDTH (MAX. 4 PANEL OR LESS)} = \frac{\text{DOOR FRAME WIDTH}}{\text{NUMBER OF PANELS}}$$

NOTE:
GLASS CAPACITIES ON THIS SHEET ARE BASED ON ASTM E1300–09 (3 SEC. GUSTS) AND FLORIDA BUILDING COMMISSION DECLARATORY STATEMENT DCA05–DEC–219

Engr: JAVAD AHMAD
CIVIL
FLA. PE # 70592
C.A.N. 3538
MAR 10 2014

Approved as complying with the Florida Building Code
Date 3/20/14
NOA# 12-0912.02
Miami-Dade Product Control
By

AL-FAROOQ CORPORATION
ENGINEERS & PRODUCT DEVELOPMENT
1235 S.W. 87 AVE
MIAMI, FLORIDA 33174
TEL. (305) 264-8100 FAX. (305) 262-6973
COMP–ANL\W13–49ECO

SERIES–700 ALUM SLIDING GLASS DOOR (L.M.I.)

ECO WINDOW SYSTEMS, LLC.
9114 N.W. 106 STREET
MEDLEY, FL. 33178
TEL. (305) 885–5299

revisions:			
no	date	by	description
A	01.16.14		REV. PER RER COMMENTS

date: 09–27–13
scale: 1/2" = 1"
dr. by: HAMID
chk. by:

drawing no.
W13–49

1BY OR 2BY WOOD BUCKS AND METAL STRUCTURE NOT BY ECO WINDOWS MUST SUSTAIN LOADS IMPOSED BY GLAZING SYSTEM AND TRANSFER THEM TO THE BUILDING STRUCTURE.

TYPICAL ANCHORS: SEE ELEV. FOR SPACING

AT HEAD

TYPE 'A'– 1/4" DIA. ULTRACON BY 'ELCO' (Fu=177 KSI, Fy=155 KSI)
INTO 2BY WOOD BUCKS OR WOOD STRUCTURES
1–1/2" MIN. PENETRATION INTO WOOD

THRU 1BY BUCKS INTO CONCRETE
1–1/4" MIN. EMBED INTO CONCRETE

TYPE 'B'– 1/4" DIA. ULTRACON BY 'ELCO' (Fu=177 KSI, Fy=155 KSI)
DIRECTLY INTO CONCRETE
1–1/4" MIN. EMBED

TYPE 'C'– 1/4" DIA. SELF DRILLING SCREWS (GRADE 5 CRS)
INTO MIAMI–DADE COUNTY APPROVED MULLIONS (1/8" THK. MIN.)
INTO METAL STRUCTURES
STEEL : 1/8" THK. MIN. (Fy = 36 KSI MIN.)
ALUMINUM : 1/8" THK. MIN. (6063–T5 MIN.)
(STEEL IN CONTACT WITH ALUMINUM TO BE PLATED OR PAINTED)

AT SILL

TYPE 'B'– 1/4" DIA. ULTRACON BY 'ELCO' (Fu=177 KSI, Fy=155 KSI)
DIRECTLY INTO CONCRETE
1–1/4" MIN. EMBED

AT JAMBS

TYPE 'A'– 1/4" DIA. ULTRACON BY 'ELCO' (Fu=177 KSI, Fy=155 KSI)
INTO 2BY WOOD BUCKS OR WOOD STRUCTURES
1–1/2" MIN. PENETRATION INTO WOOD

THRU 1BY BUCKS INTO CONC. OR MASONRY
1–1/4" MIN. EMBED INTO CONC. OR MASONRY

TYPE 'B'– 1/4" DIA. ULTRACON BY 'ELCO' (Fu=177 KSI, Fy=155 KSI)
DIRECTLY INTO CONC. OR MASONRY
1–1/4" MIN. EMBED INTO CONC. OR MASONRY

TYPE 'C'– 1/4" DIA. SELF DRILLING SCREWS (GRADE 5 CRS)
INTO MIAMI–DADE COUNTY APPROVED MULLIONS (1/8" THK. MIN.)
INTO METAL STRUCTURES
STEEL : 1/8" THK. MIN. (Fy = 36 KSI MIN.)
ALUMINUM : 1/8" THK. MIN. (6063–T5 MIN.)
(STEEL IN CONTACT WITH ALUMINUM TO BE PLATED OR PAINTED)

ANCHOR EDGE DISTANCES

INTO CONCRETE = 2–1/2" MIN.
INTO WOOD STRUCTURE = 1" MIN.
INTO METAL STRUCTURE = 3/4" MIN.

CONCRETE AT HEAD, SILL OR JAMBS f'c = 3000 PSI MIN.
C–90 HOLLOW/FILLED BLOCK AT JAMBS f'm = 2000 PSI MIN.

Approved as complying with the Florida Building Code
Date 3/20/14
NOA# 13-0912.02
Miami Dade Product Control
By

Engr: JAVAD AHMAD
CIVIL
FLA. PE # 70592
C.A.N. 3538

AL-FAROOQ CORPORATION
ENGINEERS & PROJECT DEVELOPMENT
1235 S.W. 87 AVE
MIAMI, FLORIDA 33174
TEL. (305) 264-8100 FAX. (305) 262-6978

COMP–ANL\W13–49ECO

SERIES–700 ALUM SLIDING GLASS DOOR (L.M.I.)

ECO WINDOW SYSTEMS, LLC.
9114 N.W. 106 STREET
MEDLEY, FL. 33178
TEL. (305) 885–5299

revisions:

no	date	by	description
A	01.16.14	REV. PER RER COMMENTS	

date: 09–27–13
scale: 1/2" = 1"
dr. by: HAMID
chk. by:

drawing no.
W13–49

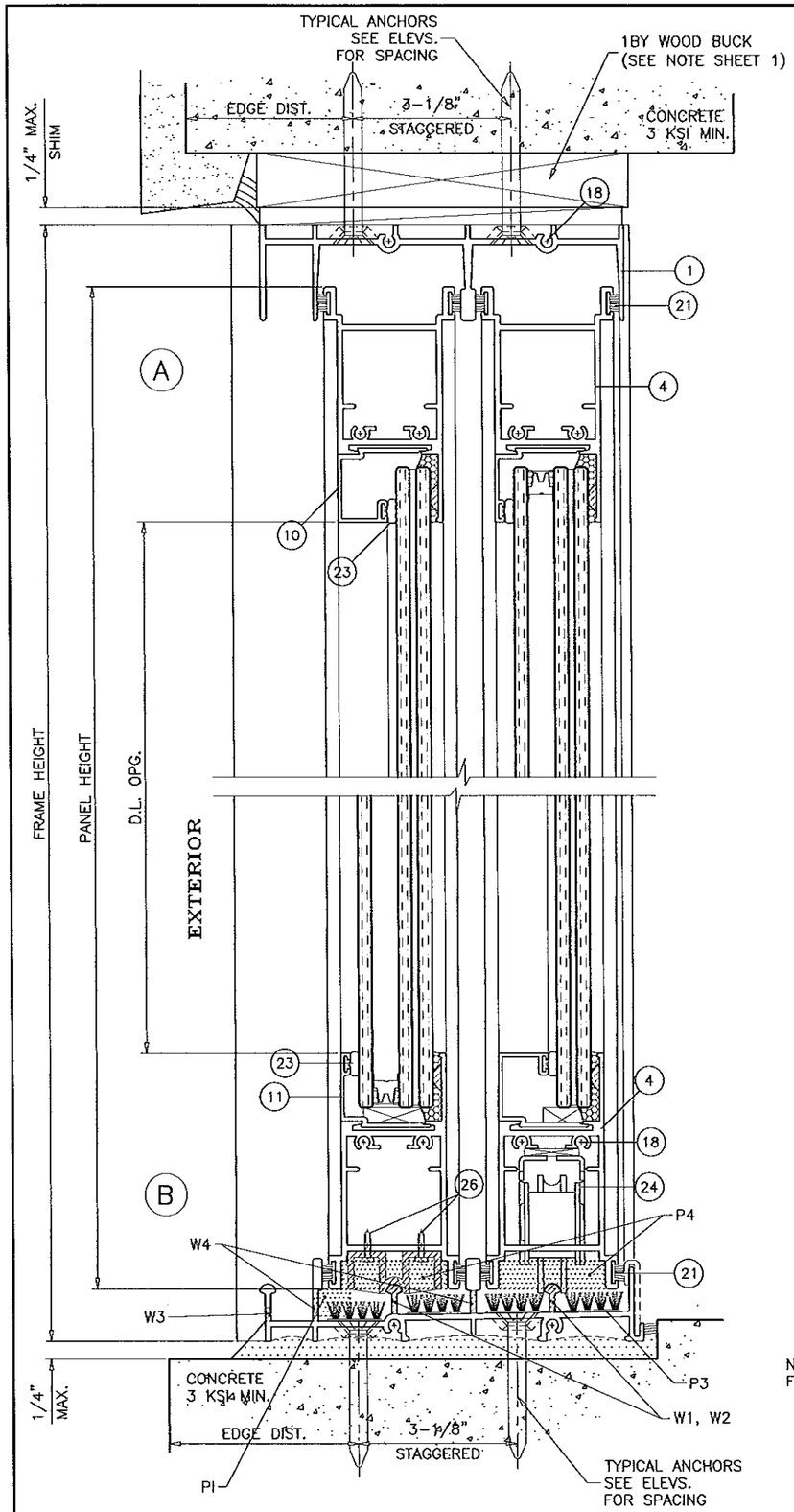

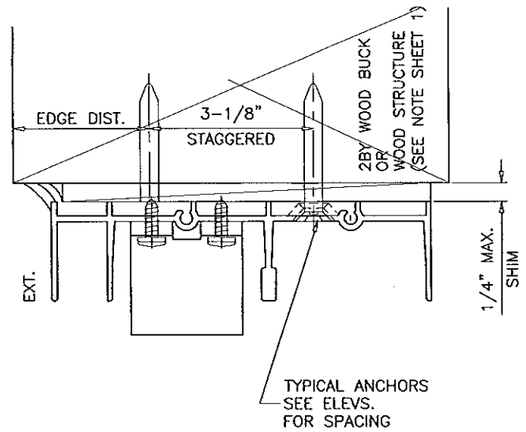

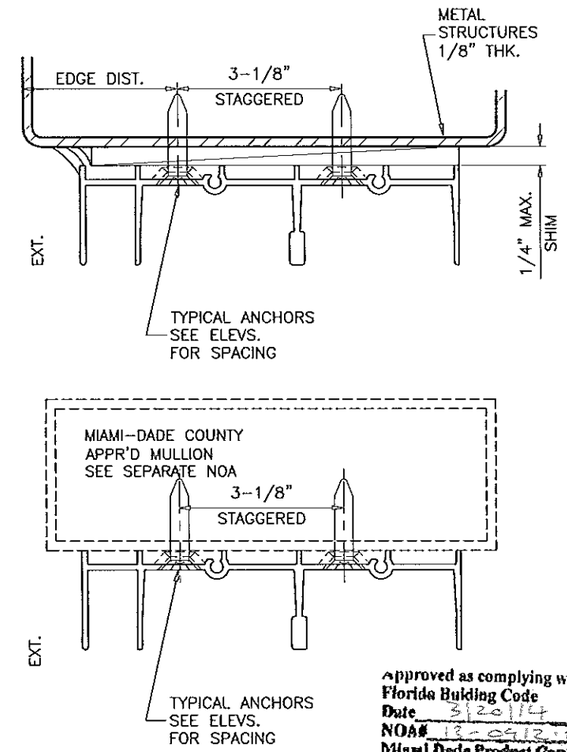

Approved as complying with the Florida Building Code
Date 3/20/14
NOA# 13-0912.02
Miami Dade Product Control
By [signature]

WEEPHOLES:

W1 = 1-1/2" LONG NOTCH AT EACH END.

W2 = 3/16" X 3/4" LONG WEEP NOTCH AT 22" FROM ENDS AND 36" O.C.

W3 = 3/16" X 1" LONG WEEP NOTCH AT 5" FROM ENDS AND 36" O.C.

W4 = 1/4" X 1" LONG WEEP NOTCH AT 5" FROM ENDS AND 36" O.C.

PILE PADS:

P1 = OPEN CELL FOAM AT EACH WEEP HOLE LOCATION 1-1/16" LONG X 7/16" WIDE X 7/16" HIGH

P2 = SELF ADHESIVE PILE PAD 1" X 3/8" X 1/4" HIGH

P3 = SELF ADHESIVE PILE PAD WITH MULTI INTEGRAL FIN 2-1/2" X 1" X 3/8" HIGH

P4 = OPEN CELL FOAM AT INTERLOCK & ASTRAGAL 2" LONG X 1-7/16" WIDE X 7/16" HIGH

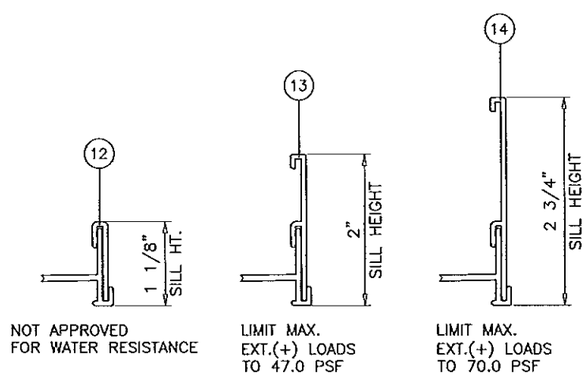

NOT APPROVED FOR WATER RESISTANCE

LIMIT MAX. EXT.(+) LOADS TO 47.0 PSF

LIMIT MAX. EXT.(+) LOADS TO 70.0 PSF

SILL HEIGHT VS WATER RESISTANCE EXT.(+) LOAD

SEE CHART 1 FOR DOOR CAPACITY

Engr: JAVAD AHMAD
CIVIL
FLA. PE # 70592
C.A.N. 3538

AL-FAROOQ CORPORATION
ENGINEERS & PRODUCT DEVELOPMENT
1235 S.W. 87 AVE
MIAMI, FLORIDA 33174
TEL. (305) 264-8100 FAX. (305) 262-6978
COMP-ANL\W13-49ECO

SERIES-700 ALUM SLIDING GLASS DOOR (L.M.I.)

ECO WINDOW SYSTEMS, LLC.
9114 N.W. 106 STREET
MEDLEY, FL. 33178
TEL. (305) 885-5299

revisions:

no	date	by	description
A	01.16.14		REV. PER RER COMMENTS

date: 09-27-13
scale: 1/2" = 1"
dr. by: HAMID
chk. by:

drawing no. W13-49

sheet 7 of 12

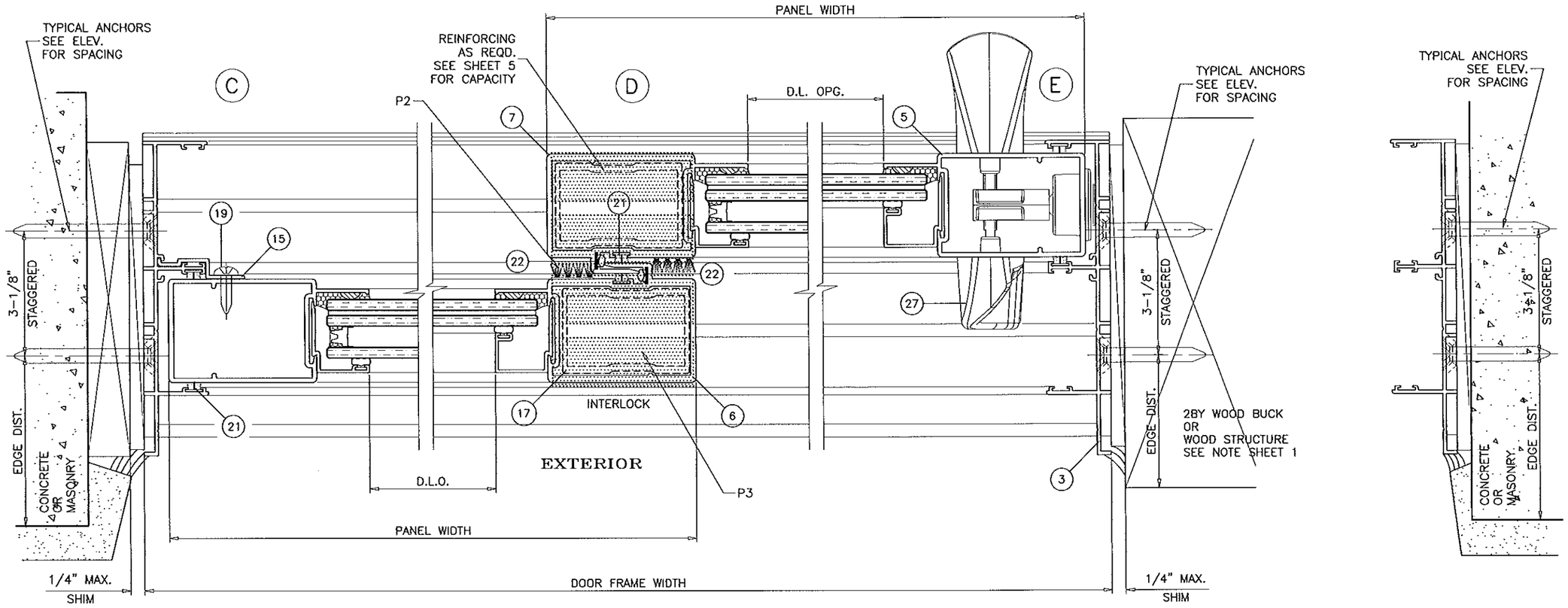

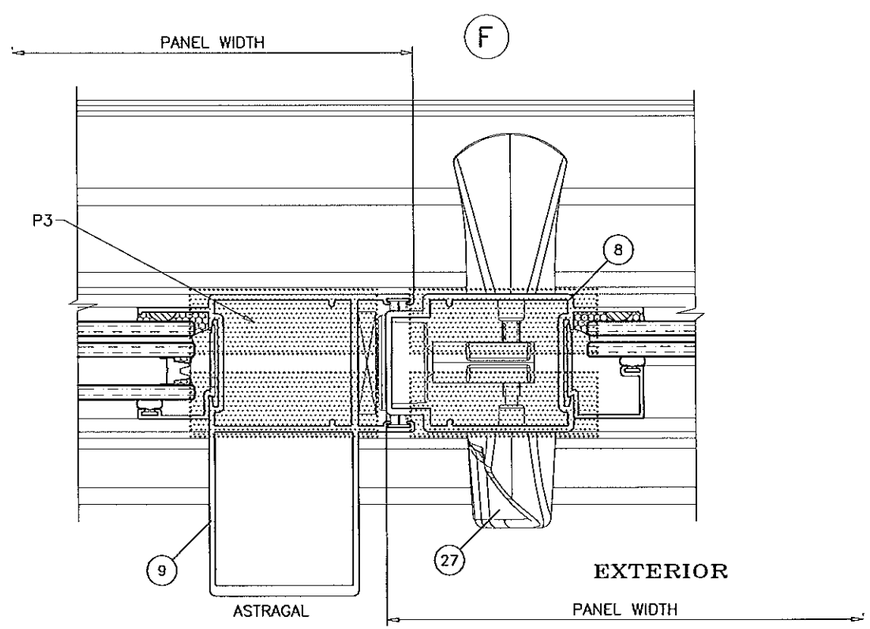

Approved as complying with the
Florida Building Code
Date 3/26/14
NOA# 13-0912.02
Miami Dade Product Control
By

Engr: JAVAD AHMAD
CIVIL
FLA. PE # 70592
C.A.N. 3538

MAR 2014

AL-FAROOQ CORPORATION
ENGINEERS & PRODUCT DEVELOPMENT
1235 S.W. 87 AVE
MIAMI, FLORIDA 33174
TEL. (305) 264-8100 FAX. (305) 262-6978
COMP-ANL\W13-49ECO

SERIES-700 ALUM SLIDING GLASS DOOR (L.M.I.)

ECO WINDOW SYSTEMS, LLC.
9114 N.W. 106 STREET
MEDLEY, FL. 33178
TEL. (305) 885-5299

revisions:

no	date	by	description
A	01.16.14		REV. PER RER COMMENTS

date: 09-27-13
scale: 1/2" = 1"
dr. by: HAMID
chk. by:

drawing no.
W13-49

sheet 8 of 12

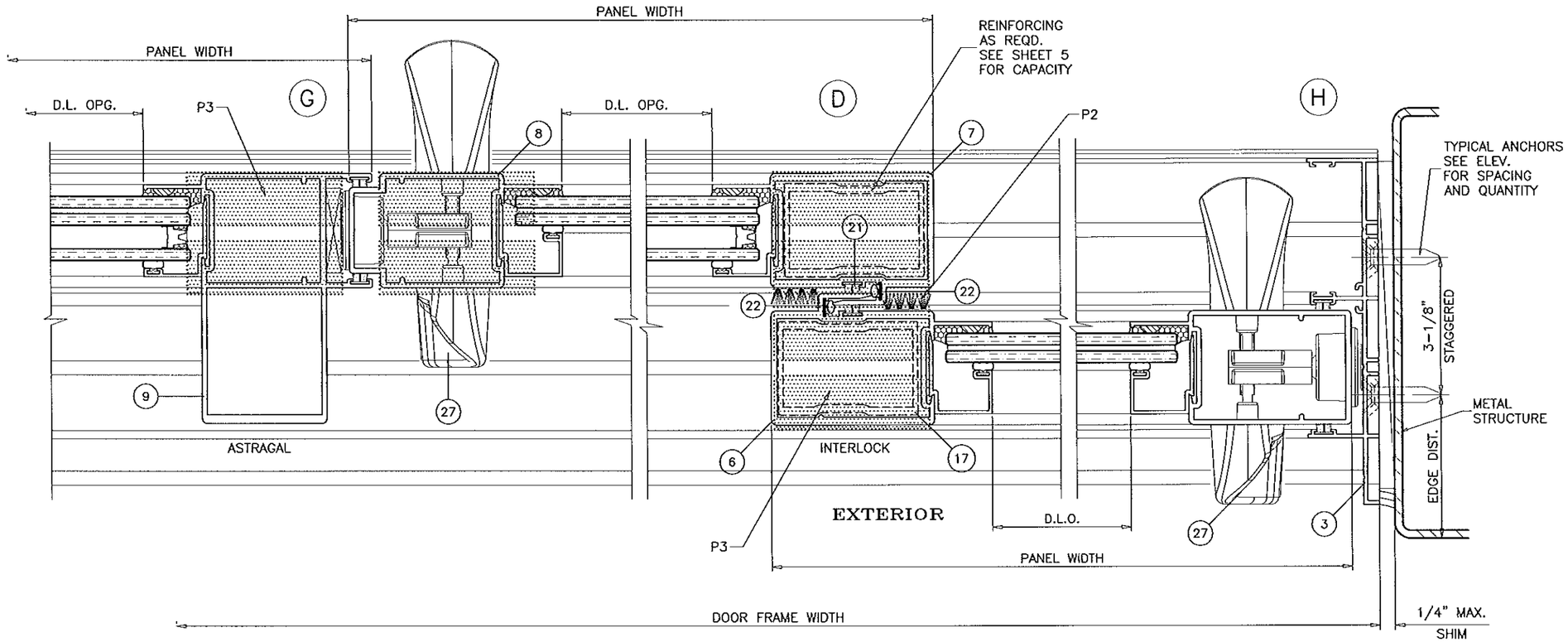

Approved as complying with the
Florida Buiding Code
Date 3/20/14
NOA# 12-0912.03
Miami Dade Product Control
By

Engr: JAVAD AHMAD
CIVIL
FLA. PE # 70592
C.A.N. 3538

MAR 20 2014

AL-FAROOQ CORPORATION
ENGINEERS & PRODUCT DEVELOPMENT
1235 S.W. 87 AVE
MIAMI, FLORIDA 33174
TEL. (305) 264-8100 FAX. (305) 262-6978

COMP-ANL\W13-49ECO

SERIES-700 ALUM SLIDING GLASS DOOR (L.M.I.)

ECO WINDOW SYSTEMS, LLC.
9114 N.W. 106 STREET
MEDLEY, FL. 33178
TEL. (305) 885-5299

revisions:

no	date	by	description
A	01.16.14		REV. PER RER COMMENTS

date: 09-27-13
scale: 1/2" = 1"
dr. by: HAMID
chk. by:

drawing no.
W13-49

sheet 9 of 12

ITEM #	PART #	QUANTITY	DESCRIPTION	MATERIAL	MANF./SUPPLIER/REMARKS
1	E701	1	FRAME HEAD	6005-T5	–
2	E702	1	FRAME SILL	6005-T5	–
3	E703	2	FRAME JAMB	6063-T6	–
4	E704	2/ PANEL	PANEL TOP AND BOTTOM RAIL	6063-T6	–
5	E705	AS RQD.	PANEL LOCK STILE	6063-T6	–
6	E706	AS REQD.	PANEL OUTER INTERLOCK	6063-T6	–
7	E707	AS REQD.	PANEL INNER INTERLOCK	6063-T6	–
8	E708	AS REQD.	PANEL MALE ASTRAGAL	6063-T6	–
9	E709	AS REQD.	PANEL FEMALE ASTRAGAL	6063-T6	–
10	E710	AS REQD.	GLAZING BEAD 7/16" LAMI GLASS	6063-T6	–
11	E711	AS REQD.	GLAZING BEAD 1" INSULATED GLASS	6063-T6	–
12	E712	AS REQD.	SILL TRIM	6063-T6	OPTIONAL
13	E713	AS REQD.	2" SILL RISER	6063-T6	–
14	E714	AS REQD.	2-3/4" SILL RISER	6063-T6	–
15	E715	AS REQD.	FIXED PANEL CLIP	6063-T6	–
17	E717	AS REQD.	INTERLOCK STIFFENER (FULL PANEL LENGTH)	6063-T6	–
18	#10 X 3/4" HWH SMS	AS REQD.	FRAME ASSY. SCREWS	ST. STEEL	–
18A	#10 X 1" FH SMS	AS REQD.	PANEL ASSY. SCREWS	ST. STEEL	–
19	#8 X 1/2" PH SMS	2/CLIP	FIXED PANEL CLIP SCREWS	ST. STEEL	AT 3" FROM ENDS & 16" O.C.
20	#10 X 1-1/4" PH SMS	1/ ROLLER	ROLLER INST. SCREWS	–	NOT SHOWN
21	WEATHERSTRIP	AS REQD.	FRAME AND PANEL WEATHERSTRIP	–	FIN SEAL .190 HIGH BY ULTRAFAB
22	E235	AS REQD.	INTERLOCK BUMPER BULB	SANTOPRENE	ULTRAFAB
23	E203	AS REQD.	GLAZING BEAD BULB	SANTOPRENE	ULTRAFAB, DUROMETER 65±5
24	PR03-6005	2/ MOV. PANEL	ROLLER ASSEMBLY	–	INTERLOCK (1/2" MTG. SPACER REQD.)
25	E718	2/PANEL	FIXED PANEL SKATE	DELRIN	–
26	#8 X 1/2" PH SMS	2/CLIP	FIXED PANEL SKATE INST. SCREWS	ST. STEEL	
27	–	AS REQD.	3 PLY DUAL POINT LOCK ASSEMBLY	–	BY INTERLOCK
28		AS REQD.	BUMPON (SILICONE SPACER)	SILICONE	BY FRANK LOWE

SEALANT:

ALL JOINTS AND FRAME CONNECTIONS SEALED WITH WHITE/ALUMINUM COLORED SILICONE.

Approved as complying with the Florida Building Code
Date 3/20/2014
NOA# 13-0912.02
Miami Dade Product Control
By

Engr: JAVAD AHMAD
CIVIL
FLA. PE # 70592
C.A.N. 3538

AL-FAROOQ CORPORATION
ENGINEERS & PRODUCT DEVELOPMENT
1235 S.W. 87 AVE
MIAMI, FLORIDA 33174
TEL. (305) 264-8100 FAX. (305) 262-6978

COMP-ANL\W13-49ECO

SERIES-700 ALUM SLIDING GLASS DOOR (L.M.I.)

ECO WINDOW SYSTEMS, LLC.
9114 N.W. 106 STREET
MEDLEY, FL. 33178
TEL. (305) 885-5299

revisions:

no	date	by	description
A	01.16.14		REV. PER RER COMMENTS

date: 09-27-13
scale: 1/2" = 1"
dr. by: HAMID
chk. by:

drawing no.
W13-49

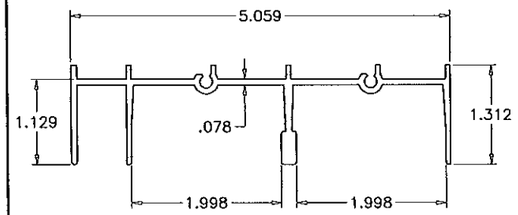

1 FRAME HEAD

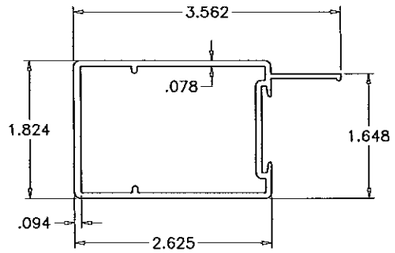

5 PANEL LOCK STILE

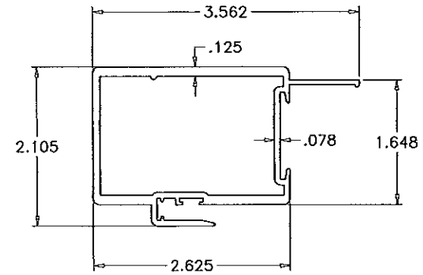

7 PANEL INNER INTERLOCK

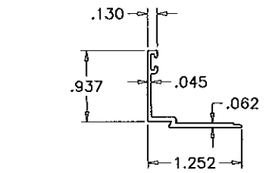

10 GLAZING BEAD
1" INSUL. LAM. GLASS

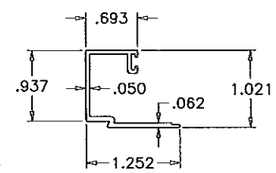

11 GLAZING BEAD
7/16" LAM. GLASS

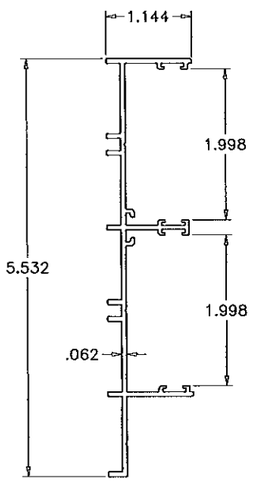

3 FRAME JAMB

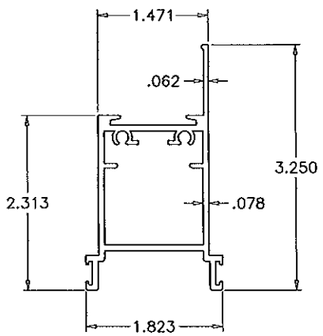

4 PANEL TOP & BOTTOM RAIL

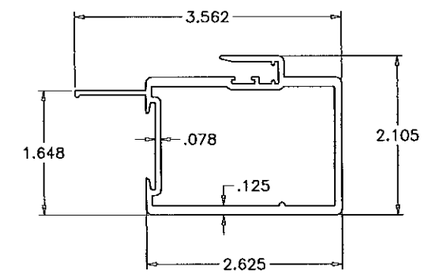

6 PANEL OUTER INTERLOCK

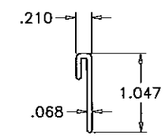

12 SILL TRIM

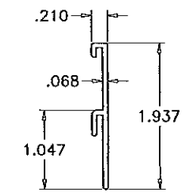

13 2" SILL RISER

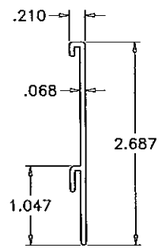

14 2-3/4" SILL RISER

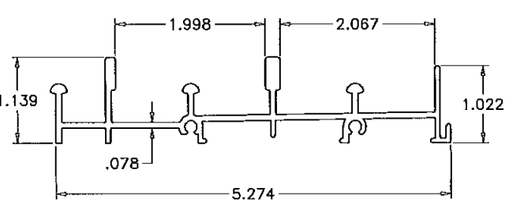

2 FRAME SILL

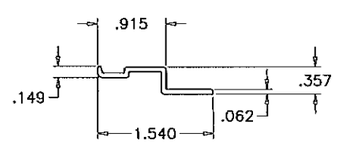

15 FIX. PANEL CLIP

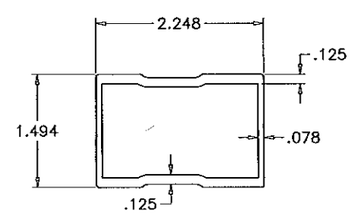

17 INTERLOCK STIFFENER

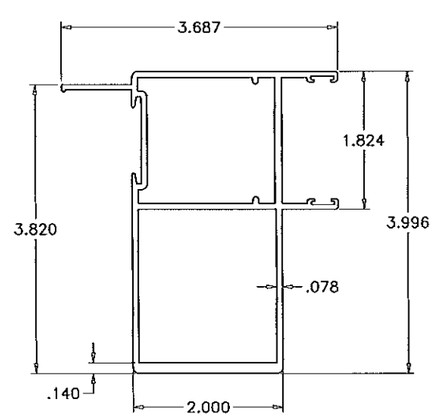

9 PANEL FEMALE ASTRAGAL

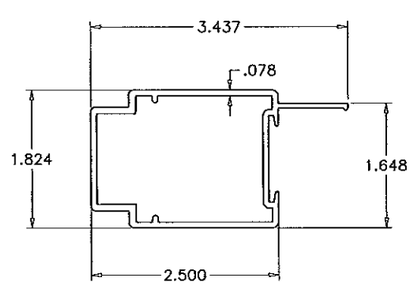

8 PANEL MALE ASTRAGAL

Approved as complying with the
Florida Building Code
Date 3/20/14
NOA# 13-[illegible]
Miami Dade Product Control
By [illegible]

Engr: JAVAD AHMAD
CIVIL
FLA. PE # 70592
C.A.N. 3538

AL-FAROOQ CORPORATION
ENGINEERS & PRODUCT DEVELOPMENT
1235 S.W. 87 AVE
MIAMI, FLORIDA 33174
TEL. (305) 264-8100 FAX. (305) 262-6978

COMP-ANL\W13-49ECO

SERIES-700 ALUM SLIDING GLASS DOOR (L.M.I.)

ECO WINDOW SYSTEMS, LLC.
9114 N.W. 106 STREET
MEDLEY, FL. 33178
TEL. (305) 885-5299

revisions:

no	date	by	description
A	01.16.14		REV. PER RER COMMENTS

date: 09-27-13
scale: 1/2" = 1"
dr. by: HAMID
chk. by:

drawing no.
W13-49

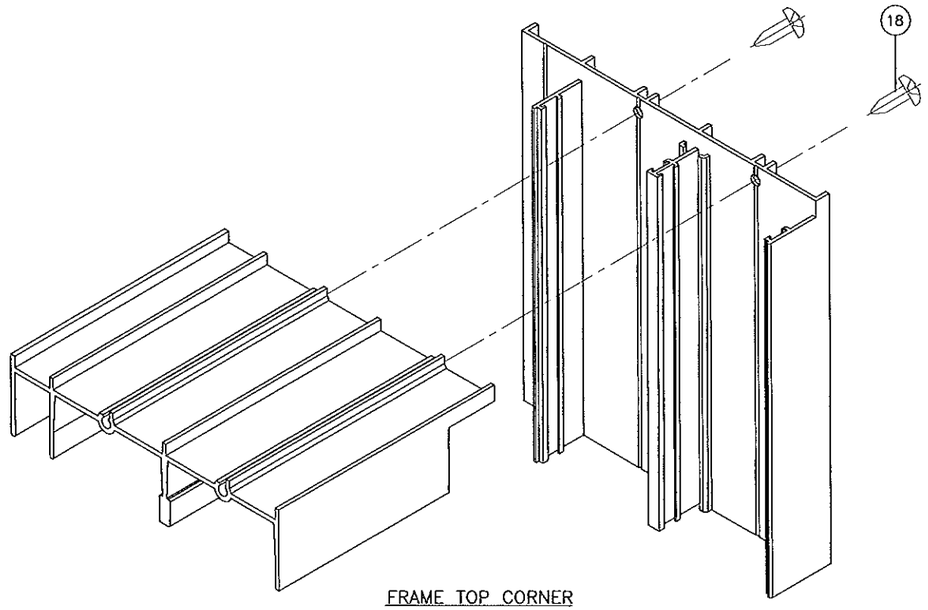

FRAME TOP CORNER

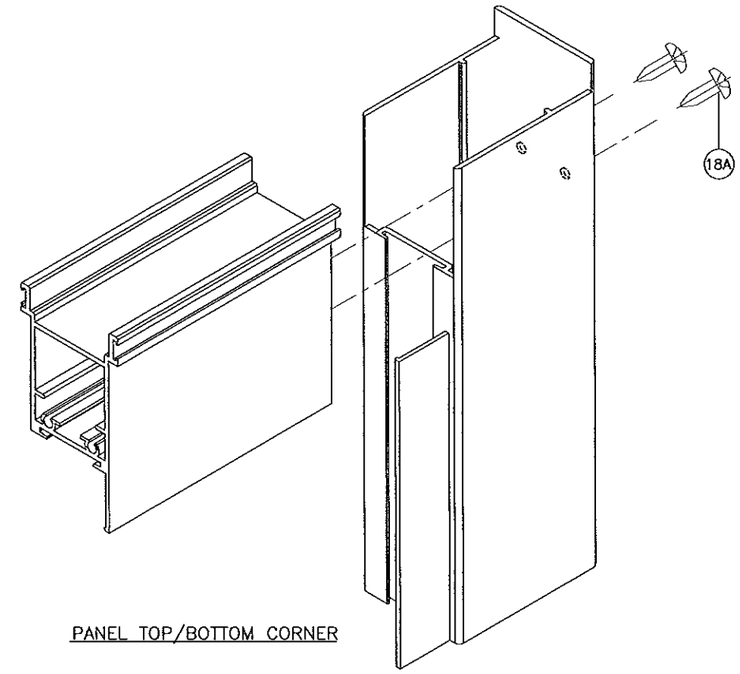

PANEL TOP/BOTTOM CORNER

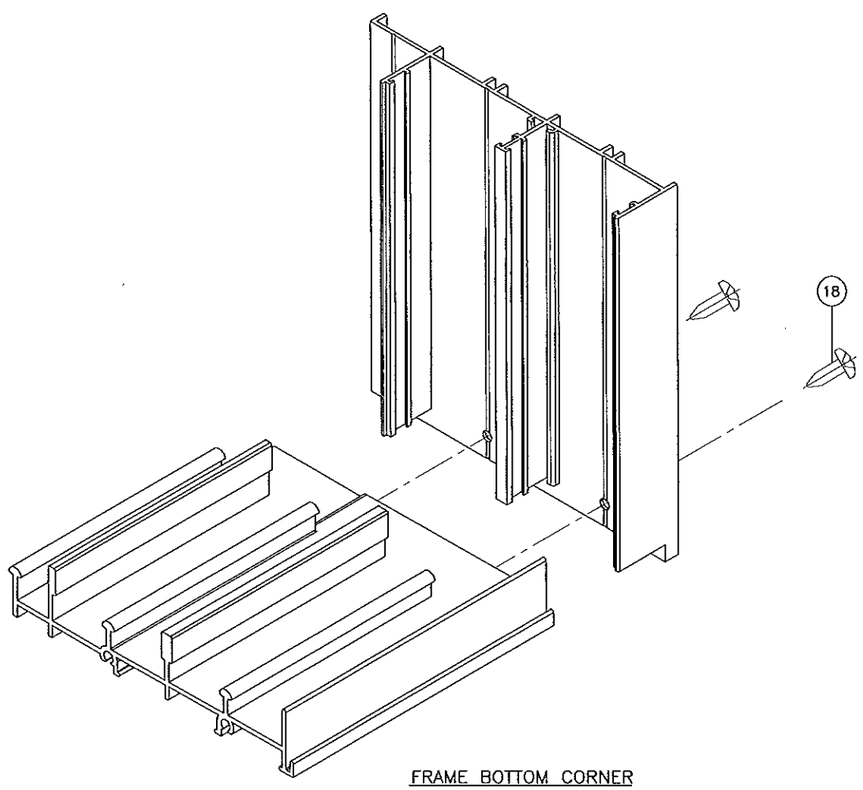

FRAME BOTTOM CORNER

Approved as complying with the
Florida Building Code
Date MAR 20, 2014
NOA# 13-0919.02
Miami-Dade Product Control
By

Engr: JAVAD AHMAD
CIVIL
FLA. PE # 70592
C.A.N. 3538

MAR 20 2014

AL-FAROOQ CORPORATION
ENGINEERS & PRODUCT DEVELOPMENT
1235 S.W. 87 AVE
MIAMI, FLORIDA 33174
TEL. (305) 264-8100 FAX. (305) 262-6978

COMP-AINL\W13-49ECO

SERIES-700 ALUM SLIDING GLASS DOOR (L.M.I.)

ECO WINDOW SYSTEMS, LLC.
9114 N.W. 106 STREET
MEDLEY, FL. 33178
TEL. (305) 885-5299

revisions:

no	date	by	description
A	01.16.14		NO CHANGE THIS SHEET

date: 09-27-13
scale: 1/2" = 1"
dr. by: HAMID
chk. by:

drawing no.
W13-49

sheet 12 of 12