MIAMI-DADE COUNTY
PRODUCT CONTROL SECTION
11805 SW 26 Street, Room 208
Miami, Florida 33175-2474
T (786) 315-2590 F (786) 315-2599
www.miamidade.gov/economy

DEPARTMENT OF REGULATORY AND ECONOMIC RESOURCES (RER)
BOARD AND CODE ADMINISTRATION DIVISION

NOTICE OF ACCEPTANCE (NOA)

Alpine Overhead Doors, Inc.
8 Hulse Road
East Setauket, NY 11733

SCOPE:

This NOA is being issued under the applicable rules and regulations governing the use of construction materials. The documentation submitted has been reviewed and accepted by Miami-Dade County RER-Product Control Section to be used in Miami Dade County and other areas where allowed by the Authority Having Jurisdiction (AHJ).

This NOA shall not be valid after the expiration date stated below. The Miami-Dade County Product Control Section (In Miami Dade County) and/or the AHJ (in areas other than Miami Dade County) reserve the right to have this product or material tested for quality assurance purposes. If this product or material fails to perform in the accepted manner, the manufacturer will incur the expense of such testing and the AHJ may immediately revoke, modify, or suspend the use of such product or material within their jurisdiction. RER reserves the right to revoke this acceptance, if it is determined by Miami-Dade County Product Control Section that this product or material fails to meet the requirements of the applicable building code.

This product is approved as described herein, and has been designed to comply with the Florida Building Code, including the High Velocity Hurricane Zone.

DESCRIPTION: Redi- Storm 16 Steel Rolling Door up to 16'-0" Wide

APPROVAL DOCUMENT: Drawing No. **ALP16**, titled "Redi-Storm 16", sheets 1, 2 and 3, dated 12/12/2008, with revision 1 dated 08/08/2013, prepared by Alpine Overhead Doors, Inc., signed and sealed Felice P. DeGiovanni, P.E., bearing the Miami-Dade County Product Control renewal stamp with the Notice of Acceptance number and expiration date by the Miami-Dade County Product Control Section.

MISSILE IMPACT RATING: Large and Small Missile Impact Resistant

LABELING: A permanent label with the manufacturer's name or logo, manufacturing address, model number, the positive and negative design pressure rating, indicate impact rated if applicable, installation instruction drawing reference number, approval number (NOA), the applicable test standards, and the statement reading 'Miami-Dade County Product Control Approved' is to be located on the door's side track, bottom angle, or inner surface of a panel.

LIMITATION: Roll-up mechanism is not part of this approval.

RENEWAL of this NOA shall be considered after a renewal application has been filed and there has been no change in the applicable building code negatively affecting the performance of this product.

TERMINATION of this NOA will occur after the expiration date or if there has been a revision or change in the materials, use, and/or manufacture of the product or process. Misuse of this NOA as an endorsement of any product, for sales, advertising or any other purposes shall automatically terminate this NOA. Failure to comply with any section of this NOA shall be cause for termination and removal of NOA.

ADVERTISEMENT: The NOA number preceded by the words Miami-Dade County, Florida, and followed by the expiration date may be displayed in advertising literature. If any portion of the NOA is displayed, then it shall be done in its entirety.

INSPECTION: A copy of this entire NOA shall be provided to the user by the manufacturer or its distributors and shall be available for inspection at the job site at the request of the Building Official.

This NOA **renews NOA # 08-0805.15** and consists of this page 1 and evidence page E-1, as well as approval document mentioned above.

The submitted documentation was reviewed by **Carlos M. Utrera, P.E.**

MIAMI-DADE COUNTY APPROVED

12/18/2013

NOTICE OF ACCEPTANCE: EVIDENCE SUBMITTED

A. DRAWINGS

1. Drawing No. **ALP16**, titled "Redi-Storm 16", sheets 1, 2 and 3, dated 12/12/2008, with revision 1 dated 08/08/2013, prepared by Alpine Overhead Doors, Inc., signed and sealed Felice P. DeGiovanni, P.E.

B. TESTS *"Submitted under NOA # 08-0805.15"*

1. Test report on Uniform Static Air Pressure per FBC, TAS 202, Large Missile Impact Test per FBC, TAS 201 and Cyclic Wind Pressure Test per FBC, TAS 203 of a Redi-Storm 16 Roll up Door, prepared by ETC Laboratories, Test Report No. **ETC-07-1102-20195.0**, dated 05/29/2008, signed and sealed by Joseph L. Doldan, P.E.

C. CALCULATIONS *"Submitted under NOA # 08-0805.15"*

1. Structural analysis and anchor verification calculations prepared by Alpine Overhead Doors, Inc., dated 06/09/2008, signed and sealed by Felice P. DeGiovanni P.E.

D. QUALITY ASSURANCE

1. Miami-Dade Department of Regulatory and Economic Resources (RER)

E. MATERIAL CERTIFICATIONS *"Submitted under NOA # 08-0805.15"*

1. Test Report on Tensile Test per ASTM E8, prepared by ETC Laboratories, Test Report No. **ETC-08-1102-21835**, dated 10/08/2008, signed and sealed by Joseph L. Doldan, P.E.

F. STATEMENTS

1. Statement letter of code conformance to 2010 FBC and no financial interest, issued by F. Paul DeGiovanni, P.E., Consulting Engineer, dated 08/31/2013, signed and sealed by Felice P. DeGiovanni, P.E.
2. Test contract letter dated 12/13/2013.

   "Submitted under NOA # 08-0805.15"

3. Statement letter of test compliance, by ETC Laboratories, dated 10/30/2008, signed and sealed by Joseph L. Doldan, P.E.

12/18/2013

Carlos M. Utrera, P.E.
Product Control Examiner
NOA No. 13-0916.06
Expiration Date: December 11, 2014
Approval Date: December 26, 2013

PROJECT
PROJECT

CONTRACT# / P.O.#
Computer Generated Drawing

FILE NAME:
M:\Dwg\Redistorm\OtherInformation\16\ALP16-1.dwg

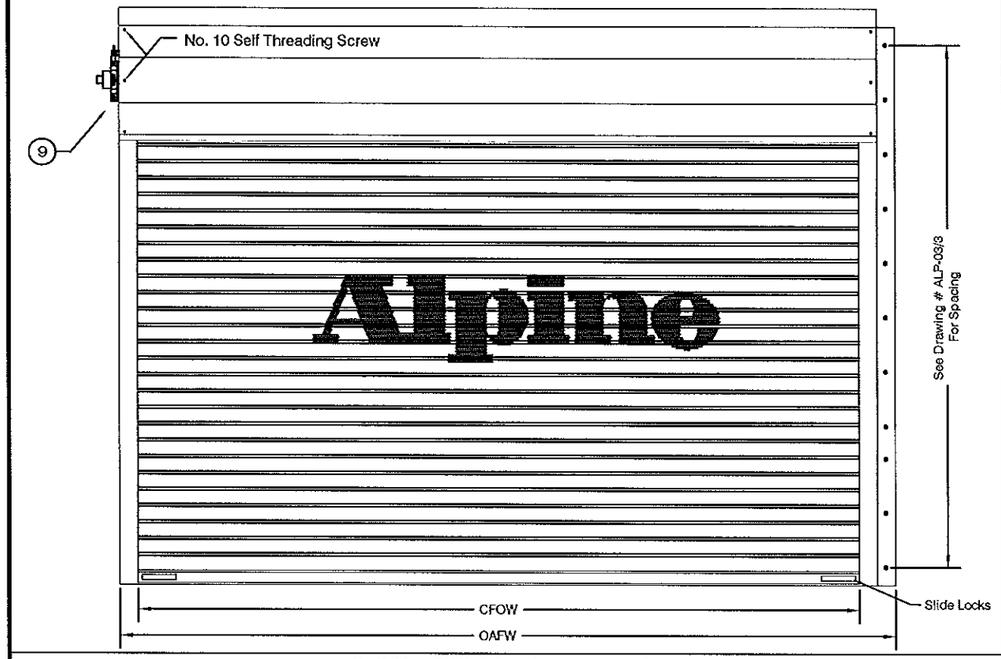

COIL SIDE ELEVATION

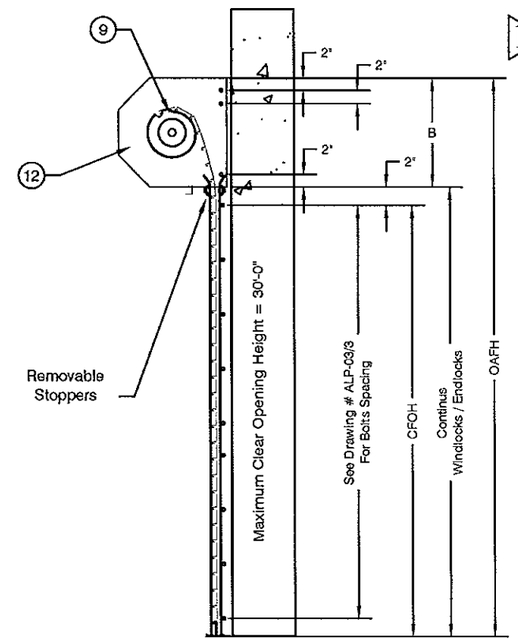

VERTICAL SECTION

QTY	MK	CLEAR FRAME OPENING		OVERALL FRAME		FRAME OPENING		B	G	GD	OPER-ATION	DRIVE
		C F O WIDTH	C F O HEIGHT	O A F WIDTH	O A F HEIGHT	F O W IDTH	F O H EIGHT	BRACKET	GUIDE	GUIDE DEPTH		
1		16'-0"	10'-0"	16'-6 3/4"	11'-6"	16'-0"	10'-0"	16"	3"	4 1/2"	Manual	
				(E Mount)								

NOTES:

01. This Roll-Up Door system was designed in accordance with the latest edition of the Florida Building Code as a large missle impact resistant system.
02. Calculations on Positive (+) and Negative (-) design pressure are performed in accordance with ASCE 7-10 (minimum design loads for Buildings and other Structures).
03. The details and specifications shown herein represent the products tested for UNIFORM STATIC AIR PRESSURE in conformance with DADE COUNTY Protocols TAS 201, 202 & 203.
    Positive (+) Design Load = 60 PSF
    Negative (-) Design Load = 60 PSF
    DESIGN PRESSURE RATING + / - 60 PSF
04. SLATS to be ASTM A653 Grade C with G-90 Galvanizing or Stainless Steel with Minimum Fy = 40 KSI
05. All STEEL ANGLES and WIND BAR to be Shop Primed.
06. WIND LOCKS to be Ductile IRON with Minimum Fy = 42 KSI.
07. All Assembly Bolts to be ASTM - A449 / SAE Grade 5 Or STAINLESS STEEL-304 Threads are Included in the SHEAR Plane.
08. All WELDING to be in Accordance with AWS Latest Edition of the Florida Building Code. Welding to be done by Welders Using 70xx Electrodes.
09. SPRING Counterbalance to be Housed in a STEEL PIPE of Diameter and WALL Thickness to Restrict Maximum Deflection of Diameter and WALL Thickness to Restrict maximum Deflection of 0.03" Per Foot of Door Width. Roll-on Mechanism not part of this approval must be certified by an independent certifying agent.
10. RIVETS for WIND LOCKS / END LOCKS are to be semi-Tubular 0.246/0.252 DIA 0.437 Mushroom head x 7/16", ASTM A-31.
11. DOOR is to be 22 Gauge ASTM - 525.
12. BRACKETS are STEEL Plates not Less than 3/16" Thick. BALL BEARING at Rotating support points. Bolted to mounting Angle, Supports Counterbalance Assembly and Forms end Enclosures sized to conform.

United States Patent Numbers: 5,657,805 - 5,419,386

DATE	NO.	REVISION RECORD	DRAWN	CHECK
8/8/13	1	Changed reference to 2007 Code to current code.		

REDI-STORM™
HURRICANE PROTECTION DEVICE
APPROVED MEANS OF EGRESS

MATERIAL

CURTAIN: 22 gage galvanized steel sheet roll formed 2 3/4" flat slat sections
FINISH: Standard

HOOD: 24 gage galvanized steel sheet roll formed 2 3/4" flat slat sections
FINISH: Standard

GUIDES: Designed using A-36 structural steel angles, 1/2" sq. stock for windbar
FINISH: Standard

BOTTOM BAR: Two MATERIAL angles which extends into guides. equipped with vinyl weather-stripping
FINISH: Standard

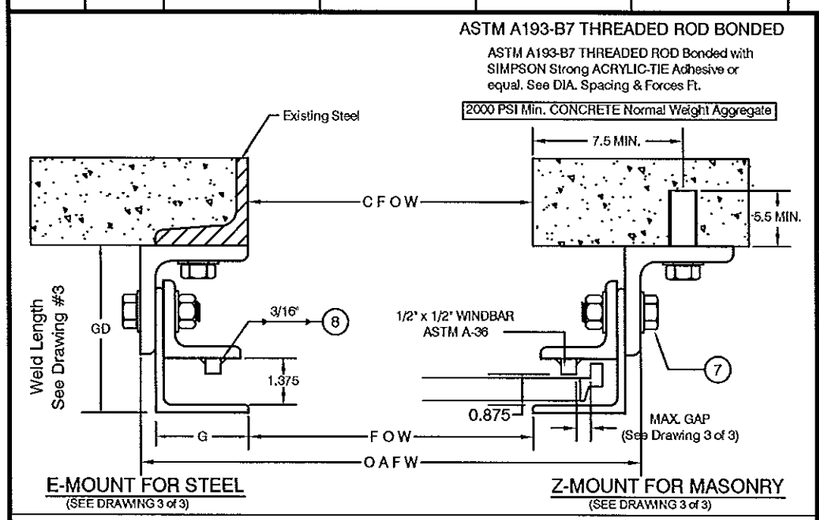

GUIDE SECTION

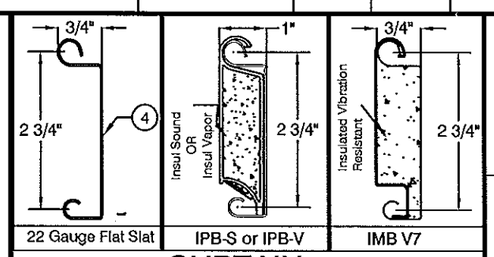

CURTAIN

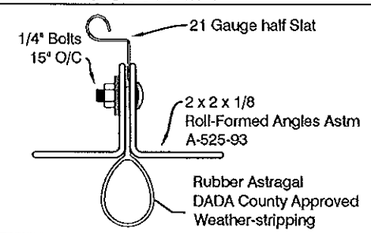

BOTTOM BAR

REDI-STORM 16

F.P. DEGIOVANNI P.E.
41 FLANDERS RD.
MOUNTAUK, N.Y. 11954
FL. LICENSE NO. 55071

SHEET: 1 of 3
DRAWN BY
APPR. BY
DATE 12/12/08
DRAWING # ALP16-1
REV. 1

F.P. DEGIOVANNI CERTIFICATE No 55071 STATE OF FLORIDA PROFESSIONAL ENGINEER

FOR DADE COUNTY USE ONLY
PRODUCT RENEWED
as complying with the Florida Building Code
Acceptance No 13-0916.06
Expiration Date 12/11/2014
By
Miami Dade Product Control

Alpine® OVERHEAD DOORS, INC.
8 HULSE RD. E. SETAUKET, N.Y. 11733
TEL: (631)473-9300 FAX: (631)642-0800

© COPYRIGHT 2008

PROJECT
PROJECT

CONTRACT# / P.O.#
Computer Generated Drawing

FILE NAME:
M:\Dwg\OtherInformation\Redistorm\16\ALP16-2.dwg

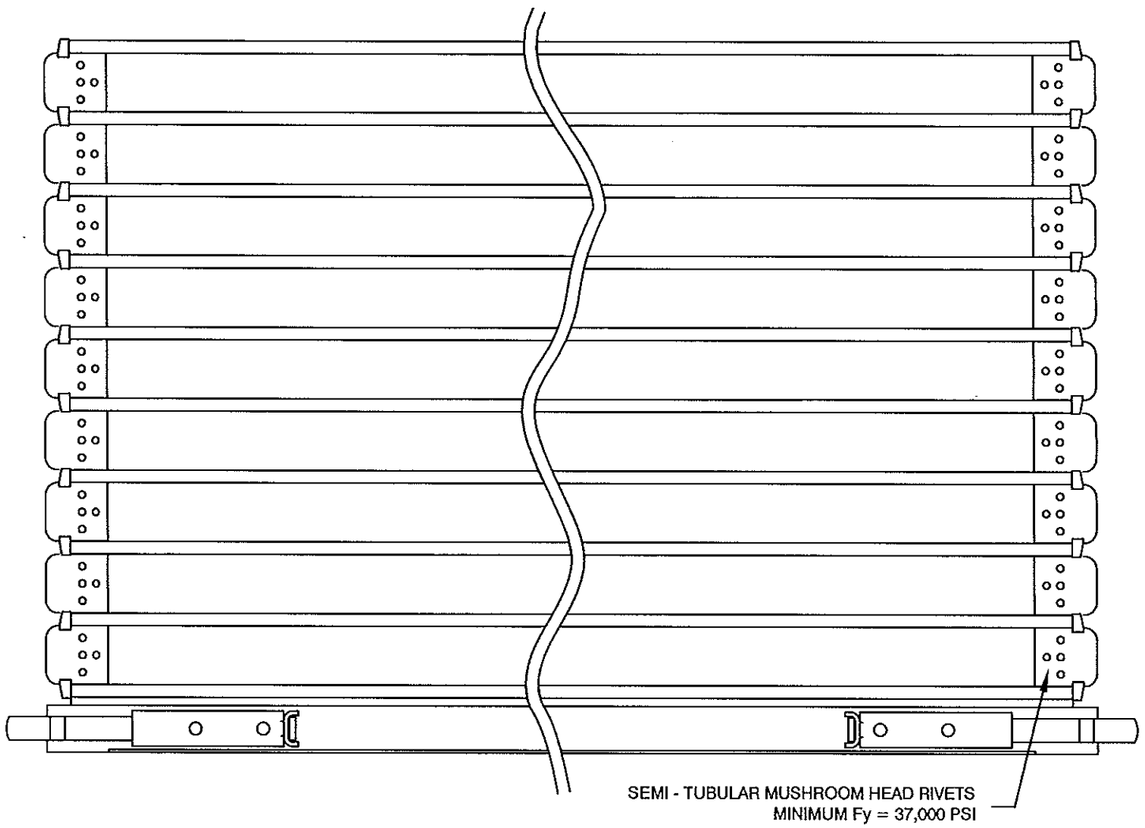

NUMBER OF SLATS TO ACCOMMODATE OPENING HEIGHT

COIL SIDE ELEVATION

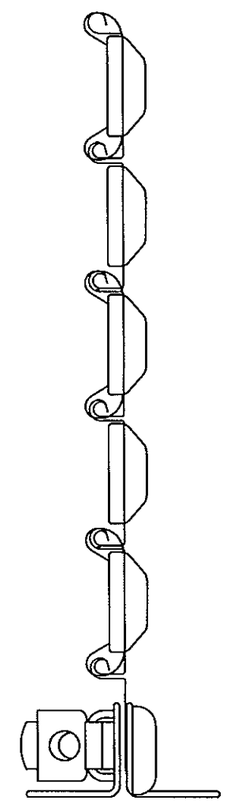

VERTICAL SECTION

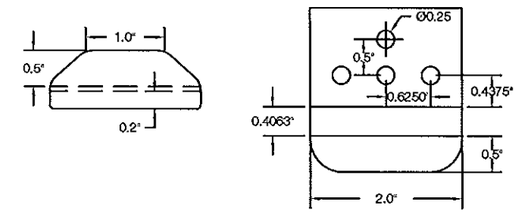

WINDLOCK

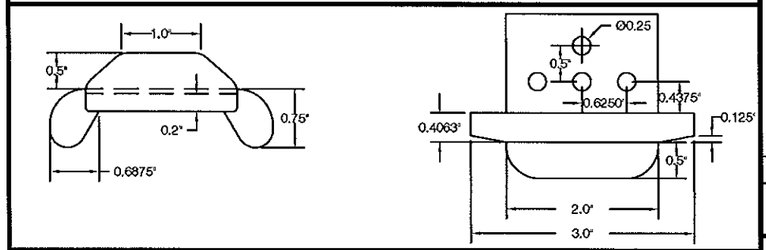

WINDLOCK / ENDLOCK

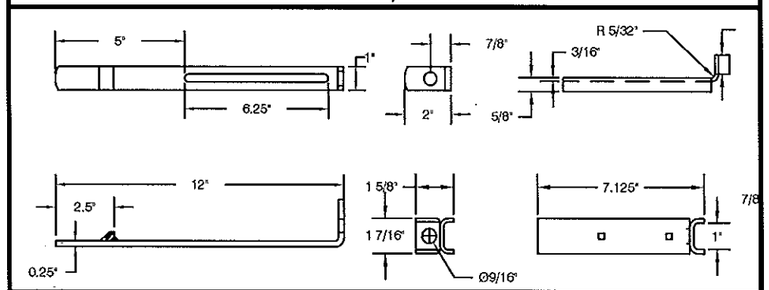

United States Patent Numbers: 5,657,805 - 5,419,386

DATE	NO.	REVISION RECORD	DRAWN	CHECK

REDI-STORM™
HURRICANE PROTECTION DEVICE
APPROVED MEANS OF EGRESS

UNLOCKED POSITION

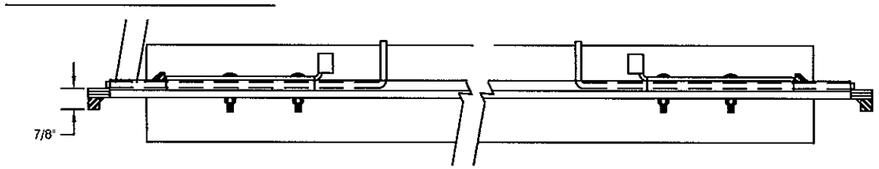

LOCKED POSITION

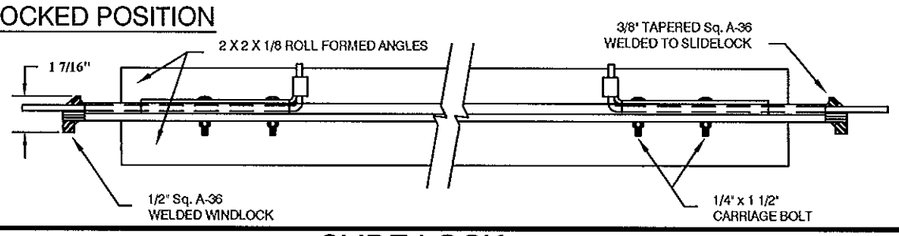

SLIDE LOCK

REDI-STORM 16

F.P. DEGIOVANNI P.E.
41 FLANDERS RD.
MOUNTAUK, N.Y. 11954
FL. LICENSE NO. 55071

SHEET: 2 of 3
DRAWN BY
APPR. BY
DATE 12/12/08
DRAWING # ALP16-2
REV. 1

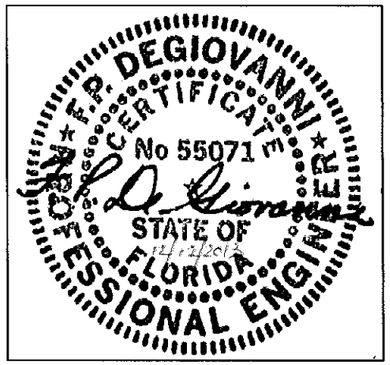

FOR DADE COUNTY USE ONLY

PRODUCT RENEWED
as complying with the Florida
Building Code
Acceptance No 13-0916.06
Expiration Date 12/11/2014
By
Miami Dade Product Control

ALPINE® OVERHEAD DOORS, INC.
8 HULSE RD. E. SETAUKET, N.Y. 11733
TEL: (631)473-9300 FAX: (631)642-0800

© COPYRIGHT 2008

PROJECT: PROJECT

CONTRACT# / P.O.#: Computer Generated Drawing

FILE NAME: M:\Dwg\OtherInformatio\Redistorm\16\ALP16-3.dwg

F, E, Z, Zc & Ew MOUNTS FOR MOUNTING BETWEEN STEEL JAMBS SUITABLE TO ACCEPT REACTION FORCES

TYPE MOUNT	DOOR WIDTH (ft-in)	SLAT THICK (ft-in)	MOUNTING DIMENSIONS (in) (See Mounting Conditions) a	b	c	d	e	f	g	MAXIMUM SLIP (in)	D = BOLT DIA., S = BOLT SPACING (in) Pt = BOLT TENSION FORCE, Ps = BOLT SHEAR FORCE 1D (in)	1S (in)	1Pt (lbs)	1Pv (lbs)	2D (in)	2S (in)	2Pt (lbs)	2Pv (lbs)	DEFL. (in)	W'BAR THICK (in)	RIVETS NO/DIA.	WELD LEN. (in)	NET REACT FORCE / ft. Fx	Fy
F	16'-0"	0.0280"	1.6875	1.6875	1.0625	1.375	0.9375	N/A	N/A	0.5	0.5	12	6721	418	N/A	N/A	N/A	N/A	8.54	0.5	4 / 0.25	3	2379	418
	15'-0"	0.0280"	1.6875	1.625	1.0625	1.375	0.9375	N/A	N/A	0.4375	0.5	13	6870	415	N/A	N/A	N/A	N/A	7.77	0.5	4 / 0.25	3	2259	383
	14'-0"	0.0280"	1.6875	1.557	1.0625	1.375	0.9375	N/A	N/A	0.370	0.5	13	6518	377	N/A	N/A	N/A	N/A	6.91	0.5	4 / 0.25	3	2159	348
	13'-0"	0.0280"	1.6875	1.469	1.0625	1.375	0.9375	N/A	N/A	0.281	0.5	14	6985	369	N/A	N/A	N/A	N/A	5.81	0.5	4 / 0.25	3	2173	316
	12'-0"	0.0280"	1.375	1.406	0.875	1.375	0.75	N/A	N/A	0.219	0.375	8	3844	188	N/A	N/A	N/A	N/A	4.93	0.5	4 / 0.25	3	2109	282
E	16'-0"	0.0280"	1.6875	1.6875	1.0625	1.375	0.9375	1.75	1.375	0.5	0.5	12	6669	415	0.625	12	6801	2360	8.53	0.5	4 / 0.25	3	2360	415
	15'-0"	0.0280"	1.6875	1.62	1.0625	1.375	0.9375	1.75	1.375	0.4375	0.5	13	6811	412	0.625	13	6999	2425	7.75	0.5	4 / 0.25	3	2239	380
	14'-0"	0.0280"	1.6875	1.547	1.0625	1.375	0.9375	1.75	1.375	0.360	0.5	13	6557	375	0.625	13	6803	2356	6.8	0.5	4 / 0.25	3	2175	347
	13'-0"	0.0280"	1.6875	1.469	1.0625	1.375	0.9375	1.75	1.375	0.281	0.375	8	3947	209	0.625	13	6715	2328	5.77	0.5	4 / 0.25	3	2149	314
	12'-0"	0.0280"	1.375	1.406	0.875	1.375	0.75	1.50	1.375	0.219	0.375	8	3795	186	0.625	14	6996	2429	4.9	0.5	4 / 0.25	3	2082	279
Z	16'-0"	0.0280"	1.6875	1.6875	1.0625	1.375	0.875	1.4375	2.0	0.5	0.5	12	6721	418	0.625	16	4568	3171	8.54	0.5	4 / 0.25	3	2379	418
	15'-0"	0.0280"	1.6875	1.625	1.0625	1.375	0.875	1.4375	2.0	0.4375	0.5	13	6870	415	0.5	11	2964	2070	7.74	0.5	4 / 0.25	3	2259	383
	14'-0"	0.0280"	1.6875	1.5625	1.0625	1.375	0.875	1.4375	2.0	0.375	0.5	13	6518	377	0.5	11	2813	1979	6.91	0.5	4 / 0.25	3	2159	348
	13'-0"	0.0280"	1.6875	1.469	1.0625	1.375	0.875	1.4375	2.0	0.281	0.5	14	6985	369	0.5	11	2800	1992	5.79	0.5	4 / 0.25	3	2173	316
	12'-0"	0.0280"	1.375	1.406	0.875	1.375	1.25	1.25	2.0	0.219	0.375	8	3844	188	0.5	12	2942	2109	4.92	0.5	4 / 0.25	3	2109	282
Zc	16'-0"	0.0280"	1.6875	1.750	1.0625	1.375	0.875	1.4375	2.0	0.5625	0.5	12	6645	429	0.625	9.625	2716	1872	9.2	0.5	4 / 0.25	3	2333	429
	15'-0"	0.0280"	1.6875	1.625	1.0625	1.375	0.875	1.4375	2.0	0.4375	0.5	12	6705	400	0.625	9.625	2742	1917	7.87	0.5	4 / 0.25	3	2391	400
	14'-0"	0.0280"	1.6875	1.5625	1.0625	1.375	0.875	1.4375	2.0	0.375	0.5	13	6889	396	0.625	9.625	2602	1831	7.05	0.5	4 / 0.25	3	2283	365
	13'-0"	0.0280"	1.6875	1.50	1.0625	1.375	0.875	1.4375	2.0	0.3125	0.5	13	6542	358	0.625	9.625	2471	1751	6.2	0.5	4 / 0.25	3	2183	330
	12'-0"	0.0280"	1.375	1.406	0.875	1.375	1.25	1.25	2.0	0.25	0.5	15	6950	358	0.5	7.5	1733	1265	5.3	0.5	4 / 0.25	3	2025	286
															WELD WIDTH (in)	WELD PITCH (in)	WELD LENGTH (in)							
Ew	16'-0"	0.0280"	1.6875	1.6875	1.0625	1.375	0.9375	1.625	N/A	0.5	0.5	12	6704	417	2	12	2802	2372	8.57	0.5	4 / 0.25	3	2372	417
	15'-0"	0.0280"	1.6875	1.625	1.0625	1.375	0.9375	1.625	N/A	0.4375	0.5	13	6850	414	2	12	2662	2252	7.76	0.5	4 / 0.25	3	2252	382
	14'-0"	0.0280"	1.6875	1.5625	1.0625	1.375	0.9375	1.625	N/A	0.375	0.5	13	6599	377	2	12	2586	2189	6.81	0.5	4 / 0.25	3	2189	348
	13'-0"	0.0280"	1.6875	1.469	1.0625	1.375	0.9375	1.625	N/A	0.281	0.5	14	6959	368	2	12	2551	2165	5.80	0.5	4 / 0.25	3	2165	315
	12'-0"	0.0280"	1.375	1.4375	0.875	1.375	0.75	1.5	N/A	0.219	0.375	8	3827	187	2	12	2468	2100	4.91	0.5	4 / 0.25	3	2100	281

United States Patent Numbers: 5,657,805 - 5,419,386

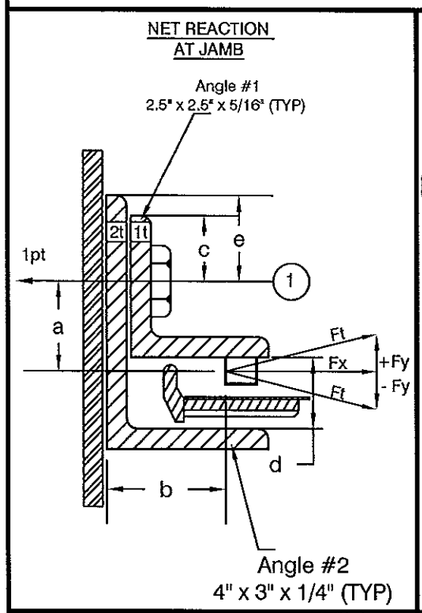

F-MOUNT

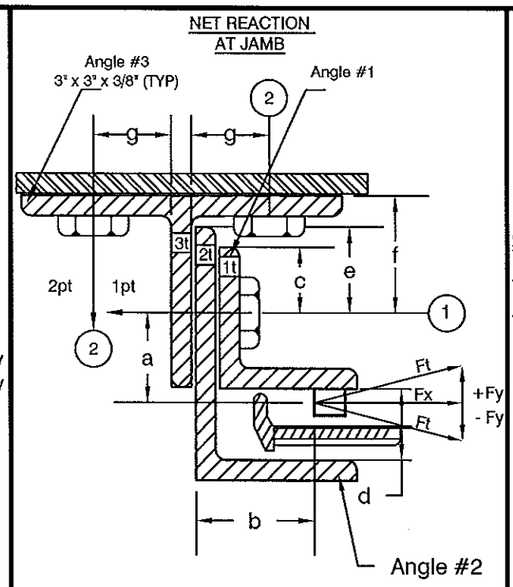

E, Z OR Zc-MOUNT

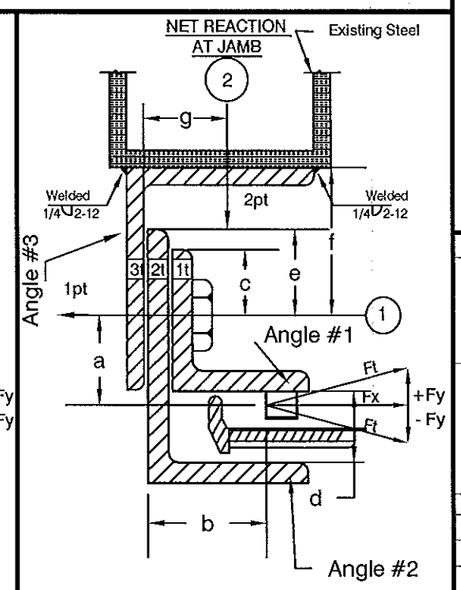

Ew-MOUNT

NOTES:

01. The following calculation are based on actual testing result on the Slat Deflection curve assuming the shape of a Catenary as soon as the Windlocks Engage the Guides. The Windlocks limit the Slat Deflection and Bending Stress and are designed to engage Guides prior to the Slats attaining maximum allowable deflections and Bending Stress without Restraints.

DESIGN PRESSURE RATING + / - 60 PSF

02. It shall be the responsibility of the Contractor / Owner to verify that the structure is designed to support forces Fx and Fy at both Jambs.

03. Bolts to be as per ASTM A449 Except for Mounting to Concrete Jambs which shall be ASTM 193-B7 threaded rod bonded with Simpson Strong-tie Adhesive Anchor System or equal. Special Inspection required for Concrete Anchor Systems.

REDI-STORM 16

F.P. DEGIOVANNI P.E.
41 FLANDERS RD.
MOUNTAUK, N.Y. 11954
FL. LICENSE NO. 55071

SHEET: 3 of 3
DRAWN BY
APPR. BY
DATE 12/12/08
DRAWING # ALP16-3
REV. 1

F.P. DEGIOVANNI CERTIFICATE No 55071 STATE OF FLORIDA PROFESSIONAL ENGINEER

FOR DADE COUNTY USE ONLY

PRODUCT RENEWED
as complying with the Florida Building Code
Acceptance No 13-0916.06
Expiration Date 12/11/2014
By
Miami Dade Product Control

DRAWN | CHECK | REVISION RECORD | NO. | DATE

REDI-STORM™
HURRICANE PROTECTION DEVICE
APPROVED MEANS OF EGRESS

ALPINE® OVERHEAD DOORS, INC.
8 HULSE RD. E. SETAUKET, N.Y. 11733
TEL: (631)473-9300 FAX: (631)642-0800

© COPYRIGHT 2008