MIAMI-DADE COUNTY
DEPARTMENT OF REGULATORY AND ECONOMIC RESOURCES (RER)
BOARD AND CODE ADMINISTRATION DIVISION

MIAMI-DADE COUNTY, FLORIDA
PRODUCT CONTROL SECTION
11805 SW 26 Street, Room 208
T (786) 315-2590 F (786) 315-2599
www.miamidade.gov/economy

NOTICE OF ACCEPTANCE (NOA)

Wausau Window and Wall Systems
A Division of Apogee Wausau Group, Inc.
7800 International Drive
Wausau, WI 54401

SCOPE:

This NOA is being issued under the applicable rules and regulations governing the use of construction materials. The documentation submitted has been reviewed and accepted by Miami-Dade County RER-Product Control Section to be used in Miami-Dade County and other areas where allowed by the Authority Having Jurisdiction (AHJ).

This NOA shall not be valid after the expiration date stated below. The Miami-Dade County Product Control Section (In Miami-Dade County) and/ or the AHJ (in areas other than Miami-Dade County) reserve the right to have this product or material tested for quality assurance purposes. If this product or material fails to perform in the accepted manner, the manufacturer will incur the expense of such testing and the AHJ may immediately revoke, modify, or suspend the use of such product or material within their jurisdiction. RER reserves the right to revoke this acceptance, if it is determined by Miami-Dade County Product Control Section that this product or material fails to meet the requirements of the applicable building code.

This product is approved as described herein, and has been designed to comply with the Florida Building Code, including the High Velocity Hurricane Zone.

DESCRIPTION: Series "3250i/ 4250i/ 4250i-IS/ 4250i-SDH-HP-XLT" Thermal Broken Outswing Aluminum Casement Window – L.M.I.

APPROVAL DOCUMENT: Drawing No. **W13-29**, titled "Series 3-4250i-HP-XLT P.O. Casement Wdw. (L.M.I.)", sheets 01 through 30 of 30, dated 06/04/13 with revision "B" dated 03/13/14, prepared by Al-Farooq Corporation, signed and sealed by Javad Ahmad, P. E., bearing the Miami-Dade County Product Control Section Approval stamp with the Notice of Acceptance number and Approval date by the Miami-Dade County Product Control Section.

MISSILE IMPACT RATING: Large and Small Missile Impact Resistant

LABELING: Each unit shall bear a permanent label with the manufacturer's name or logo, city, state, series, and following statement: "Miami-Dade County Product Control Approved", unless otherwise noted herein.

RENEWAL of this NOA shall be considered after a renewal application has been filed and there has been no change in the applicable building code negatively affecting the performance of this product.

TERMINATION of this NOA will occur after the expiration date or if there has been a revision or change in the materials, use, and/ or manufacture of the product or process. Misuse of this NOA as an endorsement of any product, for sales, advertising or any other purposes shall automatically terminate this NOA. Failure to comply with any section of this NOA shall be cause for termination and removal of NOA.

ADVERTISEMENT: The NOA number preceded by the words Miami-Dade County, Florida, and followed by the expiration date may be displayed in advertising literature. If any portion of the NOA is displayed, then it shall be done in its entirety.

INSPECTION: A copy of this entire NOA shall be provided to the user by the manufacturer or its distributors and shall be available for inspection at the job site at the request of the Building Official.

This NOA consists of this page 1 and evidence pages E-1, E-2 and E-3, as well as approval document mentioned above.

The submitted documentation was reviewed by **Jaime D. Gascon, P. E.**

MIAMI-DADE COUNTY APPROVED

J. Gascon 3/26/14

Wausau Window and Wall Systems,
A Division of Apogee Wausau Group, Inc.

NOTICE OF ACCEPTANCE: EVIDENCE SUBMITTED

A. DRAWINGS

1. Manufacturer's die drawings and sections.
2. Drawing No. **W13–29**, titled "Series 3–4250i–HP–XLT P.I. Casement Wdw. (L.M.I.)", sheets 01 through 30 of 30, dated 06/04/13 with revision "**B**" dated 03/13/14, prepared by Al–Farooq Corporation, signed and sealed by Javad Ahmad, P. E.

B. TESTS

1. Test reports on: 1) Air Infiltration Test, per FBC, TAS 202–94
   2) Uniform Static Air Pressure Test, Loading per FBC, TAS 202–94
   3) Water Resistance Test, per FBC, TAS 202–94
   4) Large Missile Level "E" 80 feet per second Impact Test per ASTM E 1996 and FBC, TAS 201–94
   5) Cyclic Wind Pressure Loading per FBC, TAS 203–94
   6) Forced Entry Test, per FBC 2411.3.2.1, and TAS 202–94

   along with marked–up drawings and installation diagram of a Casement Window, prepared by Quast Consulting & Testing, Inc., Test Report No. **QCT–13–2893.01**, dated 05/01/13, signed and sealed by Brain M. Sasman, P. E.
2. Test reports on: 1) Air Infiltration Test, per FBC, TAS 202–94
   2) Uniform Static Air Pressure Test, Loading per FBC, TAS 202–94
   3) Water Resistance Test, per FBC, TAS 202–94
   4) Large Missile Impact Test per FBC, TAS 201–94
   5) Cyclic Wind Pressure Loading per FBC, TAS 203–94
   6) Forced Entry Test, per FBC 2411.3.2.1, and TAS 202–94

   along with marked–up drawings and installation diagram of a Casement Window, prepared by Quast Consulting & Testing, Inc., Test Report No. **QCT–13–2892.01**, dated 04/05/13, signed and sealed by Brain M. Sasman, P. E.

C. CALCULATIONS

1. Anchor calculations and structural analysis, complying with **FBC–2010**, dated 09/12/13, prepared by Al–Farooq Corporation, dated 01/09/14, signed and sealed by Javad Ahmad, P. E.
2. **Glazing complies with ASTM E1300–04/ 09a**

D. QUALITY ASSURANCE

1. Miami–Dade Department of Regulatory and Economic Resources (RER).

Jaime D. Gascon, P. E.
Product Control Section Supervisor
NOA No. 13–0917.04
Expiration Date: April 03, 2019
Approval Date: April 03, 2014

E. MATERIAL CERTIFICATIONS

1. Notice of Acceptance No. **11–0624.02** issued to **E.I. DuPont DeNemours & Co.**, Inc. for their "**DuPont SentryGlas® Interlayer**" dated 08/25/11, expiring on 01/14/17.
2. Notice of Acceptance No. **12–1231.08** issued to **Eastman Chemical Company (MA)** for their "**Saflex CP – Saflex and Saflex HP Composite Glass Interlayers with PET Core**" dated 03/28/13, expiring on 12/11/18.
3. Material Data Sheet for "insulating profiles made of PA 66 GF25 – dry impact resistant, to fit into Technoform I–Strut™ Aluminum Standard Reglet.
4. TREMCO Part **PLOYshim II Tape** complying with AAMA 800–92 Sections 804.3, 806.3 and 807.3, i.e., Cross linked butyl rubber with shore "00" Hardness 57 Durometer; Temperature range 20°F to 120°F; shelf life for 24 months below 80°F; heat resistant after 2 months at 200°F, –20°F and ultraviolet and aging after 1,000 hours excellent adhesion.
5. TREMCO Part **EDPM Wedge Gaskets** complying with the following: ASTM D 2240 Shore "A" Hardness 68–71 Durometer; ASTM C746 Brittleness Temperature –40°F passed; ASTM D412 Standard Test Methods for Vulcanized Rubber and Thermoplastic Elastomers—Tension of 1810—1925 PSI; ASTM D395B Test Methods for Rubber Property—Compression Set for 22 HRS 158°F 22%—28%; ASTM D 624 Test Method for Tear Strength of Conventional Vulcanized Rubber and Thermoplastic Elastomers of 143 lb./ in.—209 lb./in. and ASTM D 1149 Ozone resistance 6.852 ft.–psf for 100 hrs. at 104°F w/ 22% elongation.
6. TREMCO Part **Dense Rubber Setting Block** complying with the following: ASTM D 2240 Shore "A" Hardness 80 Durometer; ASTM C746 Brittleness Temperature –40°F passed; ASTM D412 Standard Test Methods for Vulcanized Rubber and Thermoplastic Elastomers—Tension of 1095 PSI; ASTM D395B Test Methods for Rubber Property—Compression Set for 22 HRS 158°F 12.9%; ASTM D 624 Test Method for Tear Strength of Conventional Vulcanized Rubber and Thermoplastic Elastomers of 92 lb./ in.
7. Test report No. **ATI–61261.01–106-18**, prepared by Architectural Testing, Inc., dated 12/08/05, with revision date 01/04/06, issued to **Technoform**, for their **I–Strut Insulating Strip** comprised of Polyamide with 25% glass fibers, per **ASTM D635–03** "Standard Test Method for Rate of Burning and/or Extent and Time of Burning of Plastics in a Horizontal Position" and ASTM **D2843–99** "Standard Test Method for the Density of Smoke from the Burning Decomposition of Plastics", signed and sealed by Joseph A. Reed, P. E.

Jaime D. Gascon, P. E.
Product Control Section Supervisor
NOA No. 13–0917.04
Expiration Date: April 03, 2019
Approval Date: April 03, 2014

E. MATERIAL CERTIFICATIONS (CONTINUED)

8. Test report No. **ETC–07–1043–19094.0**, prepared by ETC Laboratories, dated 02/04/08, issued to Technoform Bautec NA, Inc., for their **I–Strut Insulating Strip** comprised of Polyamide with 25% glass fibers, per **ASTM D638–03** *"Standard Test Methods for Tensile Properties of Plastics"*, for exposed & unexposed sample per Xenon Arc after 4500 Hours, signed and sealed by Joseph Labora Doldan, P. E.
9. **Tensile Test** prepared by Certified Testing Laboratories, Test Report No. **CTLA–718WB/ DADE 01021 and 719G / DADE 01021**, dated 11/ 29/01 and 06/04/01, tested per **ASTM E8/A370 or B557,** signed and sealed by Ramesh C. Patel, P. E.
10. Test report No. **ETC–08–1043–20974.0**, prepared by ETC Laboratories, dated 07/01/08, issued to Technoform, for their **I–Strut Insulating Strip** comprised of Polyamide with 25% glass fibers, per **ASTM D1929–96** *"Standard Test Method for Ignition Properties of Plastics"*, signed and sealed by Joseph Doldan, P. E.

F. STATEMENTS

1. Statement letter of conformance and complying with **FBC–2014**, issued by Al–Farooq Corporation, dated 04/02/14, signed and sealed by Javad Ahmad, P. E.
2. Statement letter of no financial interest, conformance and complying with **FBC–2010**, issued by Al–Farooq Corporation, dated 07/08/13, signed and sealed by Javad Ahmad, P. E.
3. Laboratory compliance letter for Test Reports No.'s **QCT–13–2892.01** and **QCT–13–2893.01**, issued by Quast Consulting & Testing, Inc., dated 04/05/13 and 05/01/13, both signed and sealed by Brain M. Sasman, P. E.
4. Proposal No. **12–2167** issued by Product Control, dated 02/11/13, signed by Manuel Perez, P. E.

G. OTHERS

1. None.

Jaime D. Gascon, P. E.
Product Control Section Supervisor
NOA No. 13–0917.04
Expiration Date: April 03, 2019
Approval Date: April 03, 2014

THESE WINDOWS ARE RATED FOR LARGE & SMALL MISSILE IMPACT.
SHUTTERS ARE NOT REQUIRED.

Series 3-4250i-HP-XLT
Aluminum P.O. Casement Window

APPROVAL APPLIES TO SINGLE UNITS OR SIDE BY SIDE COMBINATIONS OF TWO OR MORE UNITS.
CODE REQUIREMENTS FOR SAFEGUARDS MUST BE OBSERVED.

FOR SINGLE CASEMENT WINDOWS DESIGN LOAD CAPACITY SEE TABLE #1.

FOR CASEMENT-FIXED AND CASMT-CASMT COMBINATION WITH INTEGRAL IMPOST, SEE TABLE #1 FOR CASEMENT WINDOW CAPACITY, TABLE #2 FOR IMPOST CAPACITY AND SEPARATE NOA FOR FIXED LITE CAPACITY.
LOWER VALUE FROM TABLES 1, 2 OR FIX LITE NOA WILL APPLY TO ENTIRE SYSTEM.

FOR CASEMENT--FIXED AND CASMT-CASMT COMBINATION WITH STACK MULLION SEE TABLE #1 FOR CASEMENT WINDOW CAPACITY, TABLE #3 FOR STACK MULLION CAPACITY AND SEPARATE NOA FOR FIXED LITE CAPACITY.
LOWER VALUE FROM TABLES 1, 3 OR FIX LITE NOA WILL APPLY TO ENTIRE SYSTEM.

THIS PRODUCT HAS BEEN DESIGNED AND TESTED TO COMPLY WITH THE REQUIREMENTS OF THE FLORIDA BUILDING CODE INCLUDING HIGH VELOCITY HURRICANE ZONE (HVHZ).

WOOD BUCKS BY OTHERS, MUST BE ANCHORED PROPERLY TO TRANSFER LOADS TO THE STRUCTURE.

ANCHORS SHALL BE AS LISTED, SPACED AS SHOWN ON DETAILS, ANCHORS EMBEDMENT TO BASE MATERIAL SHALL BE BEYOND WALL DRESSING OR STUCCO.

ANCHORING OR LOADING CONDITIONS NOT SHOWN IN THESE DETAILS ARE NOT PART OF THIS APPROVAL.

A LOAD DURATION INCREASE IS USED IN DESIGN OF ANCHORS INTO WOOD ONLY.

ALL SHIMS TO BE HIGH IMPACT, NON-METALLIC AND NON-COMPRESSIBLE.

MATERIALS INCLUDING BUT NOT LIMITED TO STEEL/METAL SCREWS, THAT COME INTO CONTACT WITH OTHER DISSIMILAR MATERIALS SHALL MEET THE REQUIREMENTS OF THE FLORIDA BLDG. CODE SECTION 2003.8.4.

INDEX OF DRAWING

SHEET NO.	DESCRIPTION
1	GENERAL NOTES
2	CASEMENT WINDOW, IMPOST AND MULLION CAPACITY CHARTS
3	SINGLE WINDOW ELEVATIONS ANCHOR SPACING FOR THREE ANCHORING METHODS
4	WINDOW ELEVATIONS WITH IMPOST & MULLION ANCHORS QUANTITIES AT IMPOST AND MULLION ENDS
5	GLAZING DETAILS LEVEL 'D' IMPACT
6	GLAZING DETAILS LEVEL 'E' IMPACT
7 THRU 10	P.O. CASEMENT WINDOW VERTICAL AND HORIZONTAL SECTION DETAILS STANDARD FRAMES ANCHORS THRU SLIDE IN CLIPS AT FRAME
11 & 12	FIXED LITE VERTICAL AND HORIZONTAL SECTION DETAILS STANDARD FRAMES ANCHORS THRU SLIDE IN CLIPS AT FRAME
13	ALTERNATE ANCHORING METHOD ANCHORS THRU SLIDE IN CLIPS AT RECEPTOR
14	ALTERNATE ANCHORING METHOD ANCHORS DIRECTLY THRU RECEPTORS
15 THRU 18	EXTRUSION DETAILS FOR STANDARD FRAMES
19	BILL OF MATERIALS
20	CORNER CONSTRUCTION DETAILS
21 THRU 25	VERTICAL AND HORIZONTAL SECTION DETAILS ALTERNATE OS FRAME OPTION
26 THRU 30	VERTICAL AND HORIZONTAL SECTION DETAILS ALTERNATE SDH FRAME OPTION

Approved as complying with the
Florida Building Code
Date 04/03/14
NOA# 13-0917.04
Miami-Dade Product Control
By

INSUL. LAM. GLASS
LARGE MISSILE IMPACT

Engr: JAVAD AHMAD
CIVIL
FLA. PE # 70592
C.A.N. 3538

MAR 31 2014

AL-FAROOQ CORPORATION
ENGINEERS & PRODUCT DEVELOPMENT
1235 S.W. 87 AVE
MIAMI, FLORIDA 33174
TEL (305) 264-8100 FAX. (305) 262-6978

COMP-ANL\W13-29WW

Series 3-4250i-HP-XLT P.O. Casement Wdw. (L.M.I.)

Wausau Window & Wall Systems,
Division Of Apogee Wausau Group, Inc.
7800 INTERNATIONAL DRIVE
WAUSAU, WI 54401
TEL. (715) 845-2161 FAX. (715) 843-4055

revisions:

no	date	by	description
A	12.24.13		REV. PER RER COMMENTS
B	03.13.14		NO CHANGE THIS SHEET

date: 06-04-13
scale: -
dr. by: HAMID
chk. by:

drawing no.
W13-29

sheet 1 of 30

TABLE #1

CASEMENT WINDOW DESIGN LOAD CAPACITY – PSF					
WINDOW DIMS.		LEVEL 'D' IMPACT		LEVEL 'E' IMPACT	
WIDTH (W)	LENGTH (L)	EXT.(+)	INT.(–)	EXT.(+)	INT.(–)
36"	54"	80.0	80.0	100.0	100.0
42"		80.0	80.0	100.0	100.0
48"		80.0	80.0	100.0	100.0
54"		80.0	80.0	100.0	100.0
60"		80.0	80.0	100.0	100.0
36"	60"	80.0	80.0	100.0	100.0
42"		80.0	80.0	100.0	100.0
48"		80.0	80.0	100.0	100.0
54"		80.0	80.0	100.0	100.0
60"		80.0	80.0	100.0	100.0
36"	66"	80.0	80.0	100.0	100.0
42"		80.0	80.0	100.0	100.0
48"		80.0	80.0	100.0	100.0
54"		80.0	80.0	100.0	100.0
36"	72"	80.0	80.0	100.0	100.0
42"		80.0	80.0	100.0	100.0
48"		80.0	80.0	100.0	100.0
52"		80.0	80.0	100.0	100.0
36"	74-7/8"	80.0	80.0	100.0	100.0
42"		80.0	80.0	100.0	100.0
48"		80.0	80.0	100.0	100.0
50-7/8"		80.0	80.0	100.0	100.0

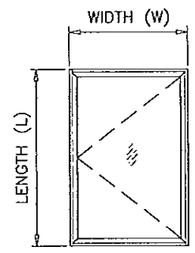

TABLE #2

INTEGRAL IMPOST DESIGN LOAD CAPACITY – PSF		
WINDOW DIMS.		EXT.(+)
WIDTH (W)	LENGTH (L)	INT.(–)
24"	54"	100.0
30"		100.0
36"		100.0
42"		100.0
48"		100.0
54"		100.0
60"		100.0
24"	60"	100.0
30"		100.0
36"		100.0
42"		100.0
48"		100.0
54"		100.0
24"	66"	100.0
30"		100.0
36"		100.0
42"		100.0
48"		100.0
24"	72"	100.0
30"		100.0
36"		100.0
42"		96.3
48"		87.7

$$\text{WIDTH (W)} = \frac{W1 + W2}{2}$$

TABLE #3

STACK MULLION DESIGN LOAD CAPACITY – PSF		
WINDOW DIMS.		EXT.(+)
WIDTH (W)	LENGTH (L)	INT.(–)
24"	54"	100.0
30"		100.0
36"		100.0
42"		100.0
48"		100.0
54"		100.0
60"		100.0
24"	60"	100.0
30"		100.0
36"		100.0
42"		100.0
48"		100.0
54"		100.0
24"	66"	100.0
30"		100.0
36"		100.0
42"		100.0
48"		100.0
24"	72"	100.0
30"		100.0
36"		100.0
42"		100.0
48"		92.1

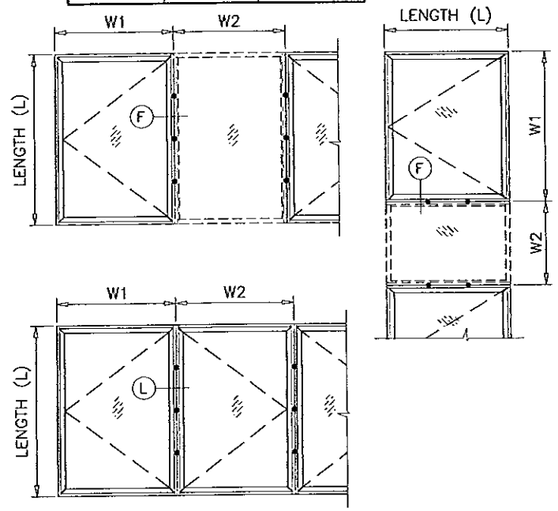

$$\text{WIDTH (W)} = \frac{W1 + W2}{2}$$

FOR FIXED LITE WINDOWS SEE SEPARATE NOA FOR DESIGN LOAD RATING AND DETAILS

NOTE:
GLASS CAPACITIES ON THIS SHEET ARE BASED ON ASTM E1300-09 (3 SEC. GUSTS) AND FLORIDA BUILDING COMMISSION DECLARATORY STATEMENT DCA05-DEC-219

Approved as complying with the Florida Building Code
Date 5-13-14
NOA# 13-0917.04
Miami-Dade Product Control
By

Engr: JAVAD AHMAD
CIVIL
FLA. PE # 70592
C.A.N. 3538

AL-FAROOQ CORPORATION
ENGINEERS & PRODUCT DEVELOPMENT
1235 S.W. 87 AVE
MIAMI, FLORIDA 33174
TEL (305) 264-8100 FAX. (305) 262-6978
COMP-ANL\W13-29WW

Series 3-4250i-HP-XLT P.O. Casement Wdw. (L.M.i.)

Wausau Window & Wall Systems,
Division Of Apogee Wausau Group, Inc.
7800 INTERNATIONAL DRIVE
WAUSAU, WI 54401 FAX. (715) 843-4055
TEL. (715) 845-2161

revisions:			
no	date	by	description
A	12.24.13		REV. PER RER COMMENTS
B	03.13.14		NO CHANGE THIS SHEET

date: 06-04-13
scale: –
dr. by: HAMID
chk. by:

drawing no.
W13-29

sheet 2 of 30

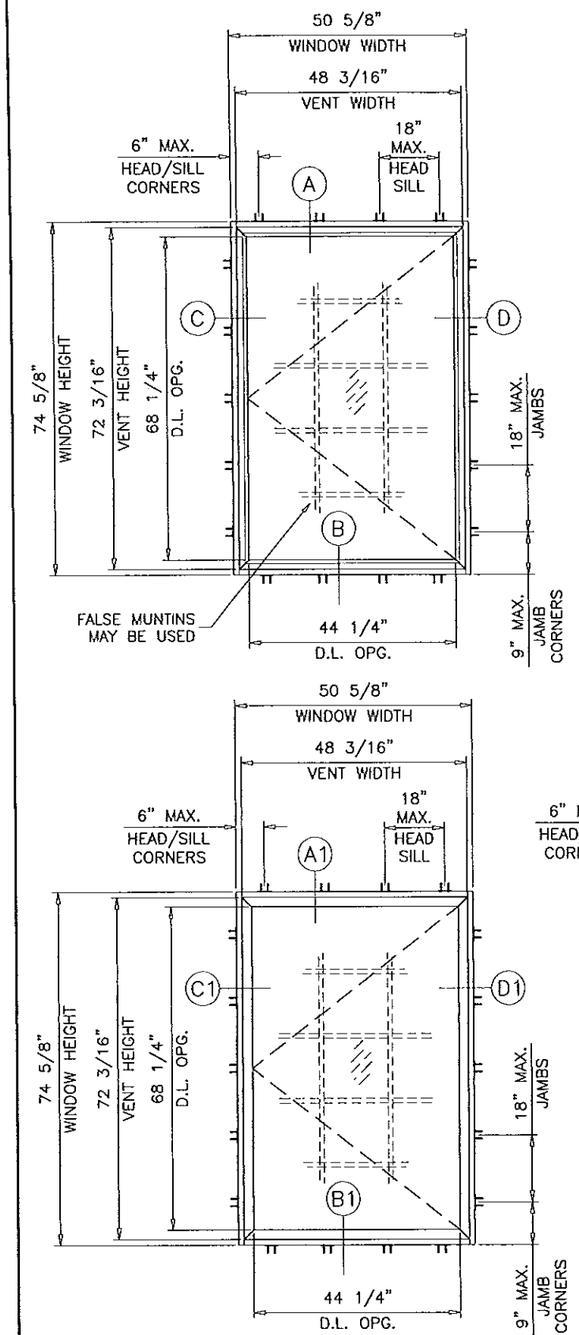

ANCHORS THRU
SLIDE IN CLIPS AT FRAMES
LEVEL 'D' & 'E' IMPACT
SEE SHEETS 7 & 8 FOR DETAILS

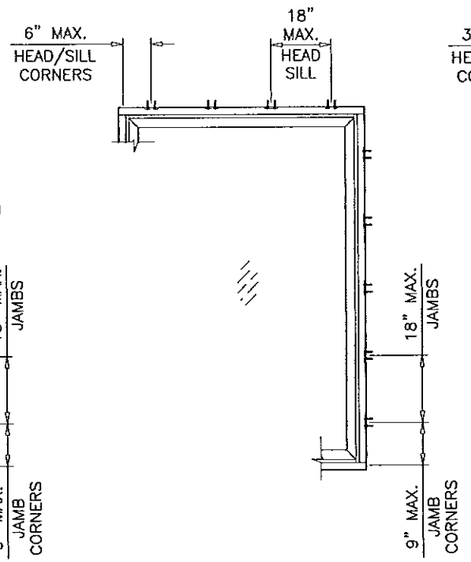

ANCHORS THRU
SLIDE IN CLIPS AT RECEPTOR
LEVEL 'D' IMPACT ONLY
SEE SHEET 13 FOR DETAILS

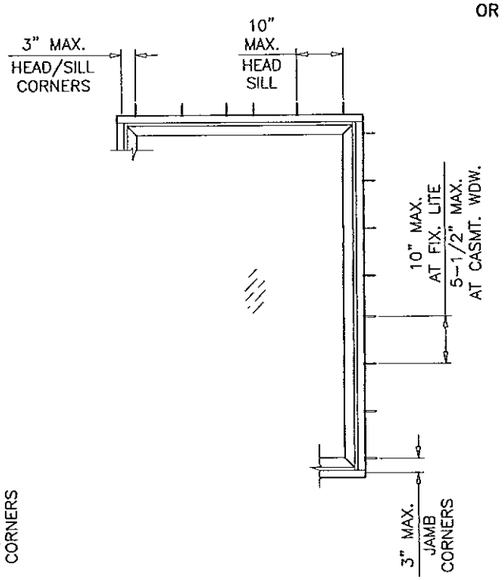

ANCHORS
DIRECTLY THRU RECEPTOR
LEVEL 'D' IMPACT ONLY
SEE SHEET 14 FOR DETAILS

TYPICAL ELEVATIONS

WOOD BUCKS AND METAL STRUCTURE NOT BY WASAU MUST SUSTAIN LOADS IMPOSED BY GLAZING SYSTEM AND TRANSFER THEM TO THE BUILDING STRUCTURE.

TYPICAL ANCHORS: SEE ELEV. FOR SPACING

1/4" DIA. ULTRACON BY 'ELCO' (Fu=177 KSI, Fy=155 KSI)

INTO 2BY WOOD BUCKS OR WOOD STRUCTURES
1-1/2" MIN. PENETRATION INTO WOOD

THRU 1BY BUCKS INTO CONC. OR MASONRY
1-3/4" MIN. EMBED INTO CONCRETE (HEAD/SILL)
1-1/4" MIN. EMBED INTO CONC. OR MASONRY (JAMBS)

DIRECTLY INTO CONC. OR MASONRY
1-3/4" MIN. EMBED INTO CONCRETE (HEAD/SILL)
1-1/4" MIN. EMBED INTO CONC. OR MASONRY (JAMBS)

1/4" DIA. SELF DRILLING SCREWS (GRADE 5 CRS)

INTO METAL STRUCTURES
STEEL : 12 GA. MIN. (Fy = 36 KSI MIN.)
ALUMINUM : 1/8" THK. MIN. (6063-T5 MIN.)
(STEEL IN CONTACT WITH ALUMINUM TO BE PLATED OR PAINTED)

TYPICAL EDGE DISTANCE

INTO CONCRETE AND MASONRY = 1-1/2" MIN.
INTO WOOD STRUCTURE = 1" MIN.
INTO METAL STRUCTURE = 3/4" MIN.

CONCRETE AT HEAD, SILL OR JAMBS f'c = 3000 PSI MIN.
C-90 HOLLOW/FILLED BLOCK AT JAMBS f'm = 2000 PSI MIN.
OR MASONRY AT JAMBS (MIN. 1.9 KSI & NORMAL WEIGHT PER ASTM C90-11B.)

Approved as complying with the
Florida Building Code
Date 13-0917.04
NOA# 13-0917.04
Miami Dade Product Control
By

Engr: JAVAD AHMAD
CIVIL
FLA. PE # 70592
C.A.N. 3538

AL-FAROOQ CORPORATION
ENGINEERS & PRODUCT DEVELOPMENT
1235 S.W. 87 AVE
MIAMI, FLORIDA 33174
TEL (305) 264-8100 FAX. (305) 262-6978

COMP-ANL\W13-29WW

Series 3-4250i-HP-XLT P.O. Casement Wdw. (L.M.I.)

Wausau Window & Wall Systems,
Division Of Apogee Wausau Group, Inc.
7800 INTERNATIONAL DRIVE
WAUSAU, WI 54401
TEL. (715) 845-2161 FAX. (715) 843-4055

revisions:

no	date	by	description
A	12.24.13		REV. PER RER COMMENTS
B	03.13.14		NO CHANGE THIS SHEET

date: 06-04-13
scale: 3/8"=1'-0"
dr. by: HAMID
chk. by:

drawing no.
W13-29

sheet 3 of 30

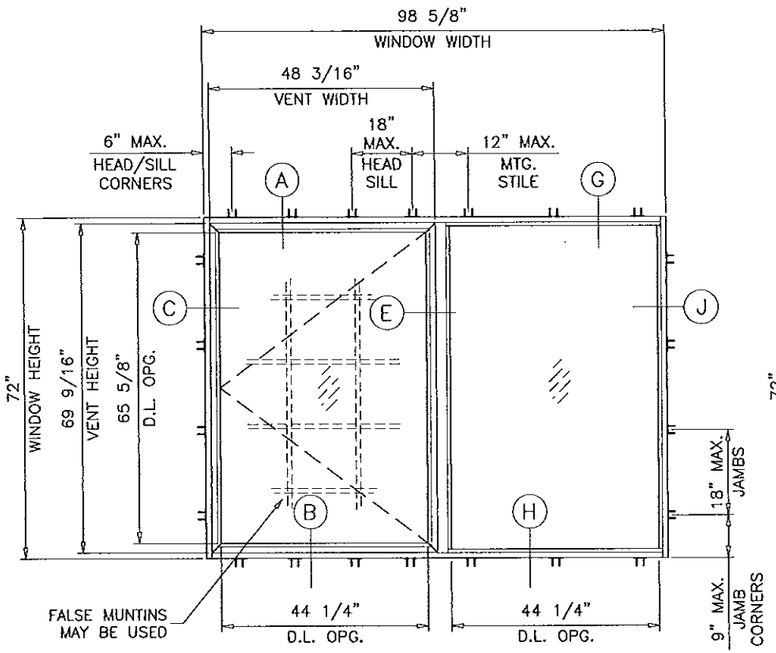

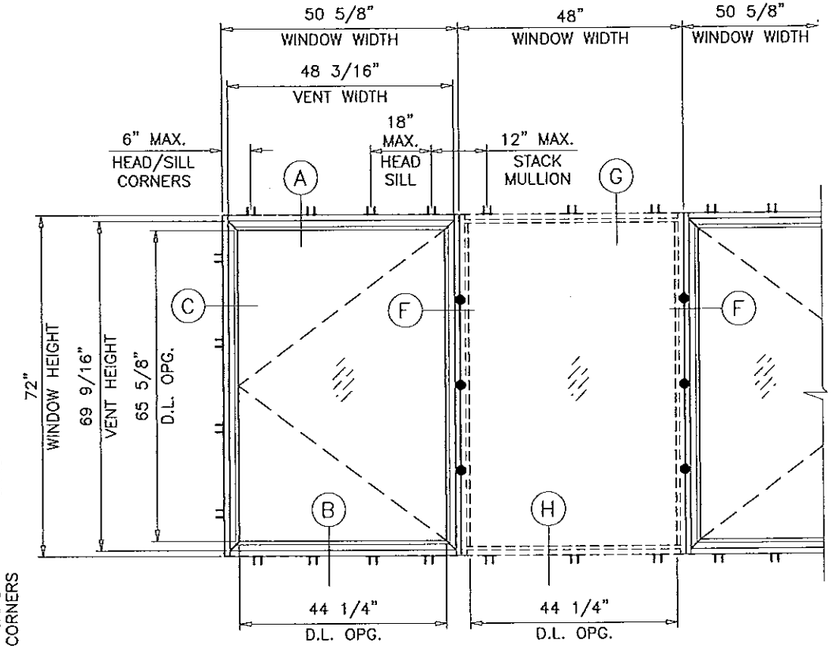

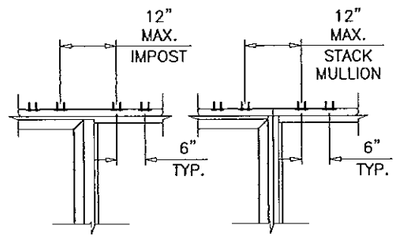

ANCHORS THRU
SLIDE IN CLIPS AT RECEPTOR
LEVEL 'D' IMPACT ONLY

(2) CLIPS AT EACH SIDE OF
MTG. STILE AND STACK MULLION ENDS
SEE SHEET 3 FOR WINDOW ANCHOR SPACING
AND SHEET 13 FOR DETAILS

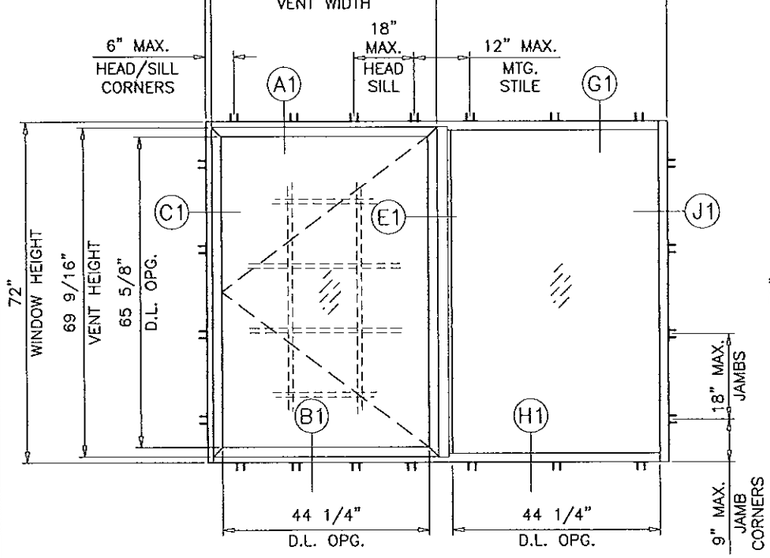

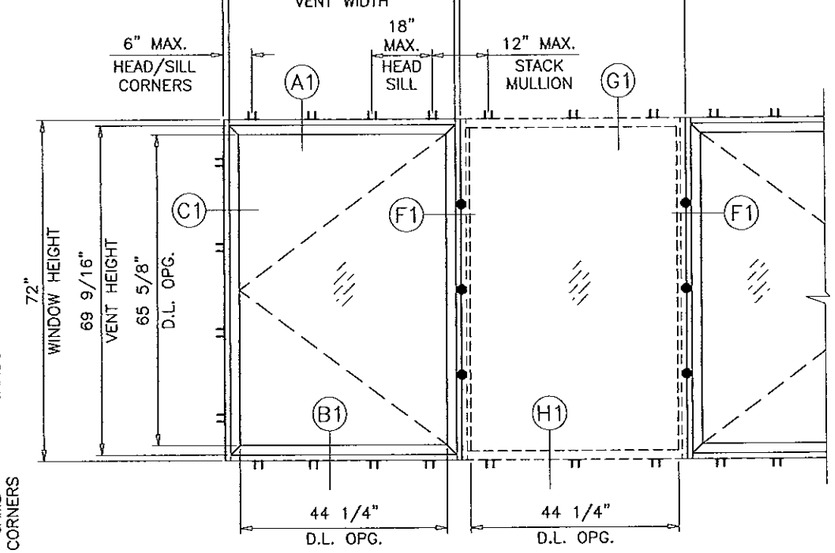

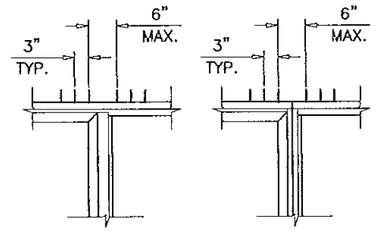

ANCHORS
DIRECTLY THRU RECEPTOR
LEVEL 'D' IMPACT ONLY

(3) ANCHORS AT EACH SIDE OF
MTG. STILE AND STACK MULLION ENDS
SEE SHEET 3 FOR WINDOW ANCHOR SPACING
AND SHEET 14 FOR DETAILS

ANCHORS THRU
SLIDE IN CLIPS AT FRAMES
LEVEL 'D' & 'E' IMPACT

(1) CLIP AT EACH SIDE OF
MTG. STILE AND STACK MULLION ENDS
SEE SHEET 3 FOR WINDOW ANCHOR SPACING
AND 7 & 8 FOR DETAILS

Approved as complying with the
Florida Building Code
Date 06/03/14
NOA# 13-0917.04
Miami-Dade Product Control
By

Engr: JAVAD AHMAD
CIVIL
FLA. PE # 70592
C.A.N. 3538

TYPICAL ELEVATIONS

AL-FAROOQ CORPORATION
ENGINEERS & PRODUCT DEVELOPMENT
1235 S.W. 87 AVE
MIAMI, FLORIDA 33174
TEL (305) 264-8100 FAX. (305) 262-6978

COMP-ANL\W13-29WW

Series 3-4250i-HP-XLT P.O. Casement Wdw. (L.M.I.)

Wausau Window & Wall Systems,
Division Of Apogee Wausau Group, Inc.
7800 INTERNATIONAL DRIVE
WAUSAU, WI 54401
TEL. (715) 845-2161 FAX. (715) 843-4055

revisions:

no	date	by	description
A	12.24.13	RER	REV. PER COMMENTS
B	03.13.14		NO CHANGE THIS SHEET

date: 06-04-13
scale: 3/8"=1'-0"
dr. by: HAMID
chk. by:

drawing no.
W13-29

sheet 4 of 30

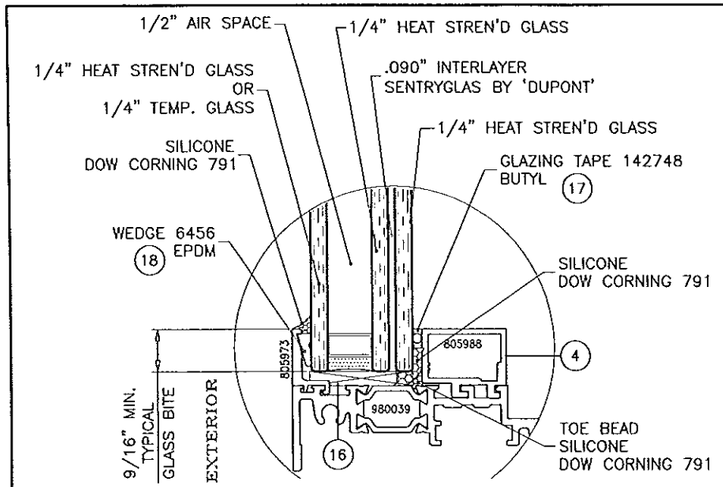

GLAZING DETAIL #1
AT FIXED LITE

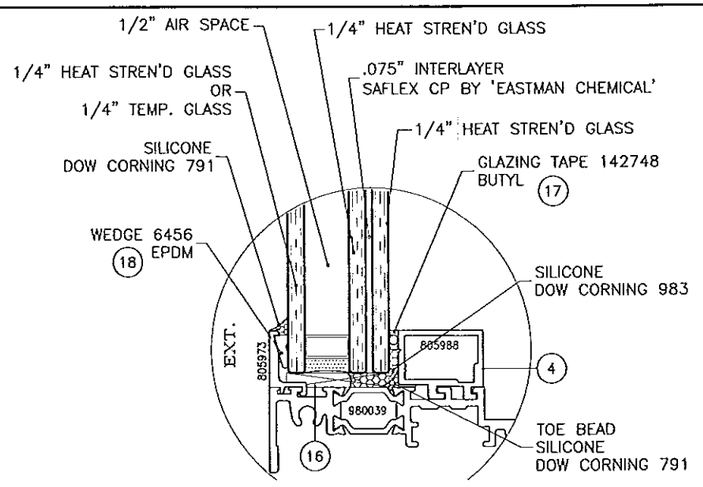

GLAZING DETAIL #2
AT FIXED LITE

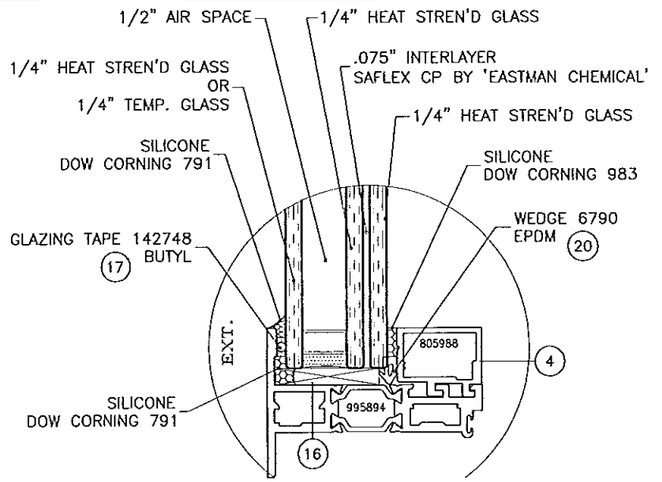

GLAZING METHOD #3

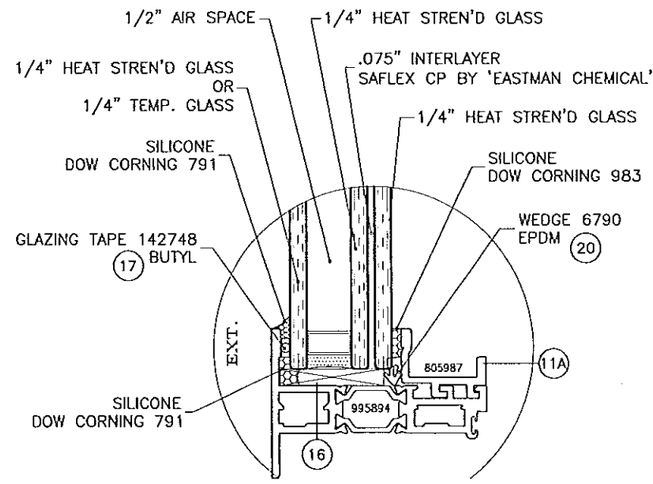

GLAZING METHOD #4

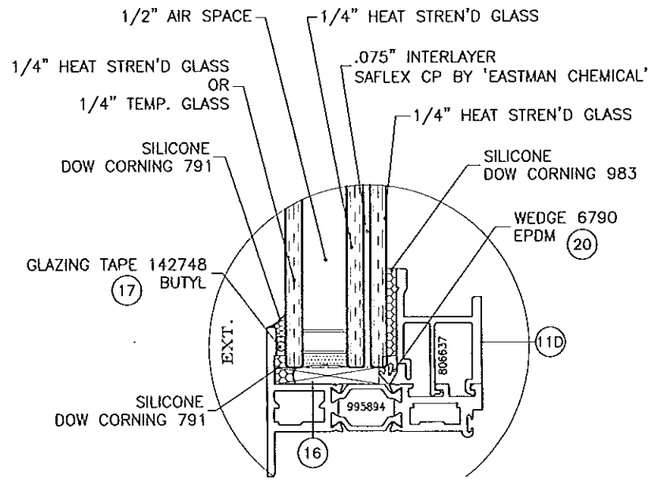

GLAZING METHOD #5

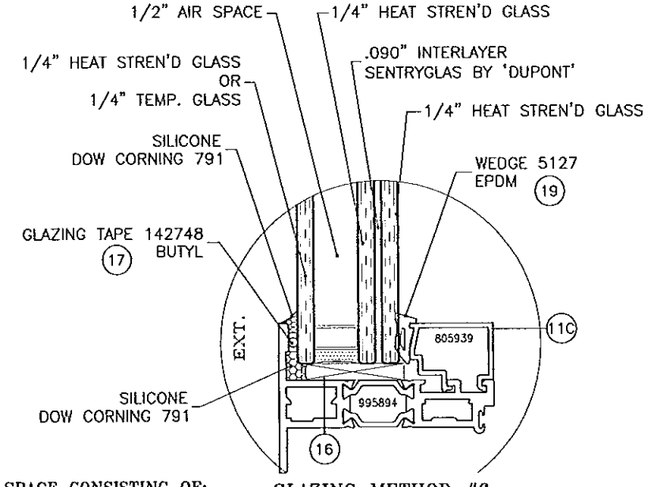

GLAZING METHOD #6

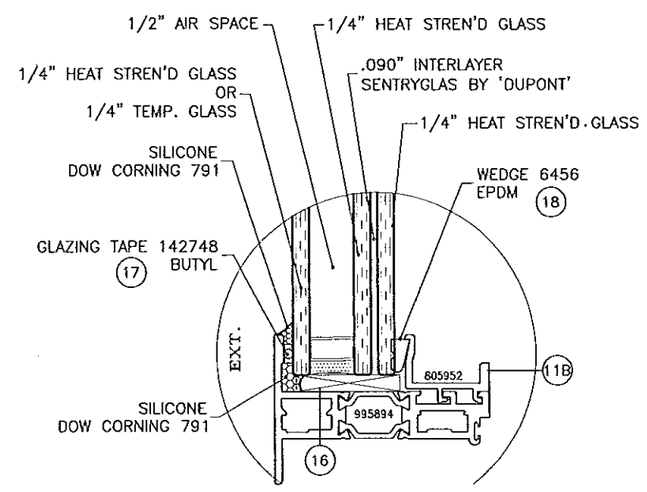

GLAZING METHOD #7

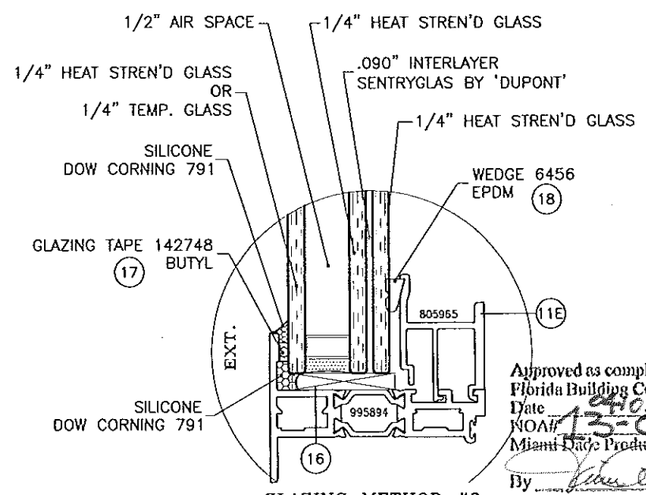

GLAZING METHOD #8

Approved as complying with the Florida Building Code
Date 04/03/14
NOA# 13-0917.04
Miami-Dade Product Control
By

1/2" AIR SPACE CONSISTING OF:

SPACER:
ALUMINUM OR ST. STEEL BOX SPACER AROUND THE PERIMETER OF THE GLASS.

PRIMARY SEALANT:
POLYISOBUTYLENE BETWEEN GLASS & SPACER.

SECONDARY SEALANT:
SILICONE BETWEEN GLASS PLIES AND OUTER EDGES OF SPACER.

GLAZING DETAILS LEVEL 'D' IMPACT

1-5/16" OVERALL INSUL. LAM. GLASS

TO QUALIFY FOR SMALL MISSILE IMPACT RATING
EXTERIOR PLY OF INSUL. LAM. GLASS MUST BE TEMPERED.

Engr: JAVAD AHMAD
CIVIL
FLA. PE # 70592
C.A.N. 3538

AL-FAROOQ CORPORATION
ENGINEERS & PRODUCT DEVELOPMENT
1235 S.W. 87 AVE
MIAMI, FLORIDA 33174
TEL (305) 264-8100 FAX. (305) 262-6978

COMP-ANL\W13-29WW

Series 3-4250i-HP-XLT P.O. Casement Wdw. (L.M.I.)

Wausau Window & Wall Systems,
Division Of Apogee Wausau Group, Inc.
7800 INTERNATIONAL DRIVE
WAUSAU, WI 54401
TEL. (715) 845-2161 FAX. (715) 843-4055

revisions:			
no	date	by	description
A	12.24.13		REV. PER RER COMMENTS
B	03.13.14		NO CHANGE THIS SHEET

date: 06-04-13
scale: 1/2" = 1"
dr. by: HAMID
chk. by:

drawing no.
W13-29

sheet 5 of 30

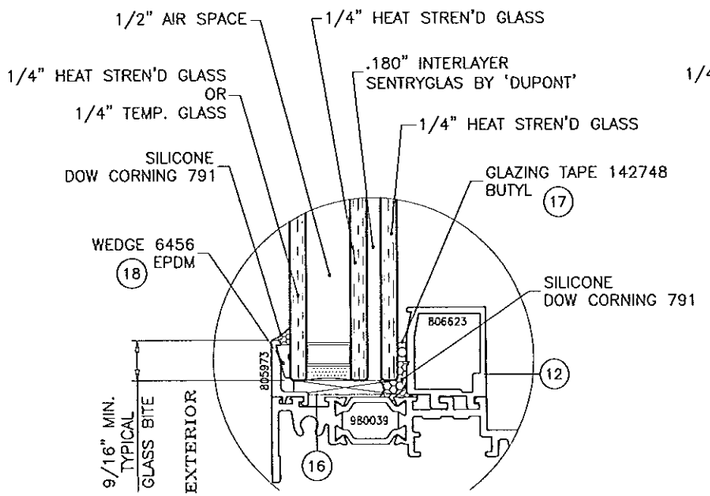

GLAZING DETAIL #1
AT FIXED LITE

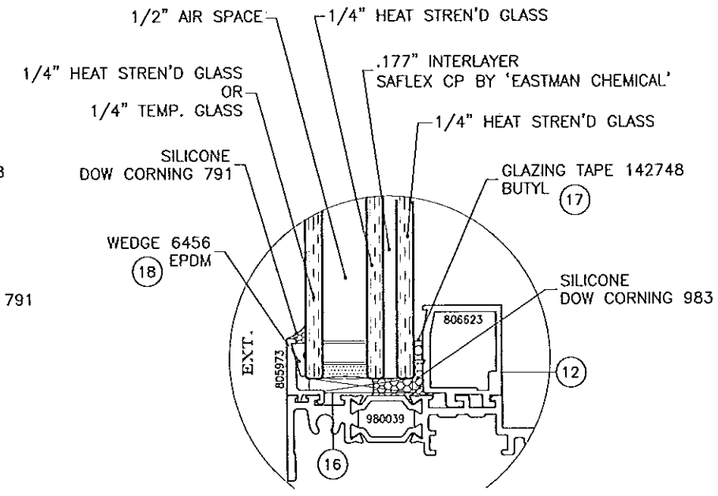

GLAZING DETAIL #2
AT FIXED LITE

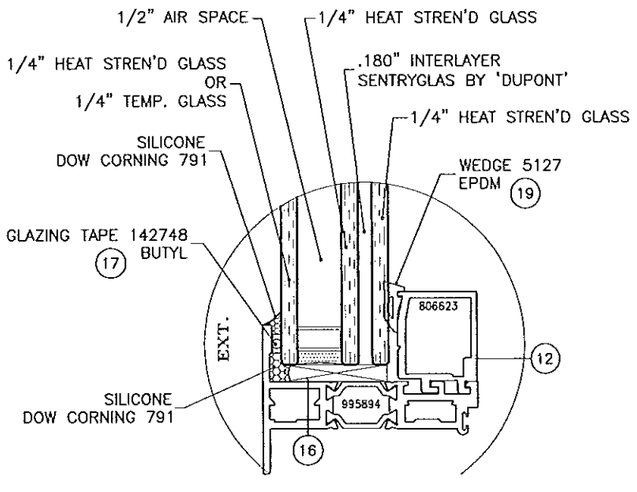

GLAZING METHOD #3

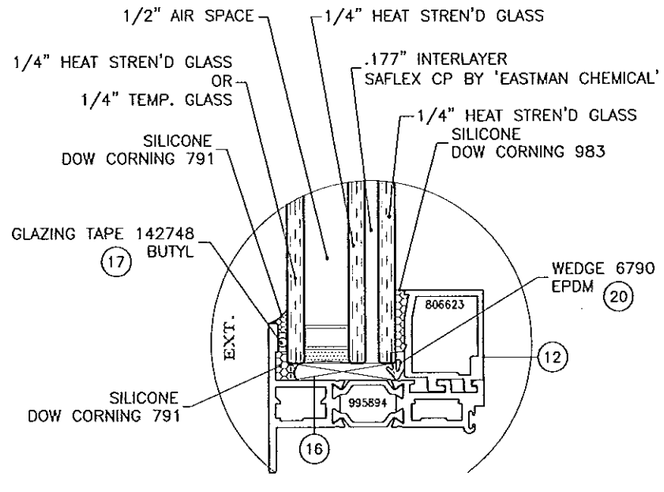

GLAZING METHOD #4

1/2" AIR SPACE CONSISTING OF:
SPACER:
ALUMINUM OR ST. STEEL BOX SPACER AROUND THE PERIMETER OF THE GLASS.
PRIMARY SEALANT:
POLYISOBUTYLENE BETWEEN GLASS & SPACER.
SECONDARY SEALANT:
SILICONE BETWEEN GLASS PLIES AND OUTER EDGES OF SPACER.

GLAZING DETAILS LEVEL 'E' IMPACT

1-7/16" OVERALL INSUL. LAM. GLASS

TO QUALIFY FOR SMALL MISSILE IMPACT RATING
EXTERIOR PLY OF INSUL. LAM. GLASS MUST BE TEMPERED.

Approved as complying with the
Florida Building Code
Date 04.3.14
NOA# 13-0917.04
Miami Dade Product Control
By

Engr: JAVAD AHMAD
CIVIL
FLA. PE # 70592
C.A.N. 3538

AL-FAROOQ CORPORATION
ENGINEERS & PRODUCT DEVELOPMENT
1235 S.W. 87 AVE
MIAMI, FLORIDA 33174
TEL. (305) 264-8100 FAX. (305) 262-6978
COMP-ANL\W13-29WW

Series 3-42501-HP-XLT P.O. Casement Wdw. (L.M.I.)

Wausau Window & Wall Systems,
Division Of Apogee Wausau Group, Inc.
7800 INTERNATIONAL DRIVE
WAUSAU, WI 54401
TEL. (715) 845-2161 FAX. (715) 843-4055

revisions:

no	date	by	description
A	12.24.13	RER	REV. PER COMMENTS
B	03.13.14		NO CHANGE THIS SHEET

date: 06-04-13
scale: 1/2" = 1"
dr. by: HAMID
chk. by:

drawing no.
W13-29

sheet 6 of 30

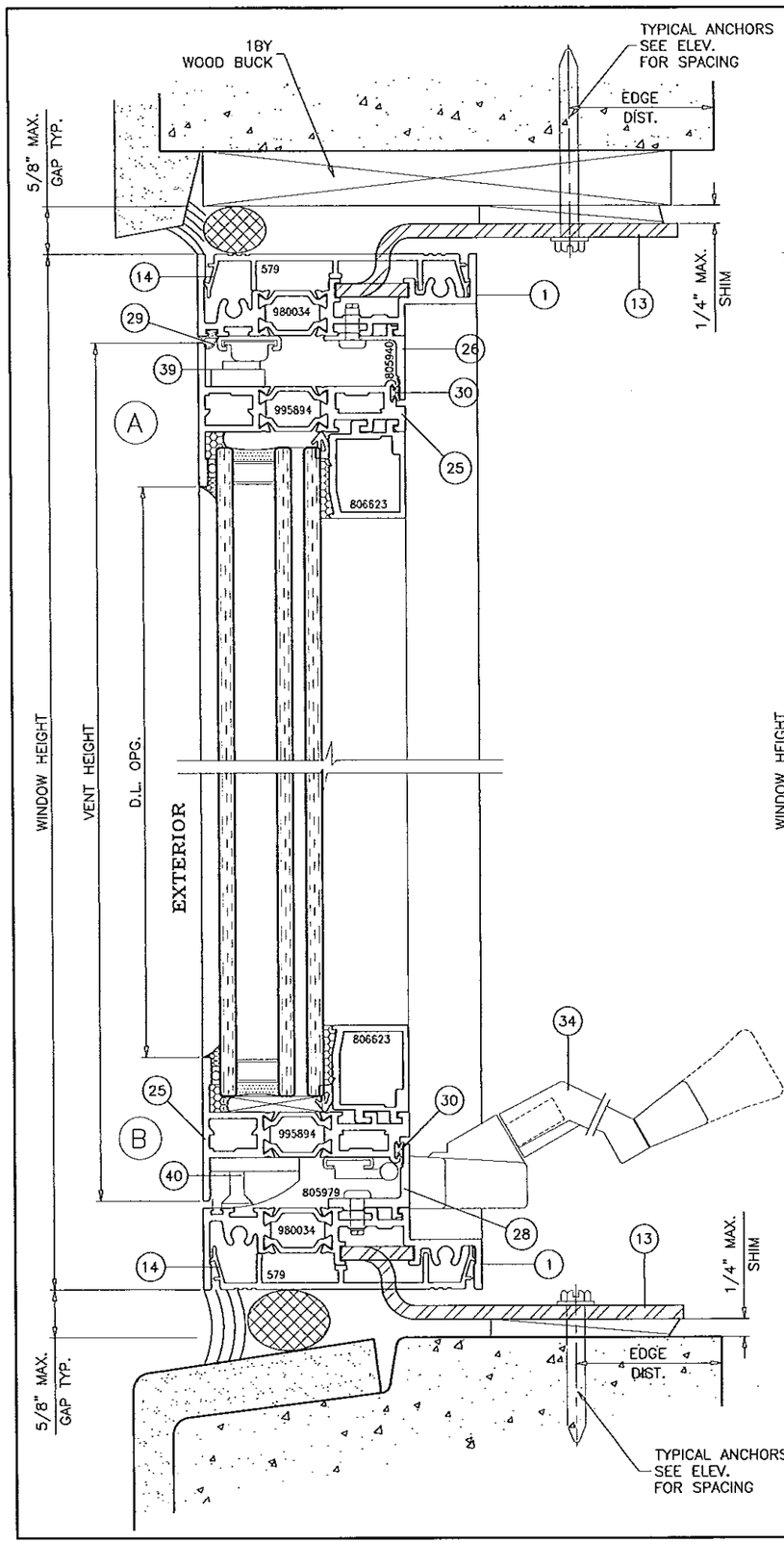

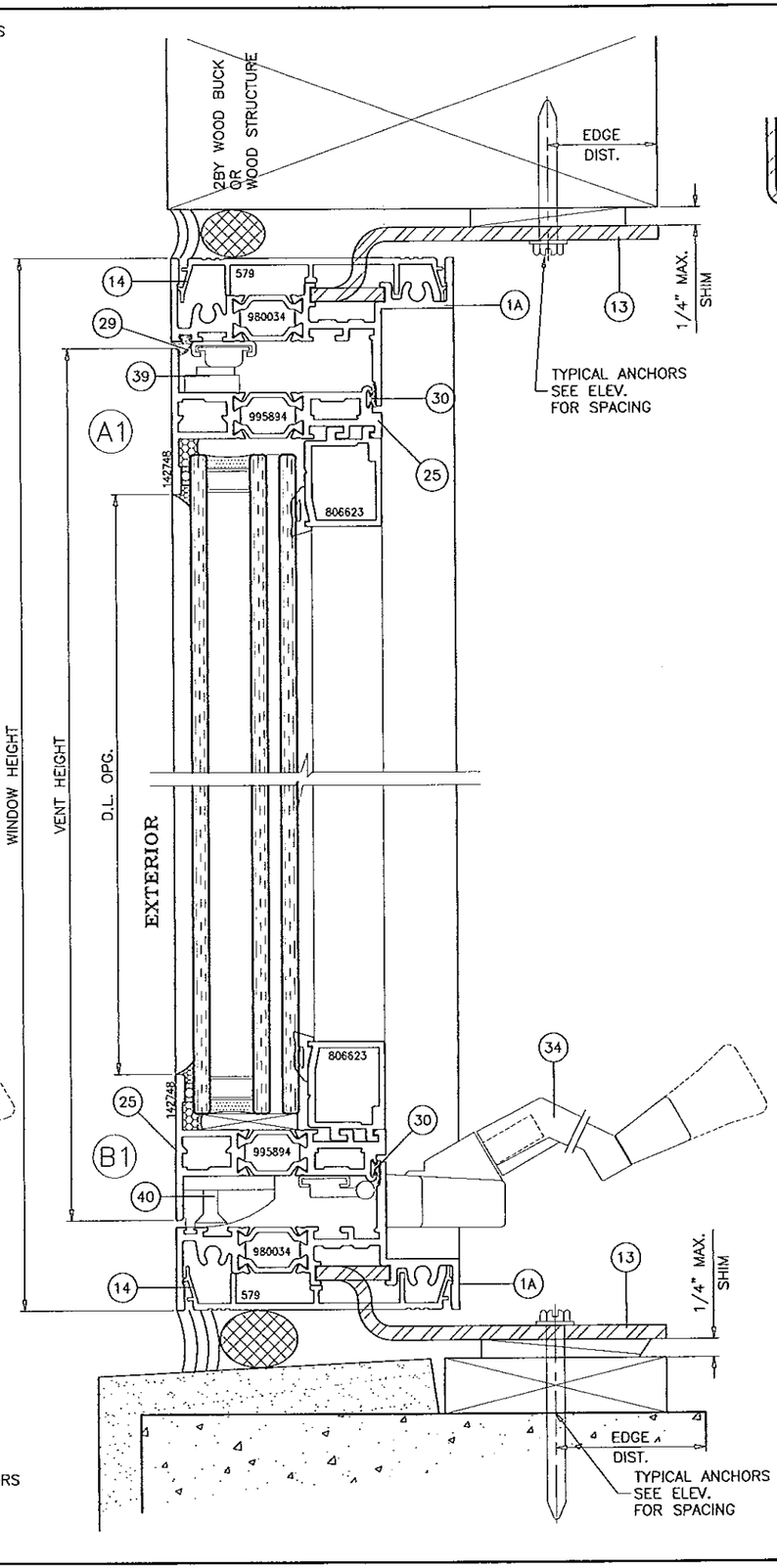

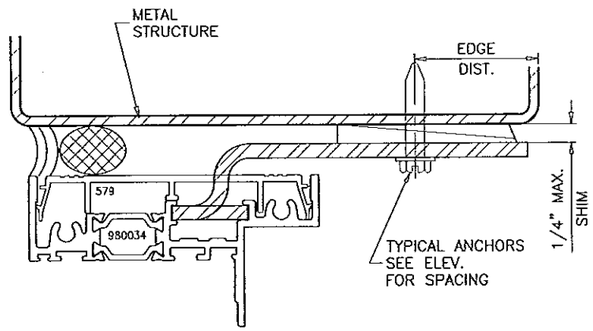

Approved as complying with the
Florida Building Code
Date 8/29/14
NOA# 13-0917.04
Miami Dade Product Control
By

SLIDE IN CLIPS AT FRAME ANCHORAGE DETAILS LEVEL 'D' & 'E' IMPACT

Engr: JAVAD AHMAD
CIVIL
FLA. PE # 70592
C.A.N. 3538

AL-FAROOQ CORPORATION
ENGINEERS & PRODUCT DEVELOPMENT
1235 S.W. 87 AVE
MIAMI, FLORIDA 33174
TEL. (305) 264-8100 FAX. (305) 262-6973

COMP-ANL\W13-29WW

Series 3-4250i-HP-XLT P.O. Casement Wdw. (L.M.I.)

Wausau Window & Wall Systems,
Division Of Apogee Wausau Group, Inc.
7800 INTERNATIONAL DRIVE
WAUSAU, WI 54401-2161
TEL. (715) 845-4055 FAX. (715) 843-4055

revisions:

no	date	by	description
A	12.24.13		REV. PER RER COMMENTS
B	03.13.14		NO CHANGE THIS SHEET

date: 06-04-13
scale: 1/2" = 1"
dr. by: HAMID
chk. by:

drawing no.
W13-29

sheet 7 of 30

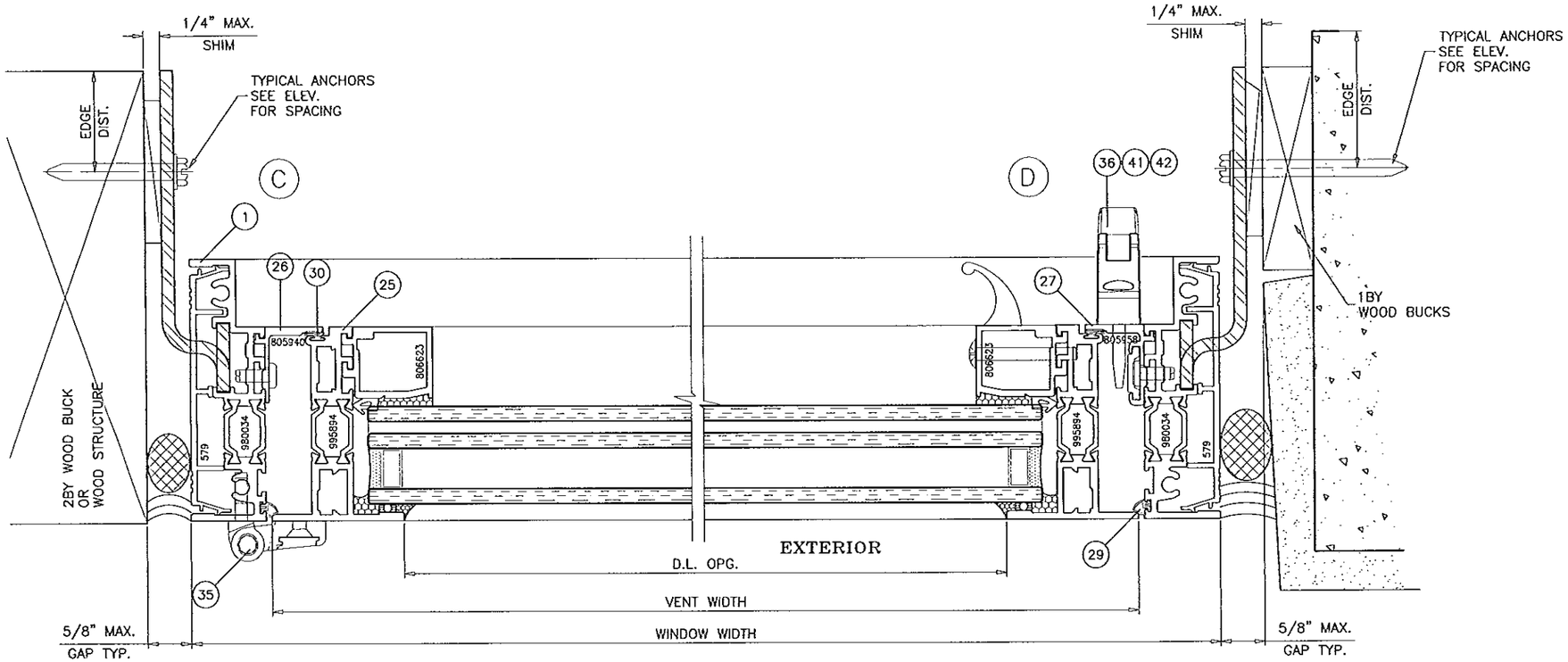

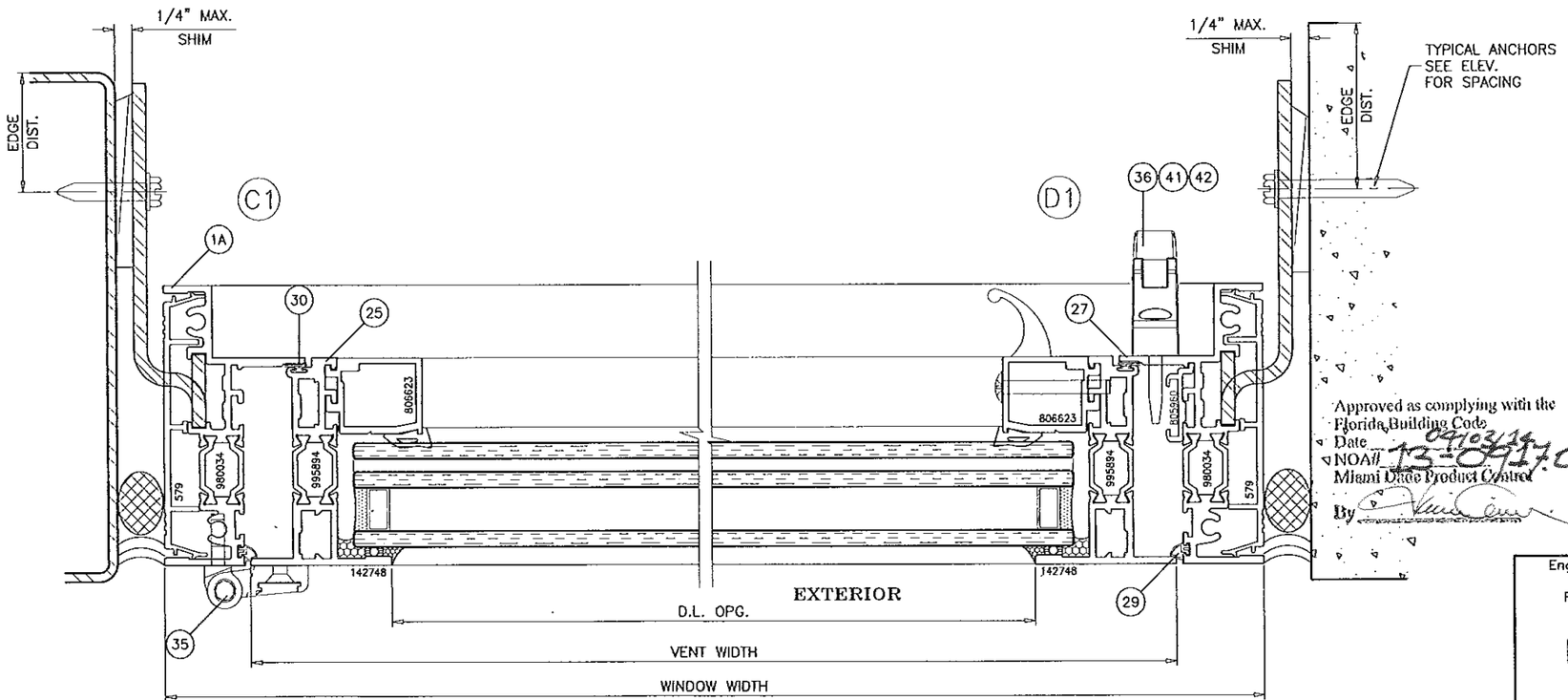

Approved as complying with the
Florida Building Code
Date 04/03/14
NOA# 13-0917.04
Miami Dade Product Control
By

SLIDE IN CLIPS AT FRAME
ANCHORAGE DETAILS
LEVEL 'D' & 'E' IMPACT

Engr: JAVAD AHMAD
CIVIL
FLA. PE # 70592
C.A.N. 3538

AL-FAROOQ CORPORATION
ENGINEERS & PRODUCT DEVELOPMENT
1235 S.W. 87 AVE
MIAMI, FLORIDA 33174
TEL. (305) 264-8100 FAX. (305) 262-6978

COMP-ANL\W13-29WW

Series 3-4250i-HP-XLT P.O. Casement Wdw. (L.M.I.)

Wausau Window & Wall Systems,
Division Of Apogee Wausau Group, Inc.
7800 INTERNATIONAL DRIVE
WAUSAU, WI 54401
TEL. (715) 845-2161 FAX. (715) 843-4055

revisions:

no	date	by	description
A	12.24.13		REV. PER RER COMMENTS
B	03.13.14		NO CHANGE THIS SHEET

date: 06-04-13
scale: 1/2" = 1"
dr. by: HAMID
chk. by:

drawing no.
W13-29

(E)

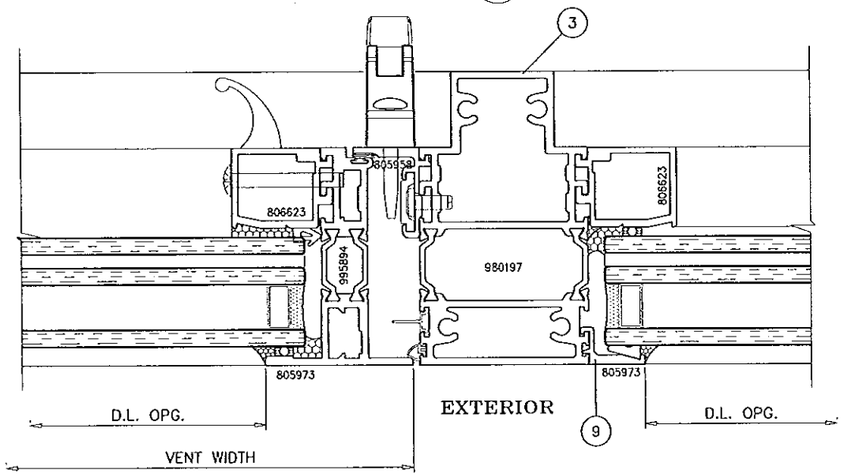

(F)

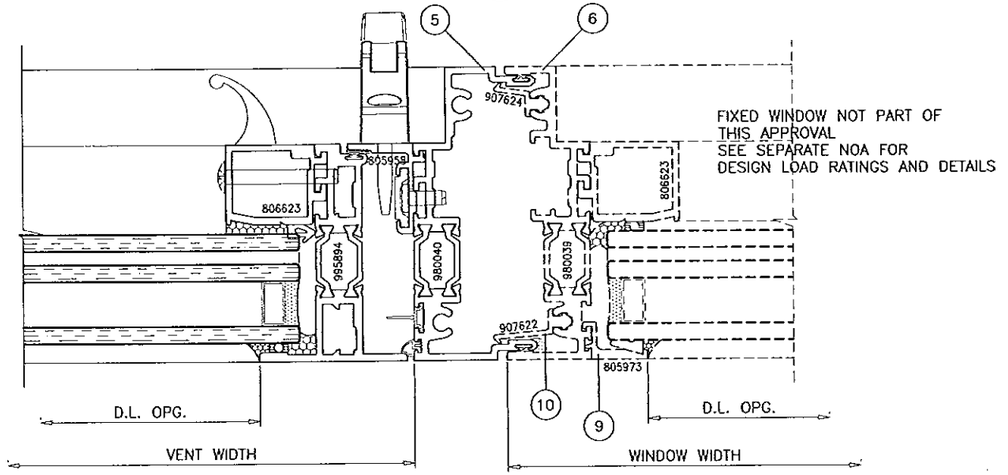

(E1)

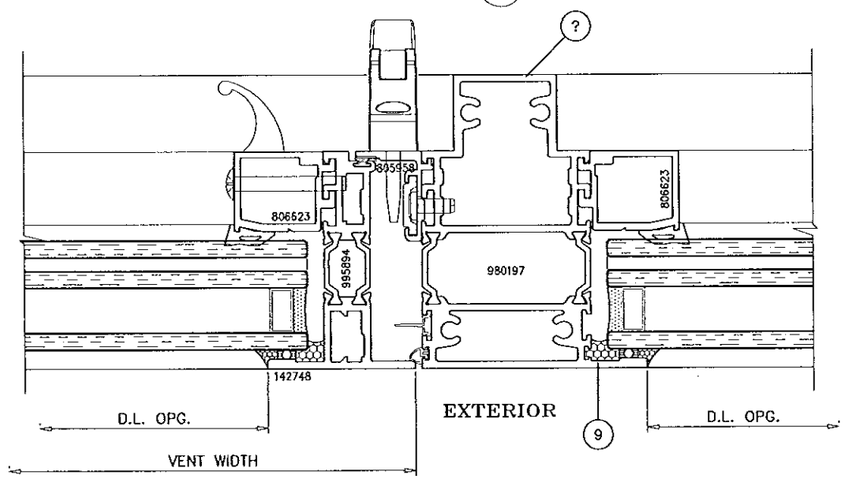

(F1)

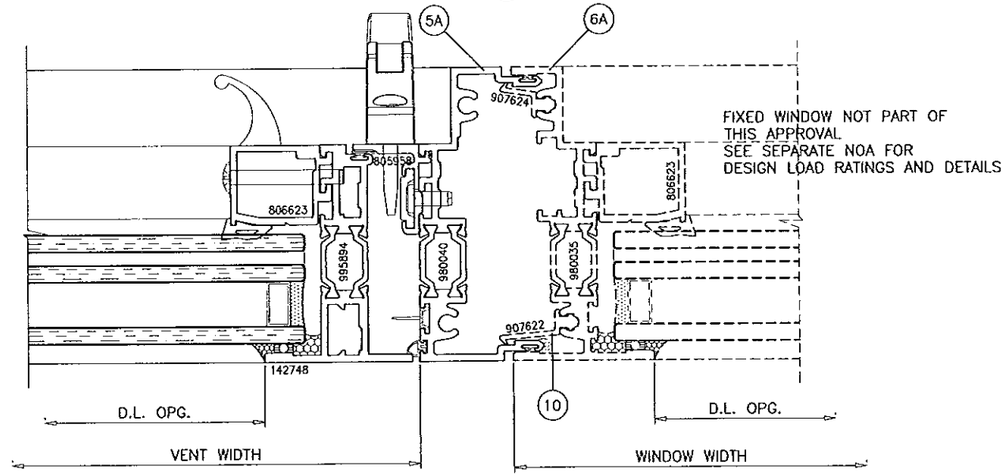

Approved as complying with the
Florida Building Code
Date 04/03/14
NOA# 13-0917.04
Miami Dade Product Control
By

Engr: JAVAD AHMAD
CIVIL
FLA. PE # 70592
C.A.N. 3538

AL-FAROOQ CORPORATION
ENGINEERS & PRODUCT DEVELOPMENT
1235 S.W. 87 AVE
MIAMI, FLORIDA 33174
TEL (305) 264-8100 FAX. (305) 262-6978
COMP-ANL\W13-29WW

Series 3-4250I-HP-XLT P.O. Casement Wdw. (L.M.I.)

Wausau Window & Wall Systems,
Division Of Apogee Wausau Group, Inc.
7800 INTERNATIONAL DRIVE
WAUSAU, WI 54401
TEL. (715) 845-2161 FAX. (715) 843-4055

revisions:

no	date	by	description
A	12.24.13		NO CHANGE THIS SHEET
B	03.13.14		REV. PER RER COMMENTS

date: 06-04-13
scale: 1/2" = 1"
dr. by: HAMID
chk. by:

drawing no.
W13-29

sheet 9 of 30

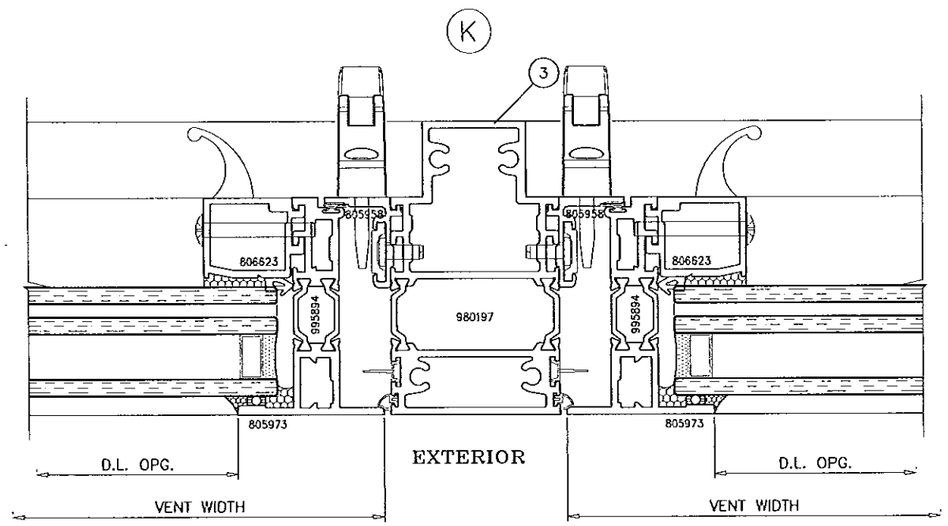

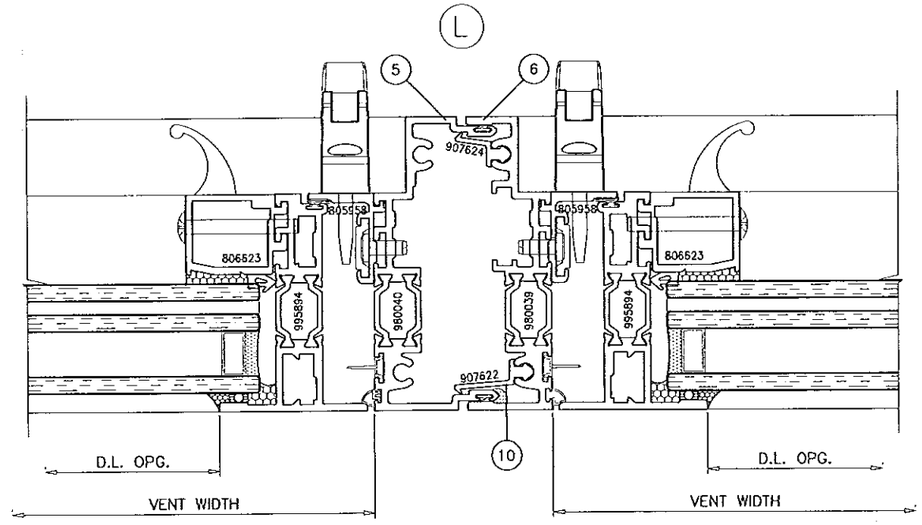

Approved as complying with the
Florida Building Code
Date 04/03/14
NOA# 13-0917.04
Miami Dade Product Control
By

Engr: JAVAD AHMAD
CIVIL
FLA. PE # 70592
C.A.N. 3538

AL-FAROOQ CORPORATION
ENGINEERS & PRODUCT DEVELOPMENT
1235 S.W. 87 AVE
MIAMI, FLORIDA 33174
TEL. (305) 264-8100 FAX. (305) 262-6978
COMP-ANL\W13-29WW

Series 3-4250i-HP-XLT P.O. Casement Wdw. (L.M.I.)

Wausau Window & Wall Systems,
Division Of Apogee Wausau Group, Inc.
7800 INTERNATIONAL DRIVE
WAUSAU, WI 54401
TEL. (715) 845-2161 FAX. (715) 843-4055

revisions:

no	date	by	description
A	12.24.13		NO CHANGE THIS SHEET
B	03.13.14		NO CHANGE THIS SHEET

date: 06-04-13
scale: 1/2" = 1"
dr. by: HAMID
chk. by:

drawing no.
W13-29

sheet 10 of 30

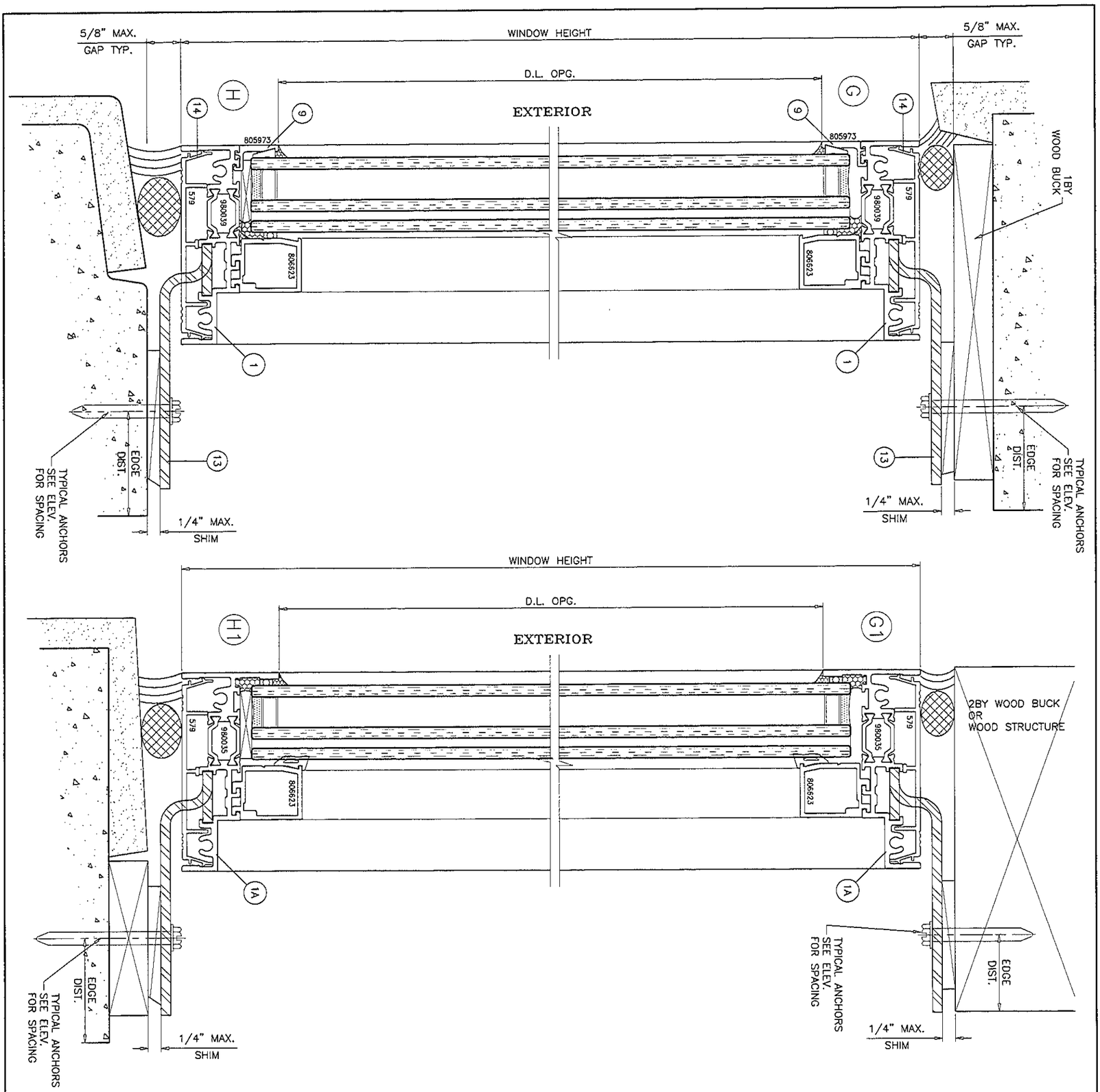

Engr: JAVAD AHMAD
CIVIL
FLA. PE # 70592
C.A.N. 3538

Approved as complying with the
Florida Building Code
Date
NOA# 13-0814.04
Miami-Dade Product Control

sheet 11 of 30	drawing no. W13–29	date: 06–04–13	scale: 1/2" = 1"	dr. by: HAMID	chk. by:

revisions:

no	date	by	description
A	12.24.13		REV. PER RER COMMENTS
B	03.13.14		NO CHANGE THIS SHEET

Series 3–4250i–HP–XLT P.O. Casement Wdw. (L.M.I.)

Wausau Window & Wall Systems,
Division Of Apogee Wausau Group, Inc.
7800 INTERNATIONAL DRIVE
WAUSAU, WI 54401
TEL. (715) 845–2161 FAX. (715) 843–4055

AL-FAROOQ CORPORATION
ENGINEERS & PRODUCT DEVELOPMENT
1235 S.W. 87 AVE
MIAMI, FLORIDA 33174
TEL. (305) 264-8100 FAX. (305) 262-6978

COMP–ANL\W13–29WW

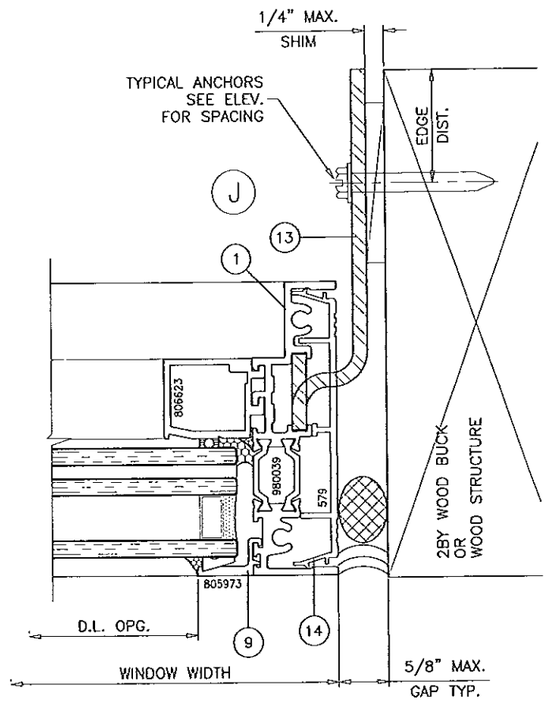

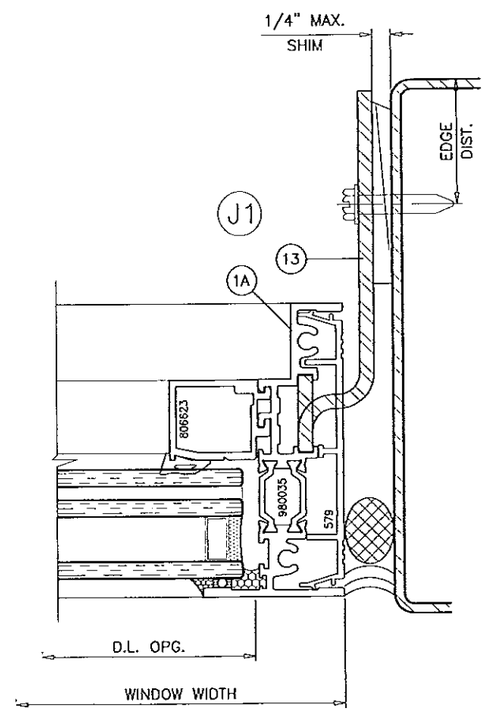

Approved as complying with the
Florida Building Code
Date 4/8/14
NOA# 13-0917.04
Miami-Dade Product Control
By

Engr: JAVAD AHMAD
CIVIL
FLA. PE # 70592
C.A.N. 3538

AL-FAROOQ CORPORATION
ENGINEERS & PRODUCT DEVELOPMENT
1235 S.W. 87 AVE
MIAMI, FLORIDA 33174
TEL. (305) 264-8100 FAX. (305) 262-6978
COMP-ANL\W13-29WW

Series 3-4250i-HP-XLT P.O. Casement Wdw. (L.M.I.)

Wausau Window & Wall Systems,
Division Of Apogee Wausau Group, Inc.
7800 INTERNATIONAL DRIVE
WAUSAU, WI 54401
TEL. (715) 845-2161 FAX. (715) 843-4055

revisions:

no	date	by	description
A	12.24.13		REV. PER RER COMMENTS
B	03.13.14		NO CHANGE THIS SHEET

date: 06-04-13
scale: 1/2" = 1"
dr. by: HAMID
chk. by:

drawing no.
W13-29

sheet 12 of 30

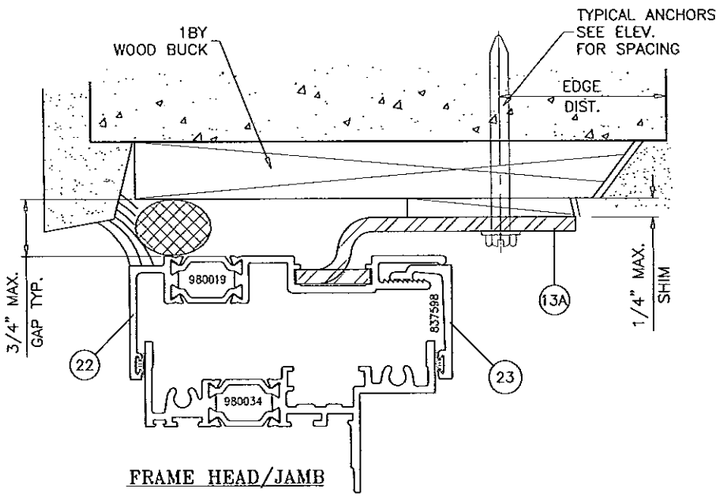

FRAME HEAD/JAMB

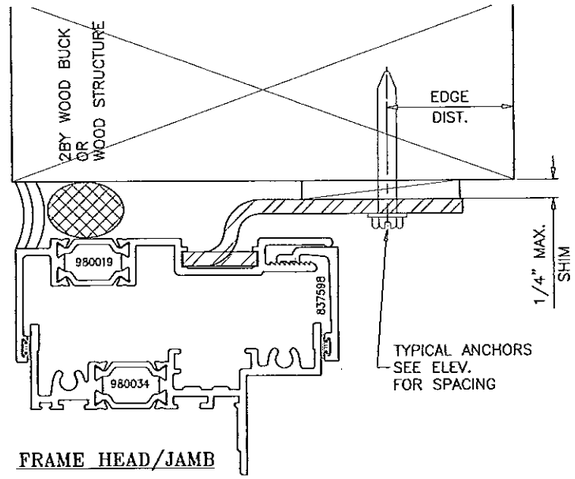

FRAME HEAD/JAMB

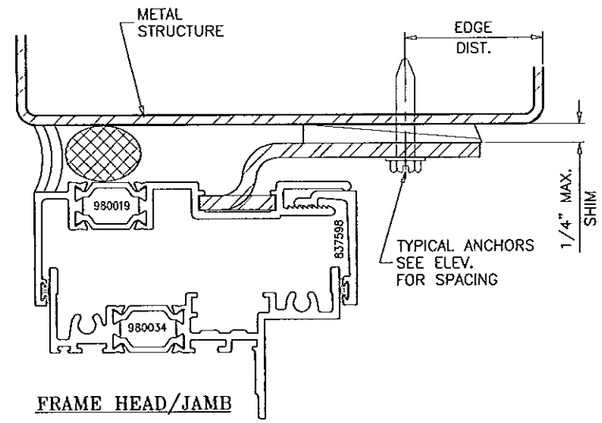

FRAME HEAD/JAMB

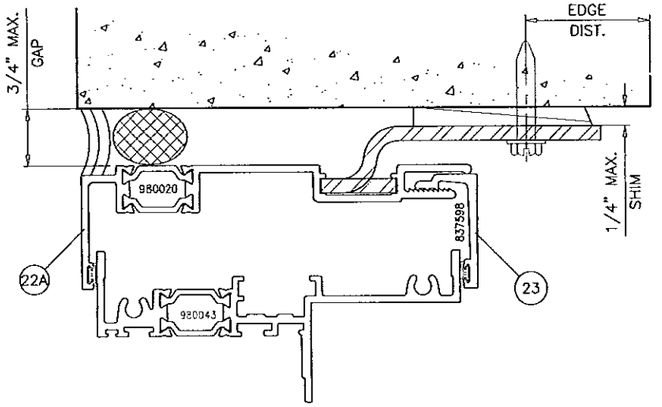

4250i SERIES FRAMES

DRAWING SHOWS SERIES 3250i FRAMES (3-1/2" DEEP). SERIES 4250i FRAMES WITH EXTENDED INTERIOR LEGS CAN ALSO BE USED AT ALL ANCHORAGE CONDITIONS.

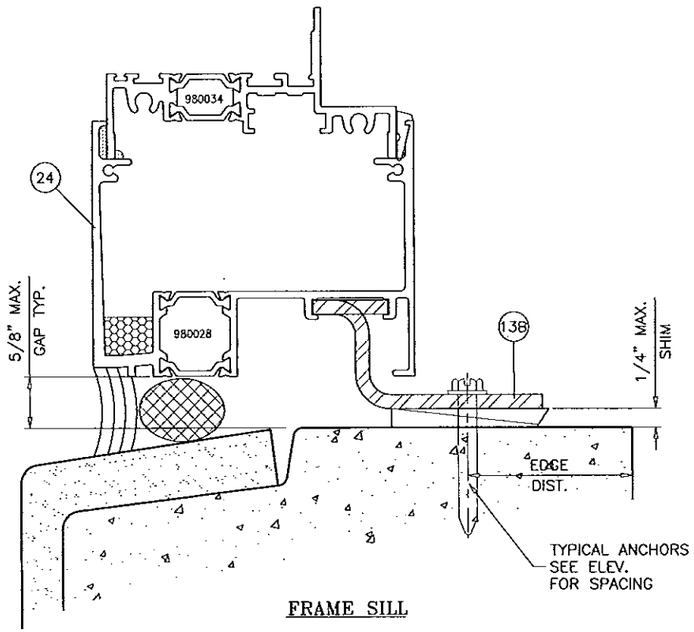

FRAME SILL

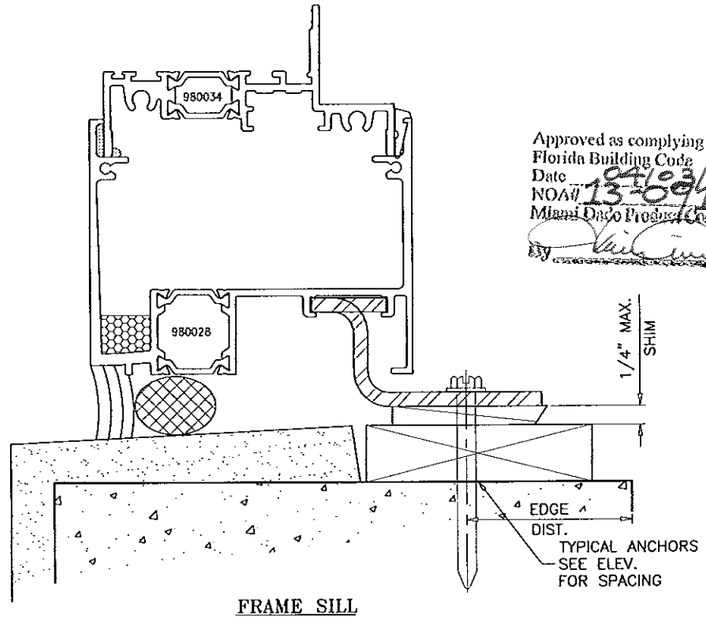

FRAME SILL

Approved as complying with the Florida Building Code
Date 4/08/14
NOA# 13-0917.04
Miami Dade Product Control
By

SLIDE IN CLIPS AT RECEPTOR ANCHORAGE DETAILS LEVEL 'D' IMPACT

Engr: JAVAD AHMAD
CIVIL
FLA. PE # 70592
C.A.N. 3538

AL-FAROOQ CORPORATION
ENGINEERS & PRODUCT DEVELOPMENT
1235 S.W. 87 AVE
MIAMI, FLORIDA 33174
TEL. (305) 264-8100 FAX. (305) 262-6978

COMP-ANL\W13-29WW

Series 3-4250i-HP-XLT P.O. Casement Wdw. (L.M.I.)

Wausau Window & Wall Systems,
Division Of Apogee Wausau Group, Inc.
7800 INTERNATIONAL DRIVE
WAUSAU, WI 54401
TEL. (715) 845-2161 FAX. (715) 843-4055

revisions:

no	date	by	description
A	12.24.13		REV. PER RER COMMENTS
B	03.13.14		REV. PER RER COMMENTS

date: 06-04-13
scale: 1/2" = 1"
dr. by: HAMID
chk. by:

drawing no.
W13-29

sheet 13 of 30

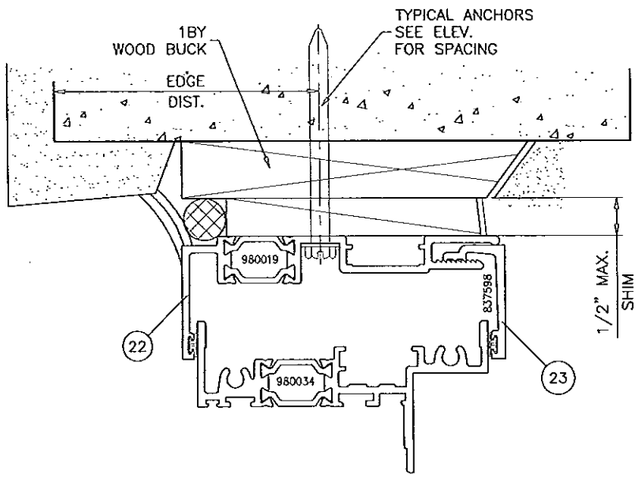

FRAME HEAD/JAMB

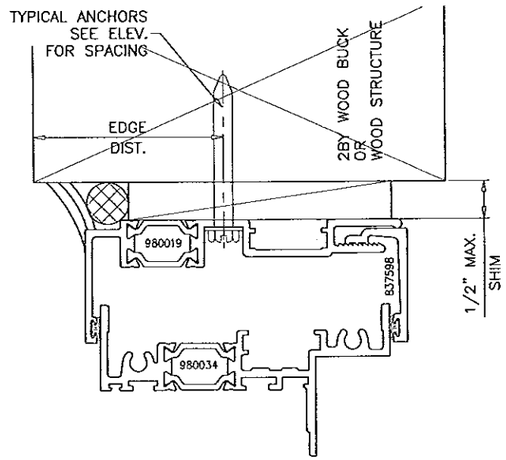

FRAME HEAD/JAMB

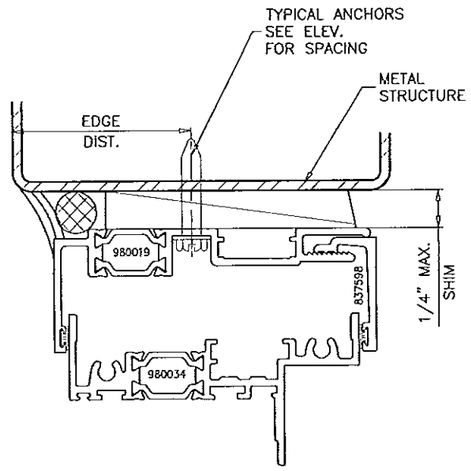

FRAME HEAD/JAMB

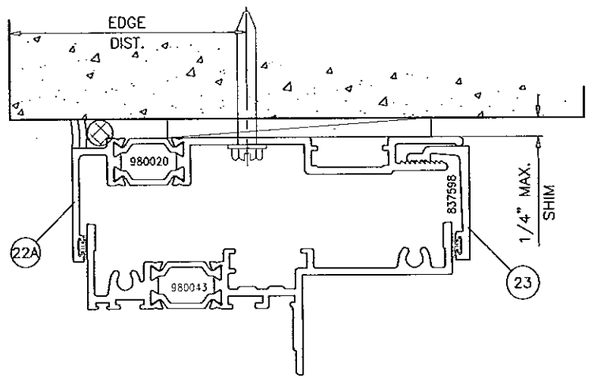

4250i SERIES FRAMES

DRAWING SHOWS SERIES 3250i FRAMES (3-1/2" DEEP). SERIES 4250i FRAMES WITH EXTENDED INTERIOR LEGS CAN ALSO BE USED AT ALL ANCHORAGE CONDITIONS.

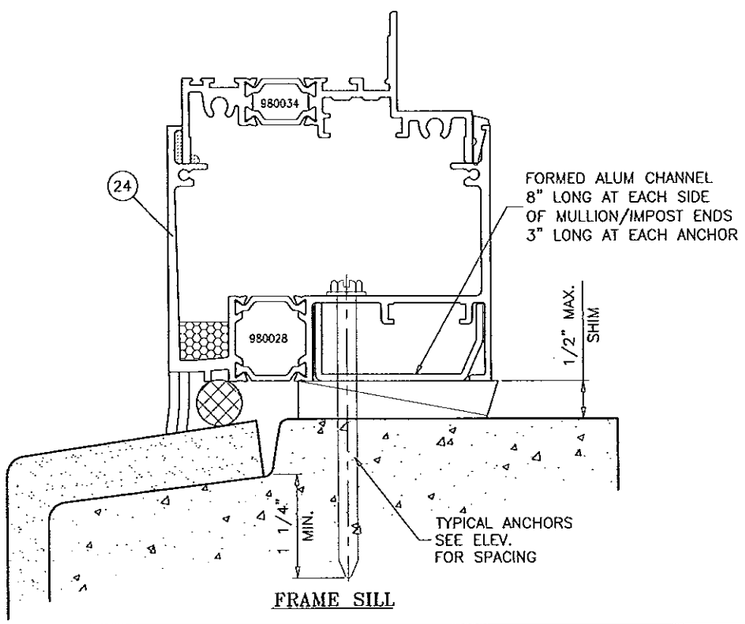

FRAME SILL

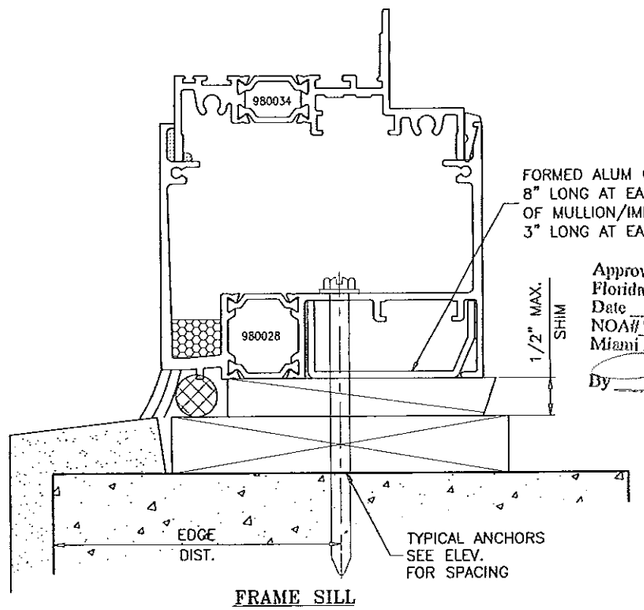

FRAME SILL

Approved as complying with the Florida Building Code
Date 04/03/14
NOA# 13-0911.04
Miami Dade Product Control
By

Engr: JAVAD AHMAD
CIVIL
FLA. PE # 70592
C.A.N. 3538

DIRECTLY THRU RECEPTOR ANCHORAGE DETAILS LEVEL 'D' IMPACT

AL-FAROOQ CORPORATION
ENGINEERS & PRODUCT DEVELOPMENT
1235 S.W. 87 AVE
MIAMI, FLORIDA 33174
TEL (305) 264-8100 FAX. (305) 262-6978

COMP-ANL\W13-29WW

Series 3-4250i-HP-XLT P.O. Casement Wdw. (L.M.I.)

Wausau Window & Wall Systems,
Division Of Apogee Wausau Group, Inc.
7800 INTERNATIONAL DRIVE
WAUSAU, WI 54401
TEL (715) 845-2161 FAX. (715) 843-4055

revisions:			
no	date	by	description
A	12.24.13		REV. PER RER COMMENTS
B	03.13.14		REV. PER RER COMMENTS

date: 06-04-13
scale: 1/2" = 1"
dr. by: HAMID
chk. by:

drawing no. W13-29

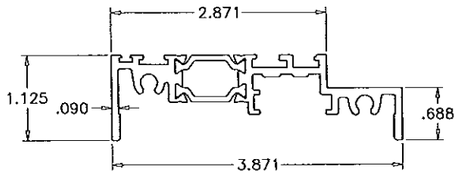

SERIES 3250i
FRAME HEAD/SILL/JAMB
980039

(1)

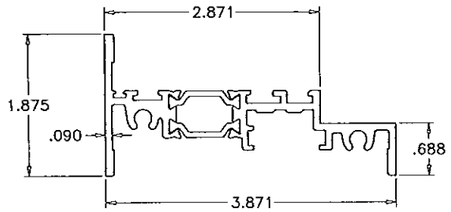

SERIES 3250i
ALT. FRAME HEAD/SILL/JAMB
980035

(1A)

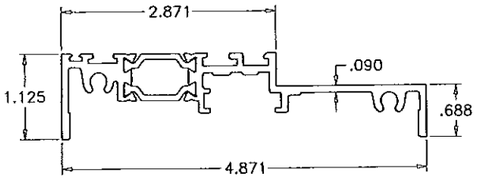

SERIES 4250i
FRAME HEAD/SILL/JAMB
980044

(2)

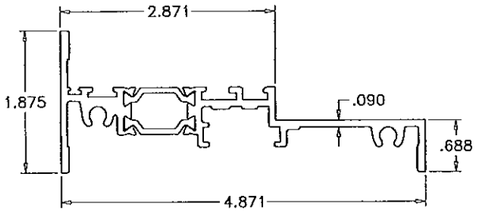

SERIES 4250i
ALT. FRAME HEAD/SILL/JAMB
995903

(2A)

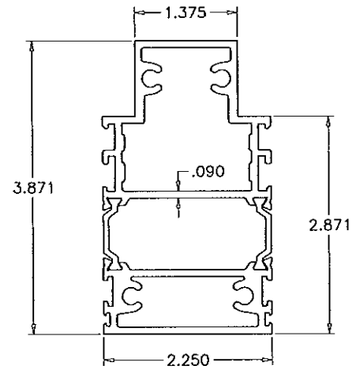

SERIES 3250i
IMPOST
980197

(3)

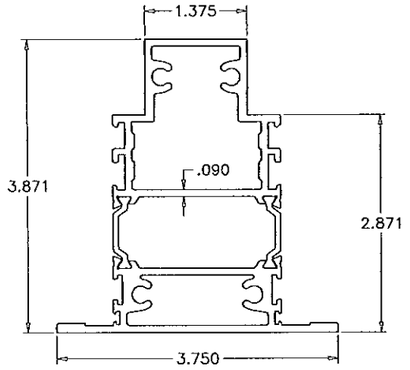

SERIES 3250i
ALT. IMPOST
980197

(3A)

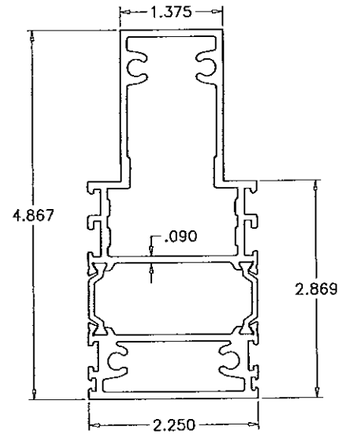

SERIES 4250i
IMPOST
980100

(4)

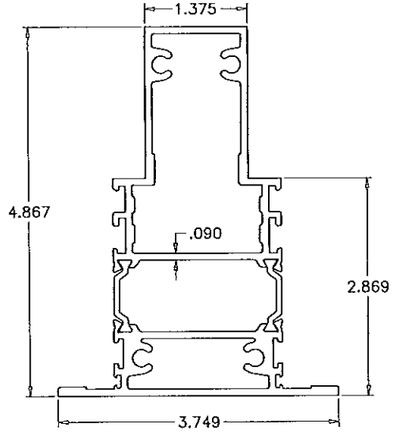

SERIES 4250i
ALT. IMPOST
980100

(4A)

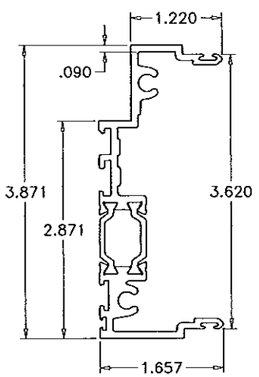

SERIES 3250i
MALE MULLION
980040

(5)

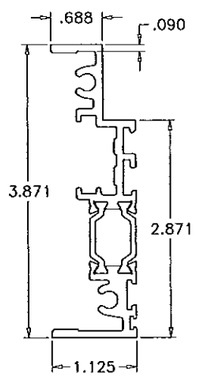

SERIES 3250i
FEMALE MULLION
980039

(6)

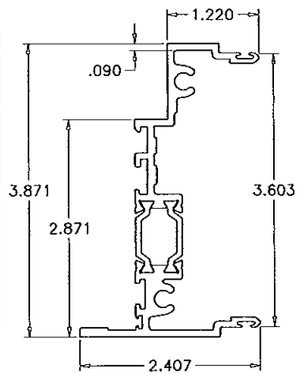

SERIES 3250i
ALT. MALE MULLION
980038

(5A)

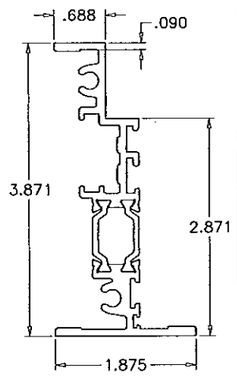

SERIES 3250i
ALT. FEMALE MULLION
980035

(6A)

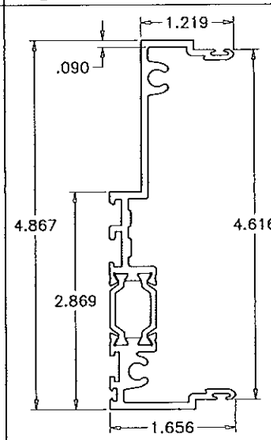

SERIES 4250i
MALE MULLION
980045

(7)

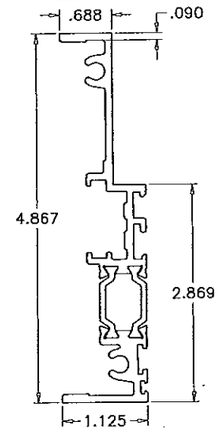

SERIES 4250i
FEMALE MULLION
980044

(8)

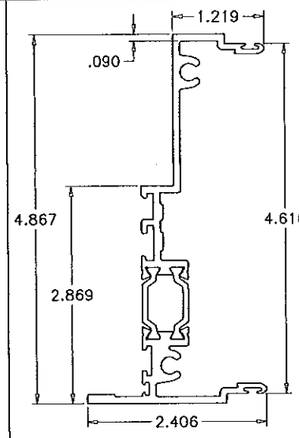

SERIES 4250i
ALT. MALE MULLION
980046

(7A)

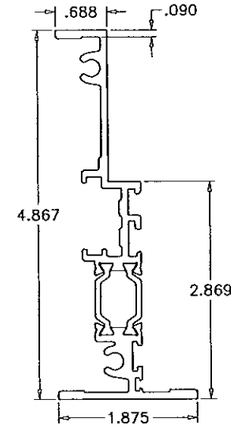

SERIES 4250i
ALT. FEMALE MULLION
995903

(8A)

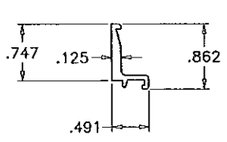

FRAME INSERT
805973

(9)

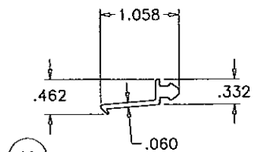

EXTERIOR MULLION INSERT
907622

(10)

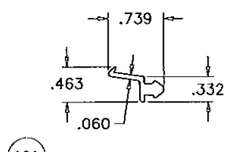

INTERIOR MULLION INSERT
907624

(10A)

CONTINUOUS POLYAMIDE NYLON THERMAL BARRIER
MECHANICALLY CRIMPED INTO CROSS KNURLED CAVITIES
BY 'TECHNOFORM BAUTEC'
DUROMETR 82±4 SHORE D
TYPICAL ALL FRAMES

Approved as complying with the
Florida Building Code
Date 04/03/14
NOA# 13-0911.04
Miami Dade Product Control
By

Engr: JAVAD AHMAD
CIVIL
FLA. PE # 70592
C.A.N. 3538

AL-FAROOQ CORPORATION
ENGINEERS & PRODUCT DEVELOPMENT
1235 S.W. 87 AVE
MIAMI, FLORIDA 33174
TEL. (305) 264-8100 FAX. (305) 262-6978

COMP-ANL\W13-29WW

Series 3-4250i-HP-XLT P.O. Casement Wdw. (L.M.I.)

Wausau Window & Wall Systems,
Division Of Apogee Wausau Group, Inc.
7800 INTERNATIONAL DRIVE
WAUSAU, WI 54401
TEL. (715) 845-2161 FAX. (715) 843-4055

revisions:

no	date	by	description
A	12.24.13	RER	REV. PER COMMENTS
B	03.13.14		NO CHANGE THIS SHEET

date: 06-04-13
scale: 1/2" = 1"
dr. by: HAMID
chk. by:

drawing no.
W13-29

sheet 15 of 30

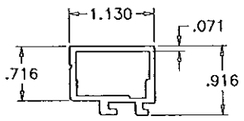

GLAZING BEAD
(LEVEL 'D' IMPACT)
805988

(11)

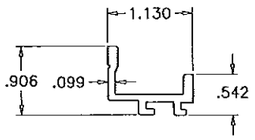

GLAZING BEAD
(LEVEL 'D' IMPACT)
805987

(11A)

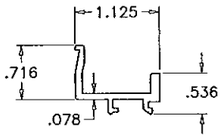

GLAZING BEAD
(LEVEL 'D' IMPACT)
805952

(11B)

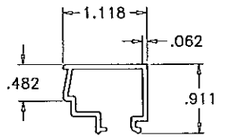

GLAZING BEAD
(LEVEL 'D' IMPACT)
805939

(11C)

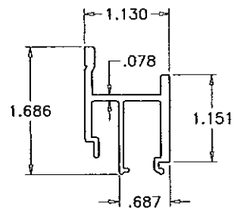

GLAZING BEAD
(LEVEL 'D' IMPACT)
806637

(11D)

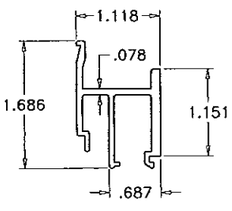

GLAZING BEAD
(LEVEL 'D' IMPACT)
805965

(11E)

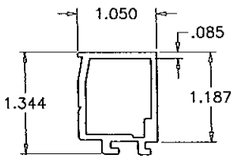

GLAZING BEAD
(LEVEL 'E' IMPACT)
806623

(12)

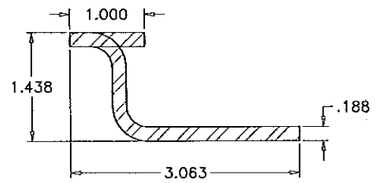

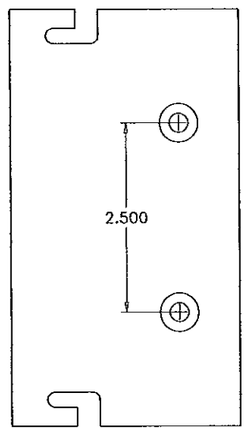

ANCHOR CLIP
LEVEL 'D' IMPACT
141860

(13B)

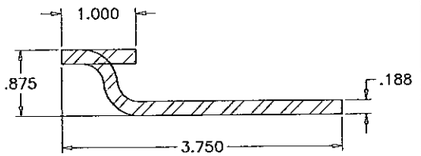

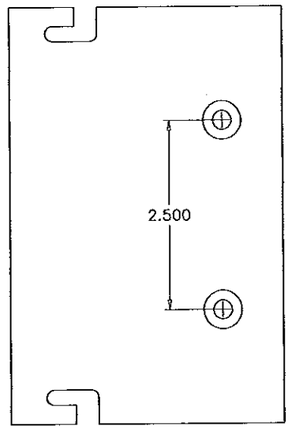

ANCHOR CLIP
LEVEL 'D' IMPACT
141860

(13A)

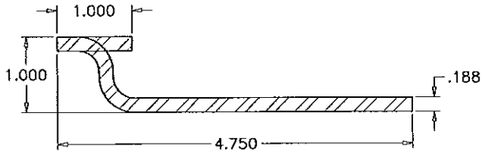

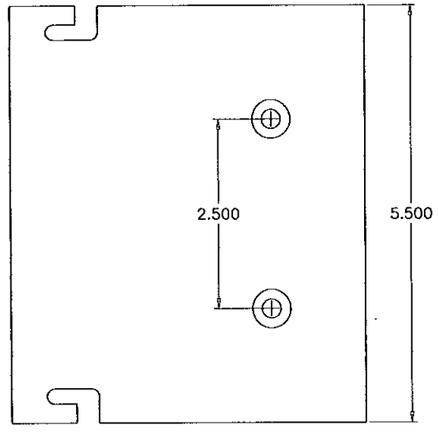

ANCHOR CLIP
LEVEL 'D' & 'E' IMPACT
141860

(13)

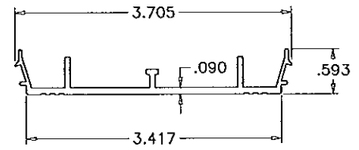

SERIES 3250i
CAULK BAR
579

(14)

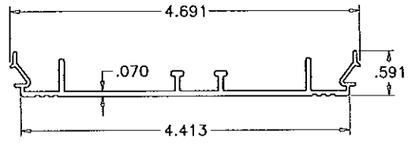

SERIES 4250i
CAULK BAR
573

(15)

Approved as complying with the
Florida Building Code
Date 04/03/14
NOA# 13-0917.04
Miami Dade Product Control
By

Engr: JAVAD AHMAD
CIVIL
FLA. PE # 70592
C.A.N. 3538

2014

AL-FAROOQ CORPORATION
ENGINEERS & PRODUCT DEVELOPMENT
1235 S.W. 87 AVE
MIAMI, FLORIDA 33174
TEL (305) 264-8100 FAX. (305) 262-6978

COMP-ANL\W13-29WW

Series 3-4250i-HP-XLT P.O. Casement Wdw. (L.M.I.)

Wausau Window & Wall Systems,
Division Of Apogee Wausau Group, Inc.
7800 INTERNATIONAL DRIVE
WAUSAU, WI 54401
TEL. (715) 845-2161 FAX. (715) 843-4055

revisions:

no	date	by	description
A	12.24.13		NO CHANGE THIS SHEET
B	03.13.14		NO CHANGE THIS SHEET

date: 06-04-13
scale: 1/2" = 1"
dr. by: HAMID
chk. by:

drawing no.
W13-29

sheet 16 of 30

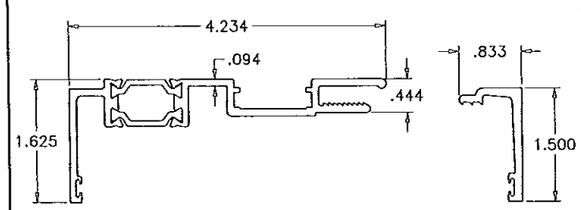

SERIES 3250i
RECEPTOR HEAD/JAMB
(LEVEL 'D' IMPACT)
(22) 980019

RECEPTOR INSERT
(LEVEL 'D' IMPACT)
(23) 837598

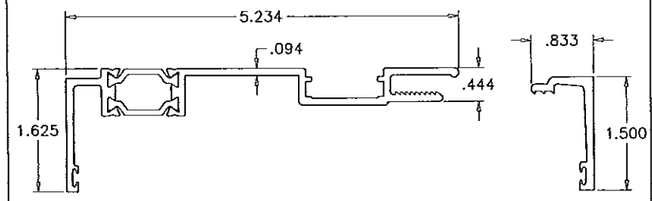

SERIES 4250i
RECEPTOR HEAD/JAMB
(LEVEL 'D' IMPACT)
(22A) 980020

RECEPTOR INSERT
(LEVEL 'D' IMPACT)
(23) 837598

CONTINUOUS POLYAMIDE NYLON THERMAL BARRIER
MECHANICALLY CRIMPED INTO CROSS KNURLED CAVITIES
BY 'TECHNOFORM BAUTEC'
DUROMETR 82±4 SHORE D
TYPICAL ALL FRAMES

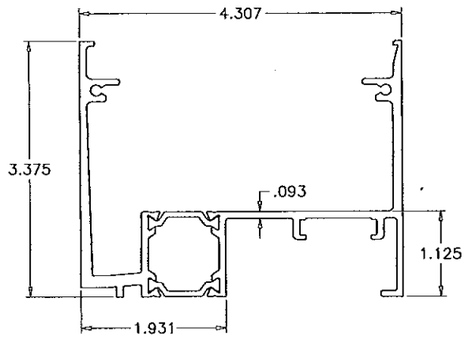

SERIES 3250i
RECEPTOR SILL
(LEVEL 'D' IMPACT)
APPR'D FOR WATER RESISTANCE
(24) 980028

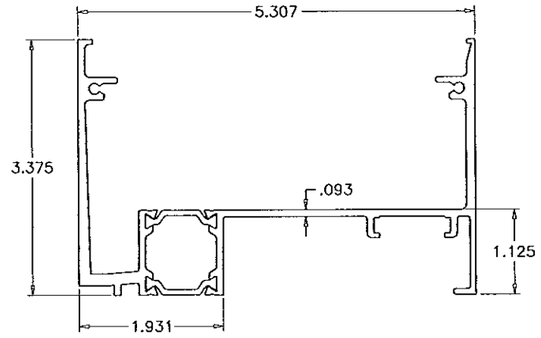

SERIES 4250i
RECEPTOR SILL
(LEVEL 'D' IMPACT)
APPR'D FOR WATER RESISTANCE
(24A) 980029

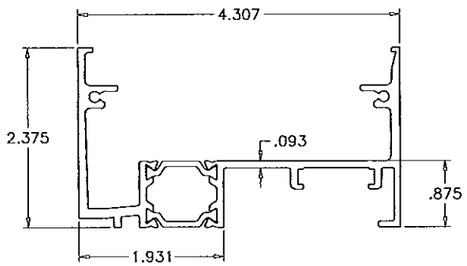

SERIES 3250i
RECEPTOR SILL
(LEVEL 'D' IMPACT)
NOT APPR'D FOR WATER RESISTANCE
(24.1) 980025

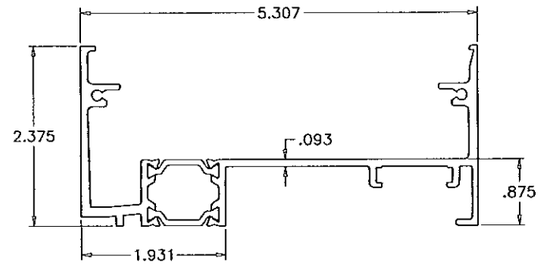

SERIES 4250i
RECEPTOR SILL
(LEVEL 'D' IMPACT)
NOT APPR'D FOR WATER RESISTANCE
(24.1A) 980026

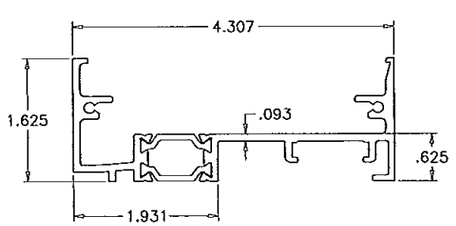

SERIES 3250i
RECEPTOR SILL
(LEVEL 'D' IMPACT)
NOT APPR'D FOR WATER RESISTANCE
(24.2) 980022

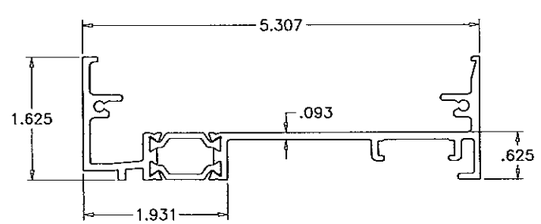

SERIES 4250i
RECEPTOR SILL
(LEVEL 'D' IMPACT)
NOT APPR'D FOR WATER RESISTANCE
(24.2A) 980023

Approved as complying with the
Florida Building Code
Date 04/03/14
NOA# 13-0917.04
Miami Dade Product Control
By

Engr: JAVAD AHMAD
CIVIL
FLA. PE # 70592
C.A.N. 3538

AL-FAROOQ CORPORATION
ENGINEERS & PRODUCT DEVELOPMENT
1235 S.W. 87 AVE
MIAMI, FLORIDA 33174
TEL (305) 264-8100 FAX. (305) 262-6978

COMP-ANL\W13-29WW

Series 3-4250i-HP-XLT P.O. Casement Wdw. (L.M.I.)

Wausau Window & Wall Systems,
Division Of Apogee Wausau Group, Inc.
7800 INTERNATIONAL DRIVE
WAUSAU, WI 54401
TEL. (715) 845-2161 FAX. (715) 843-4055

revisions:

no	date	by	description
A	12.24.13		REV. PER RER COMMENTS
B	03.13.14		NO CHANGE THIS SHEET

date: 06-04-13
scale: 1/2" = 1"
dr. by: HAMID
chk. by:

drawing no.
W13-29

sheet 17 of 30

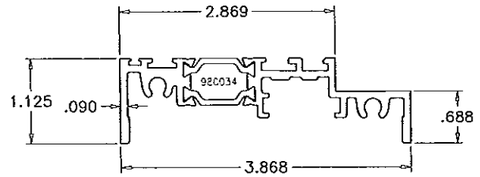

(50) SERIES 3250i
FRAME HEAD/SILL/JAMB
980034 (TRIMMED)

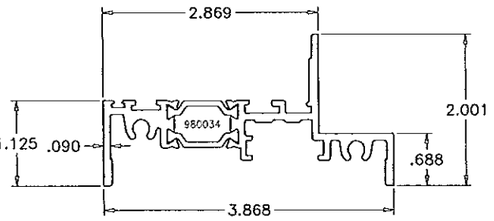

(50A) SERIES 3250i
ALT. FRAME HEAD/SILL/JAMB
980034

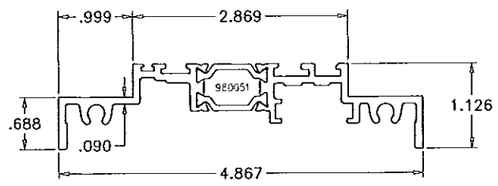

(51) SERIES 4250i
FRAME HEAD/SILL/JAMB
980051 (TRIMMED)

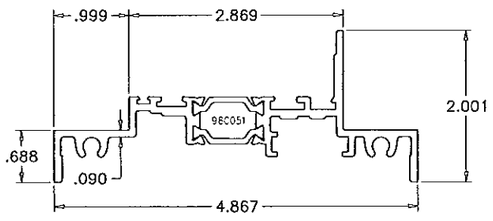

(51A) SERIES 4250i
ALT. FRAME HEAD/SILL/JAMB
980051

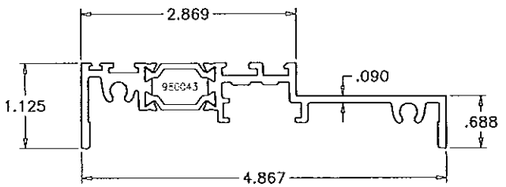

(50.1) SERIES 4250i
FRAME HEAD/SILL/JAMB
980043 (TRIMMED)

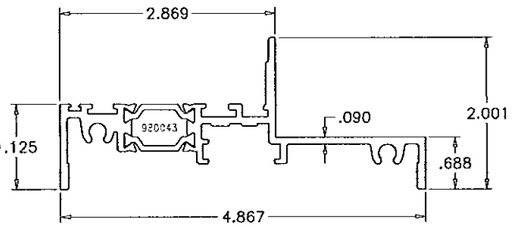

(50.1A) SERIES 4250i
ALT. FRAME HEAD/SILL/JAMB
980043

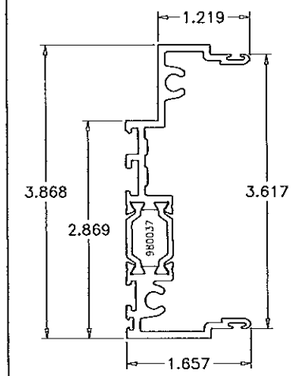

SERIES 3250i
ALT. MALE MULLION
980037 (TRIMMED)

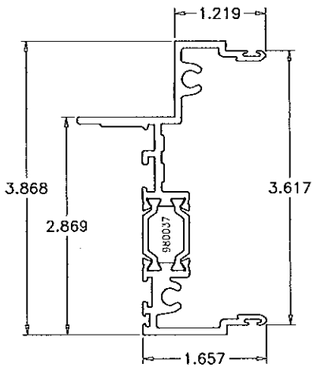

SERIES 3250i
ALT. MALE MULLION
980037

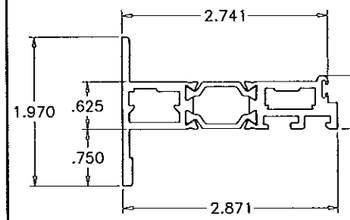

(25) CASEMENT VENT
995894

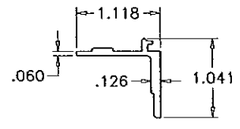

(26) CASEMENT INSERT
FRAME HEAD/HINGE JAMB
805940

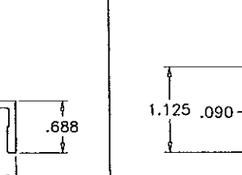

(27) CASEMENT INSERT
FRAME LOCK JAMB
805958

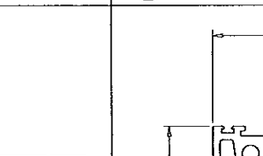

(28) CASEMENT INSERT
FRAME SILL
805979

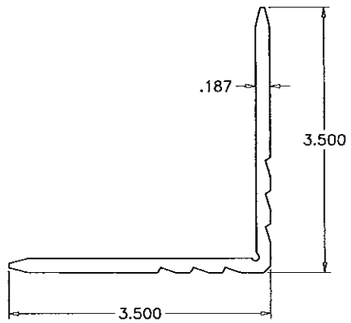

CORNER KEY
189564

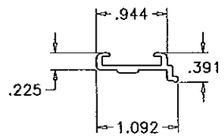

(–) MULTI-LOCK TRACK
805960

CONTINUOUS POLYAMIDE NYLON THERMAL BARRIER
MECHANICALLY CRIMPED INTO CROSS KNURLED CAVITIES
BY 'TECHNOFORM BAUTEC'
DUROMETR 82±4 SHORE D
TYPICAL ALL FRAMES

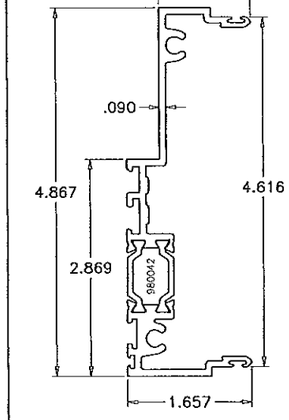

SERIES 4250i
ALT. MALE MULLION
980042 (TRIMMED)

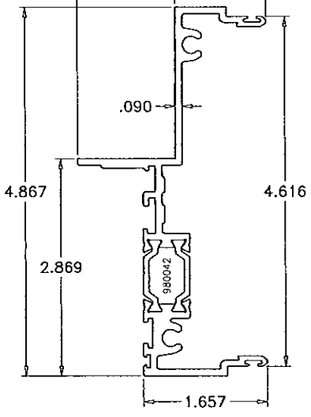

SERIES 4250i
ALT. MALE MULLION
980042

Approved as complying with the
Florida Building Code
Date 04/03/14
NOA# 13-0917.04
Miami-Dade Product Control
By

Engr: JAVAD AHMAD
CIVIL
FLA. PE. # 70592
C.A.N. 3538

AL-FAROOQ CORPORATION
ENGINEERS & PRODUCT DEVELOPMENT
1235 S.W. 87 AVE
MIAMI, FLORIDA 33174
TEL (305) 264-8100 FAX (305) 262-6978

COMP-ANL\W13-29WW

Series 3-4250i-HP-XLT P.O. Casement Wdw. (L.M.I.)

Wausau Window & Wall Systems,
Division Of Apogee Wausau Group, Inc.
7800 INTERNATIONAL DRIVE
WAUSAU, WI 54401
TEL. (715) 845-2161 FAX. (715) 843-4055

revisions:

no	date	by	description
A	12.24.13		REV. PER RER COMMENTS
B	03.13.14		NO CHANGE THIS SHEET

date: 06-04-13
scale: 1/2" = 1"
dr. by: HAMID
chk. by:

drawing no.
W13-29

ITEM	PART #	QUANTITY	DESCRIPTION	MATERIAL	MANF./SUPPLIER/REMARKS
1	980039	4	FRAME HEAD/SILL/JAMB	6063-T6	3250i SERIES
1A	980035	4	FRAME HEAD/SILL/JAMB	6063-T6	3250i SERIES
1.1	980041	1	OPTIONAL FRAME SILL	6063-T6	3250i SERIES
1.1A	995905	1	OPTIONAL FRAME SILL	6063-T6	4250i SERIES
2	980044	4	FRAME HEAD/SILL/JAMB	6063-T6	4250i SERIES
2A	995903	4	FRAME HEAD/SILL/JAMB	6063-T6	4250i SERIES
2.1	980053	4	FRAME HEAD/SILL/JAMB	6063-T6	4250i-OS SERIES
2.1A	980055	4	FRAME HEAD/SILL/JAMB	6063-T6	4250i-OS SERIES
2.2	980139	4	FRAME HEAD/SILL/JAMB	6063-T6	4250i-SDH SERIES
2.2A	980136	4	FRAME HEAD/SILL/JAMB	6063-T6	4250i-SDH SERIES
3	980197	AS REQD.	IMPOST	6063-T6	3250i SERIES
3A	980197	AS REQD.	ALT. IMPOST	6063-T6	3250i SERIES
4	980100	AS REQD.	IMPOST	6063-T6	4250i SERIES
4A	980100	AS REQD.	ALT. IMPOST	6063-T6	4250i SERIES
4.1	980168	AS REQD.	IMPOST	6063-T6	4250i-OS SERIES
4.1A	980168	AS REQD.	ALT. IMPOST	6063-T6	4250i-OS SERIES
4.2	–	AS REQD.	IMPOST	6063-T6	4250i-SDH SERIES
4.2A	–	AS REQD.	ALT. IMPOST	6063-T6	4250i-SDH SERIES
5	980040	AS REQD.	MALE MULLION	6063-T6	3250i SERIES
5A	980038	AS REQD.	ALT. MALE MULLION	6063-T6	3250i SERIES
6	980039	AS REQD.	FEMALE MULLION	6063-T6	3250i SERIES
6A	980035	AS REQD.	ALT. FEMALE MULLION	6063-T6	3250i SERIES
7	980045	AS REQD.	MALE MULLION	6063-T6	4250i SERIES
7A	980046	AS REQD.	ALT. MALE MULLION	6063-T6	4250i SERIES
7.1	980052	AS REQD.	MALE MULLION	6063-T6	4250i-OS SERIES
7.1A	980054	AS REQD.	ALT. MALE MULLION	6063-T6	4250i-OS SERIES
7.2	980134	AS REQD.	MALE MULLION	6063-T6	4250i-SDH SERIES
7.2A	980137	AS REQD.	ALT. MALE MULLION	6063-T6	4250i-SDH SERIES
8	980044	AS REQD.	FEMALE MULLION	6063-T6	4250i SERIES
8A	995903	AS REQD.	ALT. FEMALE MULLION	6063-T6	4250i SERIES
9	805973	AS REQD.	FRAME INSERT	6063-T6	3250i & 4250i SERIES
10	907622	AS REQD.	EXTERIOR MULLION INSERT	6063-T6	3250i & 4250i SERIES
10A	907624	AS REQD.	INTERIOR MULLION INSERT	6063-T6	3250i & 4250i SERIES
11	805988	4	GLAZING BEAD, LEVEL 'D' IMPACT	6063-T6	3250i & 4250i SERIES
11A	805987	4	ALT. GLAZING BEAD, LEVEL 'D' IMPACT	6063-T6	3250i & 4250i SERIES
11B	805952	4	ALT. GLAZING BEAD, LEVEL 'D' IMPACT	6063-T6	3250i & 4250i SERIES
11C	805939	4	ALT. GLAZING BEAD, LEVEL 'D' IMPACT	6063-T6	3250i & 4250i SERIES
11D	806637	4	ALT. GLAZING BEAD, LEVEL 'D' IMPACT	6063-T6	3250i & 4250i SERIES
11E	805965	4	ALT. GLAZING BEAD, LEVEL 'D' IMPACT	6063-T6	3250i & 4250i SERIES
12	806623	4	GLAZING BEAD, LEVEL 'E' IMPACT	6063-T6	3250i & 4250i SERIES
13	141860	AS REQD.	ANCHOR CLIP (LEVEL 'D' & 'E' IMPACT)	STEEL	3250i & 4250i SERIES
13A	141860	AS REQD.	ANCHOR CLIP (LEVEL 'D' IMPACT)	STEEL	3250i & 4250i SERIES
13B	141860	AS REQD.	ANCHOR CLIP (LEVEL 'D' IMPACT)	STEEL	3250i & 4250i SERIES
14	579	AS REQD.	CAULK BAR	PVC	3250i SERIES
15	573	AS REQD.	CAULK BAR	PVC	4250i SERIES
16	144475	2/ LITE	SETTING BLOCK	SILICONE	DUROMETER 70±5, SHORE A
17	142748	AS REQD.	INTERIOR & EXTERIOR GALZING TAPE	BUTYL	–
18	6456	AS REQD.	INTERIOR & EXTERIOR WEDGE GASKET	EPDM	DUROMETER 85±5, SHORE A
19	5127	AS REQD.	INTERIOR WEDGE GASKET	EPDM	DUROMETER 85±5, SHORE A
20	6790	AS REQD.	INTERIOR WEDGE GASKET	SILICONE	DUROMETER 70±5, SHORE A
21	21355	AS REQD.	ASSEMBLY SCREWS	ST. STEEL	PH SMS
22	980019	AS REQD.	RECEPTOR HEAD/JAMB (LEVEL 'D' IMPACT)	6063-T6	3250i SERIES
22A	980020	AS REQD.	RECEPTOR HEAD/JAMB (LEVEL 'D' IMPACT)	6063-T6	4250i SERIES
23	837598	AS REQD.	RECEPTOR INSERT (LEVEL 'D' IMPACT)	6063-T6	–
24	980028	AS REQD.	RECEPTOR SILL, 3-3/8" HIGH (LEVEL 'D' IMPACT)	6063-T6	3250i SERIES
24A	980029	AS REQD.	RECEPTOR SILL, 3-3/8" HIGH (LEVEL 'D' IMPACT)	6063-T6	4250i SERIES
24.1	980025	AS REQD.	RECEPTOR SILL, 2-3/8" HIGH (LEVEL 'D' IMPACT)	6063-T6	3250i SERIES
24.1A	980026	AS REQD.	RECEPTOR SILL, 2-3/8" HIGH (LEVEL 'D' IMPACT)	6063-T6	4250i SERIES
24.2	980022	AS REQD.	RECEPTOR SILL, 1-5/8" HIGH (LEVEL 'D' IMPACT)	6063-T6	3250i SERIES
24.2A	980023	AS REQD.	RECEPTOR SILL, 1-5/8" HIGH (LEVEL 'D' IMPACT)	6063-T6	4250i SERIES
25	995894	4/ VENT	CASEMENT VENT	6063-T6	–
26	805940	AS REQD.	FRAME INSERT AT HEAD/HINGE JAMB	6063-T6	–
27	805958	AS REQD.	FRAME INSERT AT LOCK JAMB	6063-T6	–
28	805979	AS REQD.	FRAME INSERT AT SILL	6063-T6	–
29	6039	AS REQD.	BULB W'STRIPPING AT EXTERIOR	VINYL	ULTRAFAB
30	6040	AS REQD.	BULB W'STRIPPING AT INTERIOR	VINYL	ULTRAFAB
31	140121	AS REQD.	JAMB WEATHER SEAL	PVC/VINYL	ALPHA PLASTICS
35	***	AS REQD.	ROTO OPERATOR	–	TRUTH HARDWARE
35	CLI 104800.215	AS REQD.	SURFACE MOUNT BUTT HINGES, AT 40" O.C. MAX.	6063-T6	CALDWELL MANF.
36	CLI	–	LOCK/STRIKE PACKAGE, AT 50" O.C. MAX.	ST. STEEL	CALDWELL MANF.
37	8004	–	KB SLIDE RAIL, MULTI LOCK	POLYAMIDE	TECHNOFORM
38	CLR 100502.215	–	HANDLE, PULL	6063-T6	WWWS
39	CLR 100186	–	FRICTION ADJUSTER, 12", FA-33	ST. STEEL	TRUTH HARDWARE
40	CLR	–	P.O. LIFT BLOCK	–	WWWS
41	107211	1	MULTI-LOCK HANDLE COUPLER	–	CALDWELL MANF.
42	CLI 107215	–	MULTI-LOCK HANDLE	STEEL	CALDWELL MANF.
50	980034	4	FRAME HEAD/SILL/JAMB	6063-T6	3250i SERIES
50A	980034	4	FRAME HEAD/SILL/JAMB	6063-T6	3250i SERIES
50.1	980043	4	FRAME HEAD/SILL/JAMB	6063-T6	4250i SERIES
50.1A	980043	4	FRAME HEAD/SILL/JAMB	6063-T6	4250i SERIES
51	980051	4	FRAME HEAD/SILL/JAMB	6063-T6	4250i-OS SERIES
51A	980051	4	FRAME HEAD/SILL/JAMB	6063-T6	4250i-OS SERIES

*** CLR 106051 = 7.5" LEFT HAND
CLR 106049 = 7.5" RIGHT HAND
CLR 100629 = 9.5" LEFT HAND
CLR 100631 = 9.5" RIGHT HAND

SEALANTS:

ALL JOINTS AND FRAME CONNECTIONS SEALED WITH SILICONE OR ACRYLIC SEALANT.

Approved as complying with the Florida Building Code
Date 10/03/14
NOA# 13-0917.04
Miami Dade Product Control
By

Engr: JAVAD AHMAD
CIVIL
FLA. PE # 70592
C.A.N. 3538

AL-FAROOQ CORPORATION
ENGINEERS & PRODUCT DEVELOPMENT
1235 S.W. 87 AVE
MIAMI, FLORIDA 33174
TEL (305) 264-8100 FAX. (305) 262-6978

COMP-ANL\W13-29WW

Series 3-4250i-HP-XLT P.O. Casement Wdw. (L.M.I.)

Wausau Window & Wall Systems,
Division Of Apogee Wausau Group, Inc.
7800 INTERNATIONAL DRIVE
WAUSAU, WI 54401
TEL. (715) 845-2161 FAX. (715) 843-4055

revisions:

no	date	by	description
A	12.24.13		NO CHANGE THIS SHEET
B	03.13.14		REV. PER RER COMMENTS

date: 06-04-13
scale: 1/2" = 1"
dr. by: HAMID
chk. by:

drawing no.
W13-29

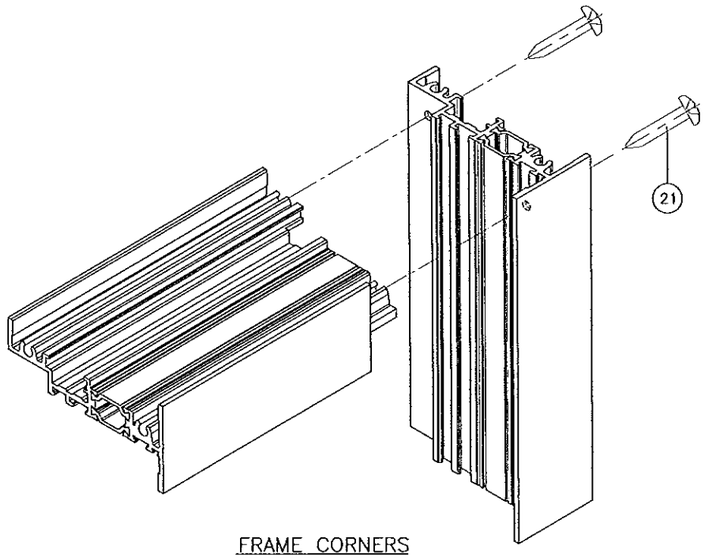

FRAME CORNERS

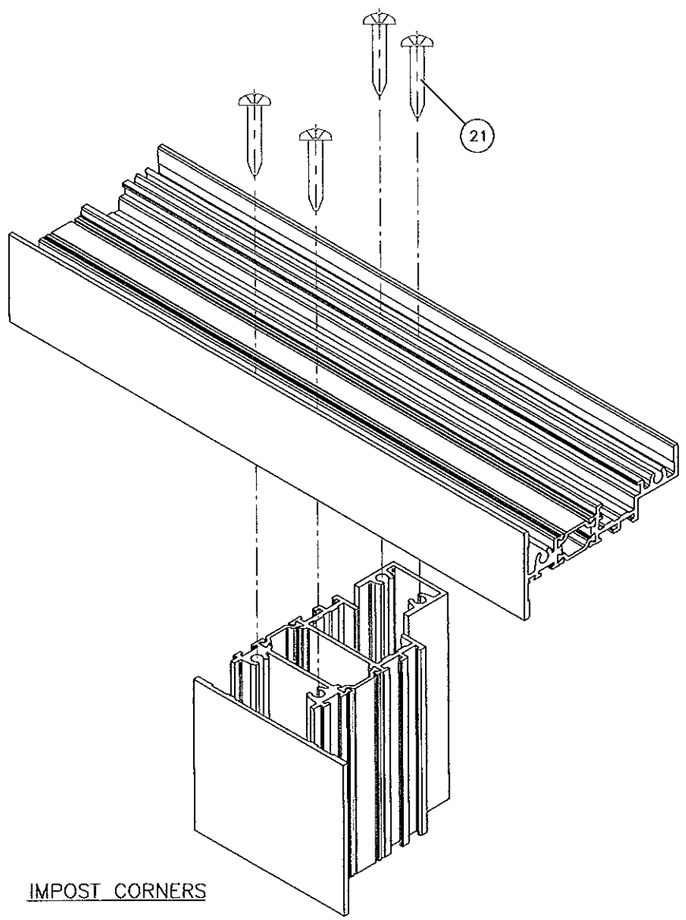

IMPOST CORNERS

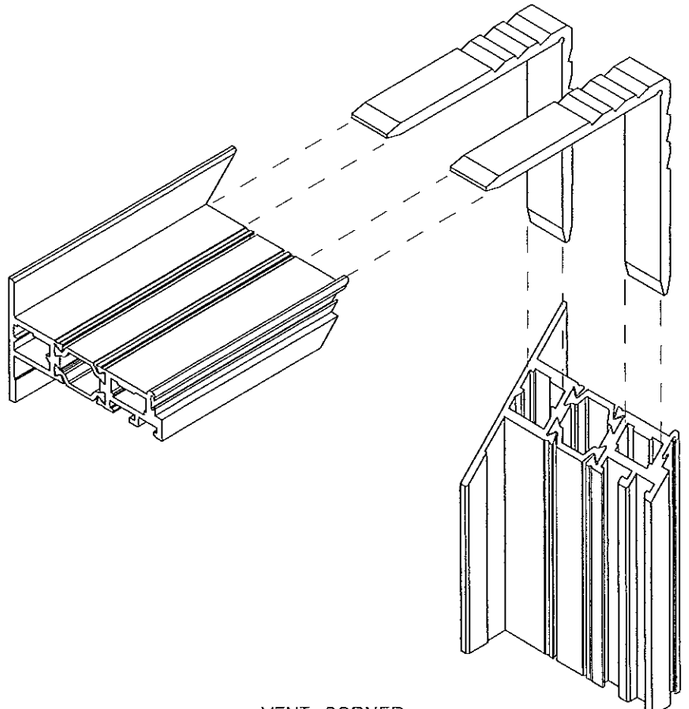

VENT CORNER

Approved as complying with the
Florida Building Code
Date 04/03/2014
NOA# 13-0917.04
Miami-Dade Product Control
By

Engr: JAVAD AHMAD
CIVIL
FLA. PE # 70592
C.A.N. 3538

AL-FAROOQ CORPORATION
ENGINEERS & PRODUCT DEVELOPMENT
1235 S.W. 87 AVE
MIAMI, FLORIDA 33174
TEL (305) 264-8100 FAX. (305) 262-6978
COMP-ANL\W13-29WW

Series 3-4250i-HP-XLT P.O. Casement Wdw. (L.M.I.)

Wausau Window & Wall Systems,
Division Of Apogee Wausau Group, Inc.
7800 INTERNATIONAL DRIVE
WAUSAU, WI 54401
TEL. (715) 845-2161 FAX. (715) 843-4055

revisions:

no	date	by	description
A	12.24.13		NO CHANGE THIS SHEET
B	03.13.14		NO CHANGE THIS SHEET

date: 06-04-13
scale: 1/2" = 1"
dr. by: HAMID
chk. by:

drawing no.
W13-29

sheet 20 of 30

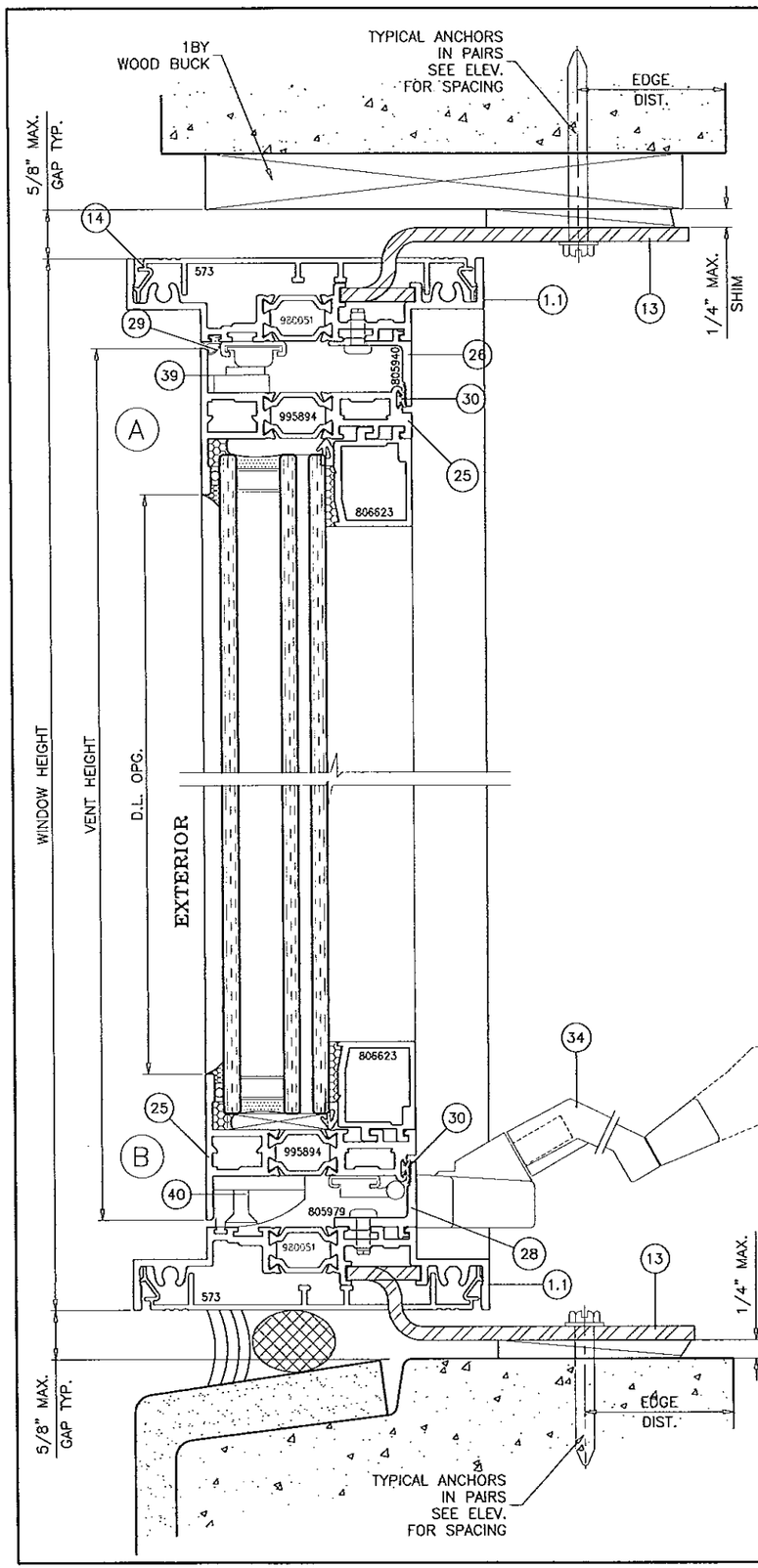

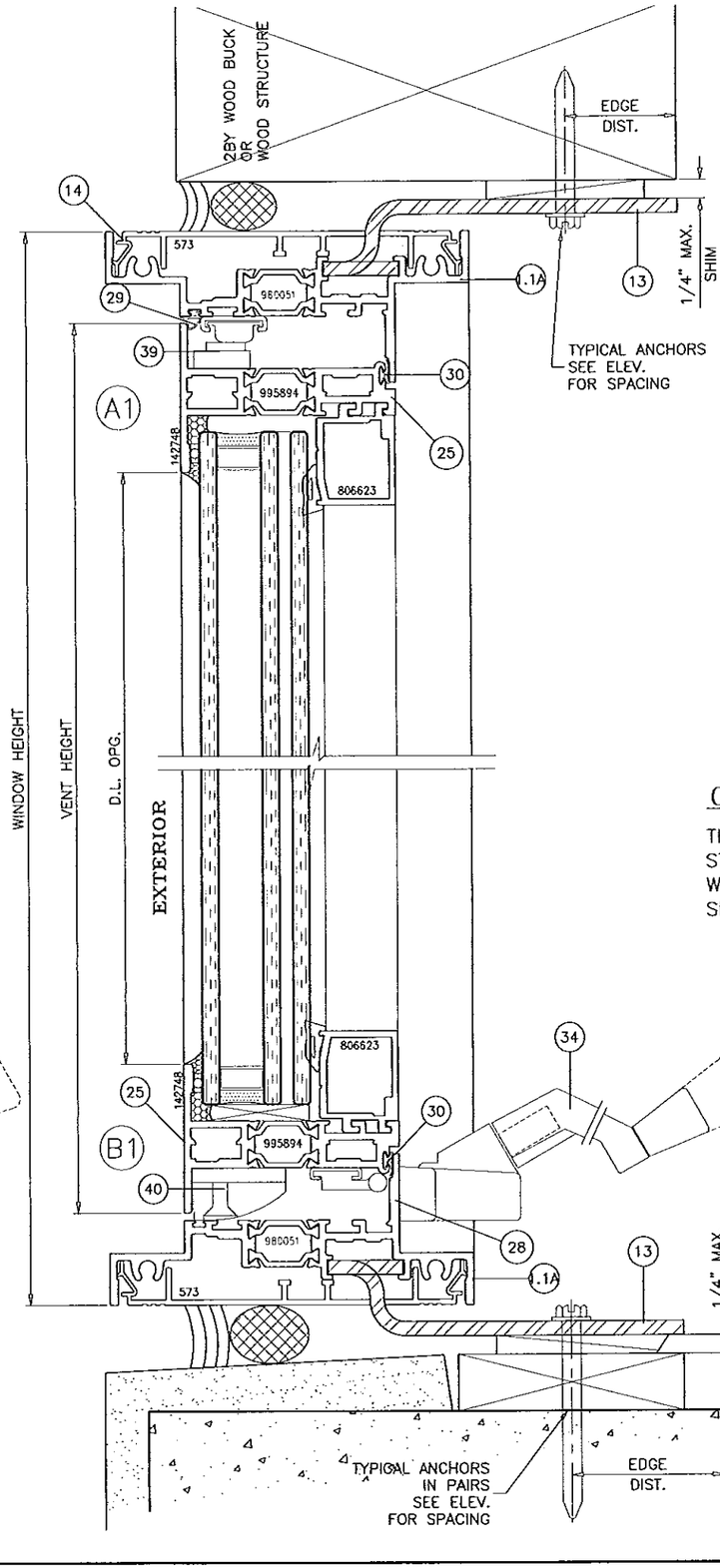

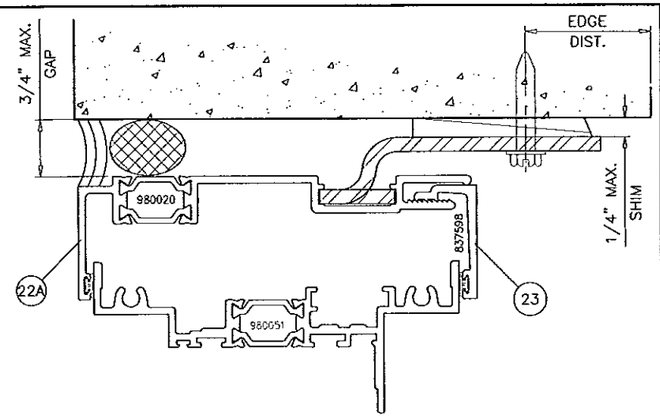

OS FRAME OPTION:

THESE WINDOWS MAY BE INSTALLED WITH OS FRAMES IN LIEU OF STANDARD FRAMES AS SHOWN IN THIS SHEET.
WINDOW CAPACITIES, GLAZING METHODS AND ANCHORING DETAILS SHOWN FOR STANDARD FRAMES ALSO APPLIES TO OS FRAMES.

Approved as complying with the
Florida Building Code
Date 04/03/14
NOA# 13-0717.04
Miami Dade Product Control
By

Engr: JAVAD AHMAD
CML
FLA. PE # 70592
C.A.N. 3538

AL-FAROOQ CORPORATION
ENGINEERS & PRODUCT DEVELOPMENT
1235 S.W. 87 AVE
MIAMI, FLORIDA 33174
TEL. (305) 264-8100 FAX. (305) 262-6978

COMP-ANL\W13-29WW

Series 3-4250i-HP-XLT P.O. Casement Wdw. (L.M.I.)

Wausau Window & Wall Systems,
Division Of Apogee Wausau Group, Inc.
7800 INTERNATIONAL DRIVE
WAUSAU, WI 54401-2161 FAX. (715) 843-4055
TEL. (715) 845-2161

revisions:

no	date	by	description
A	12.24.13		REV. PER RER COMMENTS
B	03.13.14		REV. PER RER COMMENTS

date: 06-04-13
scale: 1/2" = 1"
dr. by: HAMID
chk. by:

drawing no.
W13-29

sheet 21 of 30

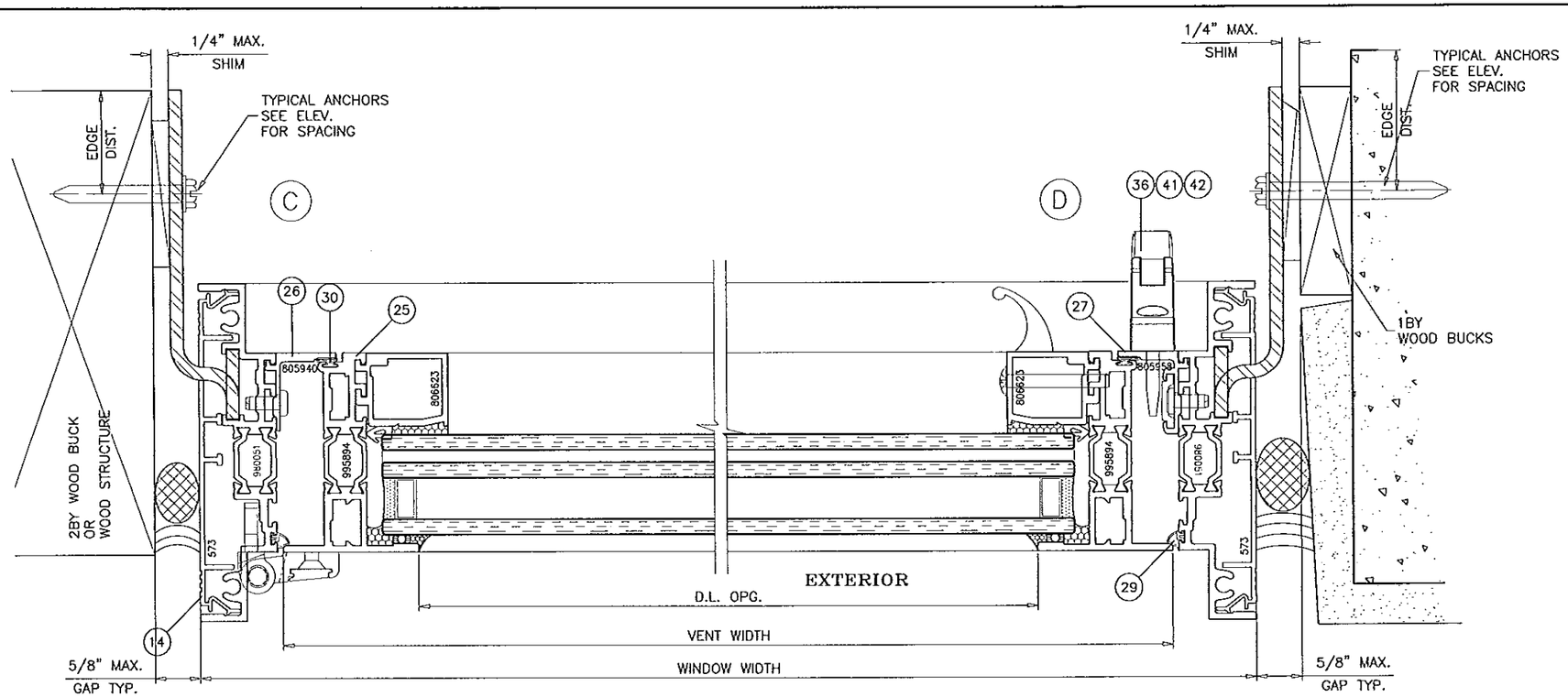

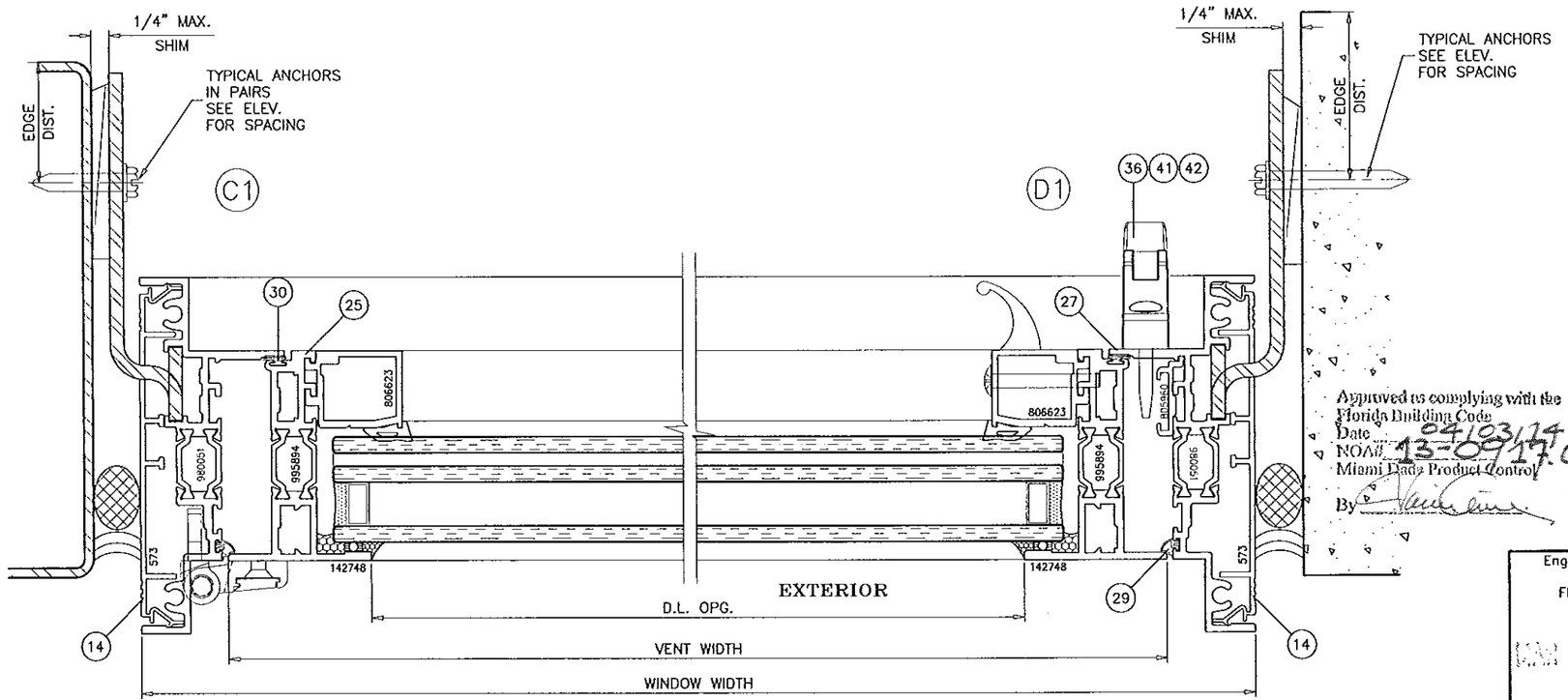

OS FRAME OPTION:

THESE WINDOWS MAY BE INSTALLED WITH OS FRAMES IN LIEU OF STANDARD FRAMES AS SHOWN IN THIS SHEET.
WINDOW CAPACITIES, GLAZING METHODS AND ANCHORING DETAILS SHOWN FOR STANDARD FRAMES ALSO APPLIES TO OS FRAMES.

Approved as complying with the Florida Building Code
Date 04/03/14
NOA# 13-09[illegible]17.04
Miami Dade Product Control
By

Engr: JAVAD AHMAD
CIVIL
FLA. PE # 70592
C.A.N. 3538

AL-FAROOQ CORPORATION
ENGINEERS & PRODUCT DEVELOPMENT
1235 S.W. 87 AVE
MIAMI, FLORIDA 33174
TEL. (305) 264-8100 FAX. (305) 262-6978
COMP-ANL\W13-29WW

Series 3-4250i-HP-XLT P.O. Casement Wdw. (L.M.I.)

Wausau Window & Wall Systems,
Division Of Apogee Wausau Group, Inc.
7800 INTERNATIONAL DRIVE
WAUSAU, WI 54401
TEL. (715) 845-2161 FAX. (715) 843-4055

revisions:			
no	date	by	description
A	12.24.13		REV. PER RER COMMENTS
B	03.13.14		NO CHANGE THIS SHEET

date: 06-04-13
scale: 1/2" = 1"
dr. by: HAMID
chk. by:

drawing no.
W13-29

sheet 22 of 30

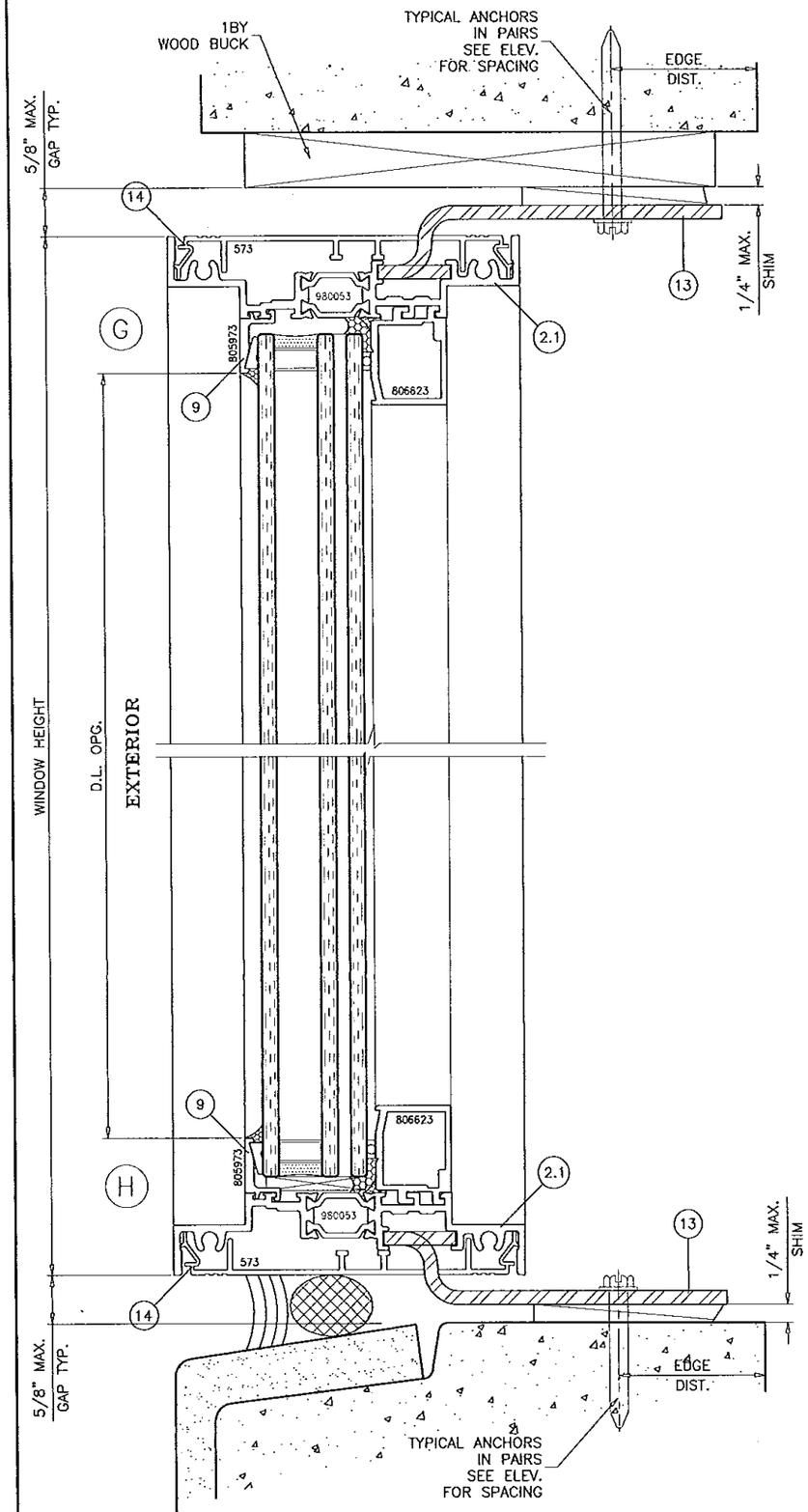

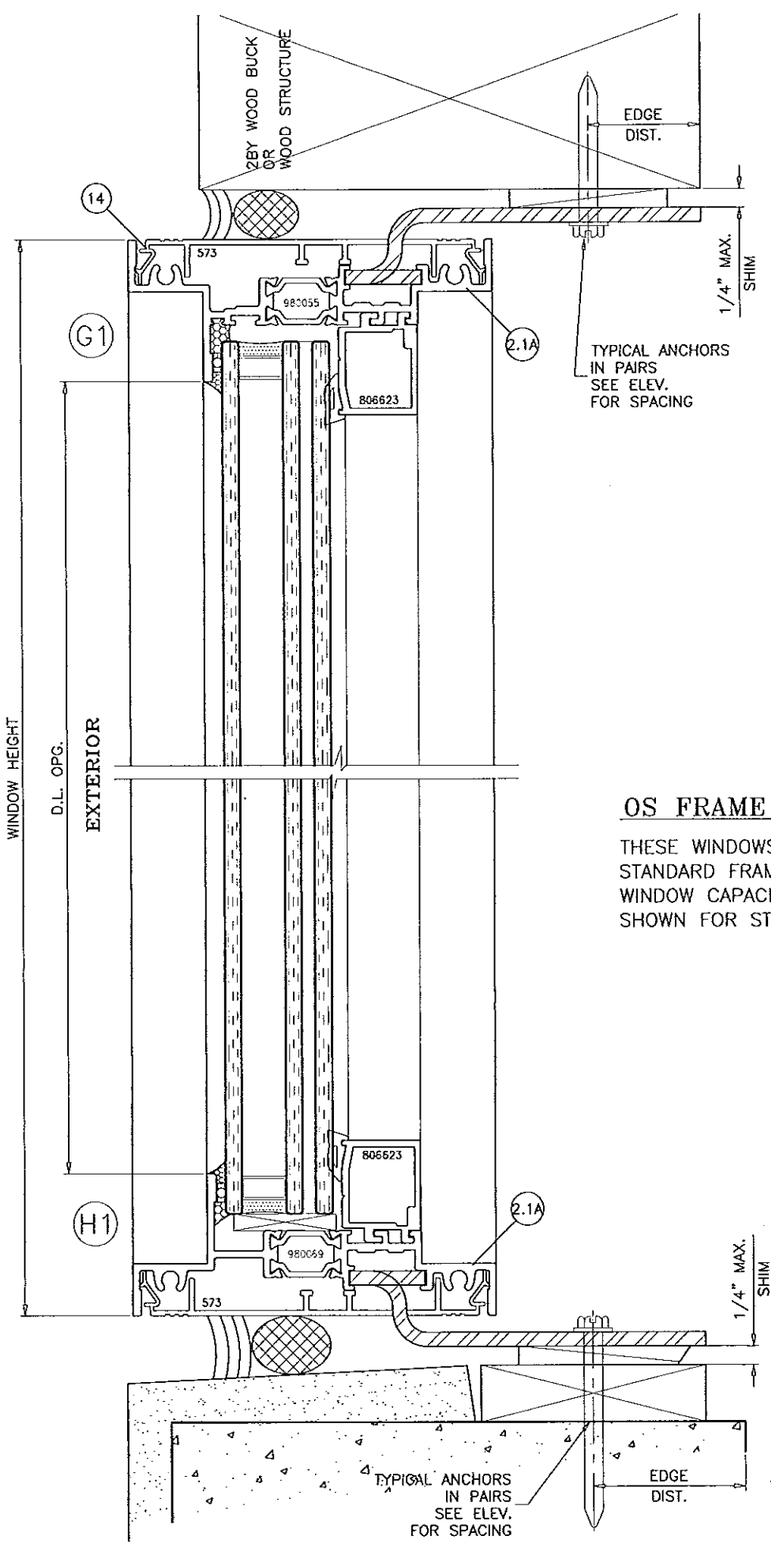

OS FRAME OPTION:

THESE WINDOWS MAY BE INSTALLED WITH OS FRAMES IN LIEU OF STANDARD FRAMES AS SHOWN IN THIS SHEET.
WINDOW CAPACITIES, GLAZING METHODS AND ANCHORING DETAILS SHOWN FOR STANDARD FRAMES ALSO APPLIES TO OS FRAMES.

Approved as complying with the
Florida Building Code
Date 04/03/14
NOA# 13-0917.04
Miami-Dade Product Control
By

Engr: JAVAD AHMAD
CIVIL
FLA. PE # 70592
C.A.N. 3538

AL-FAROOQ CORPORATION
ENGINEERS & PRODUCT DEVELOPMENT
1235 S.W. 87 AVE
MIAMI, FLORIDA 33174
TEL (305) 264-8100 FAX. (305) 262-6978
COMP-ANL\W13-29WW

Series 3-4250i-HP-XLT P.O. Casement Wdw. (L.M.I.)

Wausau Window & Wall Systems,
Division Of Apogee Wausau Group, Inc.
7800 INTERNATIONAL DRIVE
WAUSAU, WI 54401
TEL. (715) 845-2161 FAX. (715) 843-4055

revisions:		
no	date	by description
A	12.24.13	REV. PER RER COMMENTS
B	03.13.14	NO CHANGE THIS SHEET

date: 06-04-13
scale: 1/2" = 1"
dr. by: HAMID
chk. by:

drawing no.
W13-29

sheet 23 of 30

OS FRAME OPTION:

THESE WINDOWS MAY BE INSTALLED WITH OS FRAMES IN LIEU OF STANDARD FRAMES AS SHOWN IN THIS SHEET.
WINDOW CAPACITIES, GLAZING METHODS AND ANCHORING DETAILS SHOWN FOR STANDARD FRAMES ALSO APPLIES TO OS FRAMES.

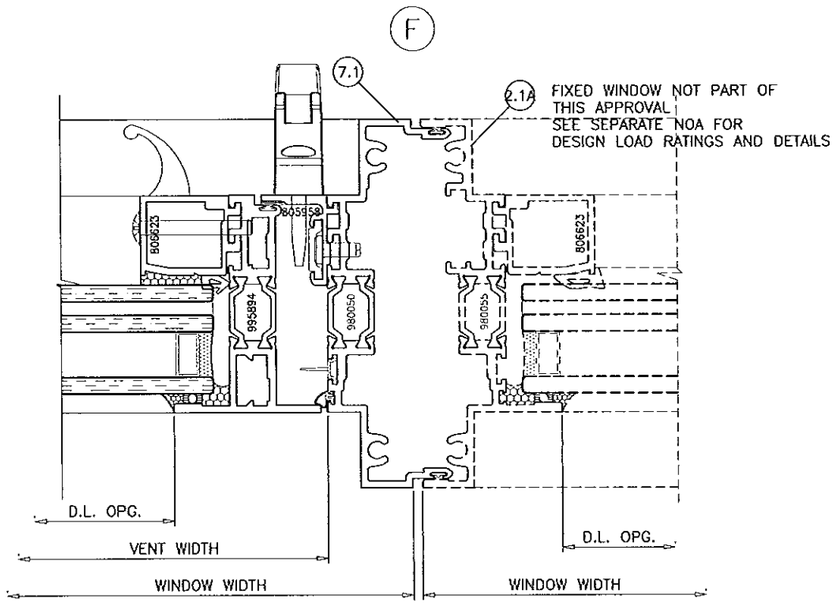

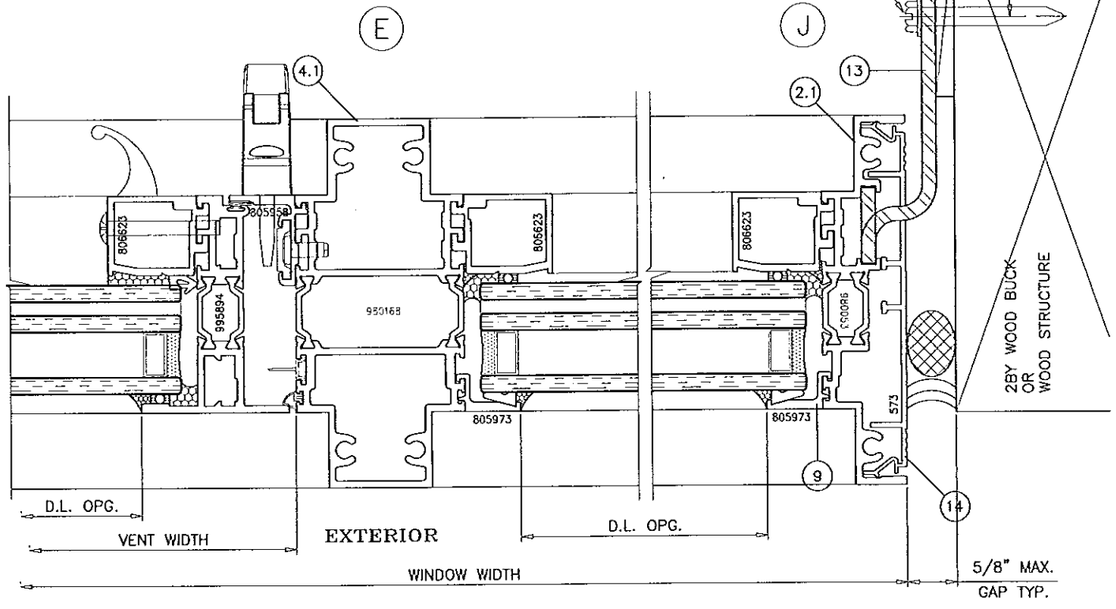

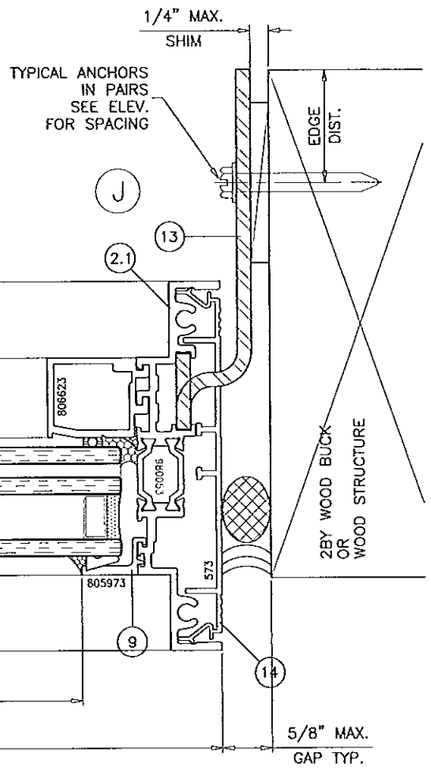

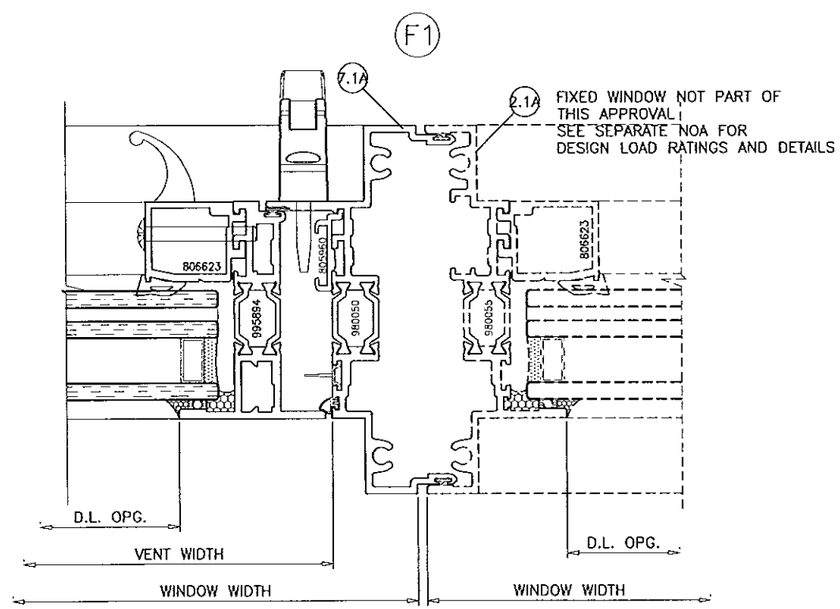

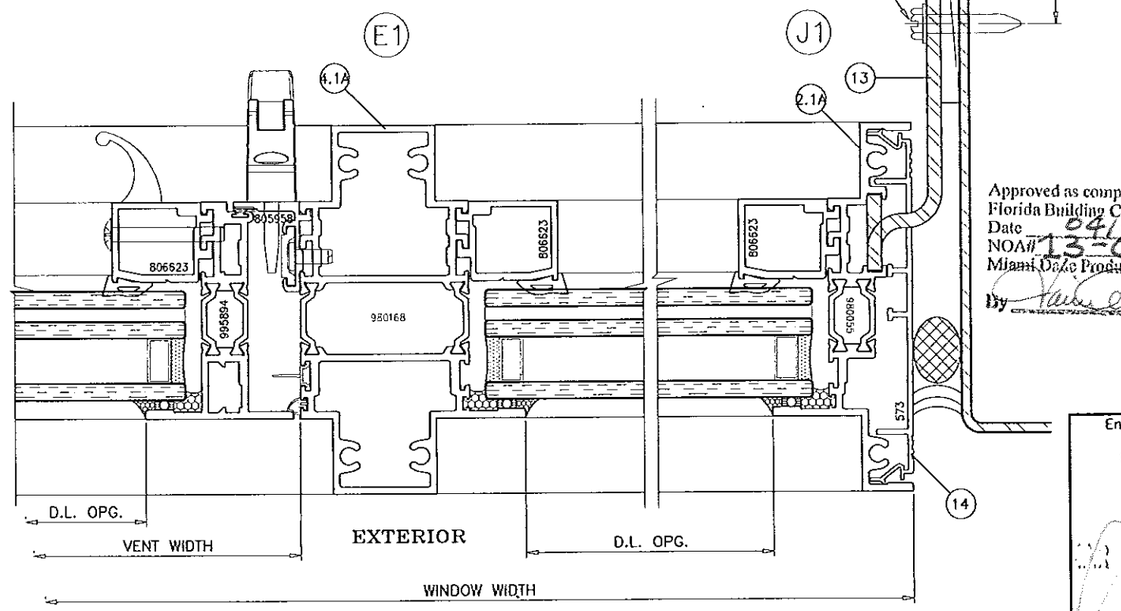

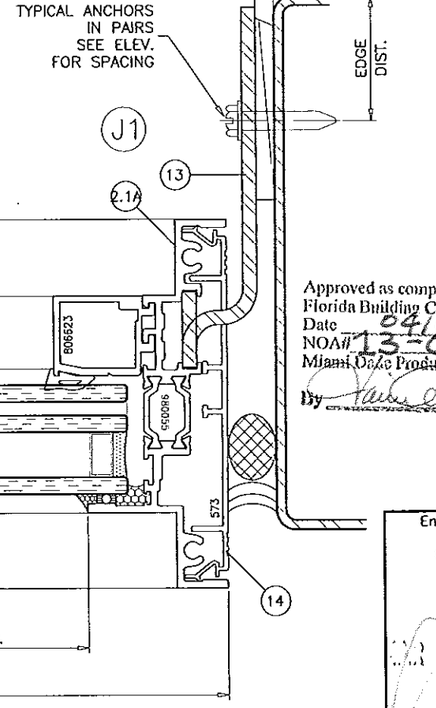

Approved as complying with the Florida Building Code
Date 04/03/14
NOA# 13-0917.04
Miami-Dade Product Control
By

Engr: JAVAD AHMAD
CIVIL
FLA. PE # 70592
C.A.N. 3538

AL-FAROOQ CORPORATION
ENGINEERS & PRODUCT DEVELOPMENT
1235 S.W. 87 AVE
MIAMI, FLORIDA 33174
TEL (305) 264-8100 FAX. (305) 262-6978

COMP-ANL\W13-29WW

Series 3-4250i-HP-XLT P.O. Casement Wdw. (L.M.I.)

Wausau Window & Wall Systems,
Division Of Apogee Wausau Group, Inc.
7800 INTERNATIONAL DRIVE
WAUSAU, WI 54401
TEL. (715) 845-2161 FAX. (715) 843-4055

revisions:			
no	date	by	description
A	12.24.13		REV. PER RER COMMENTS
B	03.13.14		REV. PER RER COMMENTS

date: 06-04-13
scale: 1/2" = 1"
dr. by: HAMID
chk. by:

drawing no.
W13-29

OS FRAMES

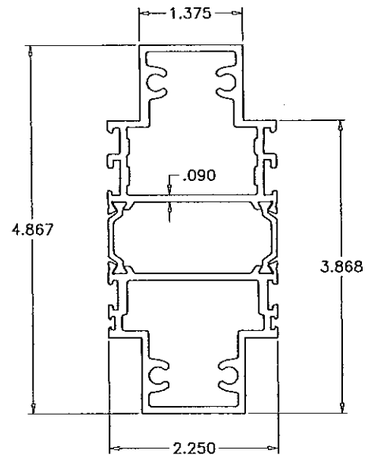

4.1 SERIES 4250i–OS IMPOST 980168 (TRIMMED)

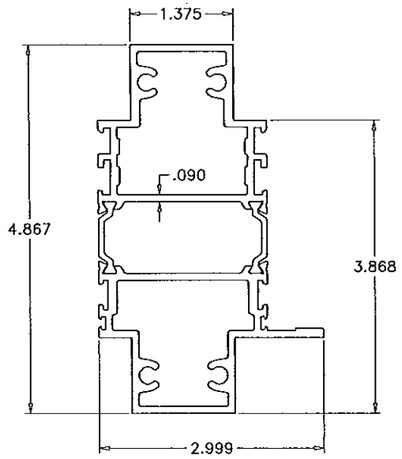

4.1A SERIES 4250i–OS ALT. IMPOST 980168

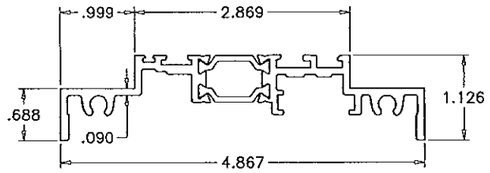

1.1 SERIES 4250i–OS FRAME HEAD/SILL/JAMB 980053

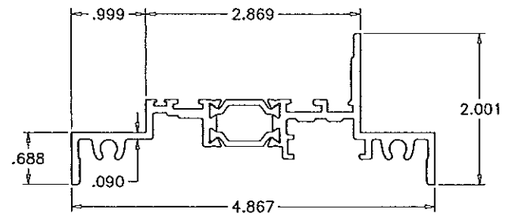

1.1A SERIES 4250i–OS ALT. FRAME HEAD/SILL/JAMB 980051

CONTINUOUS POLYAMIDE NYLON THERMAL BARRIER
MECHANICALLY CRIMPED INTO CROSS KNURLED CAVITIES
BY 'TECHNOFORM BAUTEC'
DUROMETR 82±4 SHORE D
TYPICAL ALL FRAMES

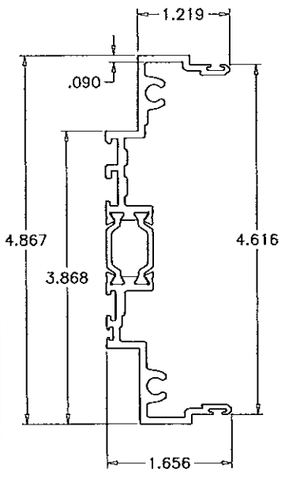

7.1 SERIES 4250i–OS MALE MULLION 980052

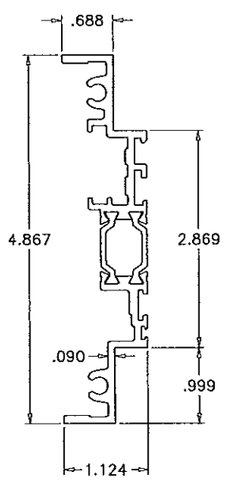

2.1 SERIES 4250i–OS FEMALE MULLION 980053

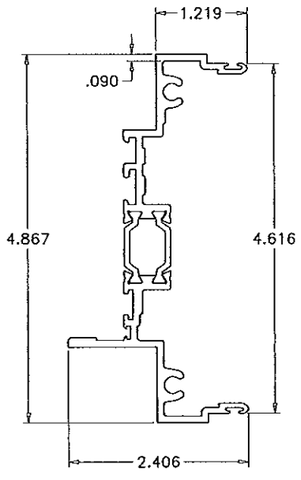

7.1 SERIES 4250i–OS ALT. MALE MULLION 980054

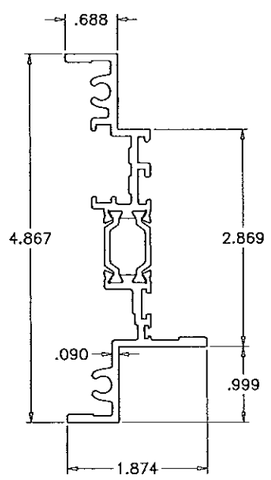

– SERIES 4250i–OS FEMALE MULLION 980055

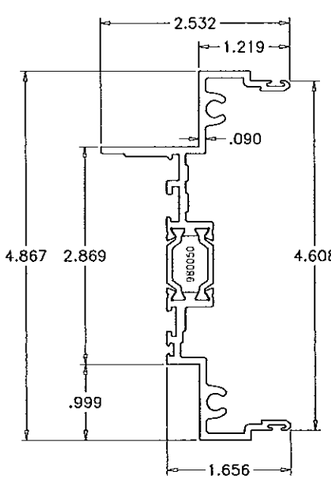

– SERIES 4250i–OS MALE MULLION 980050

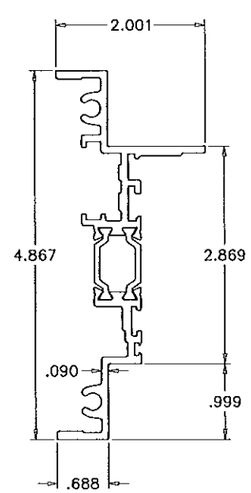

– SERIES 4250i–OS FEMALE MULLION 980051

Approved as complying with the
Florida Building Code
Date 04/03/14
NOA# 13-0917.04
Miami-Dade Product Control
By

Engr: JAVAD AHMAD
CIVIL
FLA. PE # 70592
C.A.N. 3538

AL-FAROOQ CORPORATION
ENGINEERS & PRODUCT DEVELOPMENT
1235 S.W. 87 AVE
MIAMI, FLORIDA 33174
TEL. (305) 264-8100 FAX. (305) 262-6978

COMP-ANL\W13-29WW

Series 3-4250i-HP-XLT P.O. Casement Wdw. (L.M.I.)

Wausau Window & Wall Systems,
Division Of Apogee Wausau Group, Inc.
7800 INTERNATIONAL DRIVE
WAUSAU, WI 54401
TEL. (715) 845-2161 FAX. (715) 843-4055

revisions:

no	date	by	description
A	12.24.13		REV. PER RER COMMENTS
B	03.13.14		NO CHANGE THIS SHEET

date: 06-04-13
scale: 1/2" = 1"
dr. by: HAMID
chk. by:

drawing no.
W13-29

sheet 25 of 30

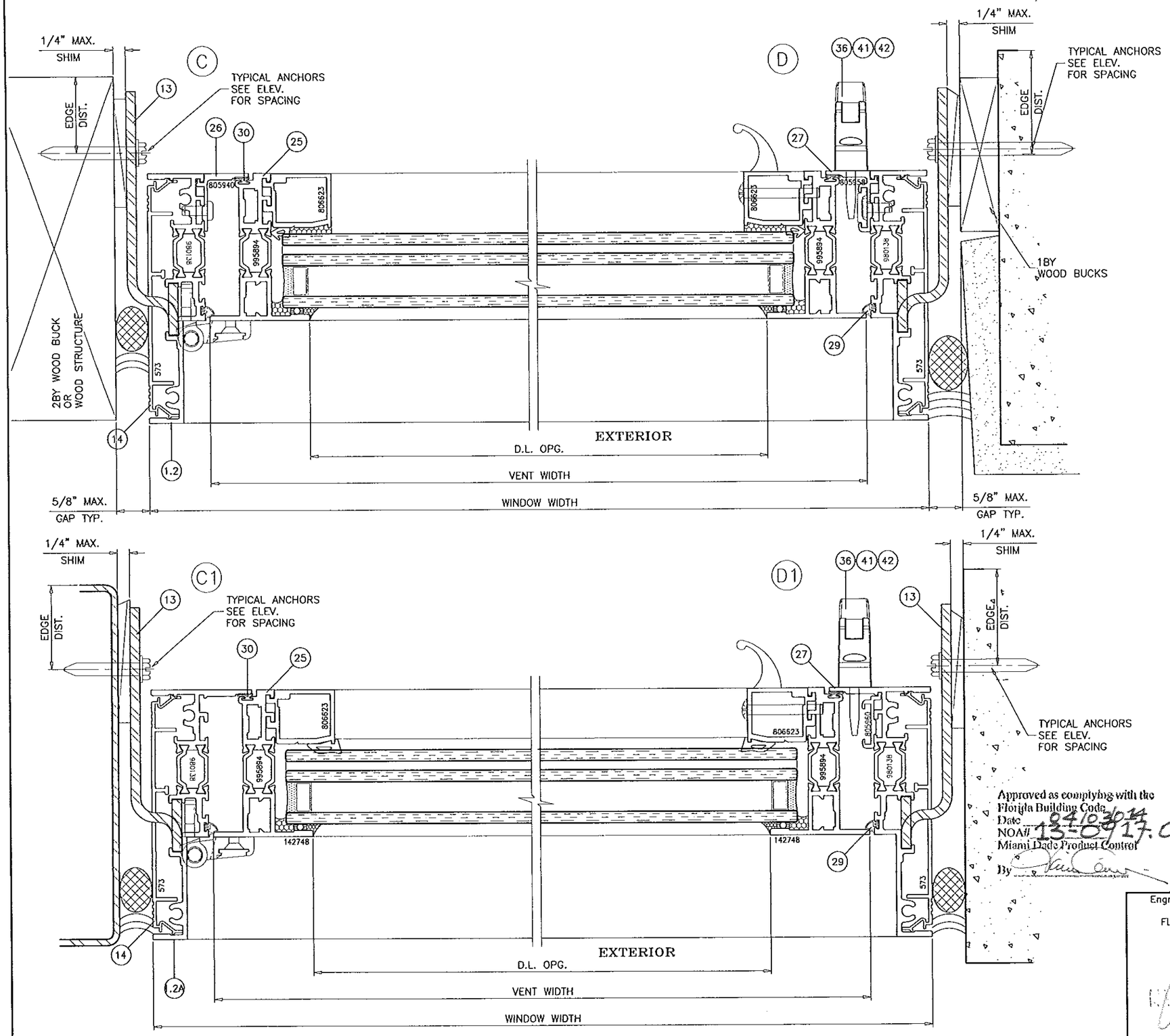

SDH FRAME OPTION:

THESE WINDOWS MAY BE INSTALLED WITH SDH FRAMES IN LIEU OF STANDARD FRAMES AS SHOWN IN THIS SHEET.
WINDOW CAPACITIES, GLAZING METHODS AND ANCHORING DETAILS SHOWN FOR STANDARD FRAMES ALSO APPLIES TO SDH FRAMES.

Approved as complying with the Florida Building Code
Date 04/03/14
NOA# 13-0917.04
Miami Dade Product Control
By

Engr: JAVAD AHMAD
CIVIL
FLA. PE # 70592
C.A.N. 3538

AL-FAROOQ CORPORATION
ENGINEERS & PRODUCT DEVELOPMENT
1235 S.W. 87 AVE
MIAMI, FLORIDA 33174
TEL (305) 264-8100 FAX. (305) 262-6978
COMP-ANL\W13-29WW

Series 3-4250i-HP-XLT P.O. Casement Wdw. (L.M.I.)

Wausau Window & Wall Systems,
Division Of Apogee Wausau Group, Inc.
7800 INTERNATIONAL DRIVE
WAUSAU, WI 54401
TEL. (715) 845-4055 FAX. (715) 843-4055

revisions:

no	date	by	description
A	12.24.13		REV. PER RER COMMENTS
B	03.13.14		NO CHANGE THIS SHEET

date: 06-04-13
scale: 1/2" = 1"
dr. by: HAMID
chk. by:

drawing no. W13-29

SDH FRAME OPTION:

THESE WINDOWS MAY BE INSTALLED WITH SDH FRAMES IN LIEU OF STANDARD FRAMES AS SHOWN IN THIS SHEET.
WINDOW CAPACITIES, GLAZING METHODS AND ANCHORING DETAILS SHOWN FOR STANDARD FRAMES ALSO APPLIES TO SDH FRAMES.

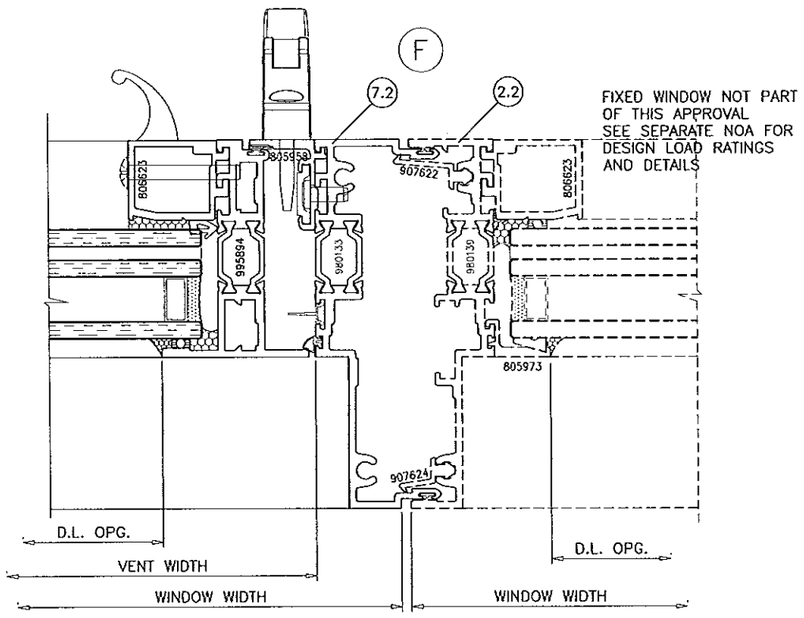

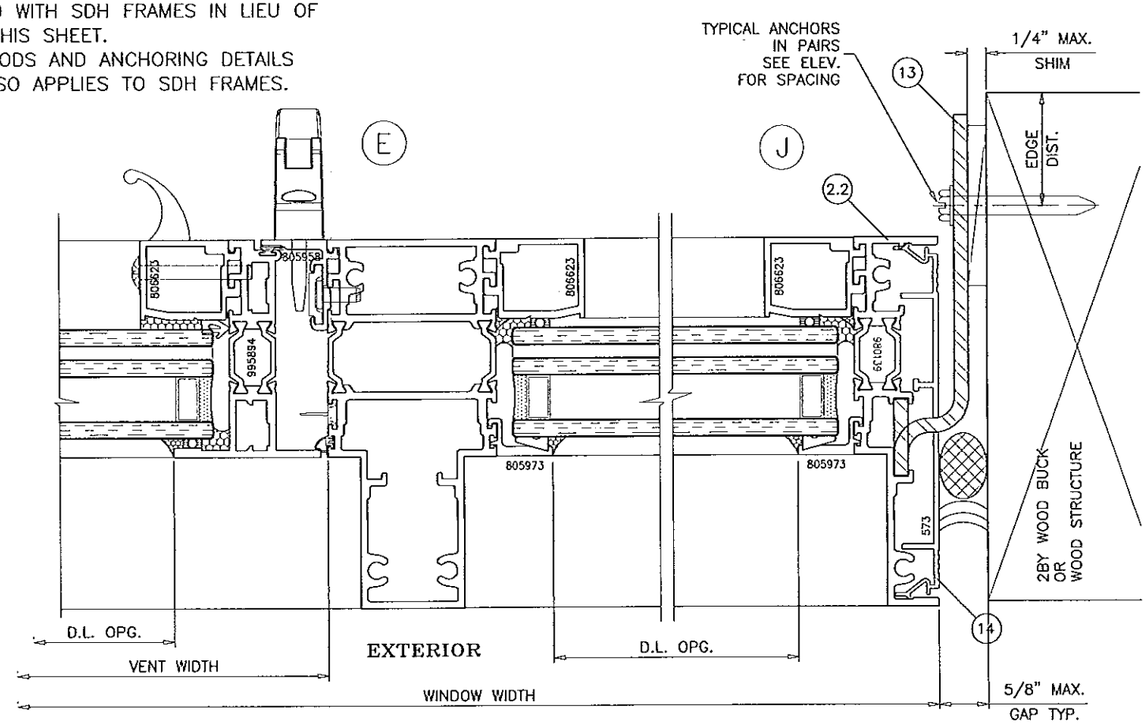

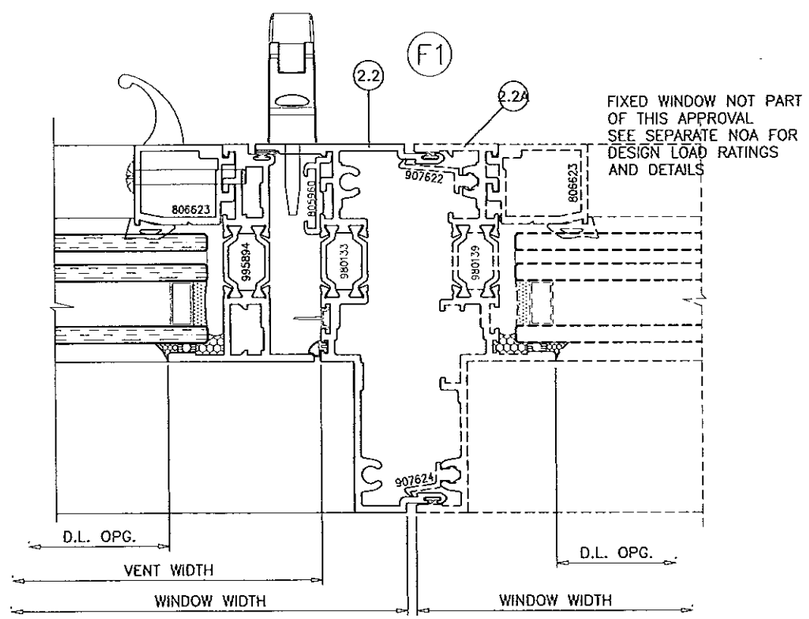

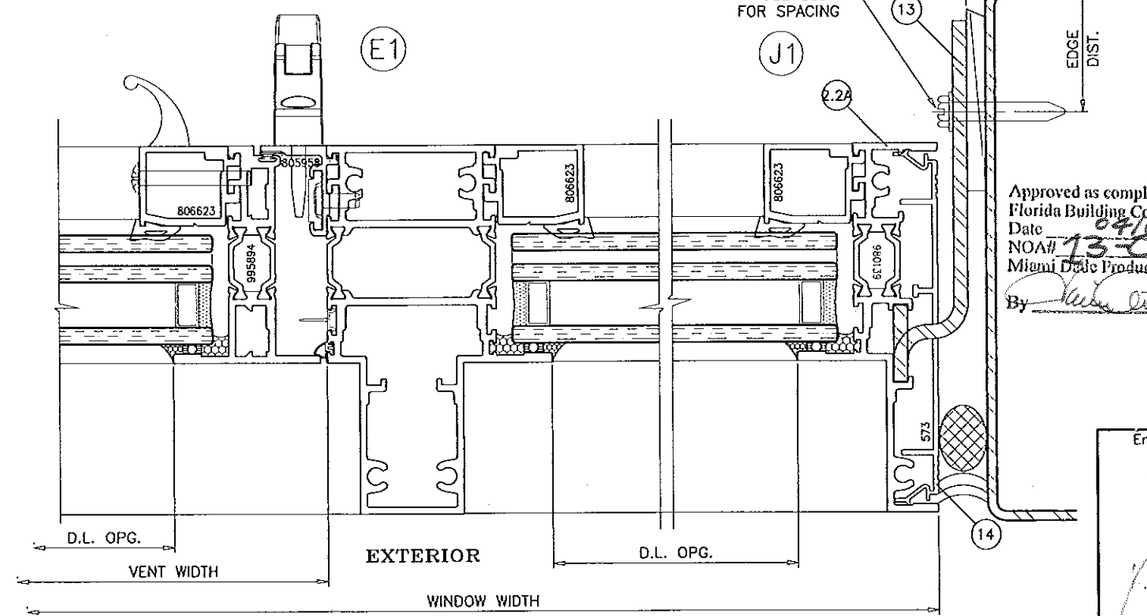

Approved as complying with the Florida Building Code
Date 04/03/14
NOA# 13-0917.04
Miami Dade Product Control
By

Engr: JAVAD AHMAD
CIVIL
FLA. PE # 70592
C.A.N. 3538

AL-FAROOQ CORPORATION
ENGINEERS & PRODUCT DEVELOPMENT
1235 S.W. 87 AVE
MIAMI, FLORIDA 33174
TEL. (305) 264-8100 FAX. (305) 262-6978

COMP-ANL\W13-29WW

Series 3-4250i-HP-XLT P.O. Casement Wdw. (L.M.I.)

Wausau Window & Wall Systems,
Division Of Apogee Wausau Group, Inc.
7800 INTERNATIONAL DRIVE
WAUSAU, WI 54401
TEL. (715) 845-2161 FAX. (715) 843-4055

revisions:			
no	date	by	description
A	12.24.13		REV. PER RER COMMENTS
B	03.13.14		REV. PER RER COMMENTS

date: 06-04-13
scale: 1/2" = 1"
dr. by: HAMID
chk. by:

drawing no.
W13-29

sheet 29 of 30

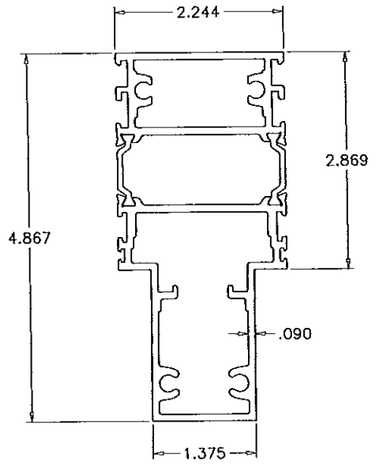

SERIES 4250i–SDH
IMPOST
–

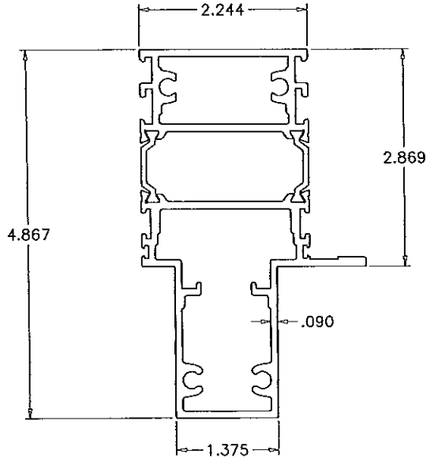

SERIES 4250i–SDH
ALT. IMPOST
–

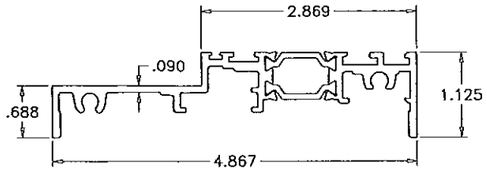

SERIES 4250i–SDH
FRAME HEAD/SILL/JAMB
980138 (TRIMMED)
1.2

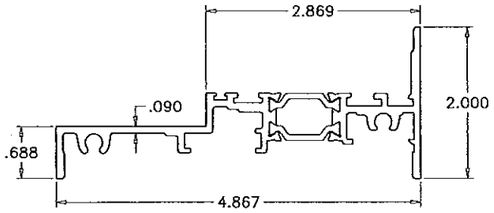

SERIES 4250i–SDH
ALT. FRAME HEAD/SILL/JAMB
980138
1.2A

CONTINUOUS POLYAMIDE NYLON THERMAL BARRIER
MECHANICALLY CRIMPED INTO CROSS KNURLED CAVITIES
BY 'TECHNOFORM BAUTEC'
DUROMETR 82±4 SHORE D
TYPICAL ALL FRAMES

SDH FRAMES

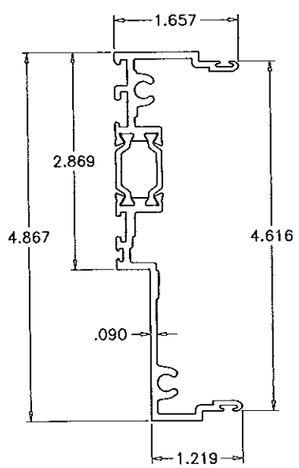

SERIES 4250i–SDH
MALE MULLION
980134
7.2

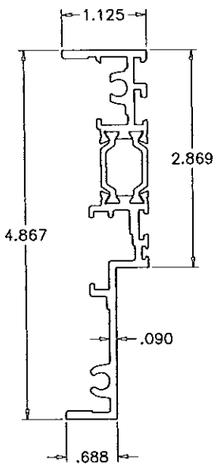

SERIES 4250i–SDH
FEMALE MULLION
980139
2.2

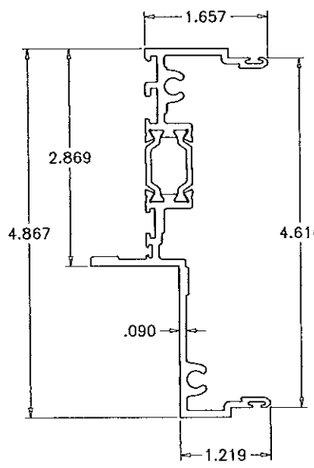

SERIES 4250i–SDH
ALT. MALE MULLION
980137
7.2A

SERIES 4250i–SDH
ALT. FEMALE MULLION
980136
2.2A

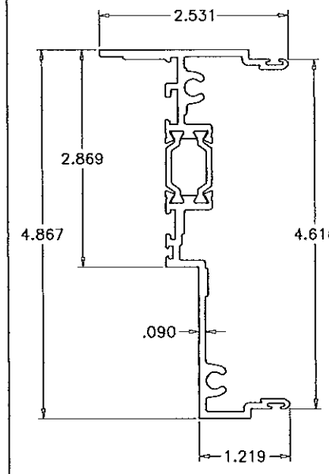

SERIES 4250i–SDH
MALE MULLION
980133
–

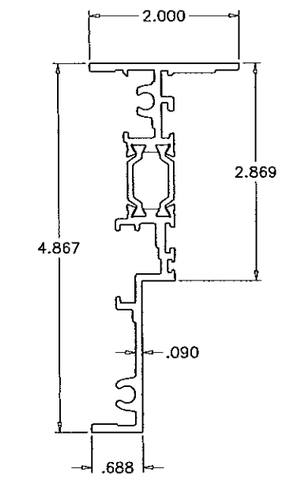

SERIES 4250i–SDH
FEMALE MULLION
980138
–

Approved as complying with the
Florida Building Code
Date 04/03/14
NOA# 13-0917.04
Miami-Dade Product Control
By

Engr: JAVAD AHMAD
CIVIL
FLA. PE # 70592
C.A.N. 3538

afc
AL-FAROOQ CORPORATION
ENGINEERS & PRODUCT DEVELOPMENT
1235 S.W. 87 AVE
MIAMI, FLORIDA 33174
TEL (305) 264-8100 FAX. (305) 262-6978
COMP-ANL\W13-29WW

Series 3-4250i-HP-XLT P.O. Casement Wdw. (L.M.I.)

Wausau Window & Wall Systems,
Division Of Apogee Wausau Group, Inc.
7800 INTERNATIONAL DRIVE
WAUSAU, WI 54401
TEL. (715) 845-2161 FAX. (715) 843-4055

revisions:			
no	date	by	description
A	12.24.13		REV. PER RER COMMENTS
B	03.13.14		NO CHANGE THIS SHEET

date: 06-04-13
scale: 1/2" = 1"
dr. by: HAMID
chk. by:

drawing no.
W13-29

sheet 30 of 30