MIAMI-DADE COUNTY
PRODUCT CONTROL SECTION
11805 SW 26 Street, Room 208
Miami, Florida 33175-2474
T (786) 315-2590 F (786) 315-2599
www.miamidade.gov/economy

DEPARTMENT OF REGULATORY AND ECONOMIC RESOURCES (RER)
BOARD AND CODE ADMINISTRATION DIVISION

NOTICE OF ACCEPTANCE (NOA)

ASSA ABLOY Entrance System, Inc.
1900 Airport Road
Monroe, NC 28110

SCOPE:

This NOA is being issued under the applicable rules and regulations governing the use of construction materials. The documentation submitted has been reviewed and accepted by Miami-Dade County RER -Product Control Section to be used in Miami Dade County and other areas where allowed by the Authority Having Jurisdiction (AHJ).

This NOA shall not be valid after the expiration date stated below. The Miami-Dade County Product Control Section (In Miami Dade County) and/or the AHJ (in areas other than Miami Dade County) reserve the right to have this product or material tested for quality assurance purposes. If this product or material fails to perform in the accepted manner, the manufacturer will incur the expense of such testing and the AHJ may immediately revoke, modify, or suspend the use of such product or material within their jurisdiction. RER reserves the right to revoke this acceptance, if it is determined by Miami-Dade County Product Control Section that this product or material fails to meet the requirements of the applicable building code.

This product is approved as described herein, and has been designed to comply with the Florida Building Code, including the High Velocity Hurricane Zone.

DESCRIPTION: BEASAM Series " Resilience "(So-Sx-Sx-So) Aluminum Automatic Sliding Glass Door w/ Full Breakout-LMI

APPROVAL DOCUMENT: Drawing No. **BES0006 Rev E**, titled "Series Besam Resilience FBO Impact Door System", sheets 1 through 26 of 26 (includes sheets 6A & 7A), prepared by PTC Product Design, LLC, dated 02/09/10 and last revised on 09/19/13, signed and sealed by Robert J. Amoruso, P.E., bearing the Miami-Dade County Product Control Revision stamp with the Notice of Acceptance number and expiration date by the Miami-Dade County Product Control section.

MISSILE IMPACT RATING: Large and Small Impact Resistant

Limitations:

1. Max panel OC widths not to exceed 42".
2. Not approved where water infiltration is required.
3. Manufacturing facility as noted above, private labeling is <u>not</u> part of this approval.
4. Sill installation is in concrete substrate.

LABELING: Each unit shall bear a permanent label with the manufacturer's name or logo, city, state and series and following statement: "Miami-Dade County Product Control Approved", noted herein.

RENEWAL of this NOA shall be considered after a renewal application has been filed and there has been no change in the applicable building code negatively affecting the performance of this product.

TERMINATION of this NOA will occur after the expiration date or if there has been a revision or change in the materials, use, and/or manufacture of the product or process. Misuse of this NOA as an endorsement of any product, for sales, advertising or any other purposes shall automatically terminate this NOA. Failure to comply with any section of this NOA shall be cause for termination and removal of NOA.

ADVERTISEMENT: The NOA number preceded by the words Miami-Dade County, Florida, and followed by the expiration date may be displayed in advertising literature. If any portion of the NOA is displayed, then it shall be done in its entirety.

INSPECTION: A copy of this entire NOA shall be provided to the user by the manufacturer or its distributors and shall be available for inspection at the job site at the request of the Building Official.

This NOA **revises NOA # 12-1231.07** and consists of this page 1 and evidence pages E-1, as well as approval document mentioned above.

The submitted documentation was reviewed by **Ishaq I. Chanda, P.E.**

MIAMI-DADE COUNTY APPROVED

1/30/14

NOTICE OF ACCEPTANCE: EVIDENCE SUBMITTED

A. DRAWINGS

1. Manufacturer's die drawings and sections (Submitted under file # **12-1231.07 /#12-0314.06**)
2. Drawing No. **BES0006 Rev E**, titled "Series Besam Resilience FBO Impact Door System", sheets 1 through 26 of 26 (includes 6A & 7A), prepared by PTC Product Design, LLC, dated 02/ 09/10 and last revised on 09/19/13, signed and sealed by Robert J. Amoruso, P.E.

Note: This revision consist of addition of metal substrate option and revising the existing substrates.

B. TESTS (Submitted under files # **12-1231.07 /#12-0314.06**)

1. Test reports on: 1) Air Infiltration Test, per FBC, TAS 202-94
   2) Uniform Static Air Pressure Test, Loading per FBC TAS 202-94
   3) Water Resistance Test, per FBC, TAS 202-94 (Not conducted)
   4) Large Missile Impact Test per FBC, TAS 201-94
   5) Cyclic Wind Pressure Loading per FBC, TAS 203-94
   6) Forced Entry Test, per FBC 2411 3.2.1, TAS 202-94

along with installation diagram of an aluminum automatic sliding glass doors, prepared by American Test lab, Inc Test Report No. **ATLNC-0427.01-09**, dated 08/13/09 and revised on 06/23/10 by an addendum letter, signed and sealed by David Johnson, P.E.

2. Additional one sample test, Test Report No. **ATNC-0915.01-10**, dated 09/23/10 per TAS 201, 202, 203, issued by American Test lab, signed and sealed by David Johnson, P. E.

C. CALCULATIONS (Submitted under files # **12-1231.07 /#12-0314.06**)

1. Anchor verification calculations dated 09/19/13, prepared by PTC, LLC, signed and sealed by Robert J. Amoruso, P.E.
2. Re-design cover & cap parts Dwgs # 10009858 & 1008139, signed & sealed by Robert J. Amoruso, P.E. (Submitted under file **#12-0314.06**)
3. Glazing complies w/ ASTME-1300-02 & -04.

D. QUALITY ASSURANCE

1. Miami Dade Department of Permitting, Environment, and Regulatory Affairs (PERA).

E. MATERIAL CERTIFICATIONS

1. Notice of Acceptance No. **11-0624.02** issued to E.I. DuPont DeNemours & Co., Inc. for their "**DuPont Sentry Glass® Interlayer**", expiring on 01/14/17.
2. Notice of Acceptance No. **12-1231.10** issued to Eastman Chemical Company (MA) (former Solutia), for "Saflex clear & color interlayer", expiring on 05/21/2016.

F. STATEMENTS (Submitted under file # **12-1231.07,** except item #1).

1. Statement letter of conformance to FBC 2010 & 2007 and "No financial interest", dated 09/19/2013, signed & sealed by Robert J. Amoruso, P.E
2. Statement of conformance to FBC 2010, dtd 03/08/12, signed & sealed by Robert J. Amoruso, P.E.
3. Active legal name documents with Department of the Secretary of State, North Carolina.
4. Addendum letter dated 06-23-10, issued by American Test lab, signed and sealed by David Johnson, P. E.
5. Lab compliance as part of the above referenced test report.

G. OTHER

1. This NOA **revises** NOA # **12-1231.07,** expiring 11/04/15.
2. Previous associated NOA **# 12-0314.06** (Formerly known as BESAM Automated Entrance System, Inc.).
3. Test proposal # **08-2056-R**, dated Feb 25, 2009, issued by BCCO.
4. Amendment certificate of corporation name change from Besam US, Inc. to ASSA ABLOY Entrance System US, Inc, issued dated 18th June, 2012 by State of North Carolina.

Ishaq I. Chanda

Ishaq I. Chanda, P.E.
Product Control Examiner
NOA No. 13-0924.07
Expiration Date: November 04, 2015
Approval Date: February 07, 2014

besam
ASSA ABLOY

BESAM RESILIENCE FULL BREAKOUT BI-PART LARGE & SMALL MISSLE IMPACT DOOR SYSTEM INSTALLATION ANCHORAGE DETAILS

MANUFACTURED BY:
ASSA ABLOY ENTRANCE SYSTEMS US, INC.
UNDER BESAM BRANDED PRODUCTS

GENERAL NOTES

1. THE PRODUCT ANCHORAGE SHOWN HEREIN IS DESIGNED TO COMPLY WITH THE 2007 & 2010 FLORIDA BUILDING CODE (FBC), INCLUDING HIGH VELOCITY HURRICANE ZONE (HVHZ) REQUIREMENTS AT THE DESIGN PRESSURES STATED HEREIN.
2. THE PRODUCT DETAILS CONTAINED HEREIN ARE BASED UPON SIGNED AND SEALED TEST REPORT ATLNC #0427.01-09, DATED 08/13/09 AND ATLNC #0915.01-10, DATED 9/23/10 AND ASSOCIATED LABORATORY STAMPED DRAWINGS. THE PRODUCT HAS BEEN EVALUATED FOR CONFORMANCE TO THE STANDARDS LISTED IN THE 2007 & 2010 FLORIDA BUILDING CODE (FBC) AND IS IN COMPLIANCE WITH SAID STANDARDS.
3. ADEQUACY OF THE EXISTING STRUCTURAL CONCRETE / MASONRY, WOOD AND METAL FRAMING AS A MAIN WIND FORCE RESISTING SYSTEM CAPABLE OF WITHSTANDING AND TRANSFERRING APPLIED PRODUCT LOADS TO THE FOUNDATION IS THE RESPONSIBILITY OF THE ENGINEER OR ARCHITECT OF RECORD FOR THE PROJECT.
4. 1 X AND 2 X BUCKS (WHEN USED) SHALL BE DESIGNED AND ANCHORED TO PROPERLY TRANSFER ALL LOADS TO THE STRUCTURE. BUCK DESIGN AND INSTALLATION IS THE RESPONSIBILITY OF THE ENGINEER OR ARCHITECT OF RECORD FOR THE PROJECT.
5. IN NON-HVHZ AND HVHC AREAS WHERE WINDBORNE DEBRIS PROTECTION REQUIREMENTS EXIST, USE OF AN IMPACT PROTECTIVE SYSTEM COMPLYING WITH THE FBC REQUIREMENTS FOR WINDBORNE DEBIS REGIONS IS NOT REQUIRED FOR THE PRODUCT HEREIN.
6. DOOR FRAME AND PANEL MATERIAL: ALUMINUM 6063-T5 AND 6063-T6
7. GLASS MEETS THE REQUIREMENTS OF ASTM E1300-04e1. SEE SHEET 9 FOR GLAZING DETAILS.
8. PANEL DESIGNATIONS "SO" AND "SX" REPRESENT THE FOLLOWING:
   SX: INSIDE SLIDING PANEL
   SO: OUTSIDE SLIDING PANEL
9. A 1/3 INCREASE IN ALLOWABLE STRESS FOR WIND LOADS WAS NOT USED IN THE DESIGN OF THE PRODUCT SHOWN HEREIN. WINDLOAD DURATION FACTOR (Cd = 1.0) HAS BEEN USED FOR WOOD ANCHOR DESIGN.
10. TEST PROTOCOL: TAS 201, TAS 202 AND TAS-203
11. INSTALLATION ANCHOR CAPACITIES FOR PRODUCTS HEREIN ARE BASED ON SUBSTRATE MATERIALS WITH THE FOLLOWING PROPERTIES:
    A) WOOD - MINIMUM SPECIFIC GRAVITY = 0.55
    B) CONCRETE - MINIMUM COMPRESSIVE STRENGTH OF 2500 PSI.
    C) MASONRY - STRENGTH CONFORMING TO ASTM C-90 WITH A MEDIUM DENSITY > 117 PCF, MIN. COMP. STRENGTH OF 1900 PSI.
    D) STEEL STUD WITH MINIMUM 16 GA. (0.0566") THICKNESS AND Ftu = 45 KSI AND Fty = 33 KSI.
    E) ALUMINUM OR STEEL WITH A MINIMUM 1/8" THICKNESS AND Ftu = 22 KSI AND Fty = 16 KSI.

DESIGN PRESSURE RATING (PSF)		IMPACT RATING
WHERE WATER RATING IS REQUIRED	WHERE WATER RATING IS NOT REQUIRED	LARGE MISSILE IMPACT SMALL MISSILE IMPACT
N/A	±70 PSF	

TABLE OF CONTENTS (CONT)

SHEET	REV	DESCRIPTION
1	E	GENERAL NOTES AND DP TABLE
2	E	EXTERIOR ELEVATION & BREAKOUT DETAIL
3	E	HEADER AND THRESHOLD SECTIONS
4	D	HORIZONTAL SECTIONS, MED & WIDE STILE
5	E	HORIZONTAL & VERTICAL SECTIONS
6	D	HEADER AND THRESHOLD SECTIONS
6A	D	JAMB ASSEMBLY DETAIL
7	E	ANCHOR DETAILS & INSTALLATION NOTES
7A	E	ANCHOR DETAILS & INSTALLATION NOTES
8	D	GLAZING DETAILS
9	D	EXTRUSION PROFILES: DOOR STILES & RAILS
10	D	EXTRUSION PROFILES
11	D	NARROW STILE SIDE-LITE DETAIL
12	D	NARROW STILE SIDE-LITE SECTIONS
13	D	MEDIUM STILE SIDE-LITE DETAIL
14	D	MED & WIDE STILE SIDE-LITE SECTIONS
15	D	WIDE STILE SIDE-LITE DETAIL
16	D	MED & WIDE STILE SIDE-LITE SECTIONS
17	D	NARROW STILE ACTIVE-LITE DETAIL
18	D	NARROW STILE A-L & HORIZONTAL SECTIONS
19	D	MEDIUM STILE ACTIVE-LITE DETAIL
20	D	MED & WIDE STILE ACTIVE-LITE SECTIONS
21	D	WIDE STILE ACTIVE-LITE DETAIL
22	D	ADAMS RITE 8600 EXTRUSION DETAILS
23	D	ADAMS RITE 8600 EXTRUSION DETAILS
24	D	ADAMS RITE 8600 INSTALLATION DETAILS
25	D	ADAMS RITE 8600 INSTALLATION DETAILS
26	D	BILL OF MATERIALS

PROJECT NO. 413-0716

REV	DESCRIPTION	DATE	BY
E	ADDED STEEL/ALUMINUM SUBSTRATE ANCHORAGE	9/9/13	RJA
D	CORPORATE NAME CHANGE AND ADDITION OF NEW COSMETIC COMPONENT	12/14/12	RJA
C	UPDATED TO 2010 FBC	03/01/12	JBH

ASSA ABLOY ENTRANCE SYSTEMS US INC.
1900 AIRPORT ROAD
MONROE, NORTH CAROLINA 28110

TITLE: BESAM RESILIENCE FBO IMPACT DOOR SYSTEM
GENERAL NOTES AND DP TABLE

DRAWN BY: SMC
DATE: 02/09/10
SCALE: N.T.S.
DRAWING NO: BES0006
REV: E
SHEET: 1 OF 26

FTC Product Design Group, LLC
PO Box 530775
Longwood, FL 32752-0775
FBPE C.A. NO. 28935
Phone: 321.690.1788
Fax: 321.690.7789
Email: info@ftc-corp.com

PRODUCT REVISED
In complying with the Florida Building Code
Acceptance No. 13-0924.07
Expiration Date Nov 14, 2015
By Ishas L. Thomas
Miami Dade Product Control

Robert J. Amoruso, P.E.
Florida P.E. No. 49752

ROBERT JAMES AMORUSO
LICENSE
No 49752
9/19/13
STATE OF FLORIDA
PROFESSIONAL ENGINEER

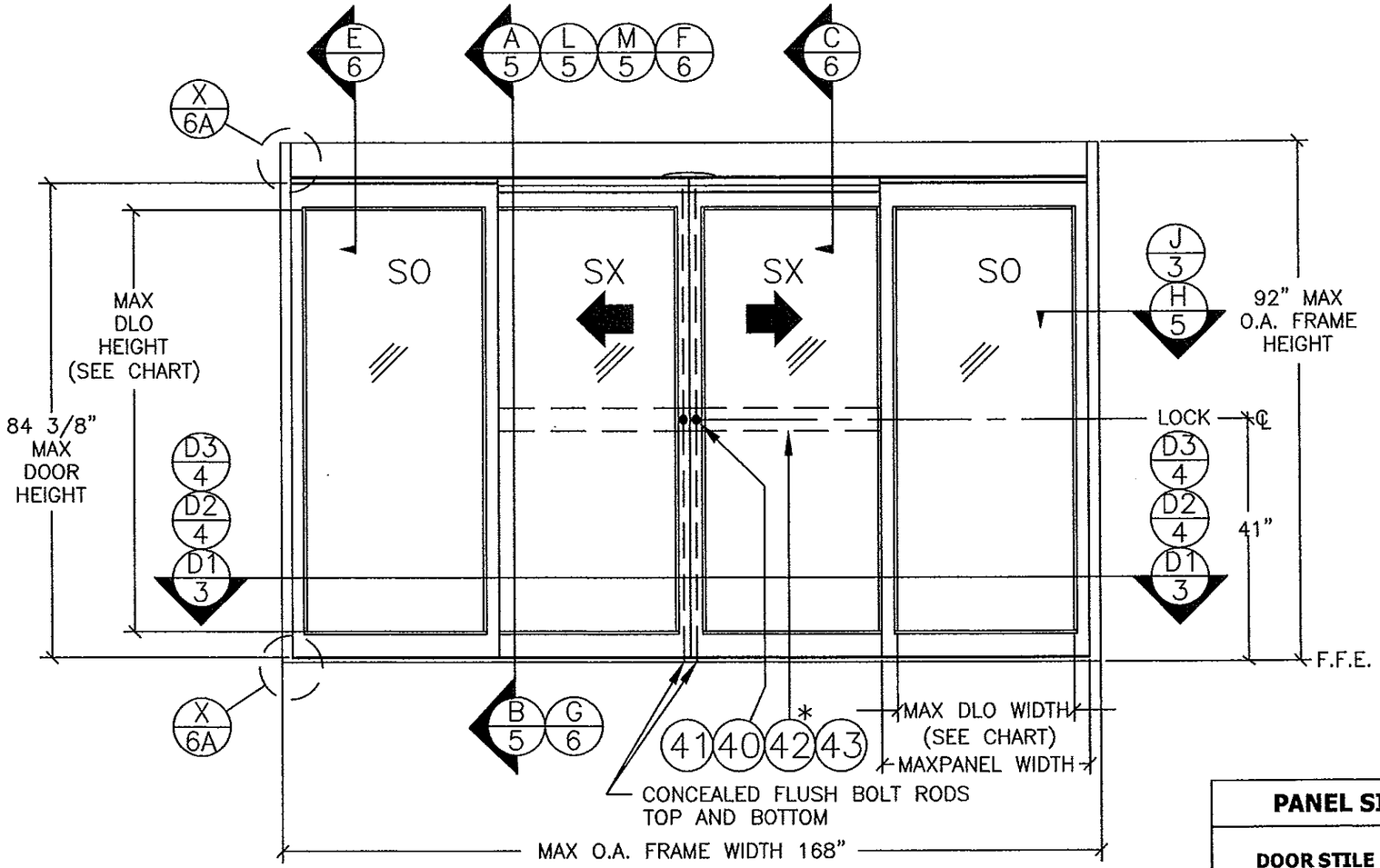

EXTERIOR ELEVATION

SEE SHEET 7 AND 7A FOR ANCHOR SPACING DETAILS.
* SEE SHEETS 22 & 23 FOR ITEM NO. 42, ADAMS RITE 8600 PANIC DEVICE EXTRUSION DETAILS AND SHEETS 24 & 25 FOR INSTALLATION DETAILS.

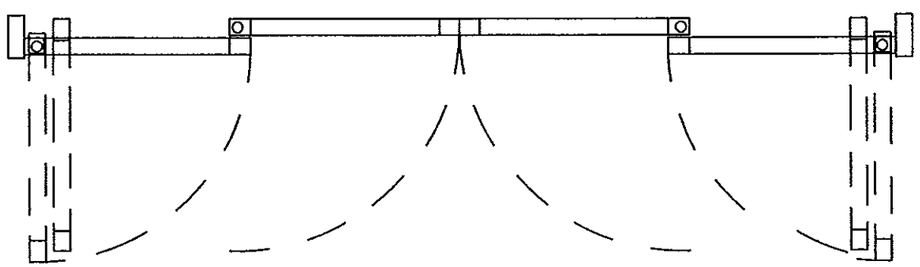

PLAN VIEW FULL BREAK OUT DETAIL

ACTIVE PANELS BREAK OUT FROM ANY POSITION

PANEL SIZE & DAYLITE OPENING CHART		
DOOR STILE	**MAXIMUM PANEL WIDTH**	**MAXIMUM DLO WIDTH**
NARROW	42 3/4"	36"
MEDIUM	43 5/8"	33 1/4"
WIDE	44 1/8"	31 3/4"
BOTTOM RAIL	**MAXIMUM PANEL HEIGHT**	**MAXIMUM DLO HEIGHT**
4"	84 3/8"	75 3/8"
5"	84 3/8"	74 3/8"
7"	84 3/8"	72 3/8"
10"	84 3/8"	69 3/8""

PROJECT NO. 413-0716

REV	DESCRIPTION	DATE	BY
E	ADDED STEEL/ALUMINUM SUBSTRATE ANCHORAGE	9/9/13	RJA
D	CORPORATE NAME CHANGE AND ADDITION OF NEW COSMETIC COMPONENT	12/14/12	RJA
C	UPDATED TO 2010 FBC	03/01/12	JBH

ASSA ABLOY ENTRANCE SYSTEMS US INC.
1900 AIRPORT ROAD
MONROE, NORTH CAROLINA 28110

TITLE: BESAM RESILIENCE FBO IMPACT DOOR SYSTEM EXTERIOR ELEVATION & BREAKOUT DETAIL

DRAWN BY: SMC
DATE: 02/09/10
SCALE: N.T.S.
DRAWING NO: BES0006
REV: E
SHEET: 2 OF 26

PTC Product Design Group, LLC
PO Box 620775
Longwood, FL 32752-0775
FBPE C.A. NO. 26935
Phone: 321.690.1788
Fax: 321.690.1789
Email: info@ptc-corp.com

PRODUCT REVISED
as complying with the Florida Building Code
Acceptance No 13-0924.07
Expiration Date 11/4/15
By Ishaq L. Chawla
Miami Dade Product Control

Robert J. Amoruso, P.E.
Florida P.E. No. 49752

ROBERT JAMES AMORUSO
LICENSE
No 49752
9/19/13
STATE OF FLORIDA
PROFESSIONAL ENGINEER

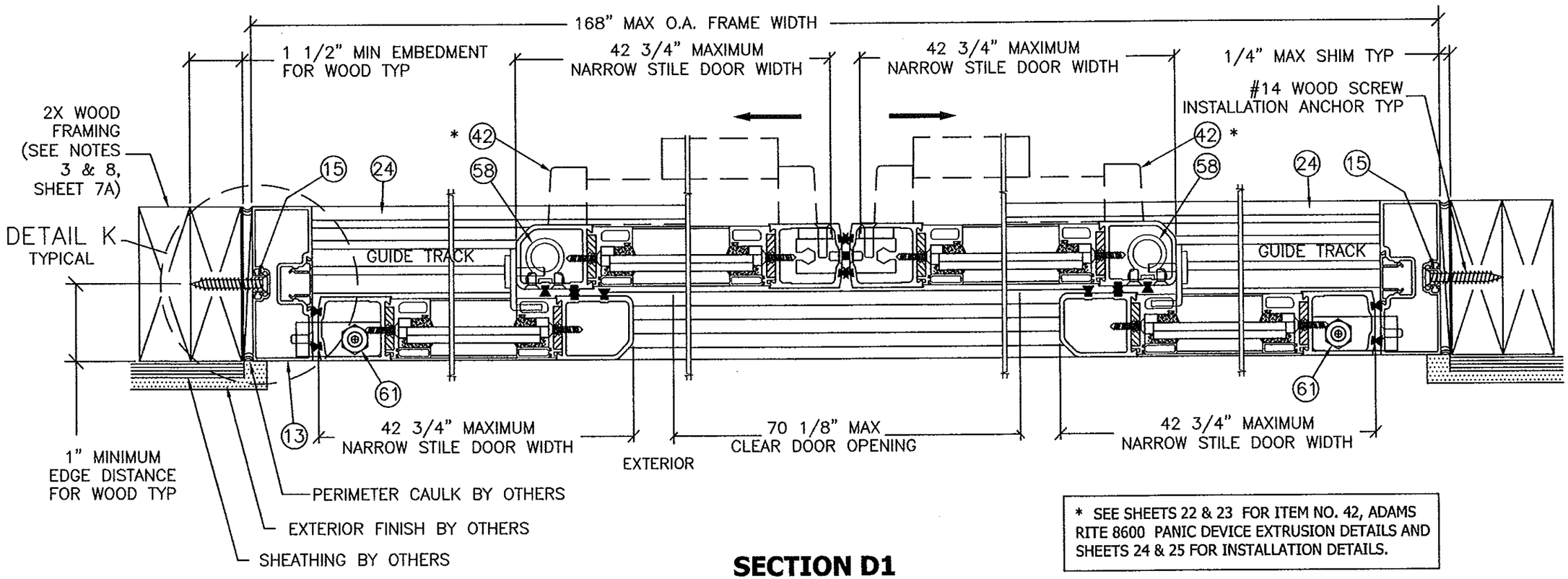

* SEE SHEETS 22 & 23 FOR ITEM NO. 42, ADAMS RITE 8600 PANIC DEVICE EXTRUSION DETAILS AND SHEETS 24 & 25 FOR INSTALLATION DETAILS.

SECTION D1

PLAN VIEW

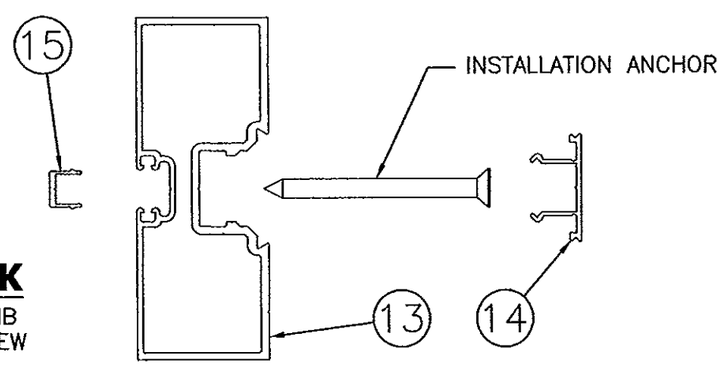

DETAIL K

TYPICAL JAMB EXPLODED VIEW

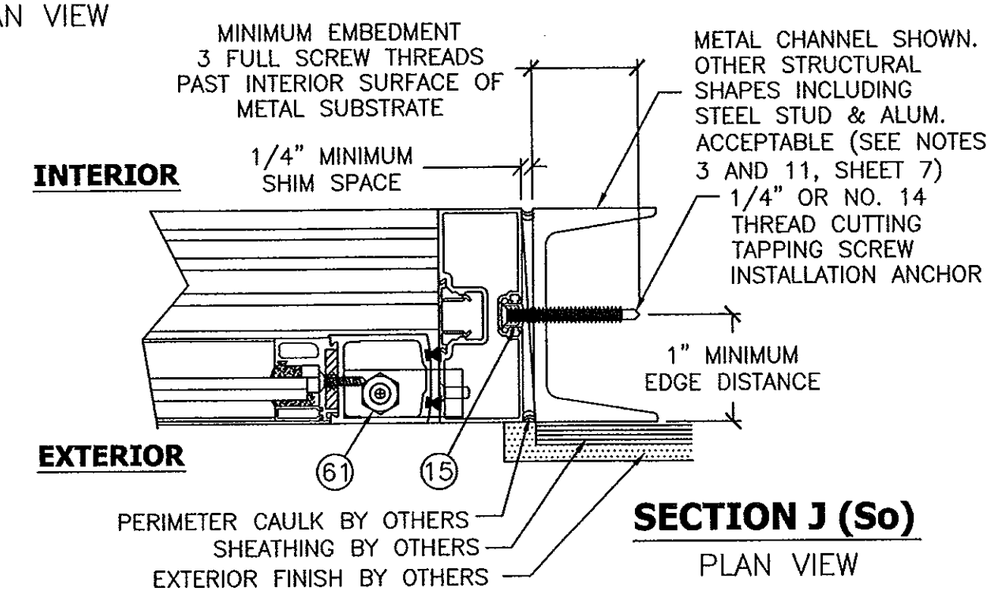

SECTION J (So)

PLAN VIEW

PROJECT NO. 413-0716

REV	DESCRIPTION	DATE	BY
E	ADDED STEEL/ALUMINUM SUBSTRATE ANCHORAGE	9/9/13	RJA
D	CORPORATE NAME CHANGE AND ADDTION OF NEW COSMETIC COMPONENT	12/14/12	RJA
C	UPDATED TO 2010 FBC	03/01/12	JBH

ASSA ABLOY ENTRANCE SYSTEMS US INC.
1900 AIRPORT ROAD
MONROE, NORTH CAROLINA 28110

TITLE: BESAM RESILIENCE FBO IMPACT DOOR SYSTEM HORIZONTAL SECTION, NARROW STILE & JAMB DETAIL

DRAWN BY: SMC | DATE: 02/09/10
SCALE: N.T.S. | DRAWING NO: BES0006
REV: E | SHEET: 3 OF 26

PTC Product Design Group, LLC
PO Box 532775
Longwood, FL 32752-0775
FBPE C.A. NO. 26935
Phone: 321.690.1788
Fax: 321.690.1789
Email: info@ptc-corp.com

PRODUCT REVISED
as complying with the Florida Building Code
Acceptance No 13-0924.07
Expiration Date 11/4/15
By Ishag J. Chand
Miami Dade Product Control

Robert J. Amoruso, P.E.
Florida P.E. No. 49752

ROBERT JAMES AMORUSO
LICENSE
No 49752
STATE OF FLORIDA
PROFESSIONAL ENGINEER
9/19/13

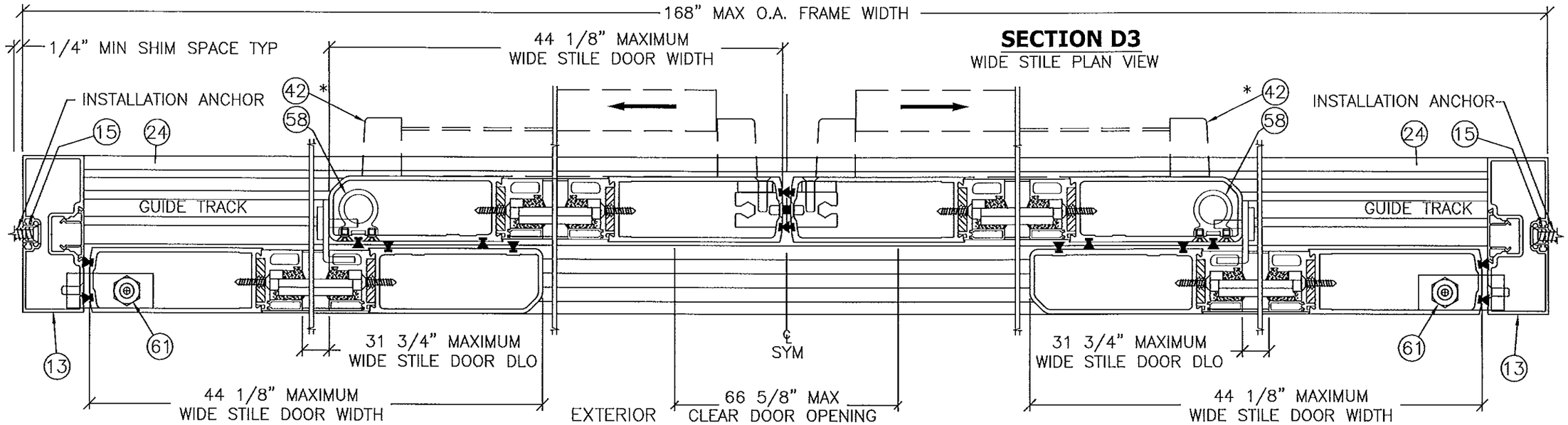

* SEE SHEETS 22 & 23 FOR ITEM NO. 42, ADAMS RITE 8600 PANIC DEVICE EXTRUSION DETAILS AND SHEETS 24 & 25 FOR INSTALLATION DETAILS.

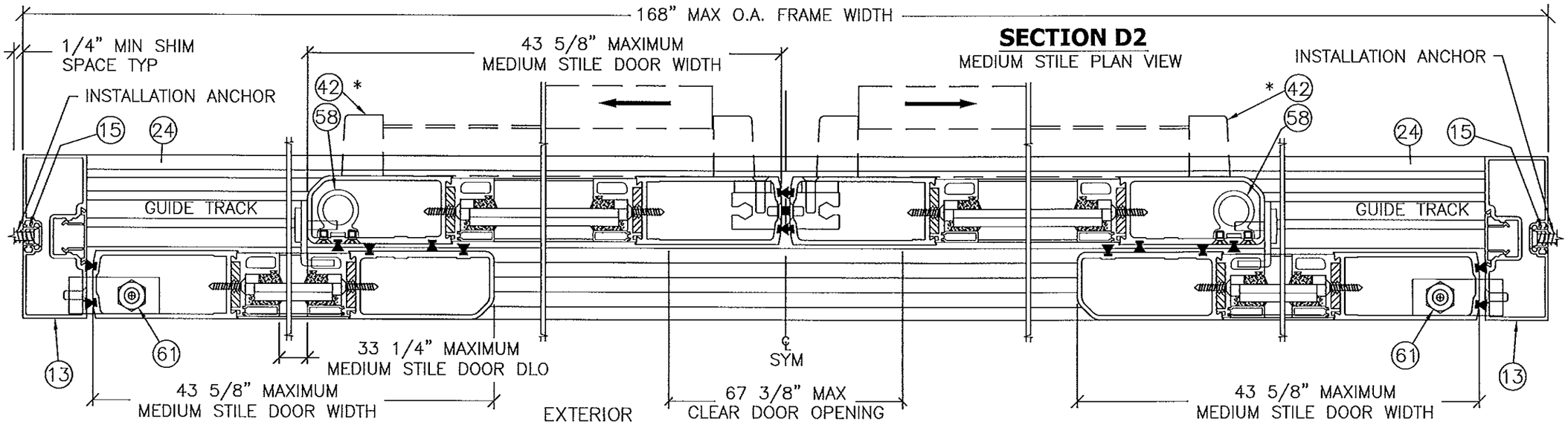

PROJECT #412-1016

REV	DESCRIPTION	DATE	BY
D	CORPORATE NAME CHANGE AND ADDTION OF NEW COSMETIC COMPONENT	12/14/12	RJA
C	UPDATED TO 2010 FBC	03/01/12	JBH
B	INCORPORATE MD-BCCO RFI COMMENTS	09/17/10	DAW

ASSA ABLOY ENTRANCE SYSTEMS US INC.
1900 AIRPORT ROAD
MONROE, NORTH CAROLINA 28110

TITLE: BESAM RESILIENCE FBO IMPACT DOOR SYSTEM HORIZONTAL SECTIONS, MED & WIDE STILE

DRAWN BY: SMC
DATE: 02/09/10
SCALE: N.T.S.
DRAWING NO: BES0006
REV: D
SHEET: 4 OF 26

PTC Product Design Group, LLC
PO Box 520775
Longwood, FL 32752-0775
FBPE C.A. NO. 25935
Phone: 321.680.1788
Fax: 321.680.1789
Email: info@ptc-corp.com

PRODUCT REVISED
as complying with the Florida Building Code
Acceptance No 13-0924.07
Expiration Date 11/4/15
By [signature]
Miami Dade Product Control

Robert J. Amoruso, P.E.
Florida P.E. No. 49752

ROBERT JAMES AMORUSO
LICENSE
No 49752
9/19/13
STATE OF FLORIDA
PROFESSIONAL ENGINEER

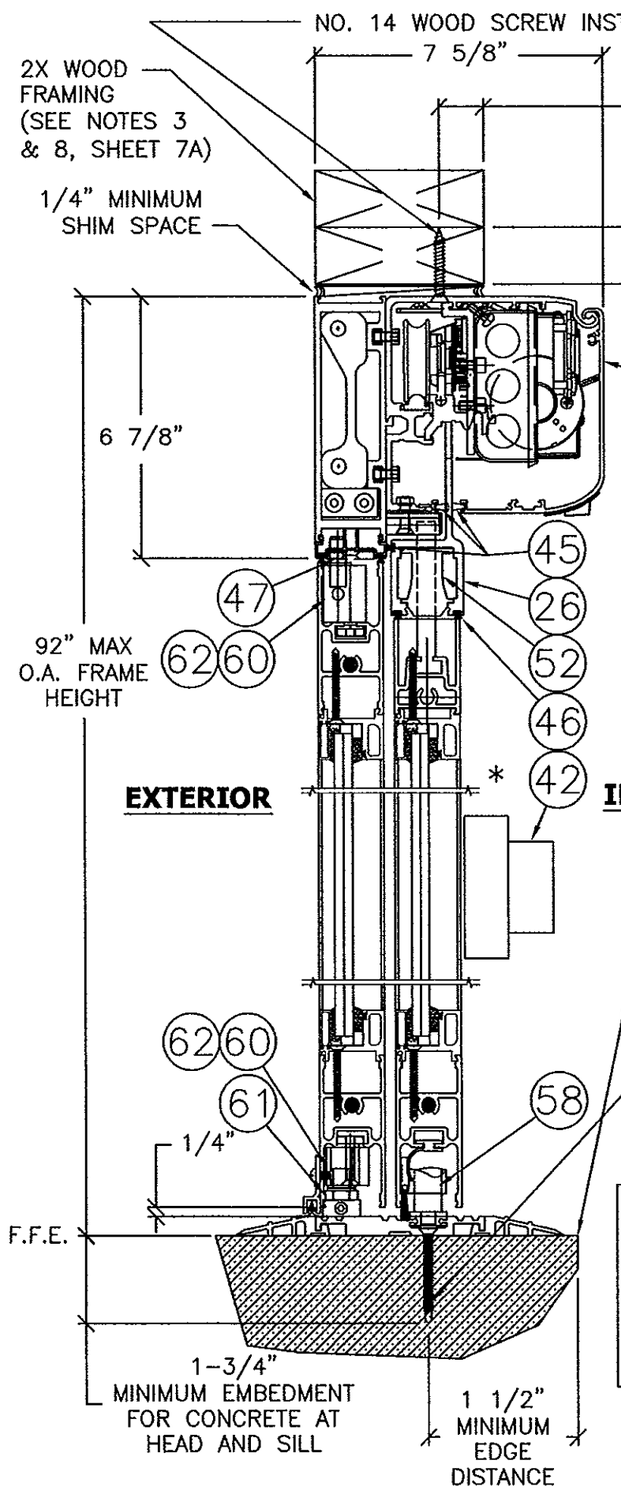

SECTION A
HEADER

* SEE SHEETS 22 & 23 FOR ITEM NO. 42, ADAMS RITE 8600 PANIC DEVICE EXTRUSION DETAILS AND SHEETS 24 & 25 FOR INSTALLATION DETAILS.

SECTION B
THRESHOLD

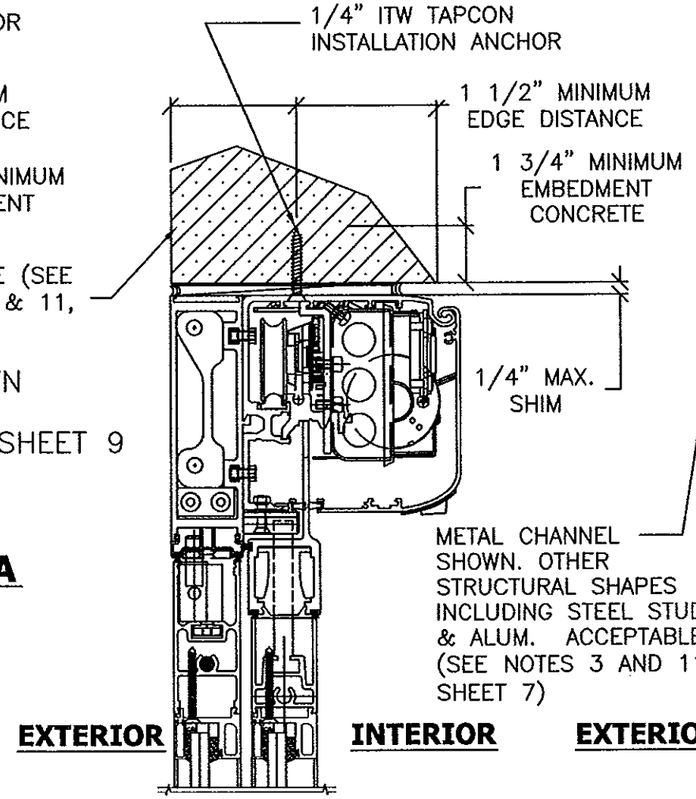

SECTION L
HEADER

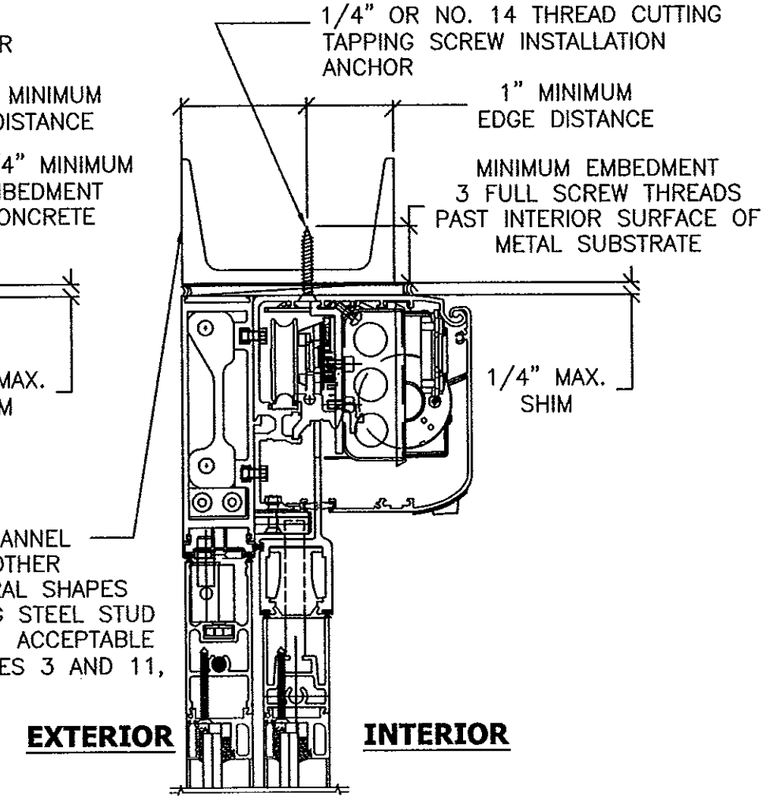

SECTION M
HEADER

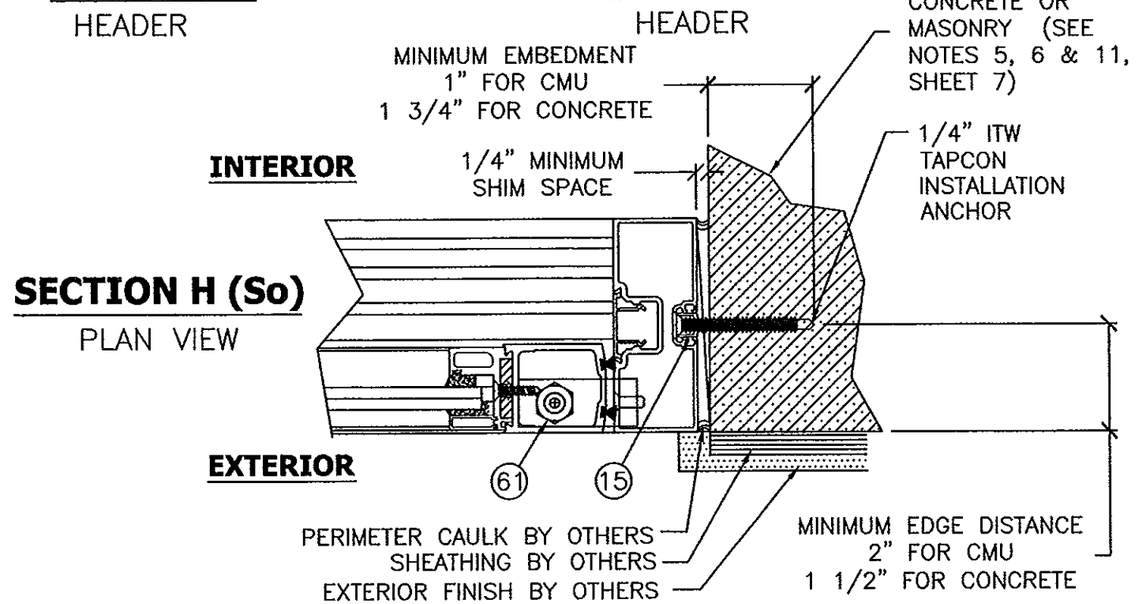

SECTION H (So)
PLAN VIEW

REV	DESCRIPTION	DATE	BY
E	ADDED STEEL/ALUMINUM SUBSTRATE ANCHORAGE	9/9/13	RJA
D	CORPORATE NAME CHANGE AND ADDITION OF NEW COSMETIC COMPONENT	12/14/12	RJA
C	UPDATED TO 2010 FBC	03/01/12	JBH

PROJECT NO. 413-0716

ASSA ABLOY ENTRANCE SYSTEMS US INC.
1900 AIRPORT ROAD
MONROE, NORTH CAROLINA 28110

TITLE: BESAM RESILIENCE FBO IMPACT DOOR SYSTEM
HORIZONTAL & VERTICAL SECTIONS

DRAWN BY: SMC
DATE: 02/09/10
SCALE: N.T.S.
DRAWING NO: BES0006
REV: E
SHEET: 5 OF 26

PTC Product Design Group, LLC
PO Box 520775
Longwood, FL 32752-0775
PSPE C.A. NO. 26836
Phone: 321.690.1788
Fax: 321.690.1789
Email: info@ptc-corp.com

PRODUCT REVISED
as complying with the Florida Building Code
Acceptance No. 13-0924.07
Expiration Date 11/14/15
By [illegible]
Miami Dade Product Control

Robert J. Amoruso, P.E.
Florida P.E. No. 49752

ROBERT JAMES AMORUSO
LICENSE
No 49752
9/9/13
STATE OF FLORIDA
PROFESSIONAL ENGINEER

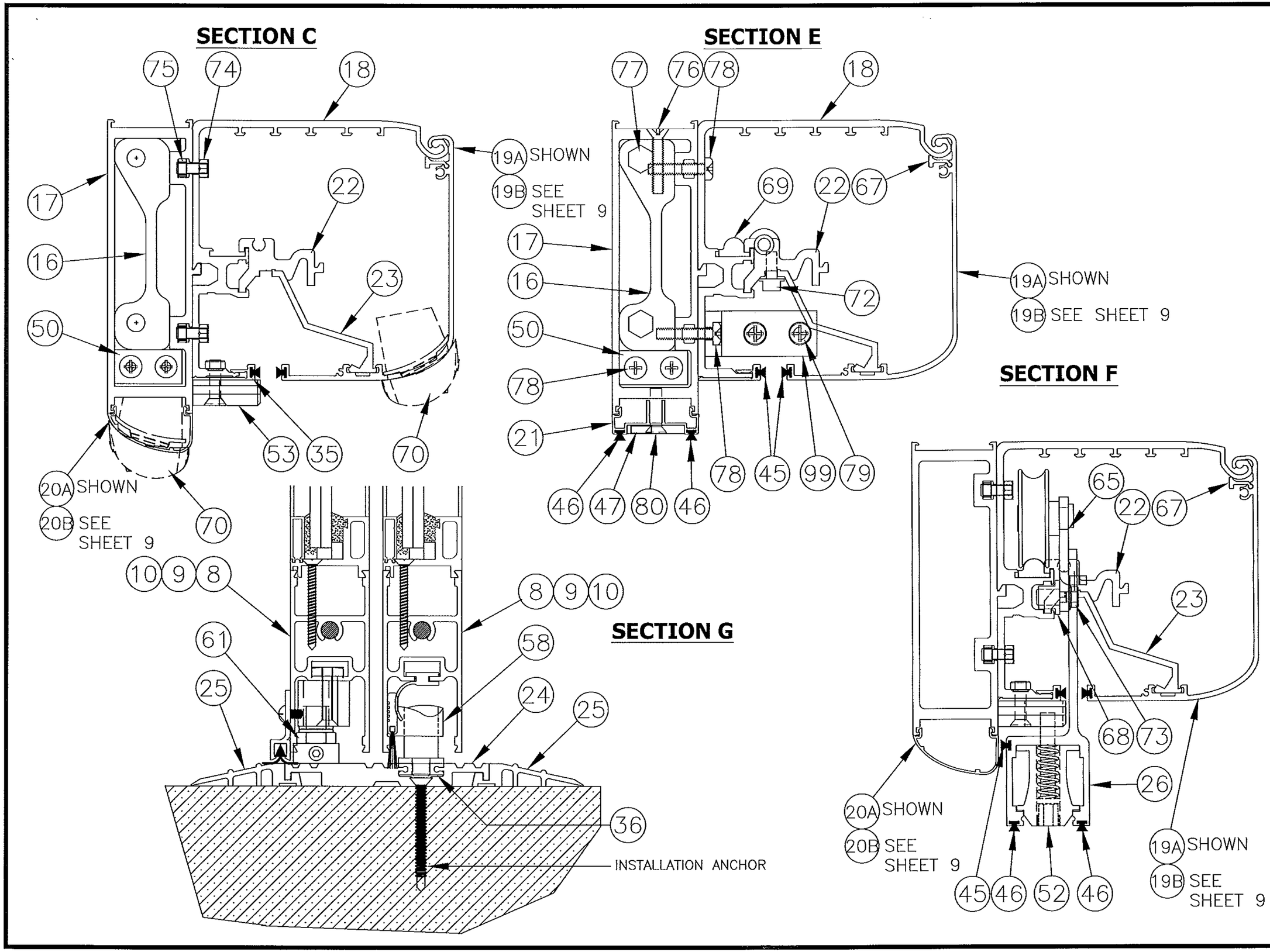

PROJECT #412-1016

REV	DESCRIPTION	DATE	BY
D	CORPORATE NAME CHANGE AND ADDTION OF NEW COSMETIC COMPONENT	12/14/12	RJA
C	UPDATED TO 2010 FBC	03/01/12	JBH
B	INCORPORATE MD-BCCO RFI COMMENTS	09/17/10	DAW

ASSA ABLOY ENTRANCE SYSTEMS US INC.
1900 AIRPORT ROAD
MONROE, NORTH CAROLINA 28110

TITLE: BESAM RESILIENCE FBO IMPACT DOOR SYSTEM HEADER AND THRESHOLD SECTIONS

DRAWN BY: SMC
DATE: 02/09/10
SCALE: N.T.S.
DRAWING NO: BES0006
REV: D
SHEET: 6 OF 26

PTC Product Design Group, LLC
PO Box 520775
Longwood, FL 32752-0775
FBPE C.A. NO. 25935
Phone: 321.690.1788
Fax: 321.690.1789
Email: info@ptc-corp.com

PRODUCT REVISED
as complying with the Florida
Building Code
Acceptance No 13-0524.07
Expiration Date 11/4/15
By [signature]
Miami Code Product Control

Robert J. Amoruso, P.E.
Florida P.E. No. 49752

ROBERT JAMES AMORUSO
LICENSE
No 49752
9/19/13
STATE OF
FLORIDA
PROFESSIONAL ENGINEER

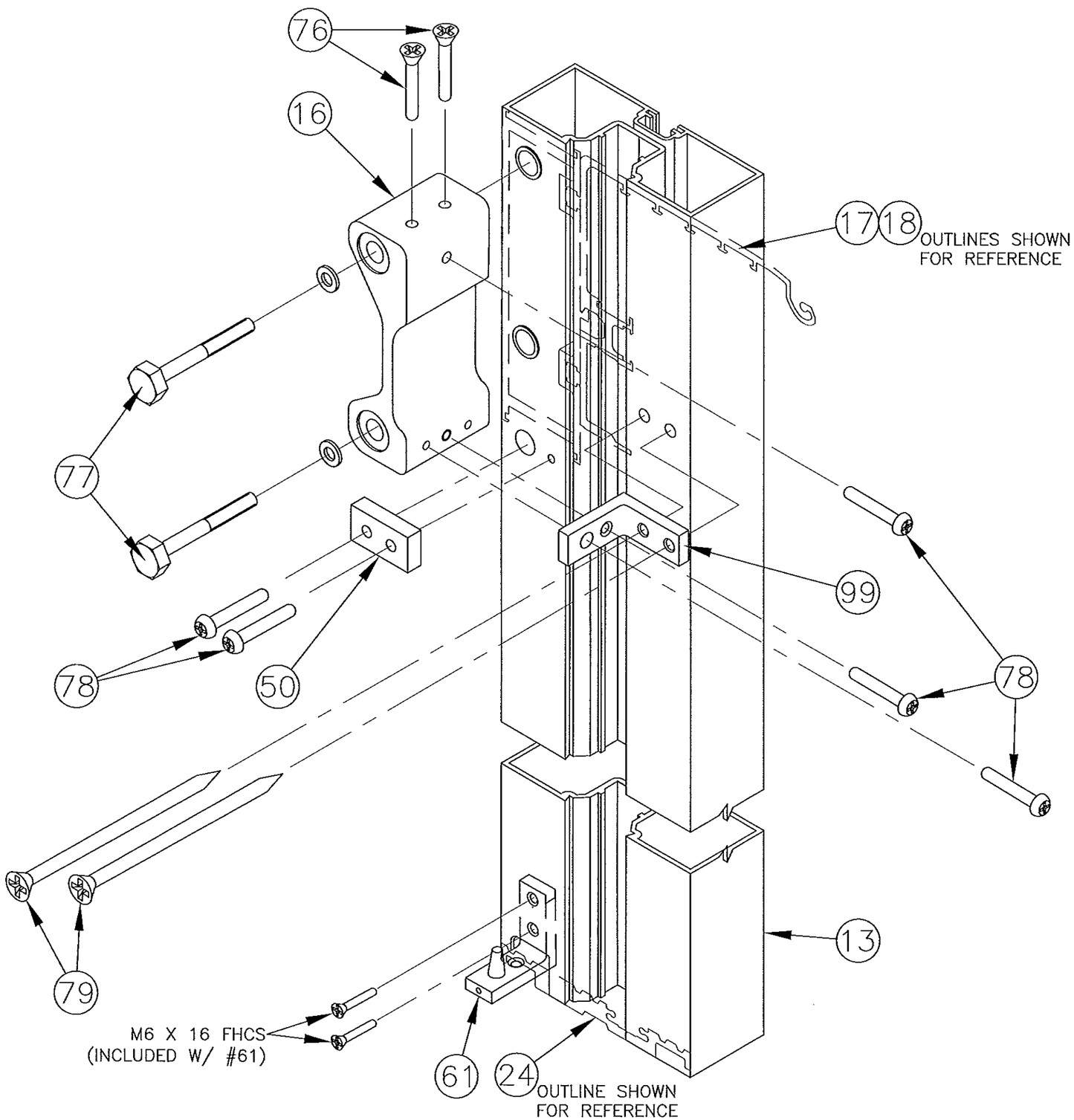

PROJECT #412-1016

REV	DESCRIPTION	DATE	BY
D	CORPORATE NAME CHANGE AND ADDITION OF NEW COSMETIC COMPONENT	12/14/12	RJA
C	UPDATED TO 2010 FBC	03/01/12	JBH
B	INCORPORATE MD-BCCO RFI COMMENTS	09/17/10	DAW

ASSA ABLOY ENTRANCE SYSTEMS US INC.
1900 AIRPORT ROAD
MONROE, NORTH CAROLINA 28110

BESAM RESILIENCE FBO IMPACT DOOR SYSTEM
JAMB ASSEMBLY DETAIL

TITLE:

DRAWN BY: SMC
DATE: 02/09/10
SCALE: N.T.S.
DRAWING NO: BES0006
REV: D
SHEET: 6A OF 26

PTC Product Design Group, LLC
P.O. Box 32752
Longwood, FL 32752-0775
FBPE C.A. NO. 25935
Phone: 321.690.1788
Fax: 321.690.1788
Email: info@ptc-corp.com

PRODUCT REVISED
as complying with the Florida
Building Code
Acceptance No 13-0924.07
Expiration Date 4/14/15
By Ishaq I. Chanda
Miami Dade Product Control

Robert J. Amoruso, P.E.
Florida P.E. No. 49752

ROBERT JAMES AMORUSO
LICENSE
No 49752
9/19/13
STATE OF
FLORIDA
PROFESSIONAL ENGINEER

ANCHORING DETAIL - CONCRETE AT HEAD, SILL OR JAMBS; CMU AT JAMBS AND METAL SUBSTRATES AT THE HEAD AND JAMBS

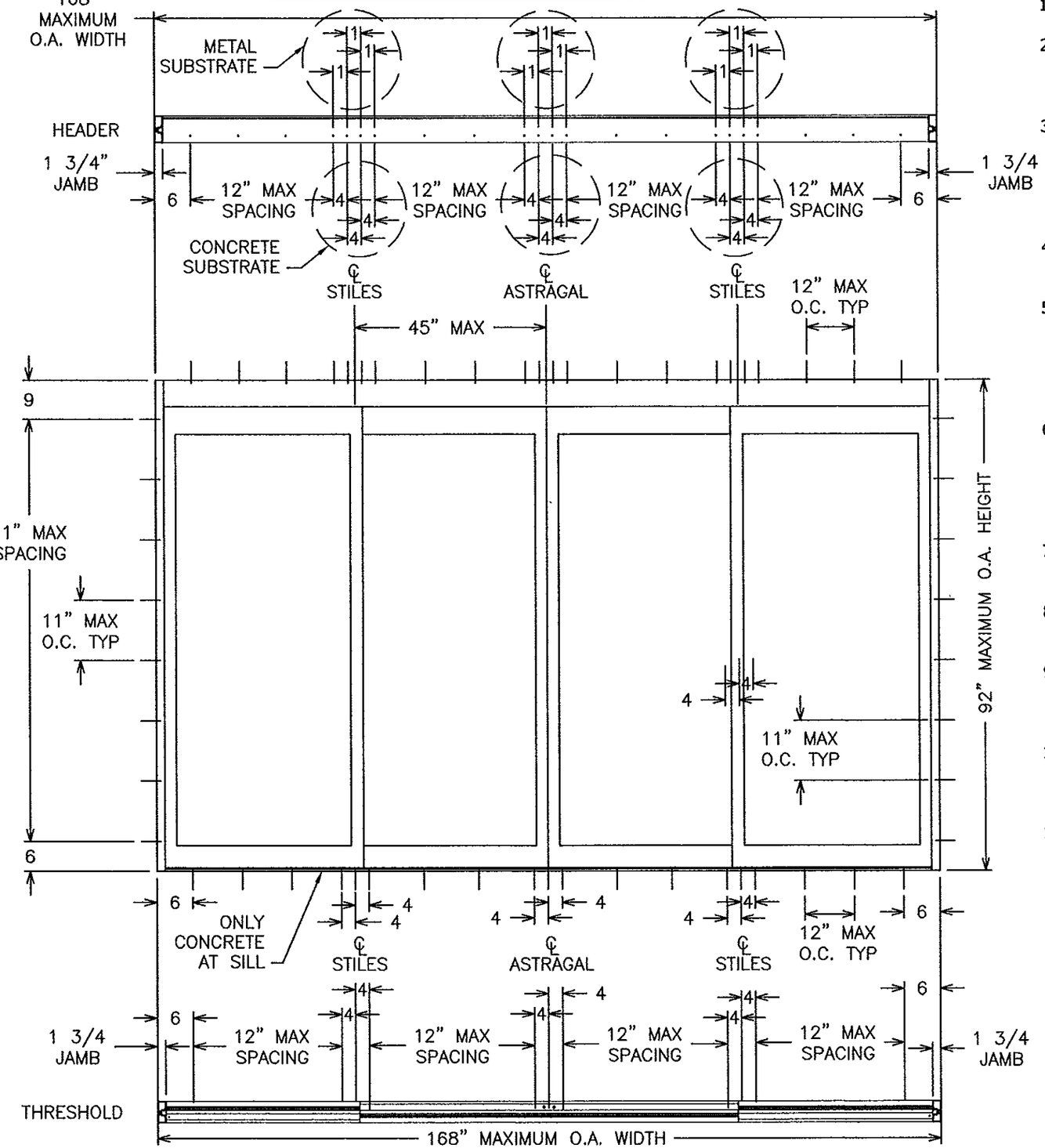

INSTALLATION NOTES

1. ONE (1) INSTALLATION ANCHOR IS REQUIRED AT EACH ANCHOR LOCATION SHOWN.
2. SHIM AS REQUIRED AT EACH ANCHOR LOCATION WITH LOAD BEARING SHIMS. MAXIMUM ALLOWABLE SHIM SPACE IS 1/4". SHIM WHERE SPACE OF 1/16" OR GREATER OCCURS. SHIMS SHALL BE CONSTRUCTED OF HIGH DENSITY PLASTIC OR BETTER.
3. FOR INSTALLATION INTO METAL FRAMING SUBSTRATES (SEE NOTE 11 BELOW) AT THE HEAD AND JAMBS: USE 1/4" OR #14 STAINLESS STEEL SELF-DRILLING TAPPING SCREWS OF SUFFICIENT LENGTH TO ACHIEVE A MINIMUM EMBEDMENT OF THREE (3) FULL THREADS PAST THE INTERIOR SURFACE OF THE SUBSTRATE WITH MINIMUM EDGE DISTANCE AND SPACING OF 1".
4. 1/4" OR #14 STAINLESS STEEL SELF-DRILLING TAPPING SCREWS SHALL BE PER ASME B18.6.4 AND HAVE MINIMUM STRENGTH PROPERTIES EQUIVALENT TO GRADE 5 STEEL.
5. FOR INSTALLATION THROUGH 1X WOOD BUCK PROPERLY SECURED INTO CONCRETE OR DIRECTLY INTO CONCRETE WITHOUT A WOOD BUCK AT HEAD SILL OR JAMBS: USE 1/4" ITW TAPCONS (ADVANCED THREADFORM TECHNOLOGY) OF SUFFICIENT LENGTH TO ACHIEVE 1 3/4" MINIMUM EMBEDMENT INTO CONCRETE WITH A 1 1/2" MINIMUM EDGE DISTANCE AND MINIMUM SPACING OF 4"
6. FOR INSTALLATION THROUGH 1X WOOD BUCK PROPERLY SECURED INTO MASONRY (CMU) OR DIRECTLY INTO MASONRY (CMU) WITHOUT A WOOD BUCK AT JAMBS: USE 1/4" ITW TAPCONS (ADVANCED THREADFORM TECHNOLOGY) OF SUFFICIENT LENGTH TO ACHIEVE 1" MINIMUM EMBEDMENT INTO CMU WITH A 2" MINIMUM EDGE DISTANCE AND MINIMUM SPACING OF 4".
7. MINIMUM EMBEDMENT AND EDGE DISTANCE EXCLUDE WALL FINISHES. (INCLUDING BUT NOT LIMITED TO STUCCO, FOAM, BRICK VENEER AND SIDING)
8. INSTALLATION ANCHORS AND ASSOCIATED HARDWARE MUST BE MADE OF CORROSION RESISTANT MATERIAL OR HAVE A CORROSION RESISTANT COATING.
9. FOR INSTALLATION OF JAMB INTO HOLLOW BLOCK AND GROUT FILLED BLOCK, DO NOT PLACE INSTALLATION ANCHORS INTO MORTAR JOINTS. EDGE DISTANCE IS MEASURED FROM FREE EDGE OF BLOCK OR EDGE OF MORTAR JOINT INTO FACE SHELL OF BLOCK.
10. ANCHORS SHALL BE INSTALLED IN ACCORDANCE WITH MANUFACTURER'S INSTALLATION INSTRUCTIONS. ANCHORS SHALL NOT BE USED IN SUBSTRATES WITH STRENGTHS LESS THAN THE MINIMUM STRENGTH SPECIFIED IN NOTE 11 BELOW.
11. INSTALLATION ANCHOR CAPACITIES FOR PRODUCTS HEREIN ARE BASED ON SUBSTRATE MATERIALS WITH THE FOLLOWING PROPERTIES:
    - 11.1. CONCRETE - MINIMUM COMPRESSIVE STRENGTH OF 2500 PSI.
    - 11.2. MASONRY - STRENGTH CONFORMING TO ASTM C-90 WITH A MEDIUM DENSITY > 117 PCF, MIN. COMP. STRENGTH OF 1900 PSI.
    - 11.3. STEEL STUD WITH MINIMUM 16 GA. (0.0566") THICKNESS AND Ftu = 45 KSI AND Fty = 33 KSI..
    - 11.4. ALUMINUM OR STEEL WITH A MINIMUM 1/8" THICKNESS AND Ftu = 22 KSI AND Fty = 16 KSI.

PROJECT NO. 413-0716

REV	DESCRIPTION	DATE	BY
E	ADDED STEEL/ALUMINUM SUBSTRATE ANCHORAGE	9/8/13	RJA
D	CORPORATE NAME CHANGE AND ADDITION OF NEW COSMETIC COMPONENT	12/14/12	RJA
C	UPDATED TO 2010 FBC	03/01/12	JBH

ASSA ABLOY ENTRANCE SYSTEMS US INC.
1900 AIRPORT ROAD
MONROE, NORTH CAROLINA 28110

TITLE: BESAM RESILIENCE FBO IMPACT DOOR SYSTEM
ANCHOR DETAILS & INSTALLATION NOTES

DRAWN BY: SMC
DATE: 02/09/10
SCALE: N.T.S.
DRAWING NO: BES0006
REV: E
SHEET: 7 OF 26

PTC Product Design Group, LLC
PO Box 520775
Longwood, FL 32752-0775
FBPE C.A. NO. 25835
Phone: 321.690.1788
Fax: 321.690.1789
Email: info@ptc-corp.com

PRODUCT REVISED
as complying with the Florida
Building Code
Acceptance No. 13-0924.07
Expiration Date 11/14/15
By [signature]
Miami-Dade Product Control

Robert J. Amoruso, P.E.
Florida P.E. No. 49752

ROBERT JAMES AMORUSO
LICENSE
No 49752
9/19/13
STATE OF
FLORIDA
PROFESSIONAL ENGINEER

ANCHORING DETAIL
WOOD SUBSTRATES AT HEAD AND JAMBS / CONCRETE AT SILL

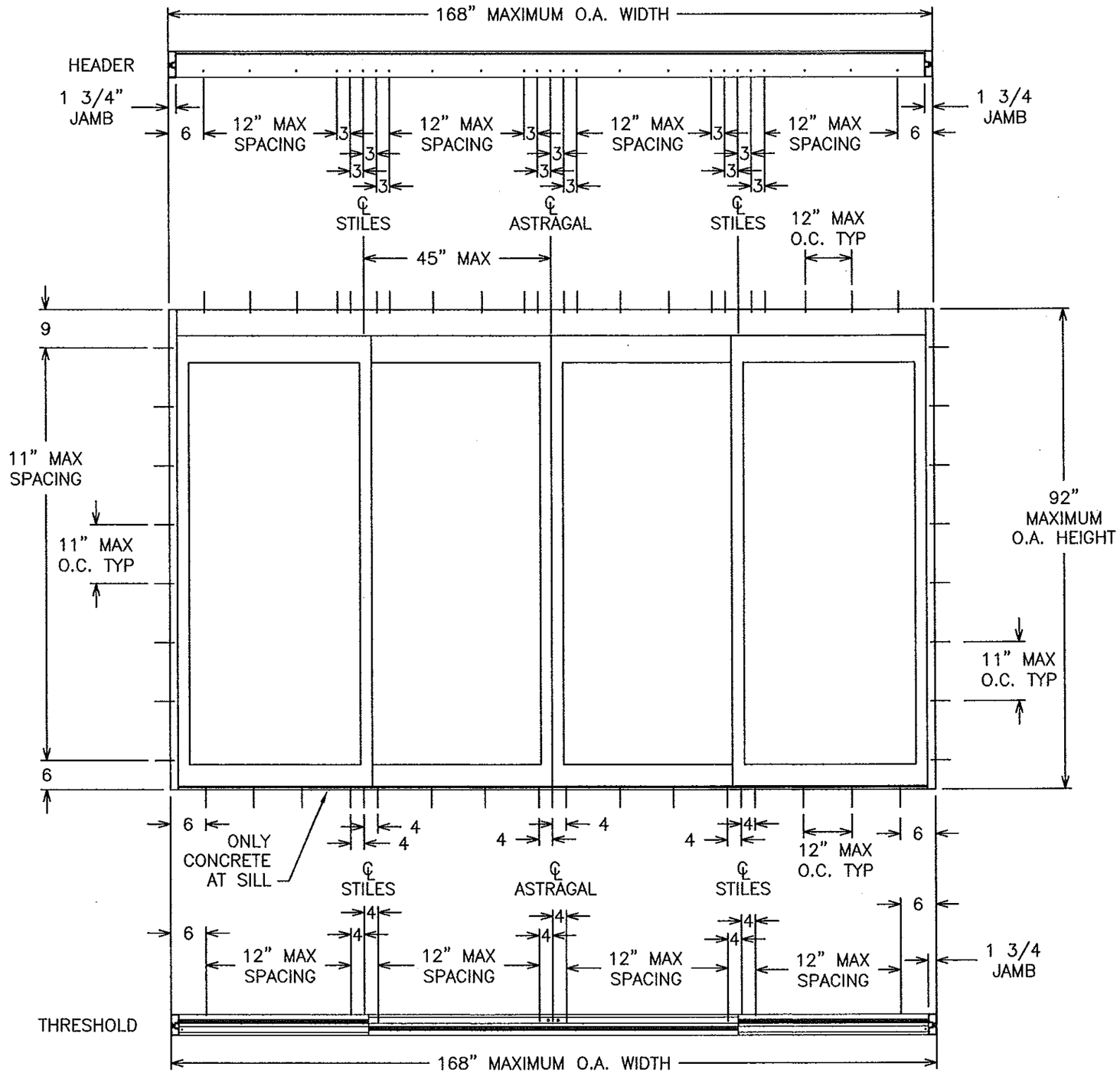

INSTALLATION NOTES

1. ONE (1) INSTALLATION ANCHOR IS REQUIRED AT EACH ANCHOR LOCATION SHOWN.
2. SHIM AS REQUIRED AT EACH ANCHOR LOCATION WITH LOAD BEARING SHIMS. MAXIMUM ALLOWABLE SHIM SPACE IS 1/4". SHIM WHERE SPACE OF 1/16" OR GREATER OCCURS. SHIMS SHALL BE CONSTRUCTED OF HIGH DENSITY PLASTIC OR BETTER.
3. FOR INSTALLATION INTO WOOD FRAMING AT THE HEAD AND JAMBS, USE #14 STAINLESS STEEL WOOD SCREWS OF SUFFICIENT LENGTH TO ACHIEVE 1 1/2" MINIMUM EMBEDMENT WITH AN EDGE DISTANCE OF 1" MINIMUM.
4. FOR INSTALLATION DIRECTLY INTO CONCRETE AT THE SILL, USE 1/4" ITW TAPCONS (ADVANCED THREADFORM TECHNOLOGY) OF SUFFICIENT LENGTH TO ACHIEVE 1 3/4" MINIMUM EMBEDMENT INTO CONCRETE WITH A 1 1/2" MINIMUM EDGE DISTANCE FOR CONCRETE AND MINIMUM SPACING OF 4'
5. MINIMUM EMBEDMENT AND EDGE DISTANCE EXCLUDE WALL FINISHES. (INCLUDING BUT NOT LIMITED TO STUCCO, FOAM, BRICK VENEER AND SIDING)
6. INSTALLATION ANCHORS AND ASSOCIATED HARDWARE MUST BE MADE OF CORROSION RESISTANT MATERIAL OR HAVE A CORROSION RESISTANT COATING.
7. ANCHORS SHALL BE INSTALLED IN ACCORDANCE WITH MANUFACTURER'S INSTALLATION INSTRUCTIONS. ANCHORS SHALL NOT BE USED IN SUBSTRATES WITH STRENGTHS LESS THAN THE MINIMUM STRENGTH SPECIFIED IN #8 BELOW.
8. INSTALLATION ANCHOR CAPACITIES FOR PRODUCTS HEREIN ARE BASED ON SUBSTRATE MATERIALS WITH THE FOLLOWING PROPERTIES:
   - A) WOOD - MINIMUM SPECIFIC GRAVITY OF 0.55
   - B) CONCRETE - MINIMUM COMPRESSIVE STRENGTH OF 2500 PSI

PROJECT NO. 413-0716

REV	DESCRIPTION	DATE	BY
E	ADDED STEEL/ALUMINUM SUBSTRATE ANCHORAGE	9/9/13	RJA
D	CORPORATE NAME CHANGE AND ADDITION OF NEW COSMETIC COMPONENT	12/14/12	RJA
C	UPDATED TO 2010 FBC	03/01/12	JBH

ASSA ABLOY ENTRANCE SYSTEMS US INC.
1900 AIRPORT ROAD
MONROE, NORTH CAROLINA 28110

TITLE: BESAM RESILIENCE FBO IMPACT DOOR SYSTEM
ANCHOR DETAILS & INSTALLATION NOTES

DRAWN BY: SMC
DATE: 02/09/10
SCALE: N.T.S.
DRAWING NO: BES0006
REV: E
SHEET: 7A OF 26

PTC Product Design Group, LLC
PO Box 520775
Longwood, FL 32752-0775
FBPE C.A. NO. 26026
Phone: 321.690.1788
Fax: 321.690.1789
Email: info@ptc-corp.com

PRODUCT REVISED
as complying with the Florida Building Code
Acceptance No 13-0924.07
Expiration Date 11/4/15
By [illegible]
Miami Dade Product Control

Robert J. Amoruso, P.E.
Florida P.E. No. 49752

ROBERT JAMES AMORUSO
LICENSE
No 49752
9/9/13
STATE OF FLORIDA
PROFESSIONAL ENGINEER

TYPICAL GLAZING CROSS SECTION

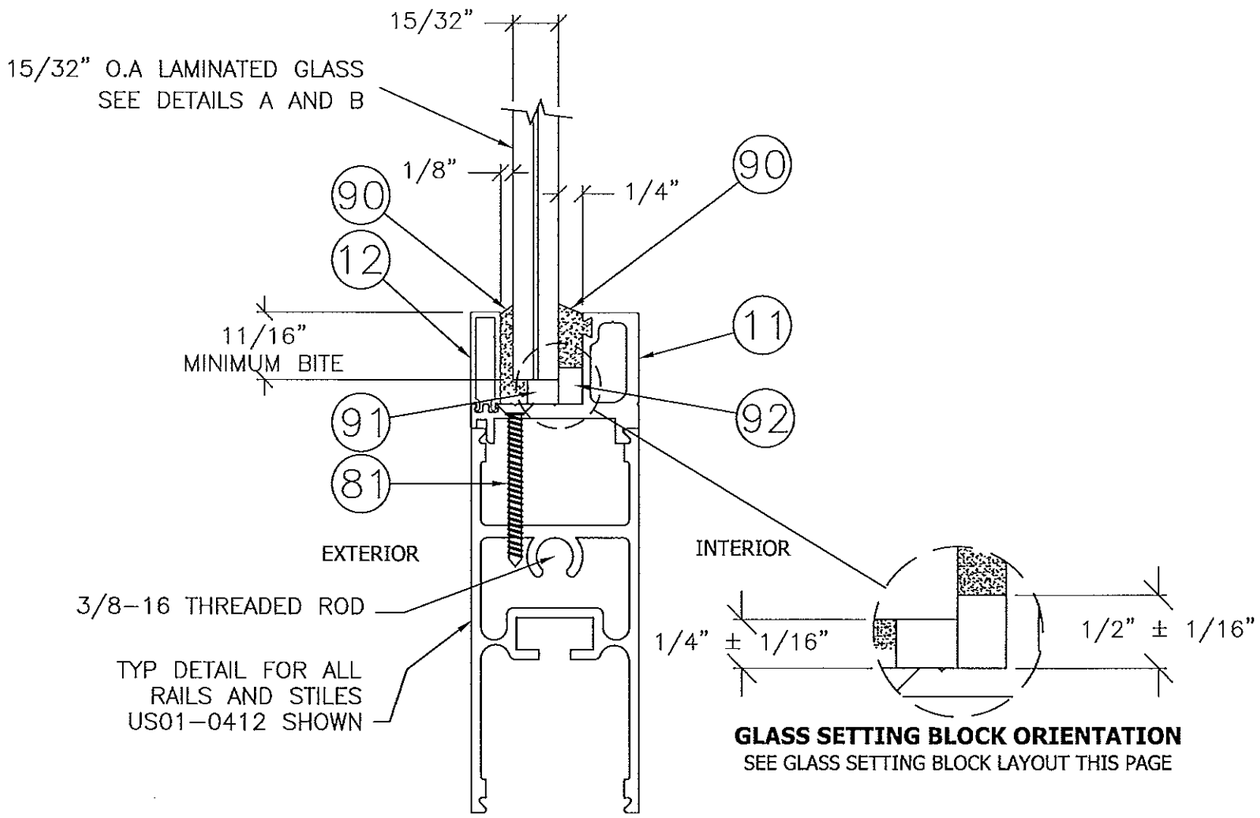

GLASS SETTING BLOCK ORIENTATION
SEE GLASS SETTING BLOCK LAYOUT THIS PAGE

GLASS SETTING BLOCK LAYOUT

PLACE BLOCKS AS SHOWN. LOCATE 12" FROM EACH END AND CENTERED ON EACH STILE. 20 BLOCKS REQUIRED FOR EACH PANEL.

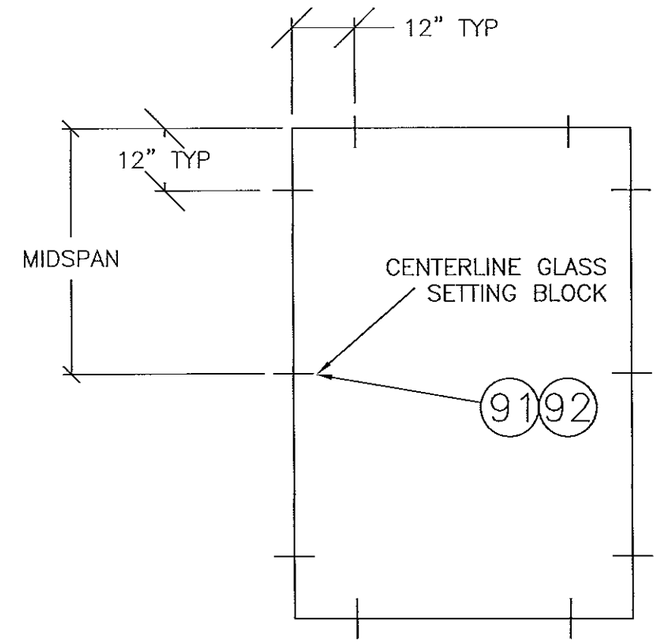

GLAZING DETAIL A

15/32" O.A. LAMINATED IMPACT GLASS CONSISTING OF:
3/16" CLEAR HEAT STRENGTHENED GLASS,
.090" SAFLEX PVB INTERLAYER BY SOLUTIA,
3/16" CLEAR HEAT STRENGTHENED GLASS.

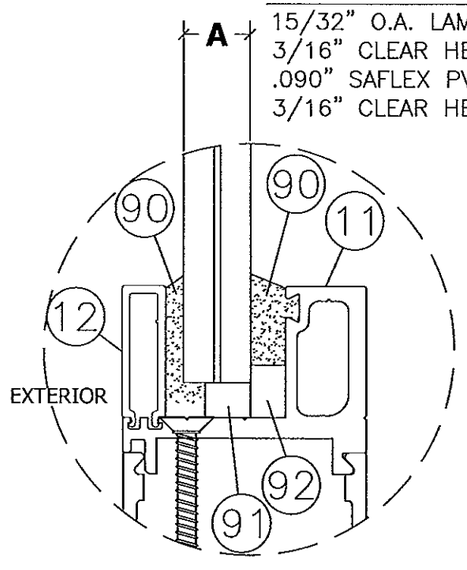

GLAZING DETAIL B

15/32" O.A. LAMINATED IMPACT GLASS CONSISTING OF:
3/16" CLEAR HEAT STRENGTHENED GLASS,
.090" SENTRYGLASS PLUS INTERLAYER BY DUPONT,
3/16" CLEAR HEAT STRENGTHENED GLASS.

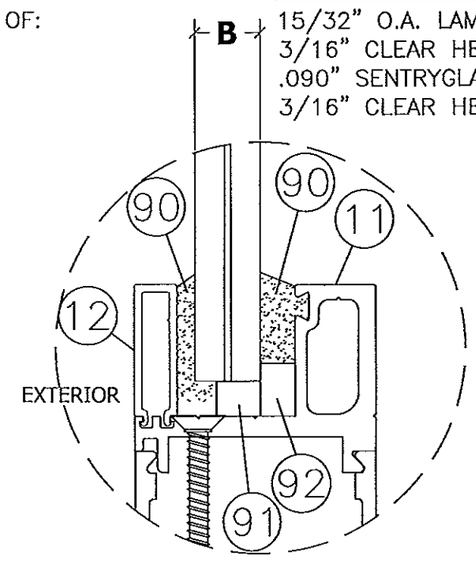

PROJECT #412-1016

REV	DESCRIPTION	DATE	BY
D	CORPORATE NAME CHANGE AND ADDTION OF NEW COSMETIC COMPONENT	12/14/12	RJA
C	UPDATED TO 2010 FBC	03/01/12	JBH
B	INCORPORATE MD-BCCO RFI COMMENTS	09/17/10	DAW

ASSA ABLOY ENTRANCE SYSTEMS US INC.
1900 AIRPORT ROAD
MONROE, NORTH CAROLINA 28110

TITLE: BESAM RESILIENCE FBO IMPACT DOOR SYSTEM
GLAZING DETAILS

DRAWN BY: SMC
DATE: 02/09/10
SCALE: N.T.S.
DRAWING NO: BES0006
REV: D
SHEET: 8 OF 26

PTC Product Design Group, LLC
PO Box 520775
Longwood, FL 32752-0775
FBPE C.A. NO. 25935
Phone: 321.690.1788
Fax: 321.690.1789
Email: info@ptc-corp.com

PRODUCT REVISED
as complying with the Florida
Building Code
Acceptance No 13-0924.07
Expiration Date 11/4/13
By [signature]
Building Code Product Control

Robert J. Amoruso, P.E.
Florida P.E. No. 49752

ROBERT JAMES AMORUSO
LICENSE
No 49752
9/19/13
STATE OF
FLORIDA
PROFESSIONAL ENGINEER

DOOR STILE OPTIONS

1/8" TYPICAL WALL THICKNESS

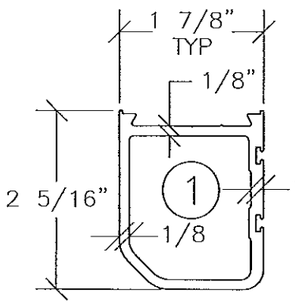

US01–0405
NARROW "B" STILE

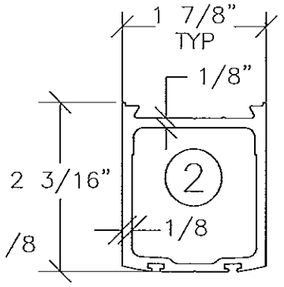

US01–0408
NARROW "A" STILE

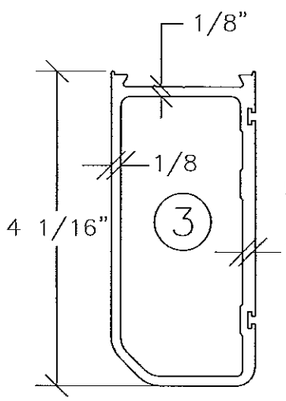

US01–0406
MEDIUM "B" STILE

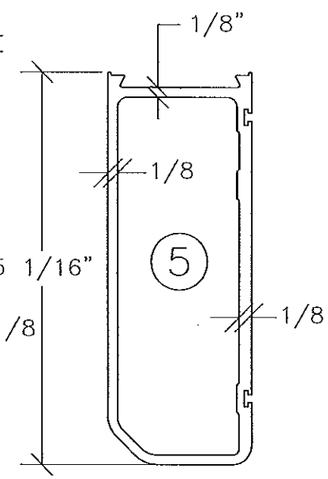

US01–0407
WIDE "B" STILE

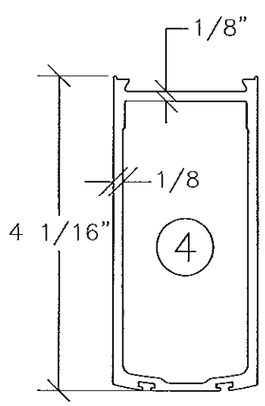

US01–0502
MEDIUM "A" STILE

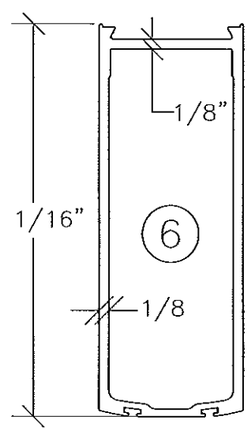

US01–0658
WIDE "A" STILE

DOOR RAIL OPTIONS

1/8" TYPICAL WALL THICKNESS

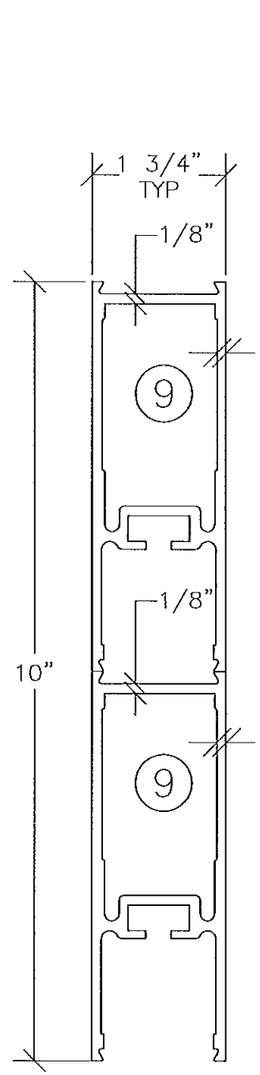

US01–0417 X 2
10" BOTTOM RAIL

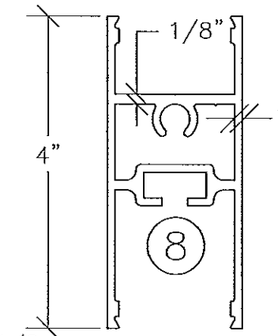

US01–0412
4" TOP/BTM RAIL

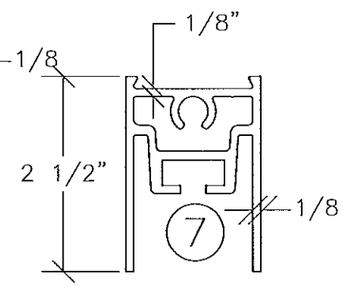

US01–0411
2 1/2" TOP RAIL

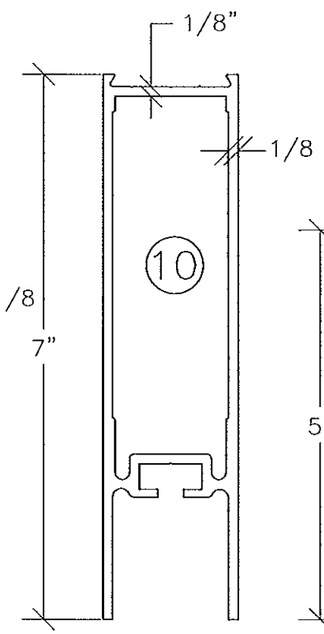

US01–0416
7" BOTTOM RAIL

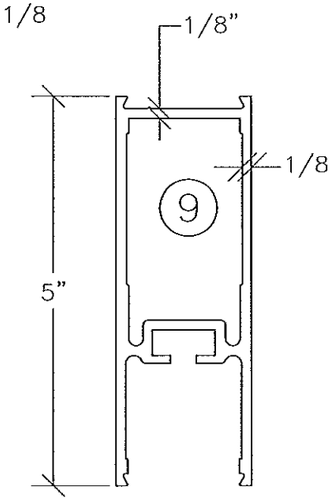

US01–0417
5" BOTTOM RAIL

DOOR COVER & SENSOR CAP OPTIONS

1/8" TYPICAL WALL THICKNESS – COVER
1/16" TYPICAL WALL THICKNESS – SENSOR COVER

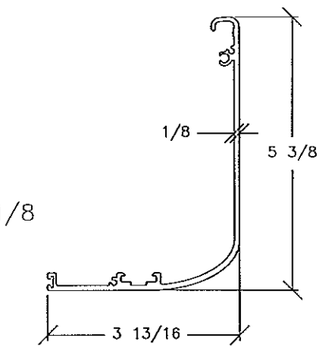

19A UNISLIDE COVER

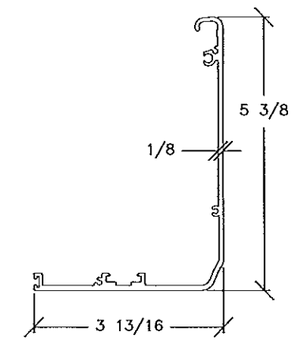

19B SL500 COVER

UNISLIDE COVER (19A – OPTION 1) SHOWN IN SECTION VIEWS. SL500 COVER (19B – OPTION 2) MAY BE SUBSTITUTED.

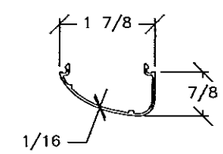

20A UNISLIDE SENSOR CAP

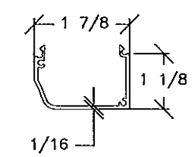

20B SL500 SENSOR CAP

UNISLIDE SENSOR CAP (20A – OPTION 1) SHOWN IN SECTION VIEWS. SL500 SENSOR CAP (20B – OPTION 2) MAY BE SUBSTITUTED.

REV	DESCRIPTION	DATE	BY
D	CORPORATE NAME CHANGE AND ADDITION OF NEW COSMETIC COMPONENT	12/14/12	RJA
C	UPDATED TO 2010 FBC	03/01/12	JBH
B	INCORPORATE MD-BCCO RFI COMMENTS	09/17/10	DAW

PROJECT #412-1016

ASSA ABLOY ENTRANCE SYSTEMS US INC.
1900 AIRPORT ROAD
MONROE, NORTH CAROLINA 28110

TITLE: BESAM RESILIENCE FBO IMPACT DOOR SYSTEM EXTRUSION PROFILES: DOOR STILES & RAILS

DRAWN BY: SMC | DATE: 02/09/10
SCALE: N.T.S. | DRAWING NO: BES0006
REV: D | SHEET: 9 OF 26

PTC Product Design Group, LLC
P.O. Box 2775
Longwood, FL 32752-2775
FBPE C.A. NO. 29835
Phone: 321.690.1788
Fax: 321.690.1789
Email: info@ptc-corp.com

PRODUCT REVISED
to complying with the Florida Building Code
Acceptance No. 13-0924-07
Expiration Date 11/15/13
By [signature]
Effective Date/Product Control

Robert J. Amoruso, P.E.
Florida P.E. No. 49752

ROBERT JAMES AMORUSO
LICENSE
No 49752
STATE OF FLORIDA
PROFESSIONAL ENGINEER
9/19/13

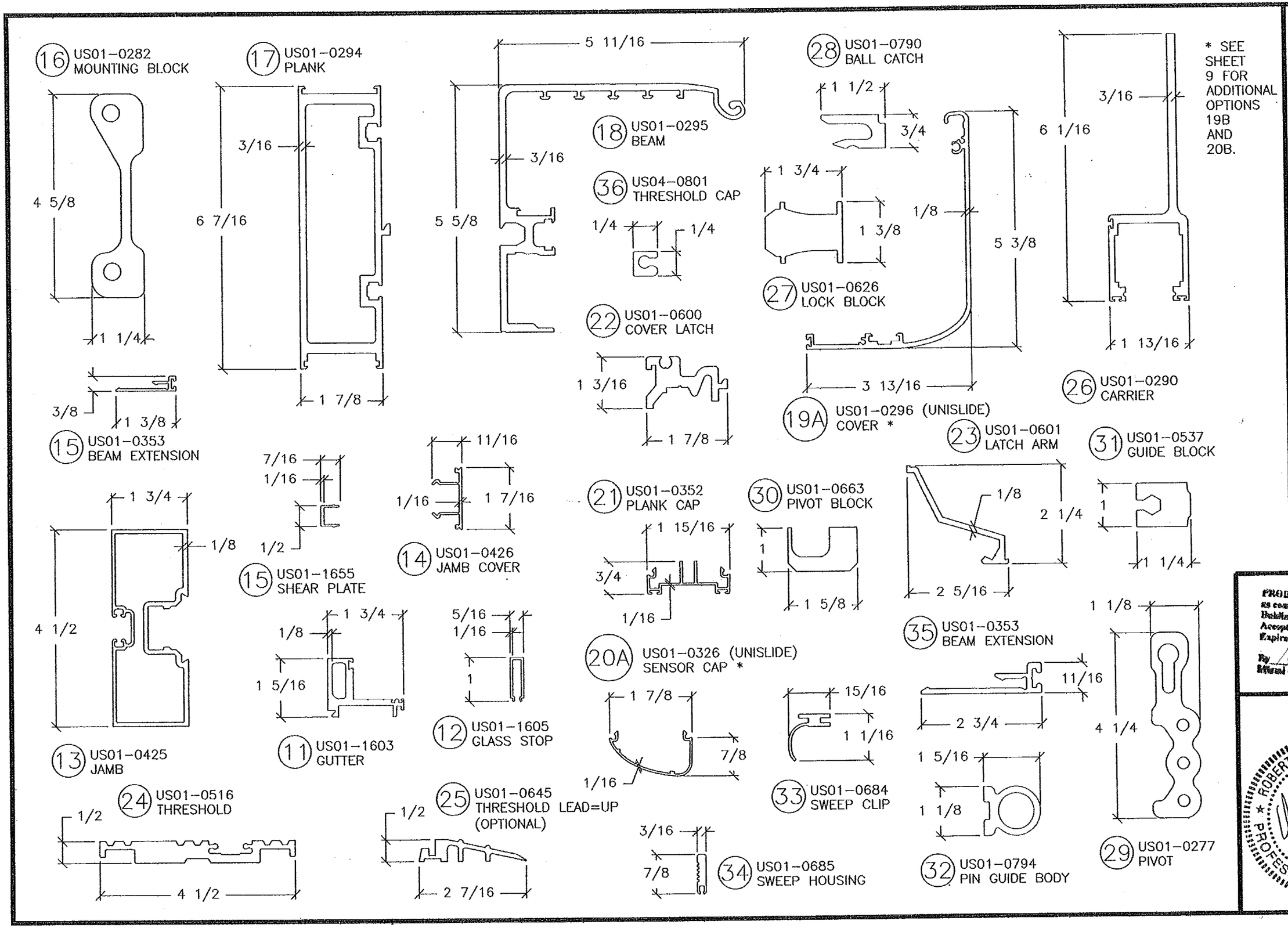

REV	DESCRIPTION	DATE	BY
D	CORPORATE NAME CHANGE AND ADDITION OF NEW COSMETIC COMPONENT	12/14/12	RJA
C	UPDATED TO 2010 FBC	03/01/12	JBH
B	INCORPORATE MD-BCCO RFI COMMENTS	08/17/10	DAW

PROJECT #412-1016

ASSA ABLOY ENTRANCE SYSTEMS US INC.
1900 AIRPORT ROAD
MONROE, NORTH CAROLINA 28110

TITLE: BESAM RESILIENCE FBO IMPACT DOOR SYSTEM
EXTRUSION PROFILES

DRAWN BY: SMC
DATE: 02/09/10
SCALE: N.T.S.
DRAWING NO: BES0006
REV: D
SHEET: 10 OF 26

PTC Product Design Group, LLC
PO Box 520775
Longwood, FL 32752-0775
FBPE C.A. NO. 25025
Phone: 321.800.1788
Fax: 407.830.7709
Email: info@ptcpdg.com

PRODUCT REVISED
as complying with the Florida Building Code
Acceptance No 12-0924.07
Expiration Date 11/14/15
By
Miami Dade Product Control

Robert J. Amoruso, P.E.
Florida P.E. No. 49752

ROBERT JAMES AMORUSO
LICENSE
No 49752
STATE OF FLORIDA
PROFESSIONAL ENGINEER
9/19/13

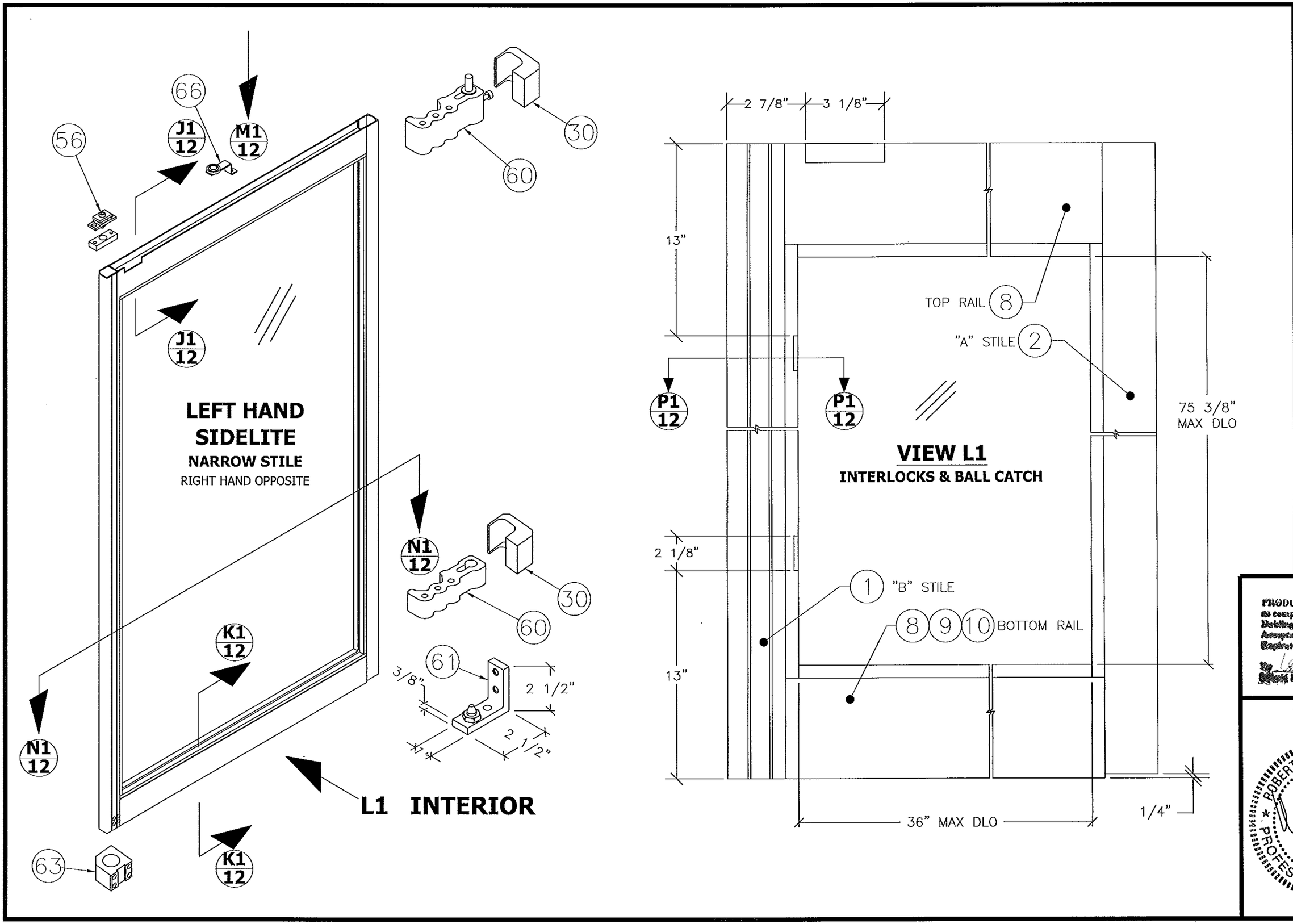

PROJECT #412-1016

REV	DESCRIPTION	DATE	BY
D	CORPORATE NAME CHANGE AND ADDTION OF NEW COSMETIC COMPONENT	12/14/12	RJA
C	UPDATED TO 2010 FBC	03/01/12	JBH
B	INCORPORATE MD-BCCO RFI COMMENTS	09/17/10	DAW

ASSA ABLOY ENTRANCE SYSTEMS US INC.
1900 AIRPORT ROAD
MONROE, NORTH CAROLINA 28110

TITLE: BESAM RESILIENCE FBO IMPACT DOOR SYSTEM
NARROW STILE SIDE-LITE DETAIL

DRAWN BY: SMC
DATE: 02/09/10
SCALE: N.T.S.
DRAWING NO: BES0006
REV: D
SHEET: 11 OF 26

PTC Product Design Group, LLC
PO Box 520775
Longwood, FL 32752-0775
FBPE C.A. NO. 25935
Phone: 321.690.1788
Fax: 321.690.1789
Email: info@ptc-corp.com

PRODUCT REVISED
as complying with the Florida
Building Code
Acceptance No 13-0924.07
Expiration Date 11/4/15
By [signature]
Signed Date Product Control

Robert J. Amoruso, P.E.
Florida P.E. No. 49752

ROBERT JAMES AMORUSO
LICENSE
No 49752
9/19/13
STATE OF FLORIDA
PROFESSIONAL ENGINEER

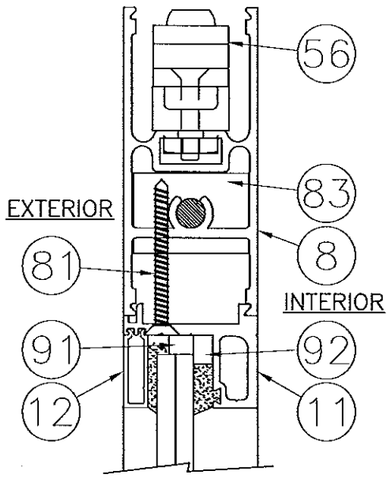

SECTION J1-J1
STANDARD 4"
TOP RAIL

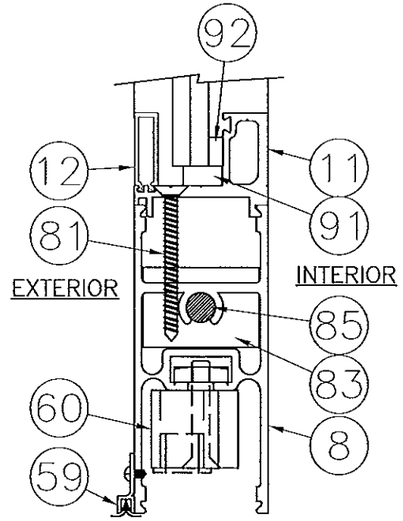

SECTION K1-K1
STANDARD 4"
BOTTOM RAIL

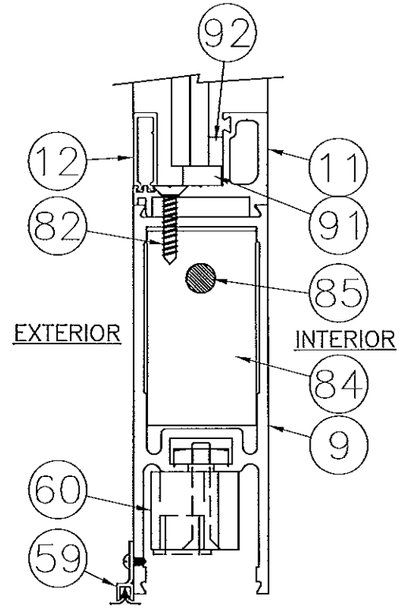

SECTION K1-K1
OPTIONAL 5"
BOTTOM RAIL

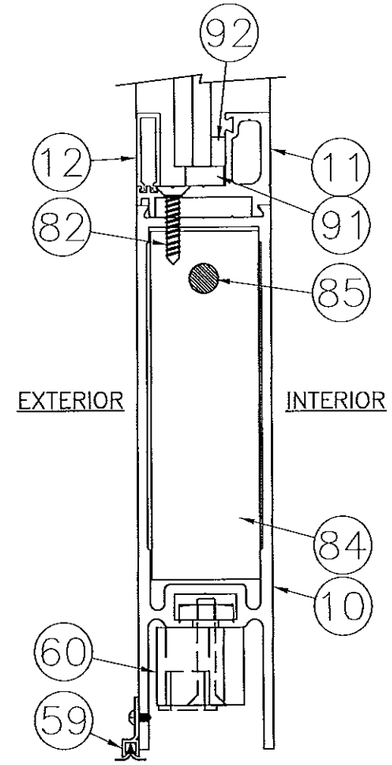

SECTION K1-K1
OPTIONAL 7"
BOTTOM RAIL

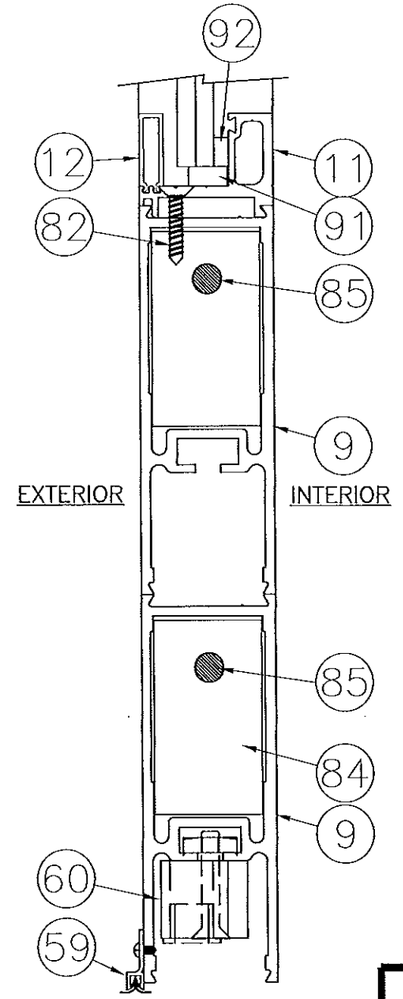

SECTION K1-K1
OPTIONAL 10"
BOTTOM RAIL

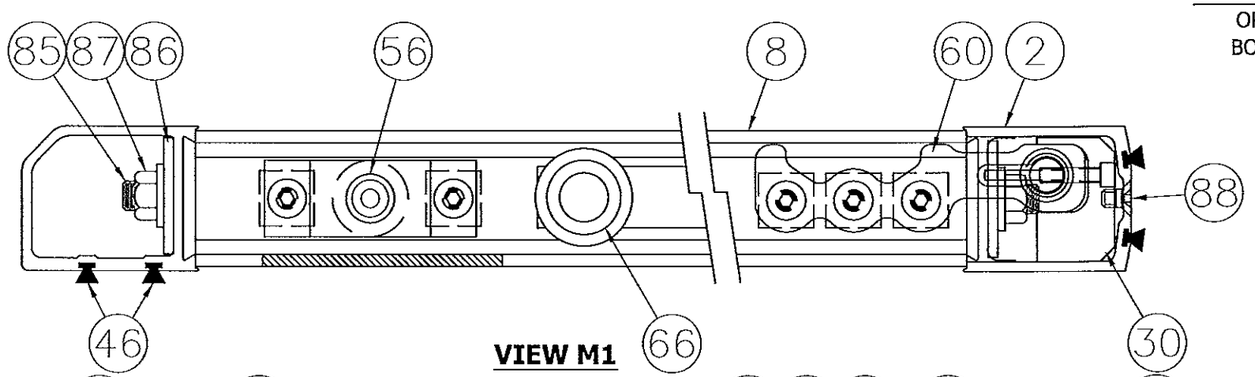

VIEW M1

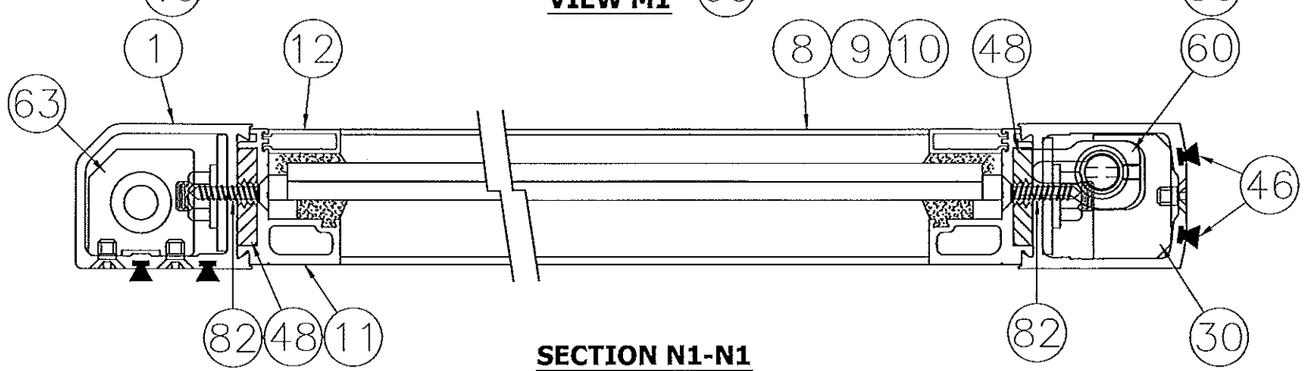

SECTION N1-N1

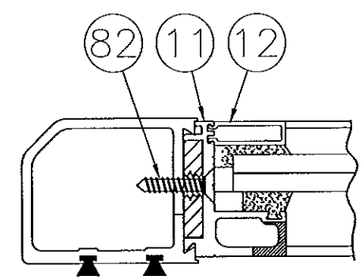

SECTION P1-P1

PROJECT #412-1016

REV	DESCRIPTION	DATE	BY
D	CORPORATE NAME CHANGE AND ADDTION OF NEW COSMETIC COMPONENT	12/14/12	RJA
C	UPDATED TO 2010 FBC	03/01/12	JBH
B	INCORPORATE MD-BCCO RFI COMMENTS	09/17/10	DAW

ASSA ABLOY ENTRANCE SYSTEMS US INC.
1900 AIRPORT ROAD
MONROE, NORTH CAROLINA 28110

TITLE: BESAM RESILIENCE FBO IMPACT DOOR SYSTEM
NARROW STILE SIDE-LITE SECTIONS

DRAWN BY: SMC
DATE: 02/09/10
SCALE: N.T.S.
DRAWING NO: BES0006
REV: D
SHEET: 12 OF 26

PTC Product Design Group, LLC
PO Box 520775
Longwood, FL 32752-0775
FBPE C.A. NO. 25935
Phone: 321.690.1788
Fax: 321.690.1789
Email: info@ptc-corp.com

PRODUCT REVISED
as complying with the Florida
Building Code
Acceptance No 12-0924.07
Expiration Date 11/4/15
By [signature]
Miami Dade Product Control

Robert J. Amoruso, P.E.
Florida P.E. No. 49752

ROBERT JAMES AMORUSO
LICENSE
No 49752
9/19/13
STATE OF
FLORIDA
PROFESSIONAL ENGINEER

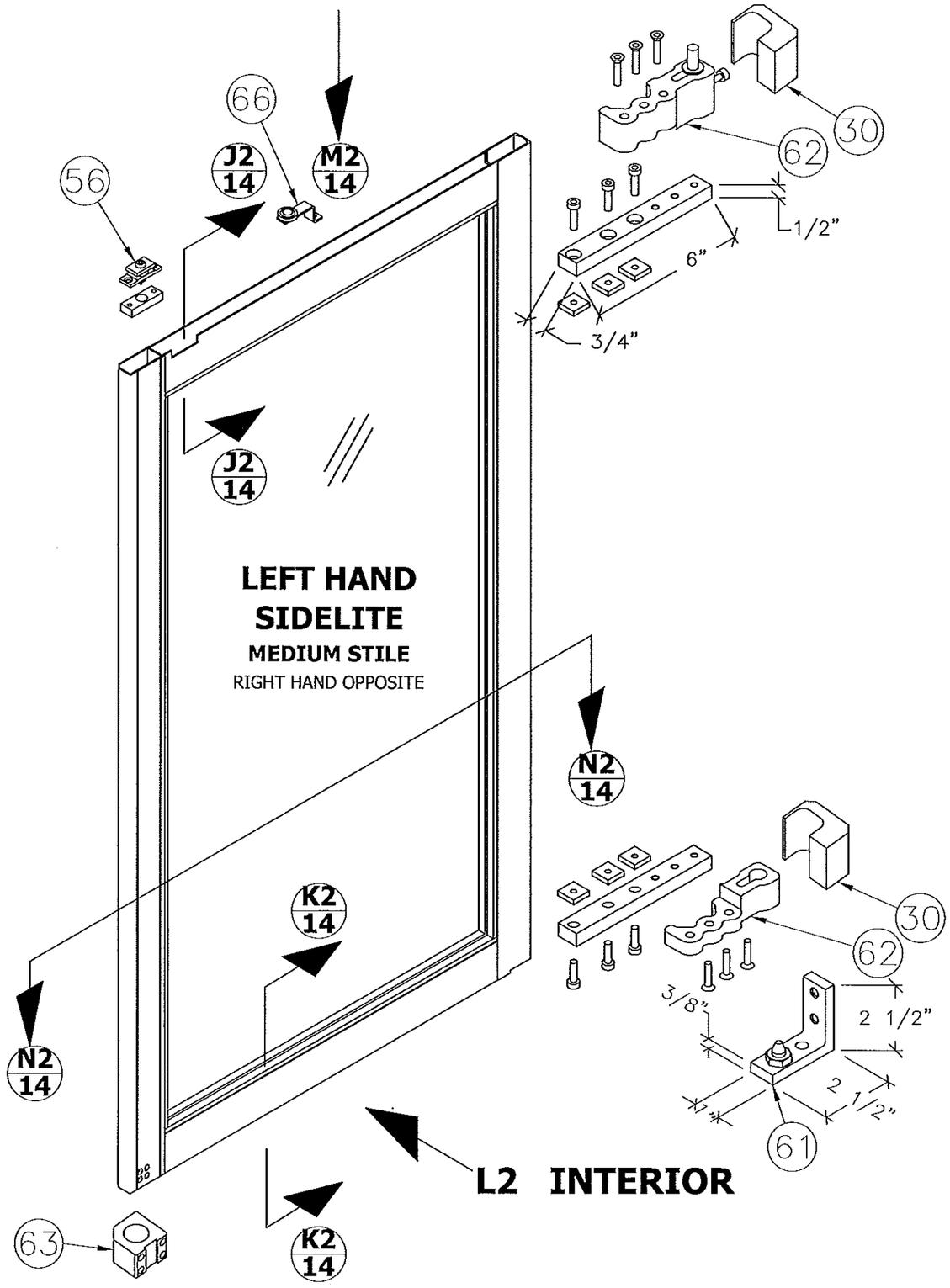

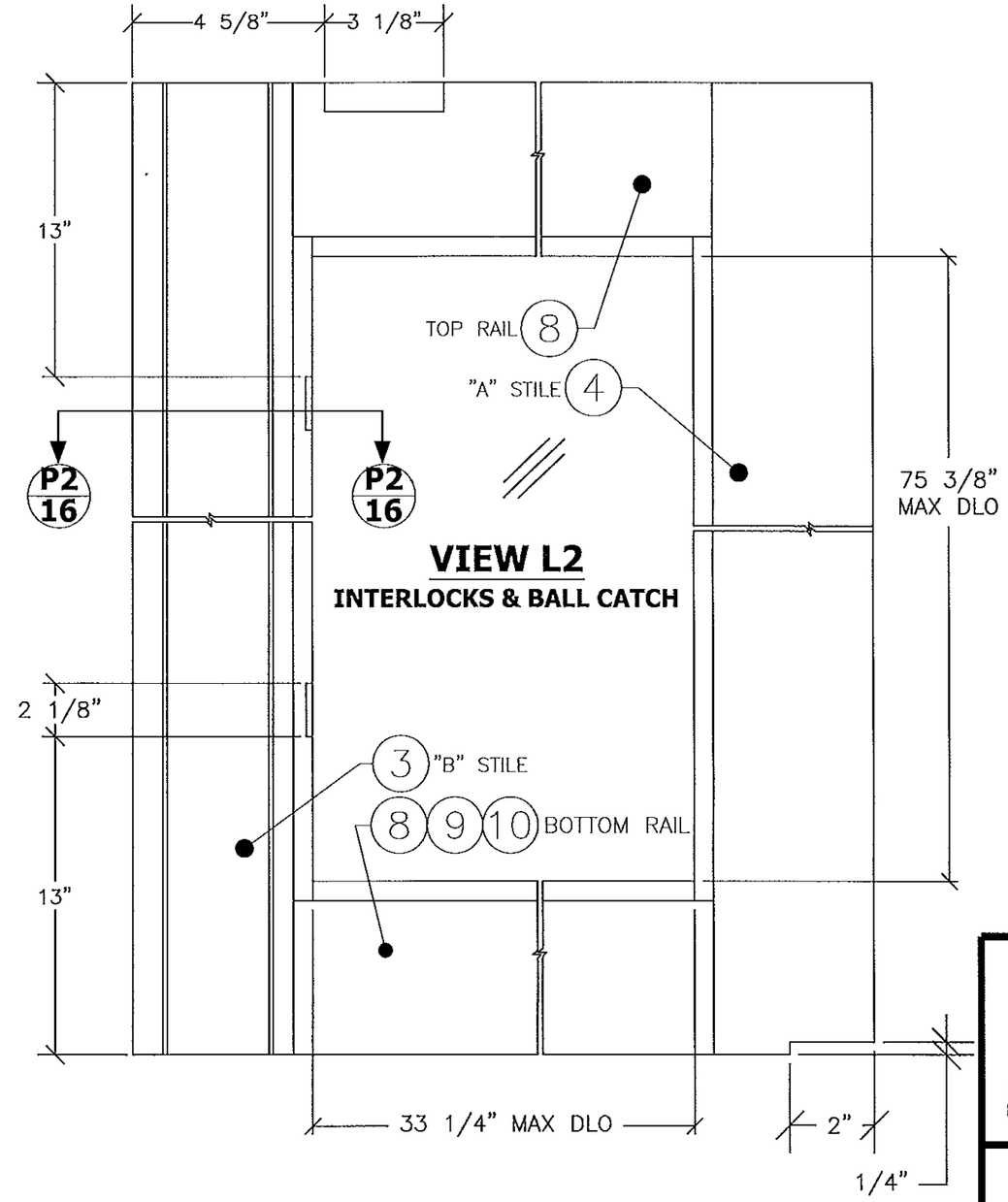

REV	DESCRIPTION	DATE	BY
D	CORPORATE NAME CHANGE AND ADDITION OF NEW COSMETIC COMPONENT	12/14/12	RJA
C	UPDATED TO 2010 FBC	03/01/12	JBH
B	INCORPORATE MD-BCCO RFI COMMENTS	09/17/10	DAW

PROJECT #412-1016

ASSA ABLOY ENTRANCE SYSTEMS US INC.
1900 AIRPORT ROAD
MONROE, NORTH CAROLINA 28110

BESAM RESILIENCE FBO IMPACT DOOR SYSTEM
MEDIUM STILE SIDE-LITE DETAIL

TITLE:

DRAWN BY: SMC
DATE: 02/09/10
SCALE: N.T.S.
DRAWING NO: BES0006
REV: D
SHEET: 13 OF 26

PTC Product Design Group, LLC
PO Box 630775
Longwood, FL 32752-0775
FBPE C.A. NO. 25935
Phone: 321.690.1798
Fax: 321.690.1789
Email: info@ptc-corp.com

PRODUCT REVISED
as complying with the Florida
Building Code
Acceptance No 13-0924.07
Expiration Date 11/14/15
By
Refer to the Product Control

Robert J. Amoruso, P.E.
Florida P.E. No. 49752

ROBERT JAMES AMORUSO
LICENSE
No 49752
9/9/13
STATE OF
FLORIDA
PROFESSIONAL ENGINEER

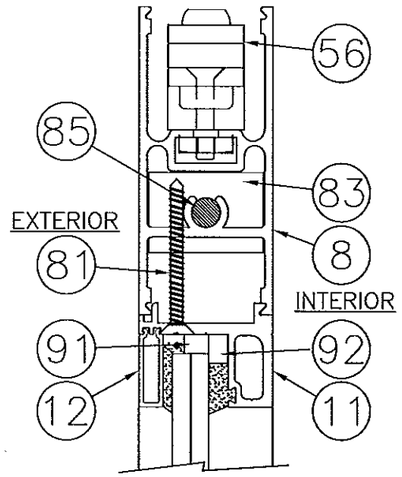

SECTION J2-J2
STANDARD 4"
TOP RAIL

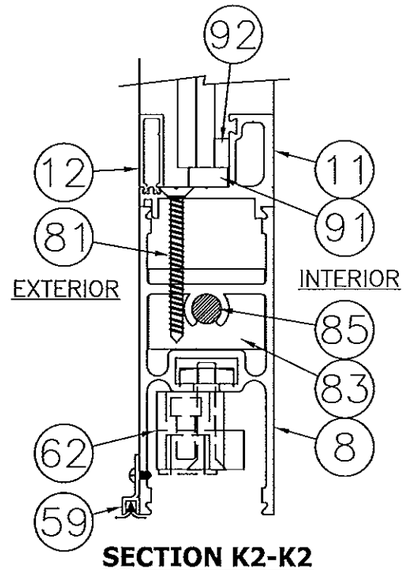

SECTION K2-K2
STANDARD 4"
BOTTOM RAIL

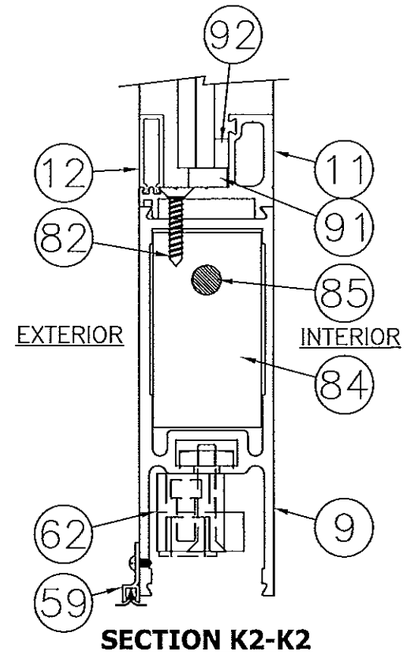

SECTION K2-K2
OPTIONAL 5" BOTTOM
RAIL

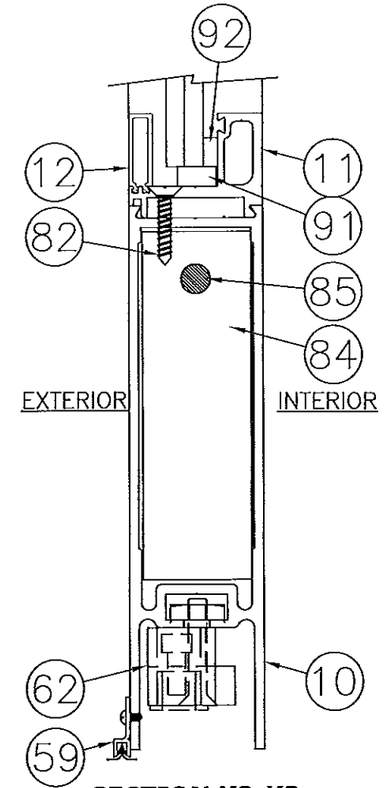

SECTION K2-K2
OPTIONAL 7" BOTTOM
RAIL

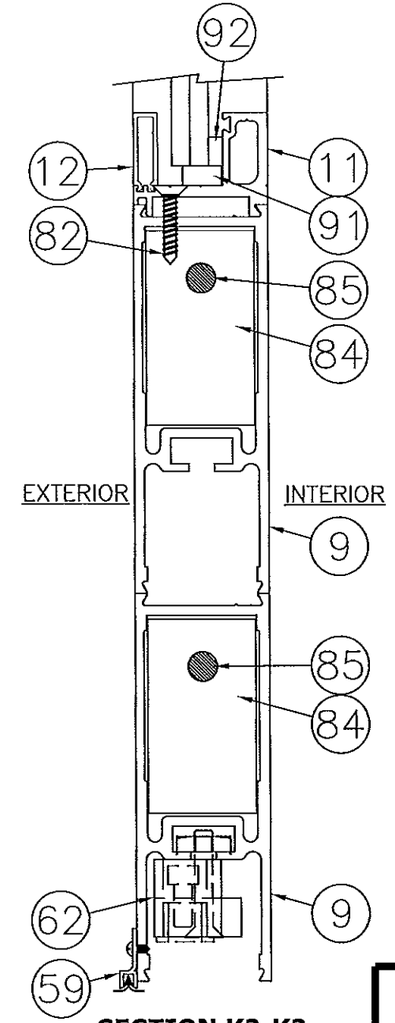

SECTION K2-K2
OPTIONAL 10" BOTTOM
RAIL

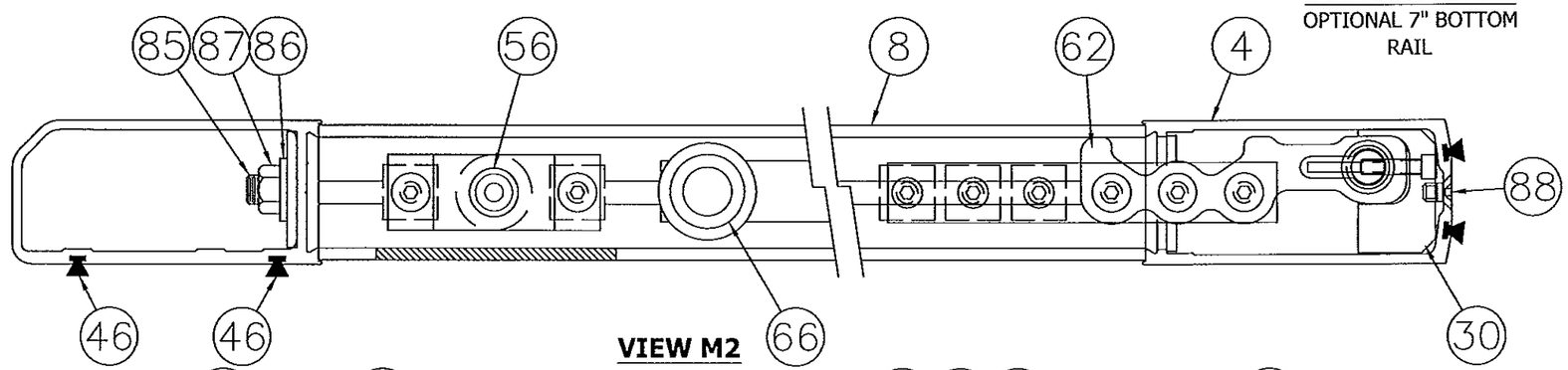

VIEW M2

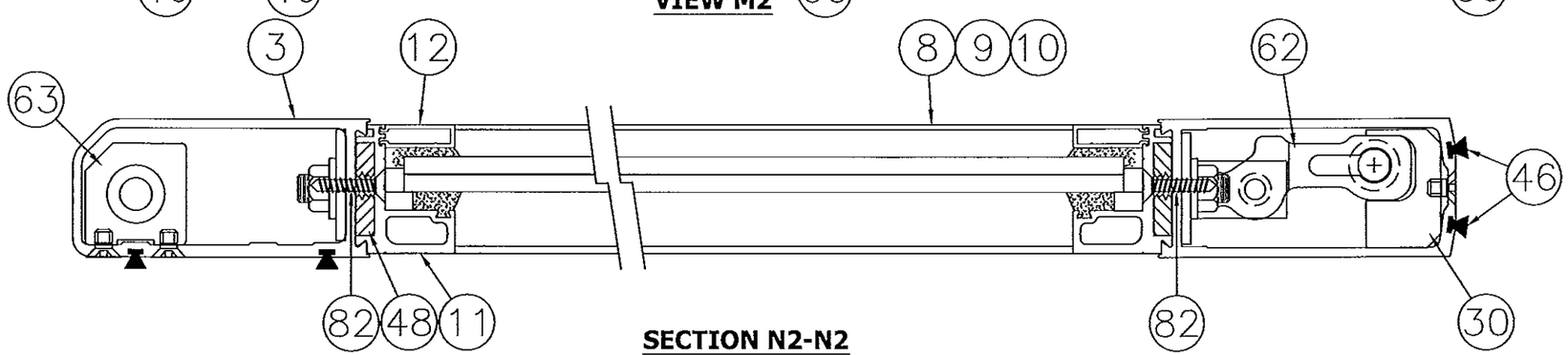

SECTION N2-N2

PROJECT #412-1016

REV	DESCRIPTION	DATE	BY
D	CORPORATE NAME CHANGE AND ADDTION OF NEW COSMETIC COMPONENT	12/14/12	RJA
C	UPDATED TO 2010 FBC	03/01/12	JBH
B	INCORPORATE MD-BCCO RFI COMMENTS	09/17/10	DAW

ASSA ABLOY ENTRANCE SYSTEMS US INC.
1900 AIRPORT ROAD
MONROE, NORTH CAROLINA 28110

TITLE: BESAM RESILIENCE FBO IMPACT DOOR SYSTEM
MED & WIDE STILE SIDE-LITE SECTIONS

DRAWN BY: SMC
DATE: 02/09/10
SCALE: N.T.S.
DRAWING NO: BES0006
REV: D
SHEET: 14 OF 26

PTC Product Design Group, LLC
PO Box 520775
Longwood, FL 32752-0775
FBPE C.A. NO. 25935
Phone: 321.690.1788
Fax: 321.690.1789
Email: info@ptc-corp.com

PRODUCT REVISED
as complying with the Florida
Building Code
Acceptance No 13-0924.07
Expiration Date 11/4/15
By Ishaq I. Khan
Miami Dade Product Control

Robert J. Amoruso, P.E.
Florida P.E. No. 49752

ROBERT JAMES AMORUSO
LICENSE
No 49752
9/19/13
STATE OF
FLORIDA
PROFESSIONAL ENGINEER

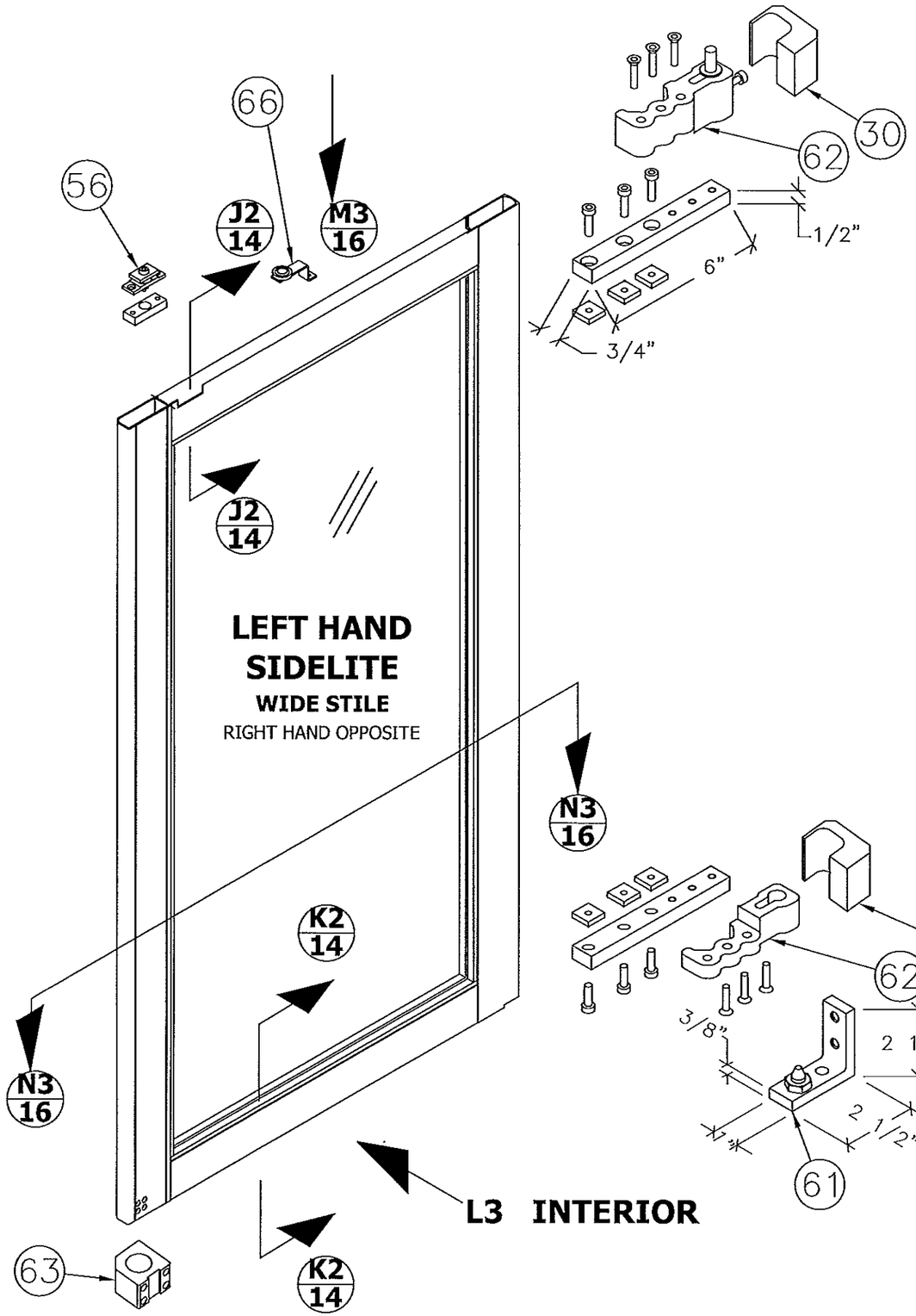

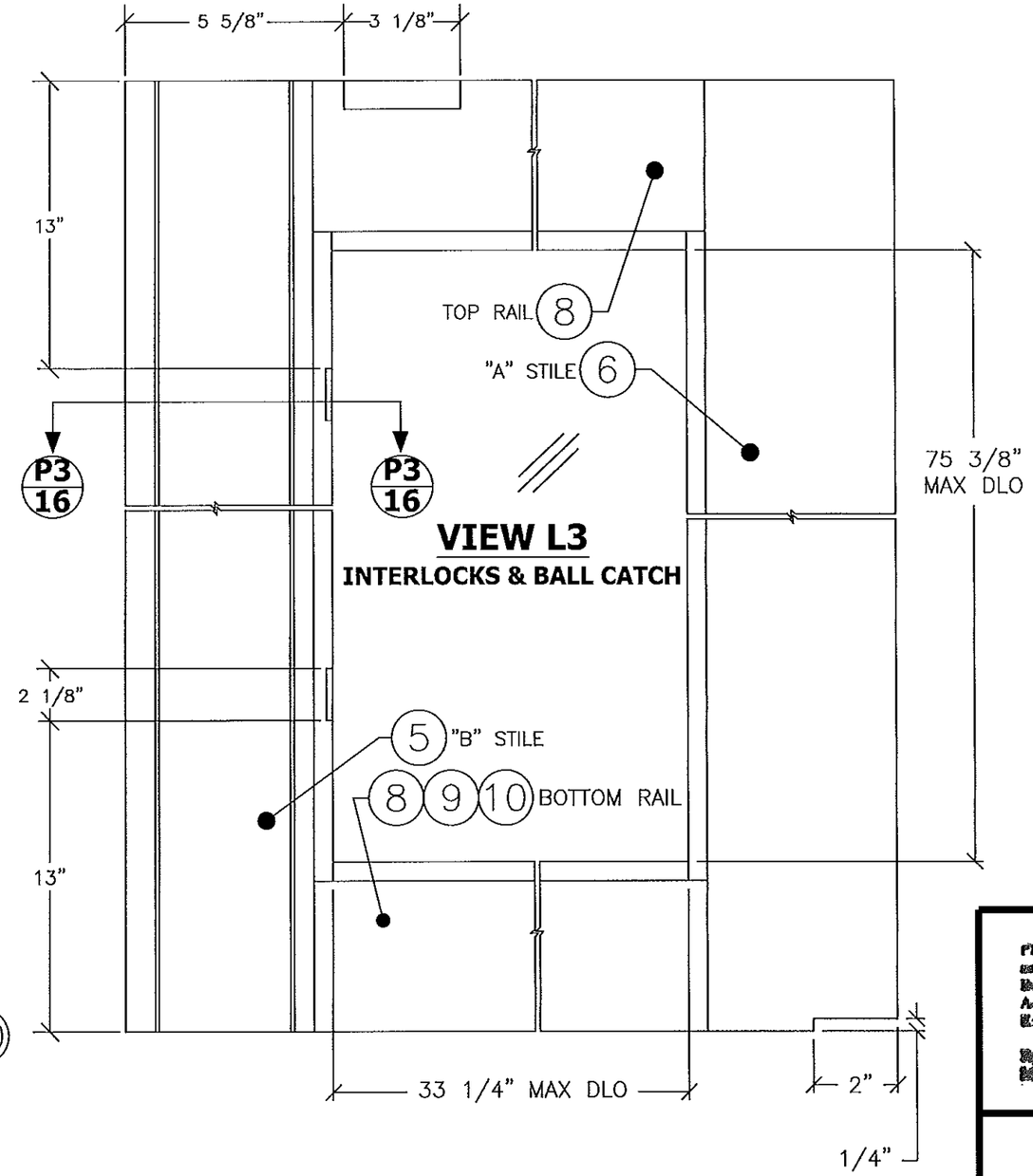

PROJECT #412-1016

REV	DESCRIPTION	DATE	BY
D	CORPORATE NAME CHANGE AND ADDTION OF NEW COSMETIC COMPONENT	12/14/12	RJA
C	UPDATED TO 2010 FBC	03/01/12	JBH
B	INCORPORATE MD-BCCO RFI COMMENTS	09/17/10	DAW

ASSA ABLOY ENTRANCE SYSTEMS US INC.
1900 AIRPORT ROAD
MONROE, NORTH CAROLINA 28110

TITLE: BESAM RESILIENCE FBO IMPACT DOOR SYSTEM
WIDE STILE SIDE-LITE DETAIL

DRAWN BY: SMC
DATE: 02/09/10
SCALE: N.T.S.
DRAWING NO: BES0006
REV: D
SHEET: 15 OF 26

PTC Product Design Group, LLC
PO Box 520775
Longwood, FL 32752-0775
FBPE C.A. NO. 25935
Phone: 321.690.1788
Fax: 321.690.1789
Email: info@ptc-corp.com

PRODUCT REVISED
as complying with the Florida
Building Code
Acceptance No 13-0924-07
Expiration Date 11/4/15
By [signature]
Official Dade Product Control

Robert J. Amoruso, P.E.
Florida P.E. No. 49752

ROBERT JAMES AMORUSO
LICENSE
No 49752
STATE OF FLORIDA
PROFESSIONAL ENGINEER
9/19/13

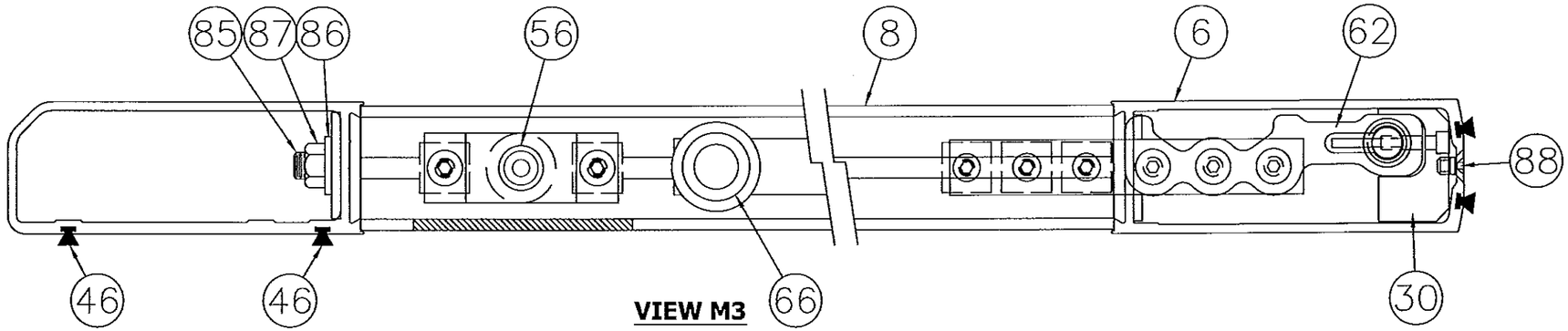

VIEW M3

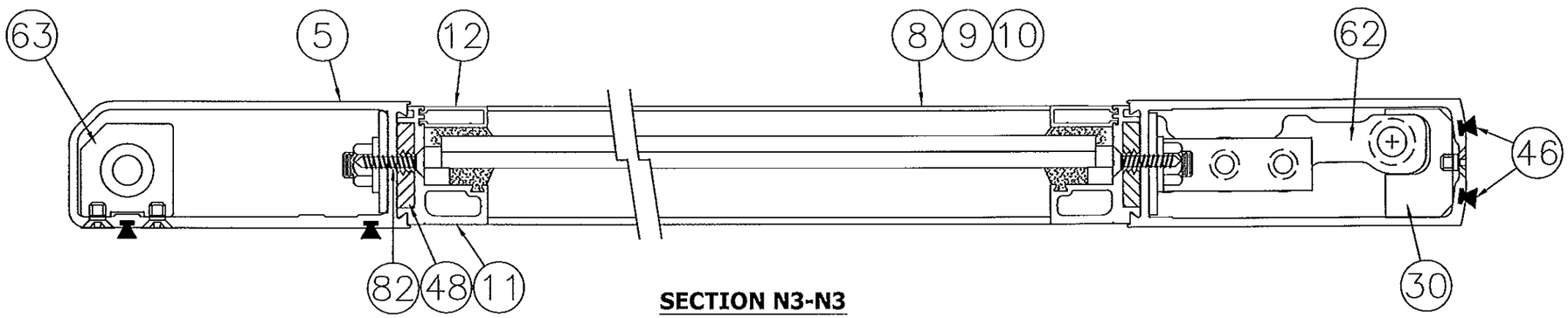

SECTION N3-N3

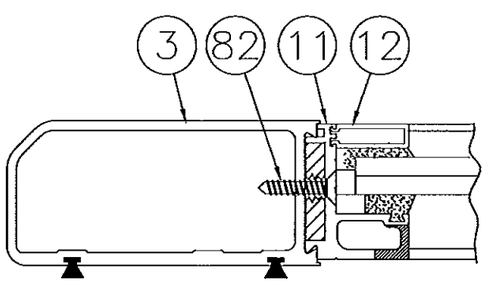

SECTION P2-P2

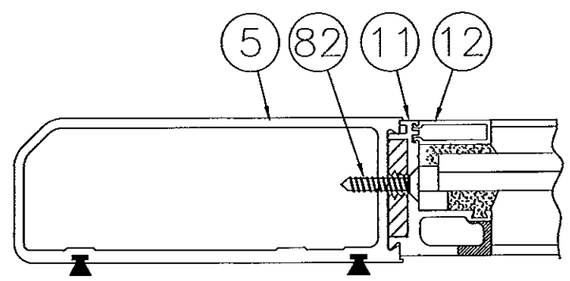

SECTION P3-P3

PROJECT #412-1016

REV	DESCRIPTION	DATE	BY
D	CORPORATE NAME CHANGE AND ADDTION OF NEW COSMETIC COMPONENT	12/14/12	RJA
C	UPDATED TO 2010 FBC	03/01/12	JBH
B	INCORPORATE MD-BCCO RFI COMMENTS	09/17/10	DAW

ASSA ABLOY ENTRANCE SYSTEMS US INC.
1900 AIRPORT ROAD
MONROE, NORTH CAROLINA 28110

TITLE: BESAM RESILIENCE FBO IMPACT DOOR SYSTEM
MED & WIDE STILE SIDE-LITE SECTIONS

DRAWN BY: SMC
DATE: 02/09/10
SCALE: N.T.S.
DRAWING NO: BES0006
REV: D
SHEET: 16 OF 26

PTC Product Design Group, LLC
PO Box 520775
Longwood, FL 32752-0775
FBPE C.A. NO. 25935
Phone: 321.690.1788
Fax: 321.690.1789
Email: info@ptc-corp.com

PRODUCT REVISED
as complying with the Florida
Building Code
Acceptance No. 13-0924.07
Expiration Date 11/14/15
By [signature]
Miami Dade Product Control

Robert J. Amoruso, P.E.
Florida P.E. No. 49752

ROBERT JAMES AMORUSO
LICENSE
No 49752
9/19/13
STATE OF
FLORIDA
PROFESSIONAL ENGINEER

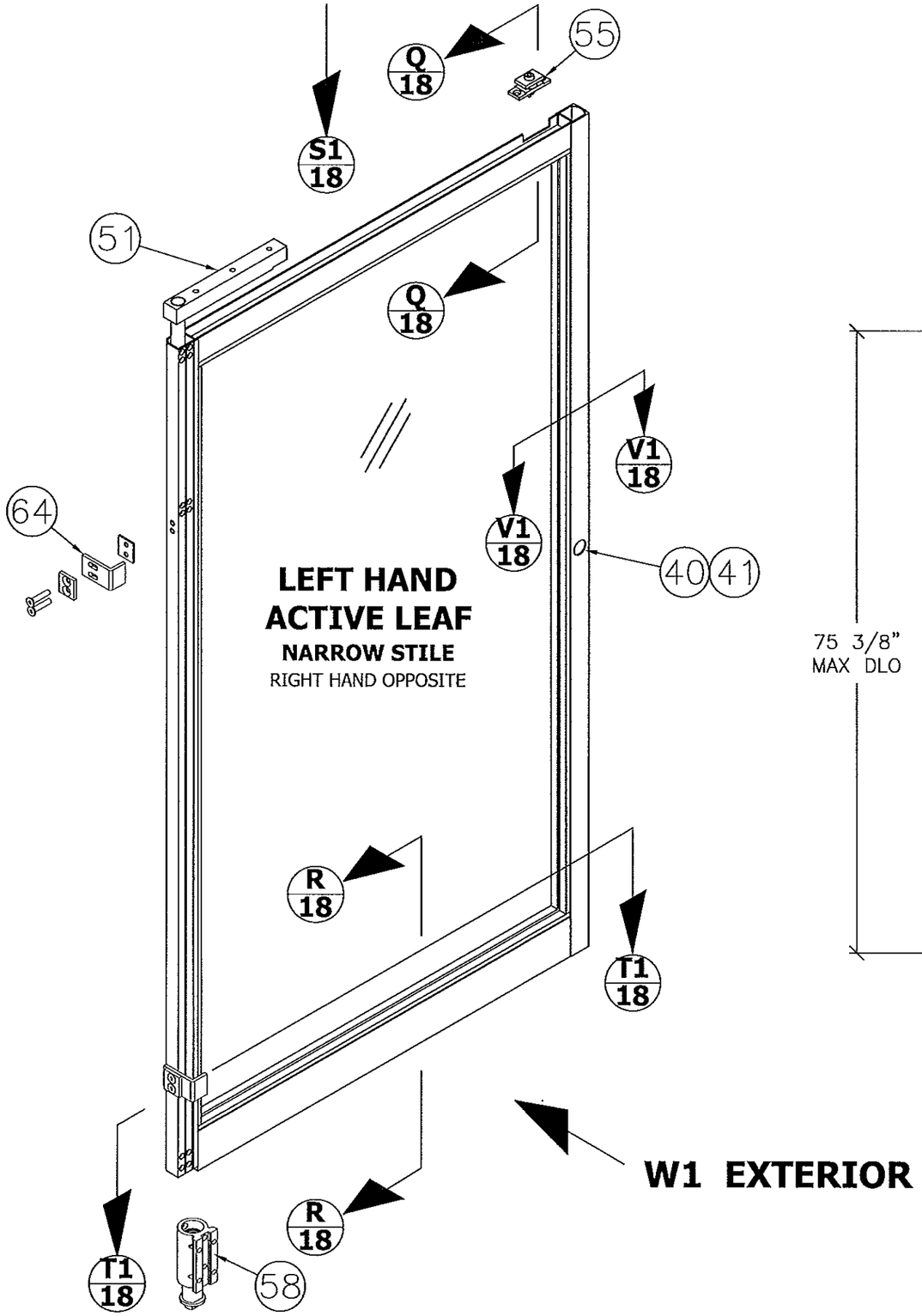

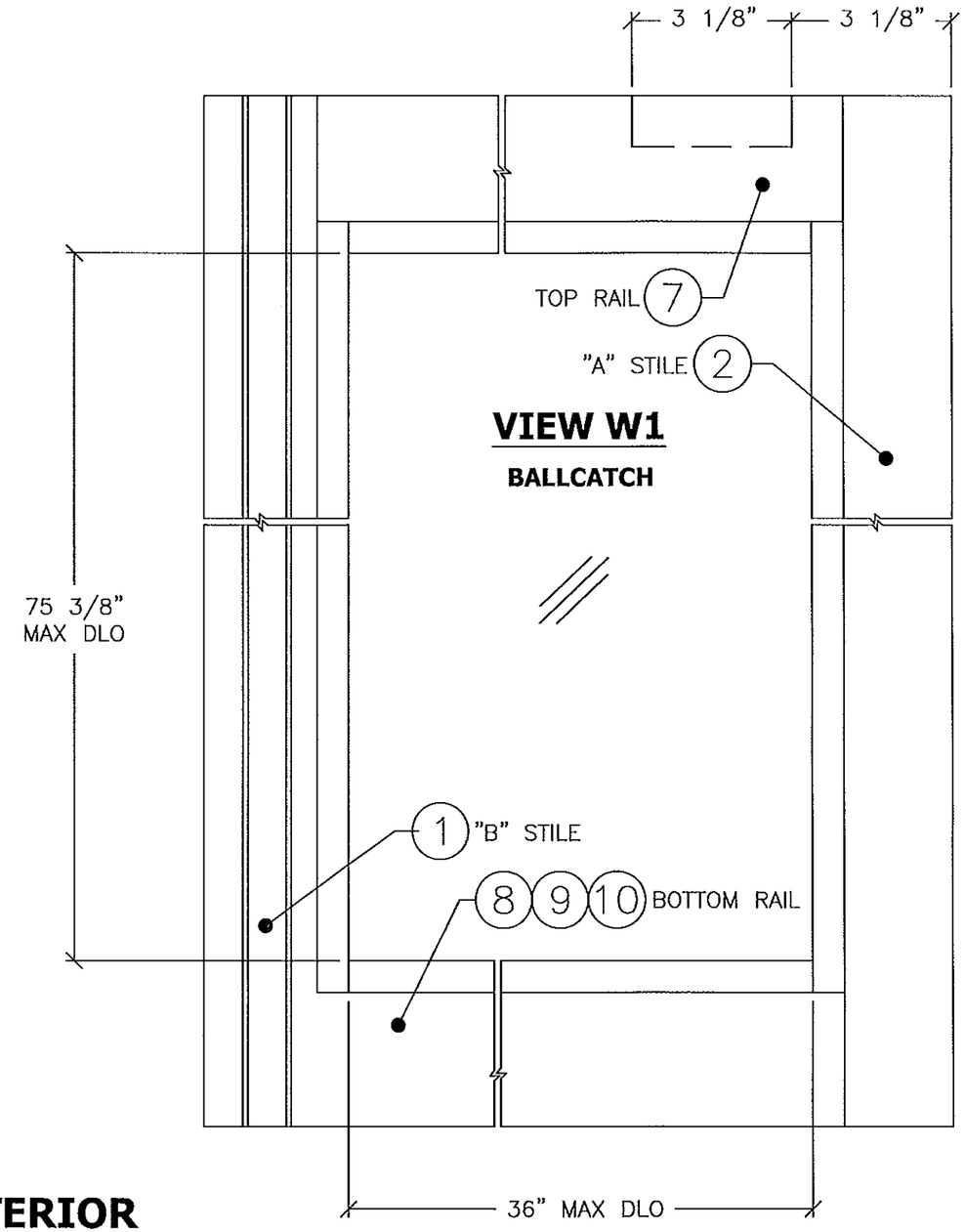

PROJECT #412-1016

REV	DESCRIPTION	DATE	BY
D	CORPORATE NAME CHANGE AND ADDITION OF NEW COSMETIC COMPONENT	12/14/12	RJA
C	UPDATED TO 2010 FBC	03/01/12	JBH
B	INCORPORATE MD-BCCO RFI COMMENTS	09/17/10	DAW

ASSA ABLOY ENTRANCE SYSTEMS US INC.
1900 AIRPORT ROAD
MONROE, NORTH CAROLINA 28110

TITLE: BESAM RESILIENCE FBO IMPACT DOOR SYSTEM
NARROW STILE ACTIVE-LITE DETAIL

DRAWN BY: SMC
DATE: 02/09/10
SCALE: N.T.S.
DRAWING NO: BES0006
REV: D
SHEET: 17 OF 26

PTC Product Design Group, LLC
P.O. Box 3275
Longwood, FL 32752-0775
FBPE C.A. NO. 25935
Phone: 321.890.1788
Fax: 321.890.1789
Email: info@ptc-corp.com

PRODUCT REVISED
as complying with the Florida Building Code
Acceptance No 13-0924.07
Expiration Date 11/14/15
By [illegible]
Effective Date Product Control

Robert J. Amoruso, P.E.
Florida P.E. No. 49752

ROBERT JAMES AMORUSO
LICENSE
No 49752
STATE OF FLORIDA
PROFESSIONAL ENGINEER
9/19/13

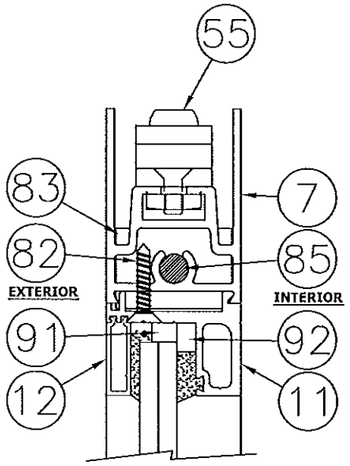

SECTION Q-Q
STANDARD 2-1/2"
TOP RAIL

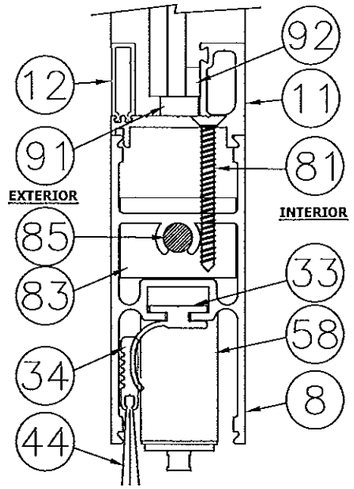

SECTION R-R
STANDARD 4"
BOTTOM RAIL

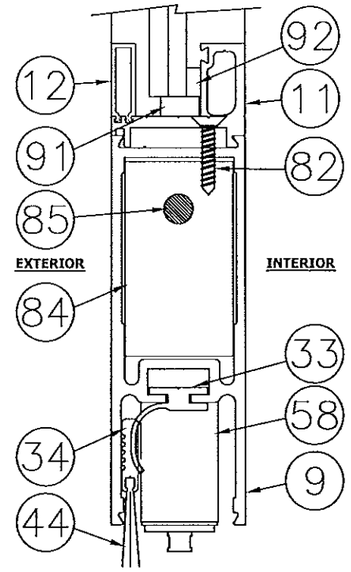

SECTION R-R
OPTIONAL 5"
BOTTOM RAIL

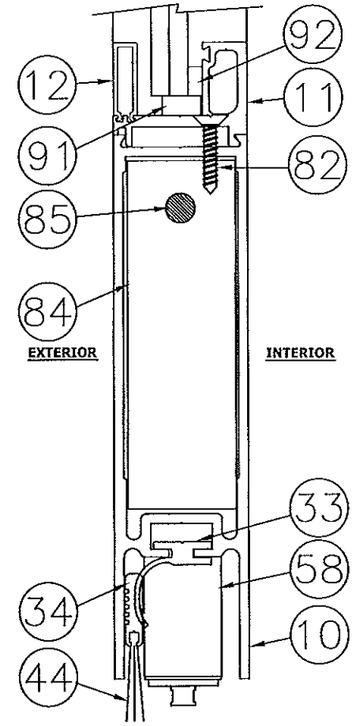

SECTION R-R
OPTIONAL 7"
BOTTOM RAIL

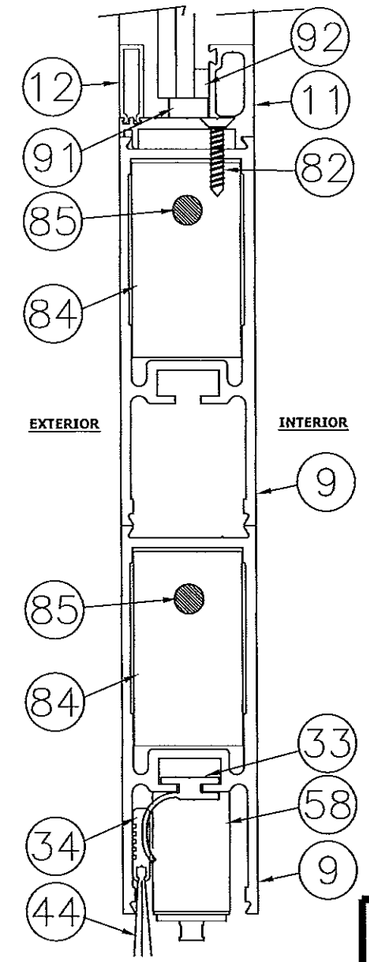

SECTION R-R
OPTIONAL 10"
BOTTOM RAIL

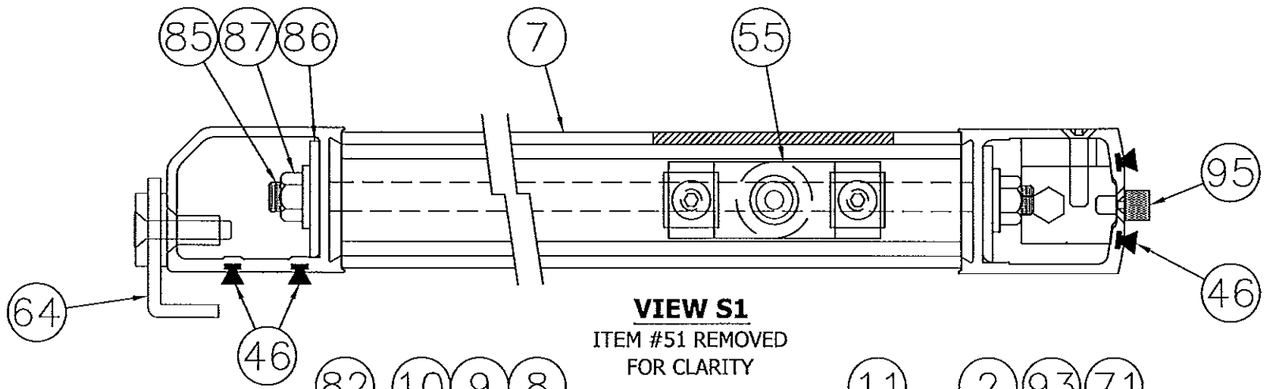

VIEW S1
ITEM #51 REMOVED
FOR CLARITY

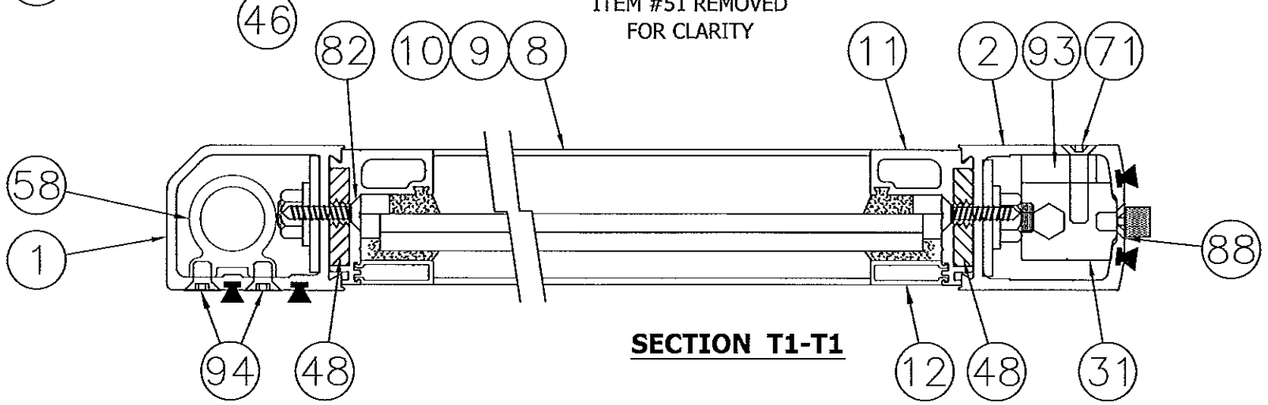

SECTION T1-T1

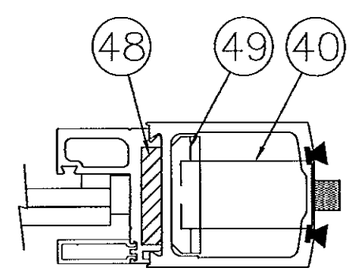

SECTION V1-V1

REV	DESCRIPTION	DATE	BY
D	CORPORATE NAME CHANGE AND ADDITION OF NEW COSMETIC COMPONENT	12/14/12	RJA
C	UPDATED TO 2010 FBC	03/01/12	JBH
B	INCORPORATE MD-BCCO RFI COMMENTS	09/17/10	DAW

PROJECT #412-1016

ASSA ABLOY ENTRANCE SYSTEMS US INC.
1900 AIRPORT ROAD
MONROE, NORTH CAROLINA 28110

TITLE: BESAM RESILIENCE FBO IMPACT DOOR SYSTEM
NARROW STILE A-L & HORIZONTAL SECTIONS

DRAWN BY: SMC
DATE: 02/09/10
SCALE: N.T.S.
DRAWING NO: BES0006
REV: D
SHEET: 18 OF 26

PTC Product Design Group, LLC
P.O. Box 520775
Longwood, FL 32752-0776
FBPE C.A. NO. 29935
Phone: 321.690.1788
Fax: 321.690.1789
Email: info@ptc-corp.com

PRODUCT REVISED
to complying with the Florida
Building Code
Acceptance No. 13-0924.07
Expiration Date 11/14/15
By [illegible]
Effective Date Product Control

Robert J. Amoruso, P.E.
Florida P.E. No. 49752

ROBERT JAMES AMORUSO
LICENSE
No 49752
9/19/13
STATE OF FLORIDA
PROFESSIONAL ENGINEER

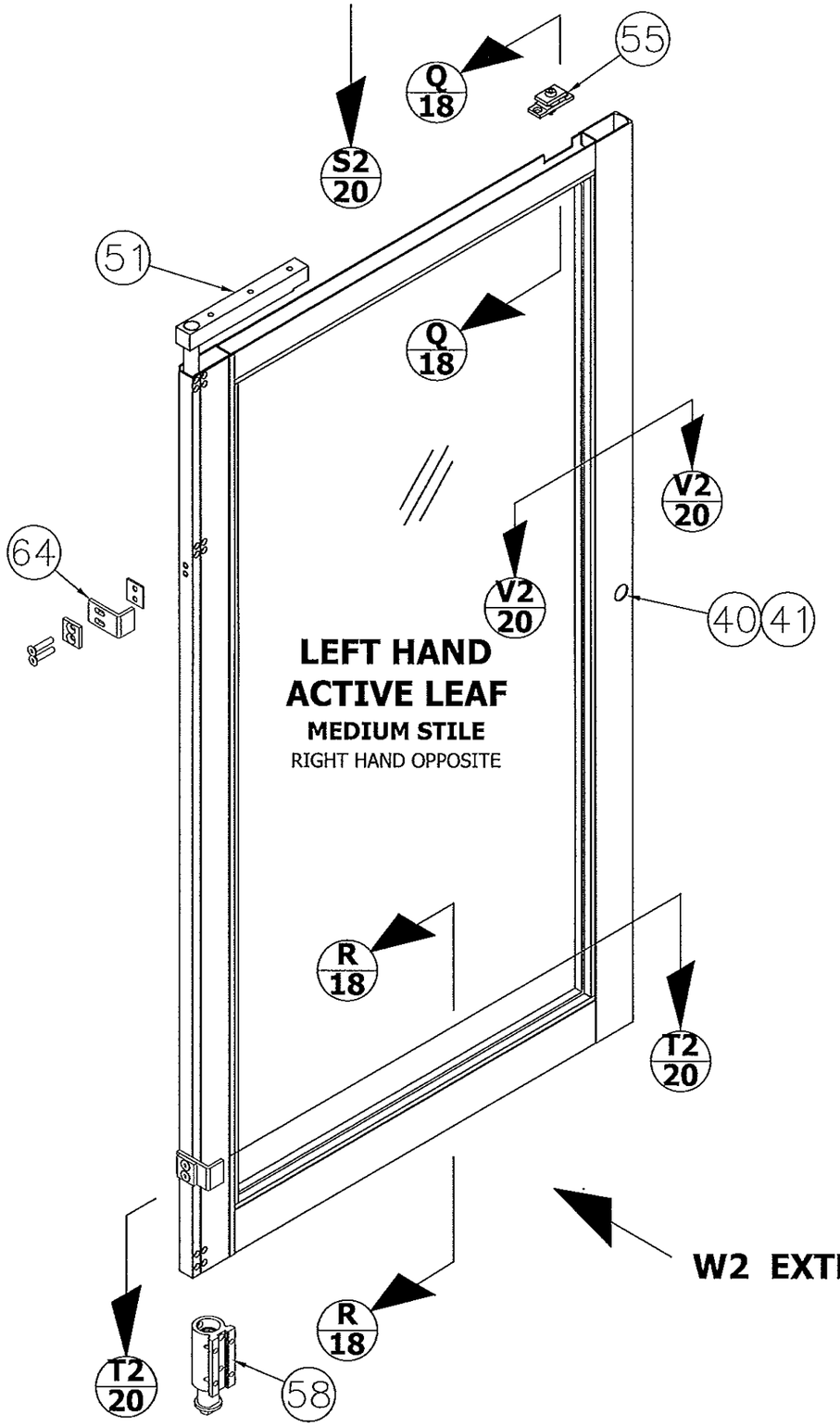

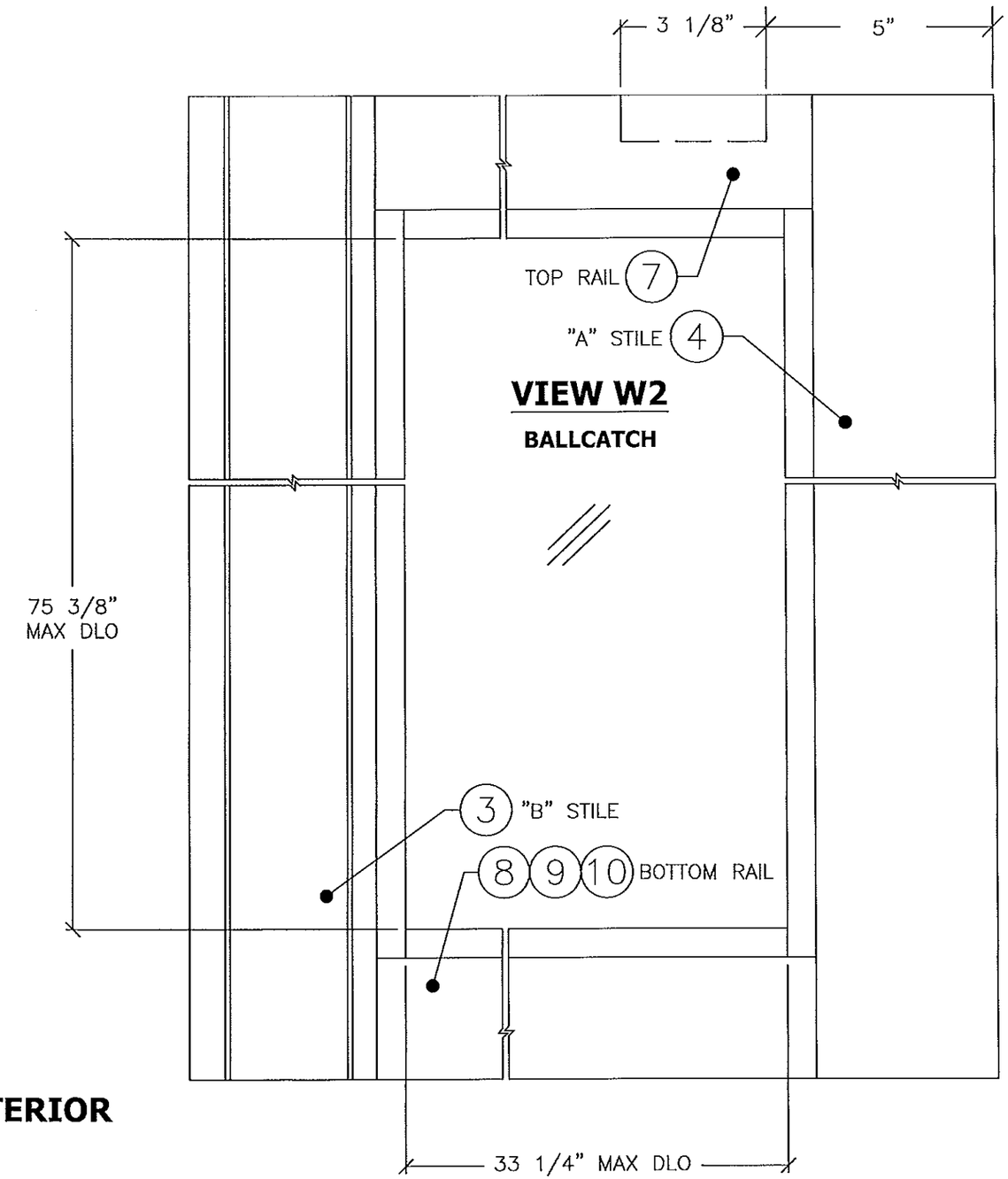

PROJECT #412-1016

REV	DESCRIPTION	DATE	BY
D	CORPORATE NAME CHANGE AND ADDITION OF NEW COSMETIC COMPONENT	12/14/12	RJA
C	UPDATED TO 2010 FBC	03/01/12	JBH
B	INCORPORATE MD-BCCO RFI COMMENTS	09/17/10	DAW

ASSA ABLOY ENTRANCE SYSTEMS US INC.
1900 AIRPORT ROAD
MONROE, NORTH CAROLINA 28110

TITLE: BESAM RESILIENCE FBO IMPACT DOOR SYSTEM
MEDIUM STILE ACTIVE-LITE DETAIL

DRAWN BY: SMC | DATE: 02/09/10
SCALE: N.T.S. | DRAWING NO: BES0006
REV: D | SHEET: 19 OF 26

PTC Product Design Group, LLC
P.O. Box 520775
Longwood, FL 32752-0775
FBPE C.A. NO. 25935
Phone: 321.690.1788
Fax: 321.690.1788
Email: info@ptc-corp.com

PRODUCT REVIEWED
as complying with the Florida
Building Code
Acceptance No 12-0524.07
Expiration Date 11/6/15
By [signature]
Miami Dade Product Control

Robert J. Amoruso, P.E.
Florida P.E. No. 49752

ROBERT JAMES AMORUSO
LICENSE
No 49752
STATE OF FLORIDA
PROFESSIONAL ENGINEER
9/19/13

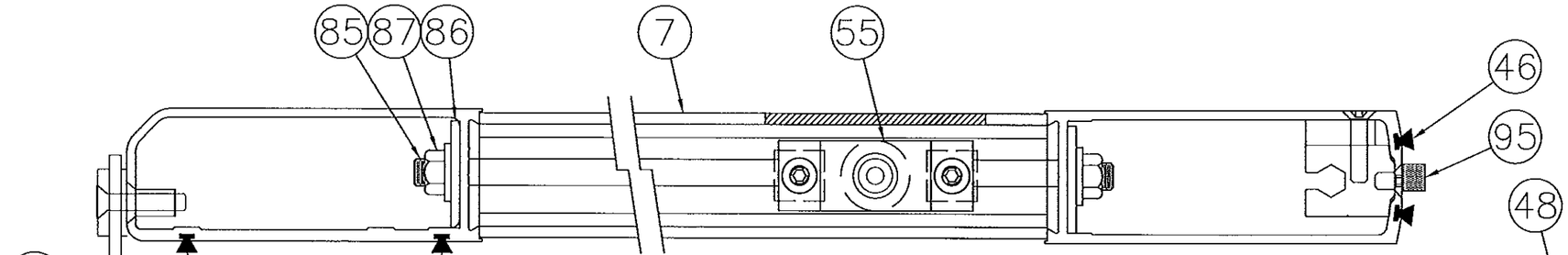

VIEW S3
ITEM #51 REMOVED
FOR CLARITY

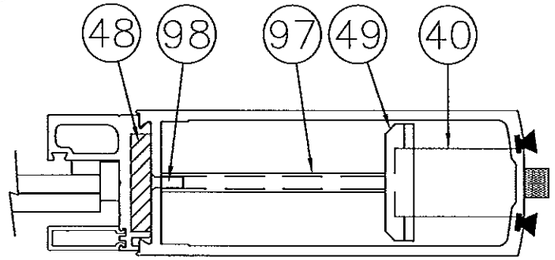

SECTION V3-V3

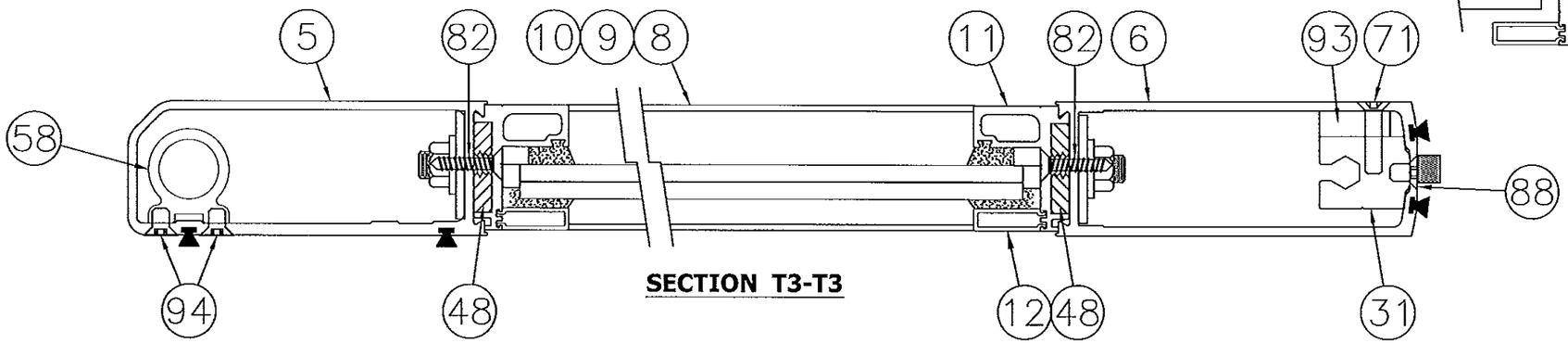

SECTION T3-T3

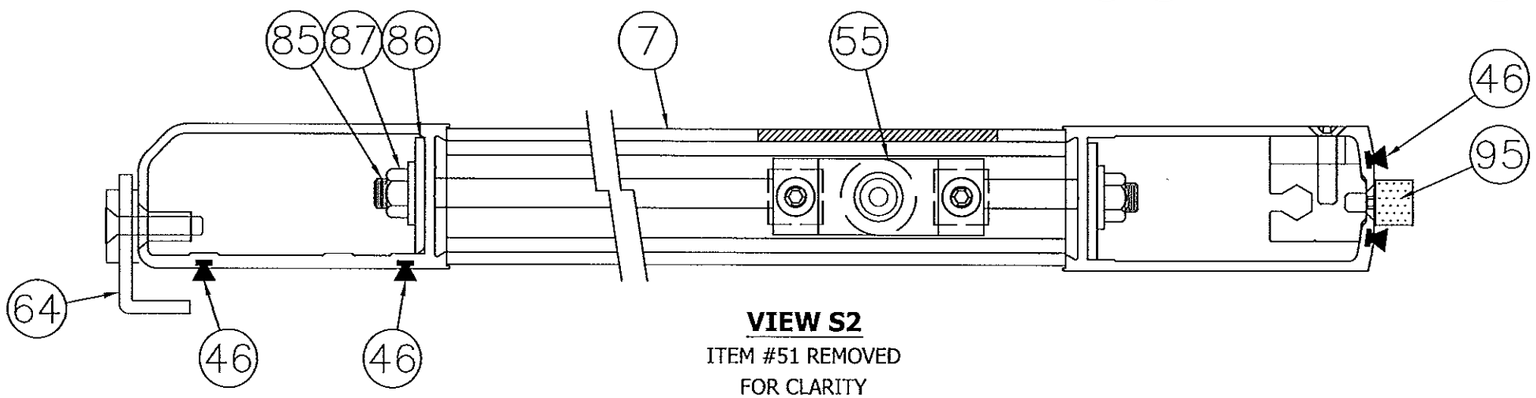

VIEW S2
ITEM #51 REMOVED
FOR CLARITY

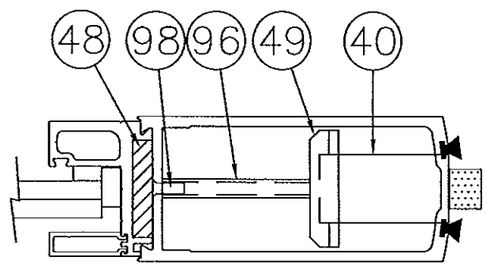

SECTION V2-V2

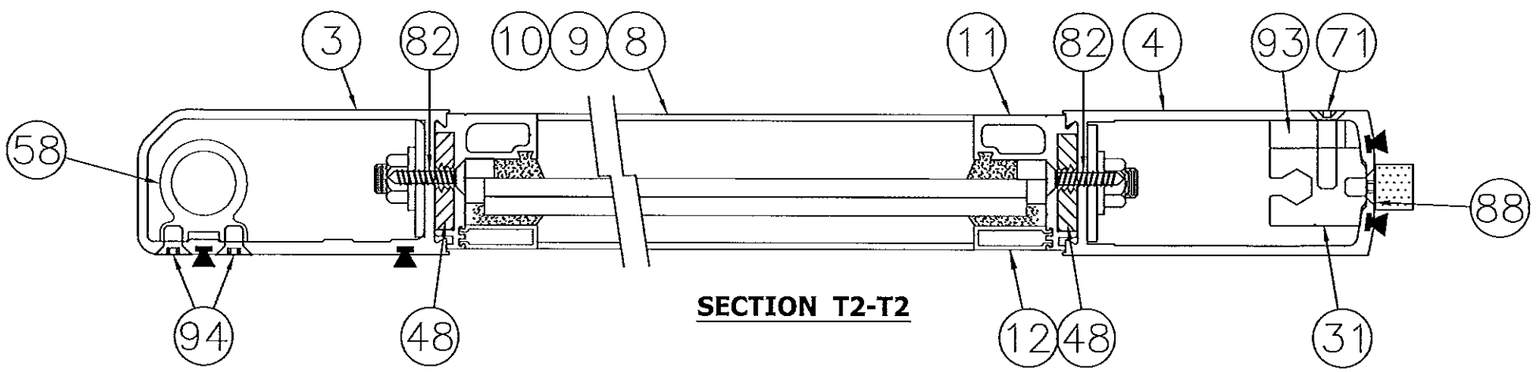

SECTION T2-T2

REV	DESCRIPTION	DATE	BY
D	CORPORATE NAME CHANGE AND ADDITION OF NEW COSMETIC COMPONENT	12/14/12	RJA
C	UPDATED TO 2010 FBC	03/01/12	JBH
B	INCORPORATE MD-SCCO RFI COMMENTS	09/17/10	DAW

PROJECT #412-1016

ASSA ABLOY ENTRANCE SYSTEMS US INC.
1900 AIRPORT ROAD
MONROE, NORTH CAROLINA 28110

TITLE: BESAM RESILIENCE FBO IMPACT DOOR SYSTEM
MED & WIDE STILE ACTIVE-LITE SECTIONS

DRAWN BY: SMC
DATE: 02/09/10
SCALE: N.T.S.
DRAWING NO: BES0006
REV: D
SHEET: 20 OF 26

PTC Product Design Group, LLC
P.O. Box 630770
Longwood, FL 32752-0775
FBPE C.A. NO. 25935
Phone: 321.690.1788
Fax: 321.690.1789
Email: info@ptc-corp.com

PRODUCT REVISED
as complying with the Florida
Building Code
Acceptance No 13-0924.07
Expiration Date 11/4/15
By
Official Date Product Control

Robert J. Amoruso, P.E.
Florida P.E. No. 49752

ROBERT JAMES AMORUSO
LICENSE
No 49752
9/19/13
STATE OF
FLORIDA
PROFESSIONAL ENGINEER

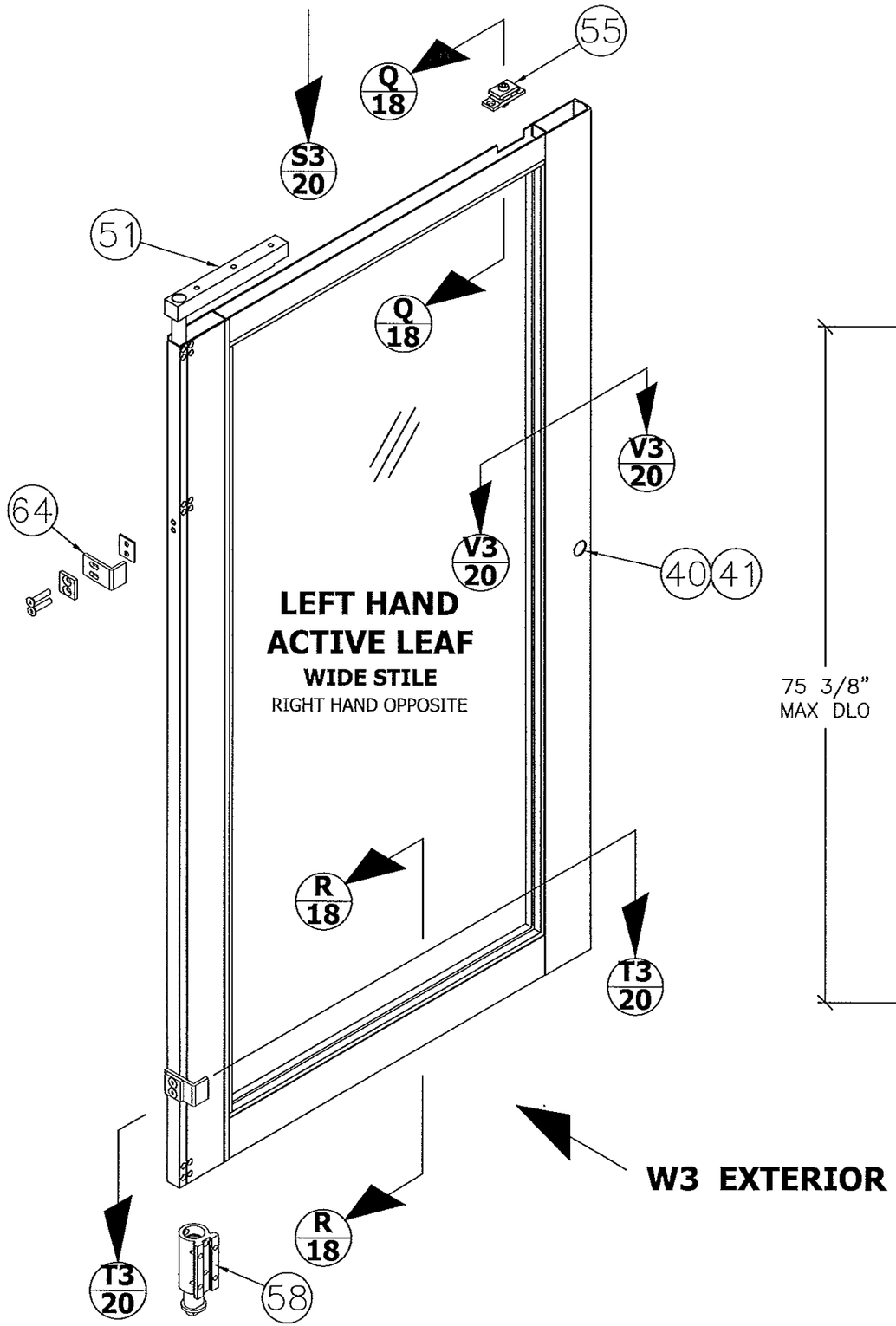

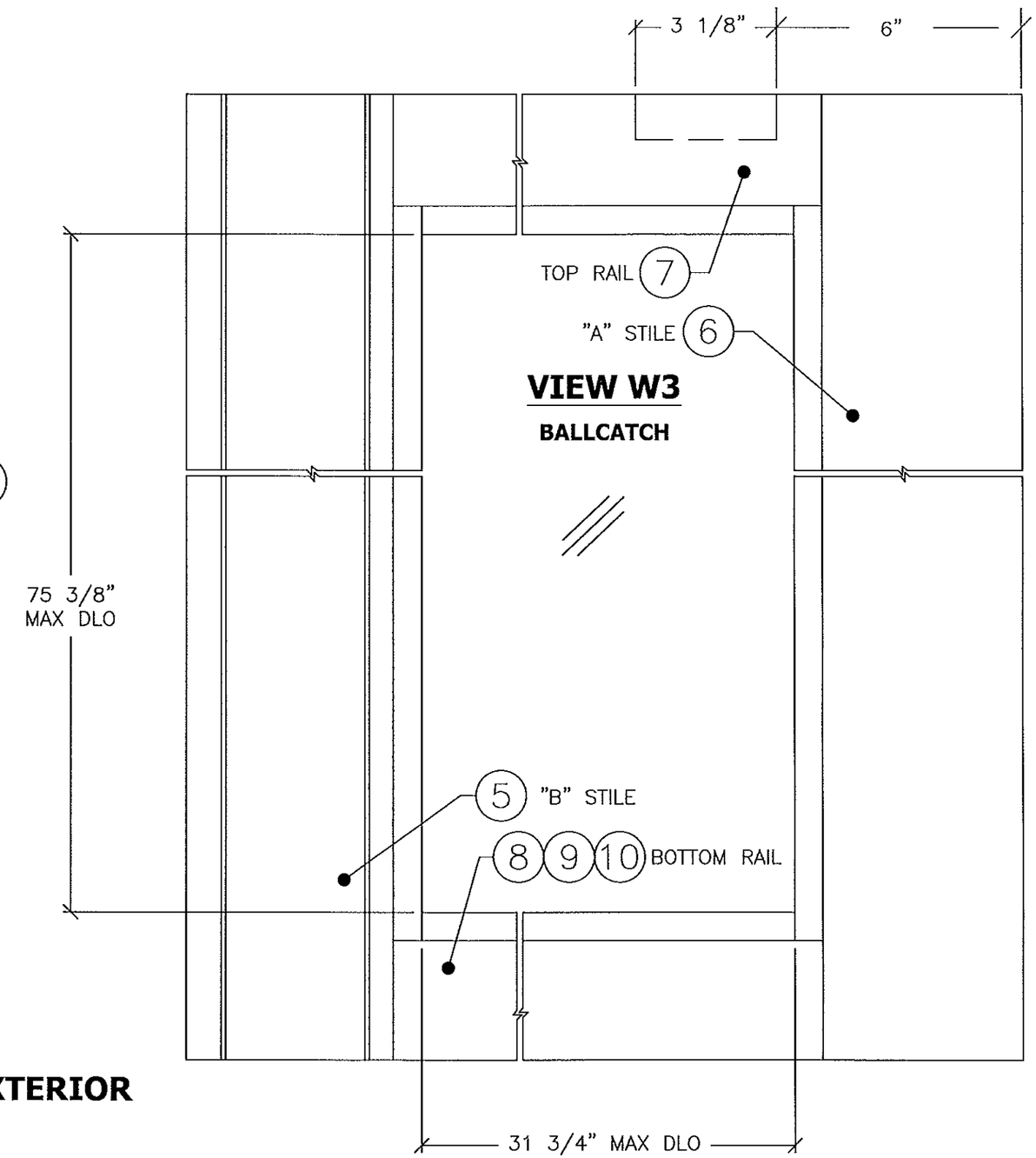

PROJECT #412-1016

REV	DESCRIPTION	DATE	BY
D	CORPORATE NAME CHANGE AND ADDITION OF NEW COSMETIC COMPONENT	12/14/12	RJA
C	UPDATED TO 2010 FBC	03/01/12	JBH
B	INCORPORATE MD-BCCO RFI COMMENTS	09/17/10	DAW

ASSA ABLOY ENTRANCE SYSTEMS US INC.
1900 AIRPORT ROAD
MONROE, NORTH CAROLINA 28110

TITLE: BESAM RESILIENCE FBO IMPACT DOOR SYSTEM
WIDE STILE ACTIVE-LITE DETAIL

DRAWN BY: SMC
DATE: 02/09/10
SCALE: N.T.S.
DRAWING NO: BES0006
REV: D
SHEET: 21 OF 26

PTC Product Design Group, LLC
PO Box 520775
Longwood, FL 32752-0775
FBPE C.A. NO. 25835
Phone: 321.690.1788
Fax: 321.690.1789
Email: info@ptc-corp.com

PRODUCT REVISED
as complying with the Florida
Building Code
Acceptance No 12-0924.07
Expiration Date 11/9/13
By [illegible]
Mfrd Date Product Control

Robert J. Amoruso, P.E.
Florida P.E. No. 49752

ROBERT JAMES AMORUSO
LICENSE
No 49752
9/19/13
STATE OF
FLORIDA
PROFESSIONAL ENGINEER

besam
ASSA ABLOY

BESAM RESILIENCE FULL BREAKOUT BI-PART LARGE & SMALL MISSLE IMPACT DOOR SYSTEM ITEM NO. 42 - ADAMS RITE G86 (8600) EXIT DEVICE EXTRUSION DETAILS - INTERIOR EXTRUSION

EXTRUSION
PUSH BAR G8X

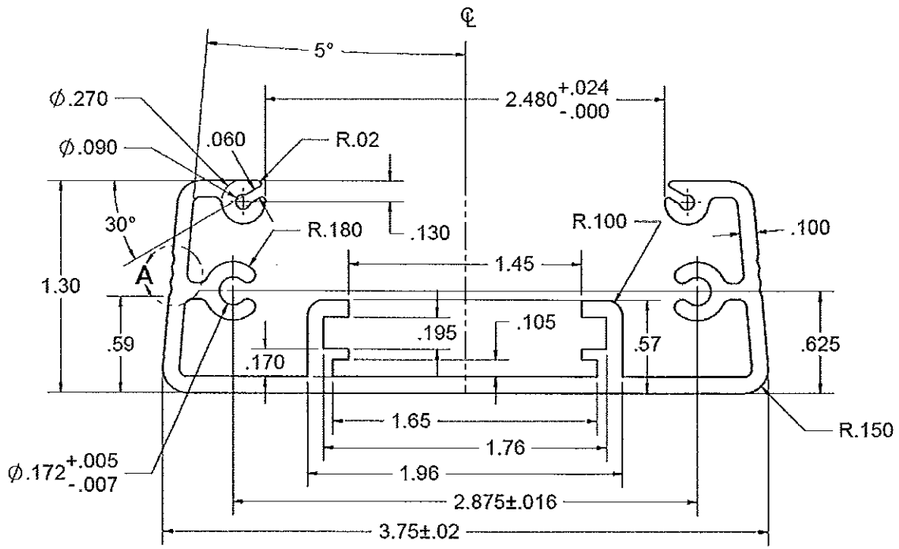

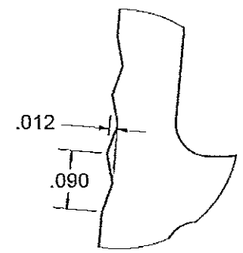

DETAIL A
SCALE 8 : 1

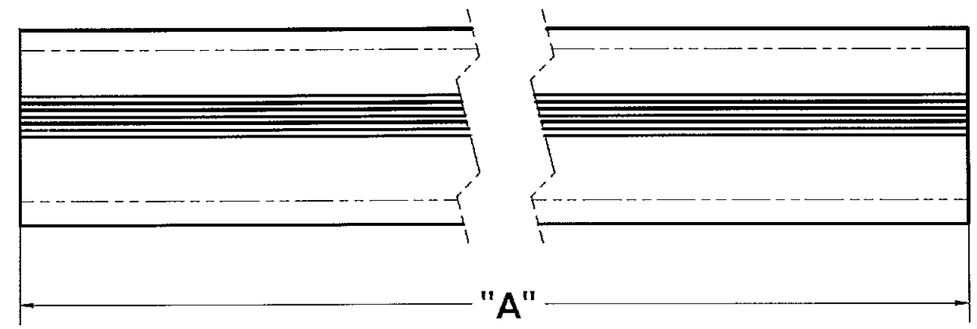

6. POST BAKE: NONE.
5. FINISH: 60 RMS OR BETTER.
4. HEAT TREAT: NONE.
3. MATERIAL: 6063-T6 ALUMINUM. (13'-8" LONG).
2. BREAK ALL SHARP EDGES.
1. ALL DIMENSIONS ARE FINISHED DIMENSIONS.

NOTES: UNLESS OTHERWISE SPECIFIED.

P/N	DIM "A"
24-0870-30-XXX	26.125
24-0870-36-XXX	32.125
24-0870-42-XXX	38.125
24-0870-48-XXX	44.125

PROJECT #412-1016

REV	DESCRIPTION	DATE	BY
D	CORPORATE NAME CHANGE AND ADDTION OF NEW COSMETIC COMPONENT	12/14/12	RJA
C	UPDATED TO 2010 FBC	03/01/12	JBH
B	INCORPORATE MD-BCCO RFI COMMENTS	09/17/10	DAW

ASSA ABLOY ENTRANCE SYSTEMS US INC.
1900 AIRPORT ROAD
MONROE, NORTH CAROLINA 28110

TITLE: BESAM RESILIENCE FBO IMPACT DOOR SYSTEM
ADAMS RITE 8600 EXTRUSION DETAILS

DRAWN BY: SMC
DATE: 02/09/10
SCALE: N.T.S.
DRAWING NO: BES0006
REV: D
SHEET: 22 OF 26

PTC Product Design Group, LLC
PO Box 520775
Longwood, FL 32752-0775
FBPE C.A. NO. 25935
Phone: 321.690.1788
Fax: 321.690.1789
Email: info@ptc-corp.com

PRODUCT REVISED
as complying with the Florida
Building Code
Acceptance No 13-0924.07
Expiration Date 11/4/15
By Ishaq I. Chaya
Miami Dade Product Control

Robert J. Amoruso, P.E.
Florida P.E. No. 49752

ROBERT JAMES AMORUSO
LICENSE
No 49752
9/9/13
STATE OF
FLORIDA
PROFESSIONAL ENGINEER

besam
ASSA ABLOY

BESAM RESILIENCE FULL BREAKOUT BI-PART LARGE & SMALL MISSLE IMPACT DOOR SYSTEM ITEM NO. 42 - ADAMS RITE G86 (8600) EXIT DEVICE EXTRUSION DETAILS - EXTERIOR EXTRUSION

EXTRUSION
PUSH BAR G8X

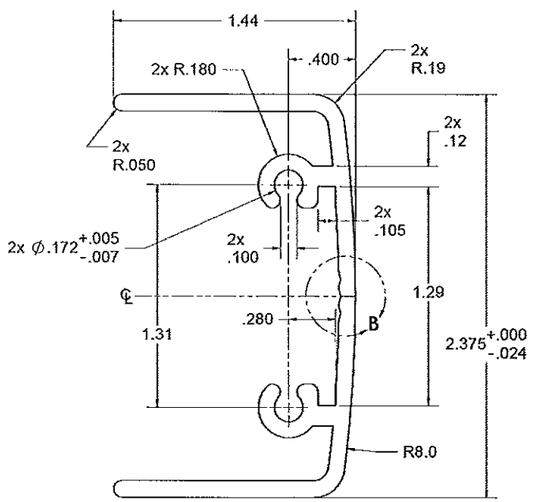

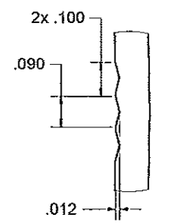

DETAIL B
SCALE 4 : 1

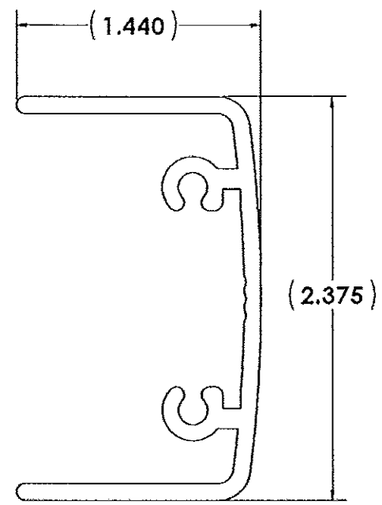

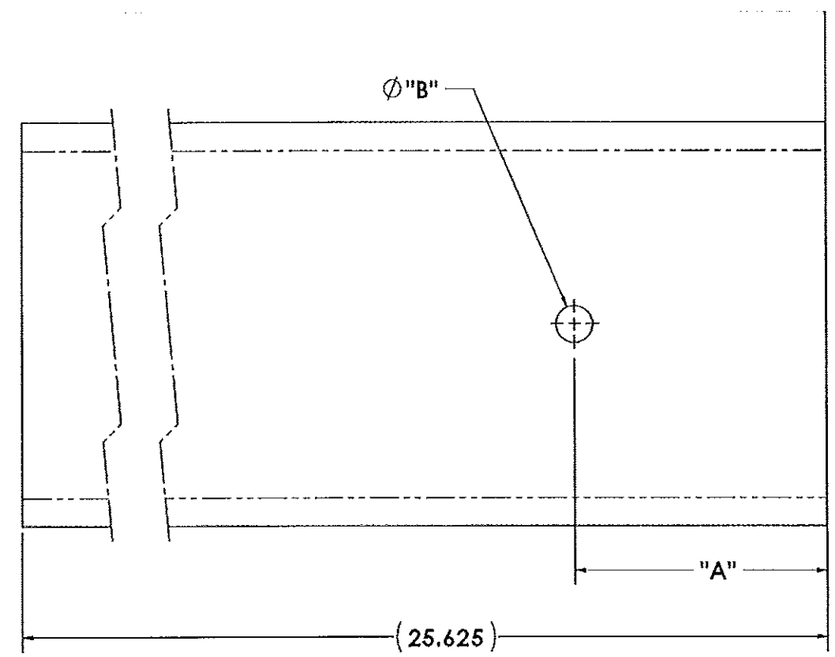

6. POST BAKE: NONE.
5. FINISH: 60 RMS OR BETTER.
4. HEAT TREAT: NONE.
3. MATERIAL: 6063-T6 ALUMINUM. (13'-8" LONG).
2. BREAK ALL SHARP EDGES.
1. ALL DIMENSIONS ARE FINISHED DIMENSIONS.

NOTES: UNLESS OTHERWISE SPECIFIED.

P/N	DIM "A"	DIM "B"
24-0871-XXX	1.500	0.218
24-0871CXXX	2.375	1.375

PROJECT #412-1016

REV	DESCRIPTION	DATE	BY
D	CORPORATE NAME CHANGE AND ADDTION OF NEW COSMETIC COMPONENT	12/14/12	RJA
C	UPDATED TO 2010 FBC	03/01/12	JBH
B	INCORPORATE MD-BCCO RFI COMMENTS	09/17/10	DAW

ASSA ABLOY ENTRANCE SYSTEMS US INC.
1900 AIRPORT ROAD
MONROE, NORTH CAROLINA 28110

TITLE: BESAM RESILIENCE FBO IMPACT DOOR SYSTEM
ADAMS RITE 8600 EXTRUSION DETAILS

DRAWN BY: SMC
DATE: 02/09/10
SCALE: N.T.S.
DRAWING NO: BES0006
REV: D
SHEET: 23 OF 26

PTC Product Design Group, LLC
PO Box 520775
Longwood, FL 32752-0775
FB/PE C.A. NO. 25925
Phone: 321.890.1788
Fax: 321.890.1789
Email: info@ptc-corp.com

PRODUCT REVISED
as complying with the Florida
Building Code
Acceptance No 13-0524.07
Expiration Date 11/1/15
By
Effective Date Product Control

Robert J. Amoruso, P.E.
Florida P.E. No. 49752

ROBERT JAMES AMORUSO
LICENSE
No 49752
9/19/13
STATE OF
FLORIDA
PROFESSIONAL ENGINEER

besam®
ASSA ABLOY

BESAM RESILIENCE FULL BREAKOUT BI-PART LARGE & SMALL MISSLE IMPACT DOOR SYSTEM ITEM NO. 42 - ADAMS RITE G86 (8600) EXIT DEVICE INSTALLATION DETAIL - SHEET 1

1. Prepare doors as shown. This product must be installed according to all applicable building and life safety codes.

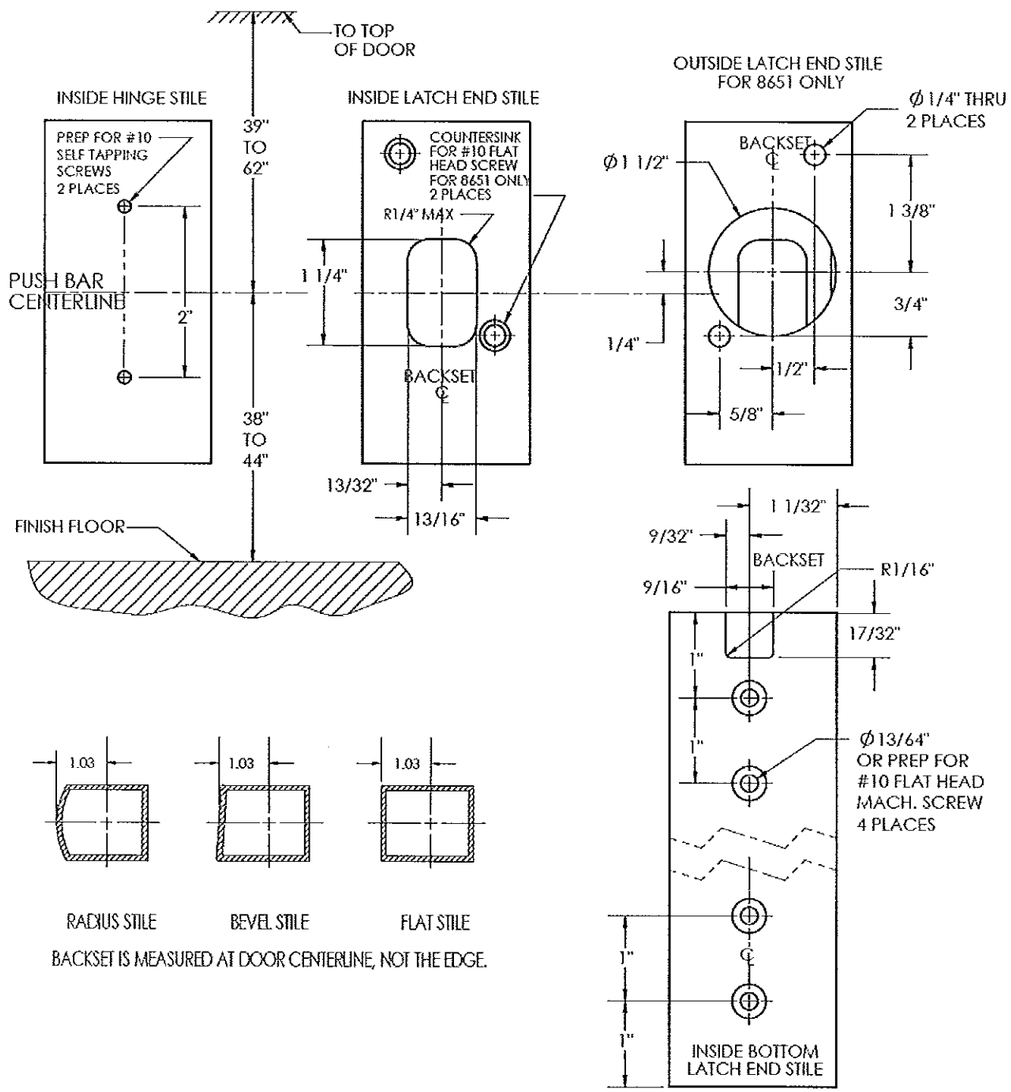

BACKSET IS MEASURED AT DOOR CENTERLINE, NOT THE EDGE.

2. Pre-adjust rod assembly.
   a. Lay rod assembly on the face of the door with center block protruding into installation hole.
   b. Fully extend rods as shown.

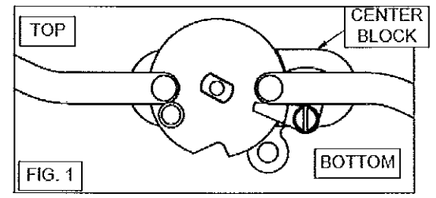

   c. Adjust bottom bolt for 5/8" projection from bottom of door.

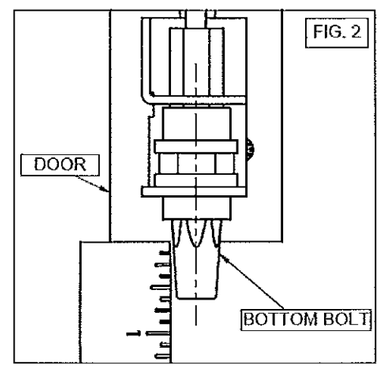

   d. Set the top bolt for 5/8" projection from top of door.

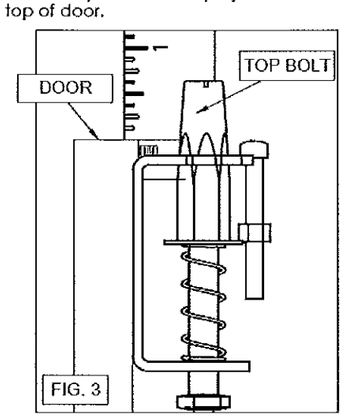

3. Install rod assembly
   Note: Be careful not to bend the rods when handling.
   a. Turn over and insert rod assembly into door from the top of the door.
   b. The bolts should extend beyond the stile.

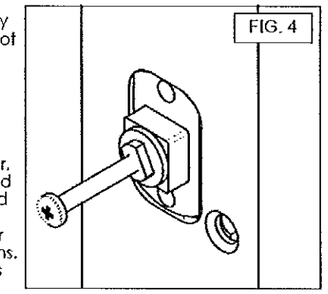

4. Cutting the bar for custom door widths.
   a. The push bar is the correct length for a minimum door width of 30" and does not require cutting.
   b. The back bar comes in two standard lengths for 48" and 36" doors. For other door widths, the back bar and cover strip needs to be cut. You will need to cut the same amount from both the back bar and cover strip. And it is recommended to cut them at the same time using a fine tooth blade or panel saw blade. When measuring the back bar length, make sure it will overlap the vertical stiles by atleast 1/8" on both sides. The mounting plates on either side are meant to pinch the back bar against the stiles to prevent noise.
5. Insert the back bar onto the scissor cartridge from the scissor end and slide up to within 2" of the lock end.
6. Secure center block
   a. You may have to pull bottom bolt down to align center block with cutout.
   b. Install a screw #6-32x2" into the center block as shown to aid in pulling and holding the center block into position.
   c. Locate the center block in the rectangular hole.
   d. If you are installing an exterior key cylinder, see step 20.
   e. Align the protruding square of the center block with the square hole in mounting plate and place onto the center block.

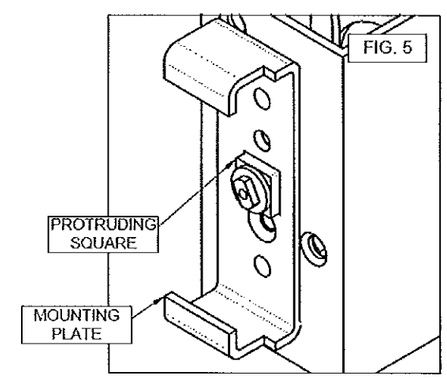

REV	DESCRIPTION	DATE	BY
D	CORPORATE NAME CHANGE AND ADDITION OF NEW COSMETIC COMPONENT	12/14/12	RJA
C	UPDATED TO 2010 FBC	03/01/12	JBH
B	INCORPORATE MD-BCCO RFI COMMENTS	08/17/10	DAW

PROJECT #412-1016

ASSA ABLOY ENTRANCE SYSTEMS US INC.
1900 AIRPORT ROAD
MONROE, NORTH CAROLINA 28110

TITLE: BESAM RESILIENCE FBO IMPACT DOOR SYSTEM
ADAMS RITE 8600 INSTALLATION DETAILS

DRAWN BY: SMC
DATE: 02/09/10
SCALE: N.T.S.
DRAWING NO: BES0006
REV: D
SHEET: 24 OF 26

PTC Product Design Group, LLC
P.O. Box 520775
Longwood, FL 32752-0775
FBPE C.A. NO. 28365
Phone: 321.690.1788
Fax: 321.690.1789
Email: info@ptc-corp.com

PRODUCT REVISED
as complying with the Florida Building Code
Acceptance No. 13-0924.07
Expiration Date 11/14/15
By
Miami-Dade Product Control

Robert J. Amoruso, P.E.
Florida P.E. No. 49752

ROBERT JAMES AMORUSO
LICENSE
No 49752
STATE OF FLORIDA
PROFESSIONAL ENGINEER
9/9/13

besam®
ASSA ABLOY

BESAM RESILIENCE FULL BREAKOUT BI-PART LARGE & SMALL MISSLE IMPACT DOOR SYSTEM ITEM NO. 42 - ADAMS RITE G86 (8600) EXIT DEVICE INSTALLATION DETAIL - SHEET 2

f. Place scissor cartridge on center block and secure with two 10-32 x 3/4" flat head machine screws.

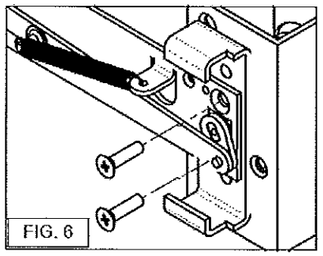
FIG. 6

7. Secure crank arm
   a. Remove helper screw.
   b. Align crank arm with shaft. You may have to operate the push bar sciccors to align tab with slot .
   c. Secure with one 6-32 x 1/4" truss head machine screw.

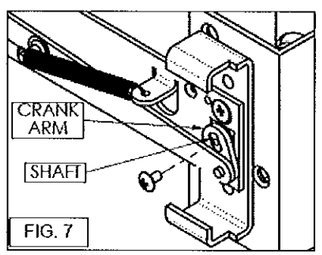

FIG. 7

8. Insert mounting plate from the hinge side onto the back bar and secure with two 10-32 x 3/4" self-tapping screws on the triangle side stile.

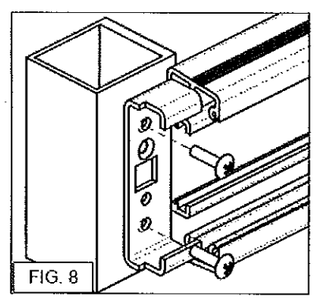
FIG. 8

9. Insert push bar and secure end caps with four 10-32 x 1/2" self-tapping screws.

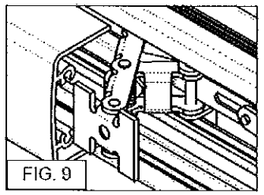
FIG. 9

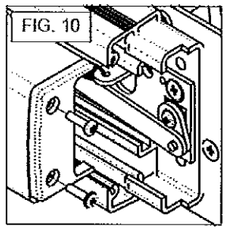
FIG. 10

10. Insert cover strip into back bar. Push in until flush with back bar extrusion.

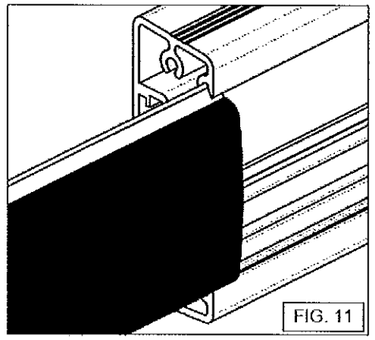
FIG. 11

11. Install base caps and secure with four 10-32 x 2" self-tapping screws.

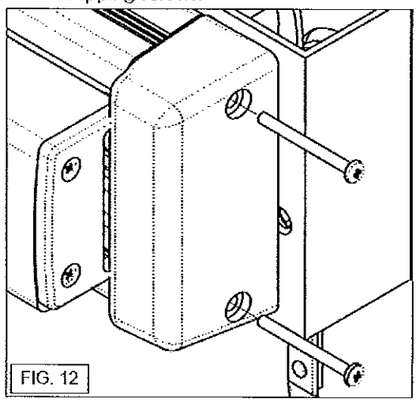
FIG. 12

12. Insert bottom bolt (Fig. 13) guide with the plastic guide towards the bottom. And secure with two 10-32x1/2" flat head machine screws. The bottom screw will lock the bottom bolt adjustment, leave this screw loose until final adjustment.

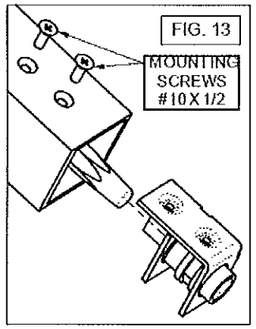

FIG. 13

13. Secure top latch (Fig. 14) assembly
    a. If necessary, depress the jam sensor to release the top bolt.
    b. Secure with two 10-32 x 1/4" flat head machine screws.
14. Check operation:
    a. Fully depress the push bar and release.
    b. Top bolt will retract & latch.
    c. If it doesn't hold - adjust top bolt stop screw out until top bolt is retained.
    d. When the push bar is completely pushed in and then released, you should see about 1/16" movement of the top bolt.

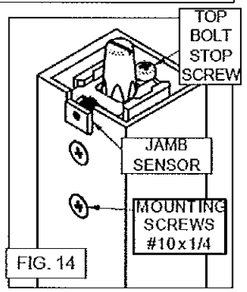

FIG. 14

15. Check operation: push top jam sensor.
    a. Top bolt will project.
    b. If it doesn't - check rods for binding.
16. Now install the door into the frame.
17. Mark the locations for the bolt holes very carefully.
    a. Misalignment of these holes will prevent the bolts from fully traveling into the deadlocked position.
    b. Don't forget to allow for weather stripping.
18. Drill Ø9/16" holes where required.
19. Now close the door and repeat step 13 - check operation.
20. If you have excessive door gaps at the top or bottom, you may adjust the bolts for greater engagement with the header or threshold.
    a. Open the door.
    b. Top Adjusment:
       i. Measure the door gap at the header. (example: 1/4")
       ii. Add to this measurement 1/2" (example: 1/4"+1/2"=3/4")
       iii. Push in push bar to retract the top latch.
       iv. Adjust the top bolt to extend above the door by sum above. (example: 3/4")
       v. Repeat step 14.
    c. Bottom Adjustment:
       i. Loosen the bottom mounting screw of the bottom bolt guide.
       ii. Turn the bolt until there is approximately 1/16" to 1/8" clearance.
       iii. Secure the bottom mounting screw.
21. Installing Key Cylinder. (Fig. 15)
    a. Once you have completed Step 5, assemble the cylinder escutcheon as shown using the appropriate number of spacers to prevent the cylinder cam from bottoming out on the center block assembly.

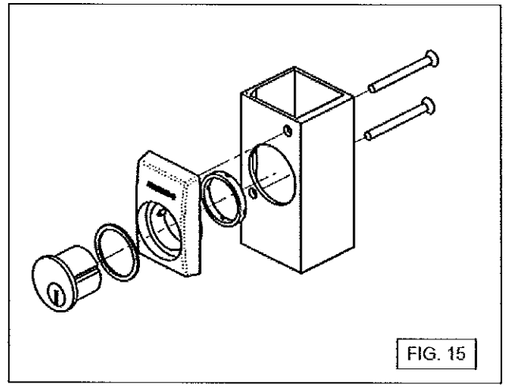
FIG. 15

    b. Secure the cylinder escutcheon assembly to the stile with the 2" long flat head screws provided. Note: the lower screw nests into a boss in the center block. (Fig. 16)
    c. Once the installation is complete, check operation by turning the key a quarter turn counter clockwise to 'open' the door. Remove the key and close the door, it should lock.
    d. To dog the bolts 'open', hold the door open and turn the key clockwise until stop. Check by closing the door, it should remain unlocked. To reset the lock from the dogged position, use the key to 'open' the door.

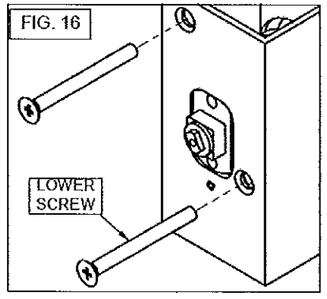

FIG. 16

PROJECT #412-1016

REV	DESCRIPTION	DATE	BY
D	CORPORATE NAME CHANGE AND ADDITION OF NEW COSMETIC COMPONENT	12/14/12	RJA
C	UPDATED TO 2010 FBC	03/01/12	JBH
B	INCORPORATE MD-BCCO RFI COMMENTS	09/17/10	DAW

ASSA ABLOY ENTRANCE SYSTEMS US INC.
1900 AIRPORT ROAD
MONROE, NORTH CAROLINA 28110

TITLE: BESAM RESILIENCE FBO IMPACT DOOR SYSTEM
ADAMS RITE 8600 INSTALLATION DETAILS

DRAWN BY: SMC | DATE: 02/09/10
SCALE: N.T.S. | DRAWING NO: BES0006
REV: D | SHEET: 25 OF 26

PTC Product Design Group, LLC
PO Box 520775
Longwood, FL 32752-0775
FBPE C.A. NO. 28905
Phone: 321.690.1788
Fax: 321.690.1788
Email: info@ptc-corp.com

PRODUCT REVISED
as complying with the Florida Building Code
Acceptance No 13-0924.07
Expiration Date 11/1/17
By Miami Dade Product Control

Robert J. Amoruso, P.E.
Florida P.E. No. 49752

ROBERT JAMES AMORUSO
LICENSE
No 49752
STATE OF FLORIDA
PROFESSIONAL ENGINEER
11/19/13

besam
ASSA ABLOY

BESAM RESILIENCE FULL BREAKOUT BI-PART LARGE & SMALL MISSLE IMPACT DOOR SYSTEM BILL OF MATERIALS

ITEM	PART NUMBER	DESCRIPTION	EXTRUSION	MATERIAL
1	US01-0405	NARROW STILE "B"	US01-0405	6063-T5
2	US01-0408	NARROW STILE "A"	US01-0408	6063-T5
3	US01-0406	MEDIUM STILE "B"	US01-0406	6063-T5
4	US01-0502	MEDIUM STILE "A"	US01-0502	6063-T6
5	US01-0407	WIDE STILE "B"	US01-0407	6063-T5
6	US01-0568	WIDE STILE "A"	US01-0658	6063-T6
7	US01-0411	2-1/2" TOP RAIL	US01-0411	6063-T5
8	US01-0412	4" TOP/BTM RAIL	US01-0412	6063-T5
9	US01-0417	5" BOTTOM RAIL	US01-0417	6063-T5
10	US01-0416	7" BOTTOM RAIL	US01-0416	6063-T5
11	US01-1603	GUTTER	US01-1603	6063-T6
12	US01-1605	GLASS STOP	US01-1605	6063-T6
13	US01-0425	JAMB	US01-0425	6063-T6
14	US01-0426	JAMB COVER	US01-0426	6063-T5
15	US01-1655	SHEAR PLATE	US01-1655	6063-T6
16	US01-0282	MOUNTING BLOCK	US01-0282	6063-T5
17	US01-0294	PLANK	US01-0294	6063-T6
18	US01-0295	BEAM	US01-0295	6063-T6
19A	US01-0296	COVER - UNISLIDE (OPTION 1)	US01-0296	6063-T6
19B	1009858	COVER - SL500 (OPTION 2)	1009858	6063-T6
20A	US01-0326	SENSOR CAP - UNISLIDE (OPTION 1)	US01-0326	6063-T5
20B	1008139	SENSOR CAP - SL500 (OPTION 2)	1008139	6063-T5
21	US01-0352	PLANK CAP	US01-0352	6063-T6
22	US01-0600	COVER LATCH	US01-0600	6063-T5
23	US01-0601	LATCH ARM	US01-0601	6063-T5
24	US01-0516	THRESHOLD	US01-0516	6063-T5
25	US01-0645	THRESHOLD LEAD-UP (OPTIONAL)	US01-0645	6063-T6
26	US01-0290	CARRIER	US01-0290	66081-T6
27	US01-0626	LOCK BLOCK	US01-0626	6105-T5
28	US01-0790	BALL CATCH	US01-0790	6063-T6
29	US01-0277	PIVOT	US01-0277	6063-T5
30	US01-0663	PIVOT BLOCK	US01-0663	6063-T6
31	US01-0537	GUIDE BLOCK	US01-0537	6063-T6
32	US01-0794	PIN GUIDE BODY	US01-0794	6063-T5
33	US01-0684	SWEEP CLIP	US01-0684	6063-T5
34	US01-0685	SWEEP HOUSING	US01-0685	6063-T5
35	US01-0353	BEAM EXTENSION	US01-0353	6063-T6
36	US04-0801	THRESHOLD CAP	US01-0801	6063-T6

ITEM	PART NUMBER	DESCRIPTION	EXTRUSION	MATERIAL
40	1870-20-0XX	ADAMS RITE 1870 FLUSH BOLT		
41	4016-20-01	ADAMS RITE 4016 HEADER BOLT		
42	G86-11-XX	ADAMS RITE 8600 EXIT DEVICE.- OPTIONAL		
	NOTE: ITEMS 40-42 INCLUDE CONCEALED RODS			
43	US05-1630-01	SPRING ROD ASSEMBLY		
44	50-20-215	CONCEALED SWEEP		
45	50-20-6402	.187 X .350 PILE WS		
46	50-20-HD187DB	.187 X .370 FIN-SEAL WS		CRS
47	US03-0277-05	TOP PIVOT PLATE		1018 STL
48	US03-0358-00	VERTICAL RAIL REINFORCING		1018 STL
49	US03-0638-01	LOCK PLATE		1018 STL
50	US03-0642-00	PLANK BLOCK		
51	US05-0545-01	PSA ARM ASSEMBLY	US01-0626	6105-T5
52	US05-0626-01	LOCK PIN ASSEMBLY		
53	US05-0636-01	LOCK STRIKE ASSEMBLY	US01-0790	6063-T6
54	US05-0790-01	BALL CATCH KIT, AL CARRIER	US01-0790	6063-T6
55	US05-0790-04	BALL CATCH KIT, AL TOP RAIL	US01-0790	6063-T6
56	US05-0790-07	BALL CATCH KIT, SL TOP RAIL	US01-0790	6063-T6
57	US05-0790-10	BALL CATCH KIT, SL HEADER	US01-0794	6063-T5
58	US05-0796-03	PIN GUIDE ASSEMBLY		
59	US08-0659-01	SWEEP	US01-0277	6063-T5
60	US15-0277-02	PIVOT KIT, NARROW STILE	US01-0277	6063-T5
61	US15-0277-03	SIDELITE CONCEALED PIVOT ASSEMBLY		
62	US15-0285-02	PIVOT KIT, MED/WIDE STILE	US01-0277	6063-T5
63	US15-0947-01	BALL DETENT KIT		
64	US15-1613-01	INTERLOCK KIT		
65	US05-0519-01	WHEEL ASSEMBLY		
66	US05-0305-01	RING MAGNET ASSEMBLY		
67	US21-0954-01	COVER CLIP		
68	US21-0604-01	ANTI-RISER		
69	US21-0620	ROLLER TRACK	US21-0620	NYLON
70	UV1	CONCEALED SENSOR - OPTIONAL		
71	52-09-004	1/4-20 X 1" FHP TFS		
72	724476	M6 X 10 HEX FLANGE SCREW		
73	US09-0603-01	ANTI-RISER SCREW		
74	50-09-226	M6 X 12 SHCS		

ITEM	PART NUMBER	DESCRIPTION
75	04-09-726016	M6 HEX NUT
76	US09-0277-09	1/4-20 X 1 1/4" FHP MS
77	US09-0282-01	5/16-18 X 2 3/4" HEX BOLT
78	US09-0377-01	1/4-20 X 1 1/4" PHP MS
79	53-09-HF145SS	#14 X 5" PHP SCREW
80	US09-0851-01	1/4-20 X 1" FHP MS
81	50-09-HD3DB	#10 X 2" FHP TEK SCREW
82	50-09-HD1DB	#10 X 1" FHP TEK SCREW
83	50-25-001	RAIL CLIP
84	A28283	RAIL CLIP
85	50-09-100	3/8-16 ALL THREAD
86	50-03-045	STEEL WASHER
87	50-09-132	3/8-16 HEX FLANGE NUT
88	40-09-200	1/4-20 X 3/8" FHP UC MS
90	DOW 995	DOW CORNING 995 GLAZING SEALANT
91	SETTING BLOCK	3/8 X 1/4 X 1 EPDM BLOCK
92	SETTING BLOCK	1/2 X 1/4 X 1 EPDM BLOCK
93	US04-0641-01	SHIM
94	50-09-150	M6 X 10 FHCS
95	US20-1626-01	SEAL
96	US03-0727-01	STANDOFF
97	US03-0727-02	STANDOFF
98	US09-0728-01	#10-32 X 1/8" STUD
99	US03-0646-01	MOUNTING BLOCK STIFFENER

PROJECT #412-1016

REV	DESCRIPTION	DATE	BY
D	CORPORATE NAME CHANGE AND ADDITION OF NEW COSMETIC COMPONENT	12/14/12	RJA
C	UPDATED TO 2010 FBC	03/01/12	DAW
B	INCORPORATE MD-BCCO RFI COMMENTS	09/17/10	DAW

ASSA ABLOY ENTRANCE SYSTEMS US INC.
1900 AIRPORT ROAD
MONROE, NORTH CAROLINA 28110

TITLE: BESAM RESILIENCE FBO IMPACT DOOR SYSTEM
BILL OF MATERIALS

DRAWN BY: SMC
DATE: 02/09/10
SCALE: N.T.S.
DRAWING NO: BES0006
REV: D
SHEET: 26 OF 26

PTC Product Design Group, LLC
PO Box 520775
Longwood, FL 32752-0775
FBPE C.A. NO. 25935
Phone: 321.690.1798
Fax: 321.690.1799
Email: info@ptc-corp.com

PRODUCT REVISED
as complying with the Florida
Building Code
Acceptance No. 13-0924.07
Expiration Date 11/14/15
By
Florida Code Product Control

Robert J. Amoruso, P.E.
Florida P.E. No. 49752

ROBERT JAMES AMORUSO
LICENSE
No 49752
STATE OF
FLORIDA
PROFESSIONAL ENGINEER
9/19/13