MIAMI-DADE COUNTY
DEPARTMENT OF REGULATORY AND ECONOMIC RESOURCES (RER)
BOARD AND CODE ADMINISTRATION DIVISION

MIAMI-DADE COUNTY, FLORIDA
PRODUCT CONTROL SECTION
11805 SW 26 Street, Room 208
T (786) 315-2590 F (786) 315-2599
www.miamidade.gov/economy

NOTICE OF ACCEPTANCE (NOA)

Sunshine Windows Manufacturing, Inc.
1745 W. 33rd Place
Hialeah, FL 33012

SCOPE:

This NOA is being issued under the applicable rules and regulations governing the use of construction materials. The documentation submitted has been reviewed and accepted by Miami-Dade County RER-Product Control Section to be used in Miami-Dade County and other areas where allowed by the Authority Having Jurisdiction (AHJ).

This NOA shall not be valid after the expiration date stated below. The Miami-Dade County Product Control Section (In Miami-Dade County) and/ or the AHJ (in areas other than Miami-Dade County) reserve the right to have this product or material tested for quality assurance purposes. If this product or material fails to perform in the accepted manner, the manufacturer will incur the expense of such testing and the AHJ may immediately revoke, modify, or suspend the use of such product or material within their jurisdiction. RER reserves the right to revoke this acceptance, if it is determined by Miami-Dade County Product Control Section that this product or material fails to meet the requirements of the applicable building code.

This product is approved as described herein, and has been designed to comply with the Florida Building Code, including the High Velocity Hurricane Zone.

DESCRIPTION: Series "SWMI 9000 French" 9-Ft. A/ E Outswing Aluminum Glazed Door – L.M.I.

APPROVAL DOCUMENT: Drawing No. **W08-91**, titled "Series – 9000 Alum. Outswing French Door (L.M.I.)", sheets 1 through 10 of 10, dated 11/11/08, prepared by Al-Farooq Corporation with the latest revision "A", dated 03/29/12, signed and sealed by Javad Ahmad, P. E., bearing the Miami-Dade County Product Control Section Renewal stamp with the Notice of Acceptance number and Expiration date by the Miami-Dade County Product Control Section.

MISSILE IMPACT RATING: Large and Small Missile Impact Resistant

LIMITATIONS: The Single Door with Transom is limited to Maximum Design Pressure DP = ± 90 PSF.

LABELING: Each unit shall bear a permanent label with the manufacturer's name or logo, city, state, model/ series, and following statement: "Miami-Dade County Product Control Approved", unless otherwise noted herein.

REVISION of this NOA shall be considered after a renewal application has been filed and there has been no change in the applicable building code negatively affecting the performance of this product.

TERMINATION of this NOA will occur after the expiration date or if there has been a revision or change in the materials, use, and/ or manufacture of the product or process. Misuse of this NOA as an endorsement of any product, for sales, advertising or any other purposes shall automatically terminate this NOA. Failure to comply with any section of this NOA shall be cause for termination and removal of NOA.

ADVERTISEMENT: The NOA number preceded by the words Miami-Dade County, Florida, and followed by the expiration date may be displayed in advertising literature. If any portion of the NOA is displayed, then it shall be done in its entirety.

INSPECTION: A copy of this entire NOA shall be provided to the user by the manufacturer or its distributors and shall be available for inspection at the job site at the request of the Building Official.

This NOA **renews NOA No. 12-0314.14** and consists of this page 1 and evidence pages E-1 and E-2, as well as approval document mentioned above.

The submitted documentation was reviewed by **Jaime D. Gascon, P. E.**

MIAMI-DADE COUNTY APPROVED

JGascon 11/7/13

Sunshine Windows Manufacturing, Inc.

NOTICE OF ACCEPTANCE: EVIDENCE SUBMITTED

A. DRAWINGS

1. Manufacturer's die drawings and sections.
   (Submitted under previous NOA's No.'s 08–0813.04 and 09–0413.09)
2. Drawing No. **W08–91**, titled "Series – 9000 Alum. Outswing French Door (L.M.I.)", sheets 1 through 10 of 10, dated 11/11/08, prepared by Al–Farooq Corporation with the latest revision "**A**", dated 03/29/12, signed and sealed by Javad Ahmad, P. E.
   (Submitted under previous NOA No. 12–0314.14)

B. TESTS

1. Test reports on:
   1) Air Infiltration Test, per FBC, TAS 202–94
   2) Uniform Static Air Pressure Test, Loading per FBC TAS 202–94
   3) Water Resistance Test, per FBC, TAS 202–94
   4) Large Missile Impact Test per FBC, TAS 201–94
   5) Cyclic Wind Pressure Loading per FBC, TAS 203–94
   6) Forced Entry Test, Side–Hinged Door Systems, per FBC 2411 3.2.1, TAS 202–94 and per AAMA 1304–02

   along with marked–up drawings and installation diagram of an Aluminum Outswing Glass Door, prepared by Fenestration Testing Laboratory, Inc., Test Report No. **FTL–5552**, dated 09/09/09, signed and sealed by Marlin D. Brinson, P. E.
   (Submitted under previous NOA No. 09–0413.09)
2. Test reports on:
   1) Air Infiltration Test, per FBC, TAS 202–94
   2) Uniform Static Air Pressure Test, Loading per FBC TAS 202–94
   3) Water Resistance Test, per FBC, TAS 202–94
   4) Large Missile Impact Test per FBC, TAS 201–94
   5) Cyclic Wind Pressure Loading per FBC, TAS 203–94
   6) Forced Entry Test, Side–Hinged Door Systems, per FBC 2411 3.2.1, TAS 202–94 and per AAMA 1304–02

   along with marked–up drawings and installation diagram of an Aluminum Outswing Glass Door, prepared by Fenestration Testing Laboratory, Inc., Test Reports No.'s **FTL–5554** and **FTL–5556**, dated 05/10/08 and 04/27/08, both signed and sealed by Carlos S. Rionda, P. E.
   (Submitted under previous NOA No. 08–0813.04)

C. CALCULATIONS

1. Anchor verification calculations and structural analysis, complying with FBC, prepared by Al–Farooq Corporation, dated 06/09/08, with the latest revision dated 09/15/08, signed and sealed by Dr. Humayoun Farooq P. E.
   (Submitted under previous NOA No. 08–0813.04)
2. **Glazing complies with ASTM E1300–04**

Jaime D. Gascon, P. E.
Product Control Section Supervisor
NOA No. 13–1007.07
Expiration Date: October 30, 2018
Approval Date: November 14, 2013

NOTICE OF ACCEPTANCE: EVIDENCE SUBMITTED

D. QUALITY ASSURANCE

1. Miami–Dade Department of Regulatory and Economic Resources (RER).

E. MATERIAL CERTIFICATIONS

1. Notice of Acceptance No. **13–0129.27** issued to **E.I. DuPont DeNemours & Co., Inc.** for their **"DuPont Butacite® PVB Interlayer"** dated 04/11/13, expiring on 12/11/16.
2. Notice of Acceptance No. **11–0624.02** issued to **E.I. DuPont DeNemours & Co.**, Inc. for their "**DuPont SentryGlas® Interlayer**" dated 08/25/11, expiring on 01/14/17.

F. STATEMENTS

1. Statement letter of conformance, complying with **FBC–2010**, issued by Al–Farooq Corporation, dated December 30, 2013, signed and sealed by Javad Ahmad, P. E.
   (Submitted under previous NOA No. 12–0314.14)
2. Statement letter of no financial interest, conformance and compliance with the **FBC–2010**, prepared by Al–Farooq Corporation, dated 03/29/12, signed and sealed by Javad Ahmad, P. E.
   (Submitted under previous NOA No. 12–0314.14)
3. Private Labeling Agreement document in conformance to BCCO guidelines dated 04/09/09 signed by Jose Nunez.
   (Submitted under previous NOA No. 09–0413.09)
4. Laboratory compliance letter for the Test Report No. **FTL–5552**, dated 09/09/09, signed and sealed Marlin D. Brinson, P. E.
   (Submitted under previous NOA No. 09–0413.09)
5. Proposal No. **09–0165** issued by Product Control, dated 04/02/09, signed by Ishaq Chanda, P. E.
   (Submitted under previous NOA No. 09–0413.09)
6. Laboratory compliance letter for the Test Reports No.'s **FTL–5554** and **FTL–5556**, dated 05/10/08 and 04/27/08, both signed and sealed by Carlos S. Rionda, P. E.
   (Submitted under previous NOA No. 08–0813.04)
7. Proposal No. **07–4070** issued by Product Control, dated 02/22/08, signed by Ishaq Chanda, P. E.
   (Submitted under previous NOA No. 08–0813.04)

G. OTHERS

1. Notice of Acceptance No. **12–0314.14**, issued to Sunshine Windows Manufacturing, Inc. for their "Series SWMI 9000 9–Ft. A/ E Outswing Aluminum Glazed French Door – L.M.I.", approved on 05/24/12 and expiring on 10/30/13.

Jaime D. Gascón, P. E.
Product Control Section Supervisor
NOA No. 13–1007.07
Expiration Date: October 30, 2018
Approval Date: November 14, 2013

THESE DOORS ARE RATED FOR LARGE MISSILE IMPACT.
SHUTTERS ARE NOT REQUIRED.

SERIES 9000
ALUMINUM OUTSWING ENTRANCE DOOR

SEE CHARTS ON THIS SHEET FOR DESIGN LOAD CAPACITY OF SINGLE DOORS WITH OR WITHOUT TRANSOMS.

SEE CHARTS ON SHEET 2 FOR DESIGN LOAD CAPACITY OF DOUBLE DOORS WITH OR WITHOUT TRANSOMS.

DOORS CAN ALSO BE USED WITH SERIES 8000 OR SERIES 9500 STOREFRONT SYSTEM.
FOR DOORS WITH STOREFRONT SYSTEM SEE SEPARATE NOA FOR DOOR MULLION CAPACITY.

THE LOWEST VALUE RESULTING FROM DOOR CAPACITY CHARTS OR STOREFRONT NOA WILL APPLY TO ENTIRE SYSTEM.

DOORS NOT APPROVED FOR INSTALLATIONS WHERE WATER INFILTRATION RESISTANCE IS REQUIRED.

THIS PRODUCT HAS BEEN DESIGNED AND TESTED TO COMPLY WITH THE REQUIREMENTS OF THE FLORIDA BUILDING CODE INCLUDING HIGH VELOCITY HURRICANE ZONE (HVHZ).

1BY OR 2BY WOOD BUCKS BY OTHERS, MUST BE ANCHORED PROPERLY TO TRANSFER LOADS TO THE STRUCTURE.

ANCHORS SHALL BE AS LISTED, SPACED AS SHOWN ON DETAILS, ANCHORS EMBEDMENT TO BASE MATERIAL SHALL BE BEYOND WALL DRESSING OR STUCCO.

ANCHORING OR LOADING CONDITIONS NOT SHOWN IN THESE DETAILS ARE NOT PART OF THIS APPROVAL.

A LOAD DURATION INCREASE IS USED IN DESIGN OF ANCHORS INTO WOOD ONLY.

MATERIALS INCLUDING BUT NOT LIMITED TO STEEL/METAL SCREWS, THAT COME INTO CONTACT WITH OTHER DISSIMILAR MATERIALS SHALL MEET THE REQUIREMENTS OF THE FLORIDA BLDG. CODE SECTION 2003.8.4.

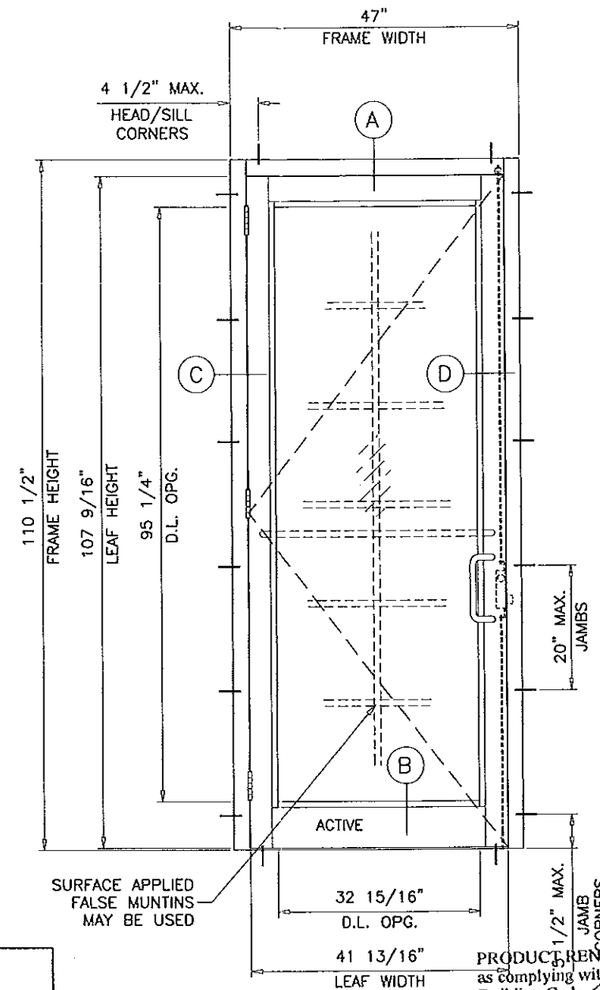

TYPICAL ELEVATION
(X)

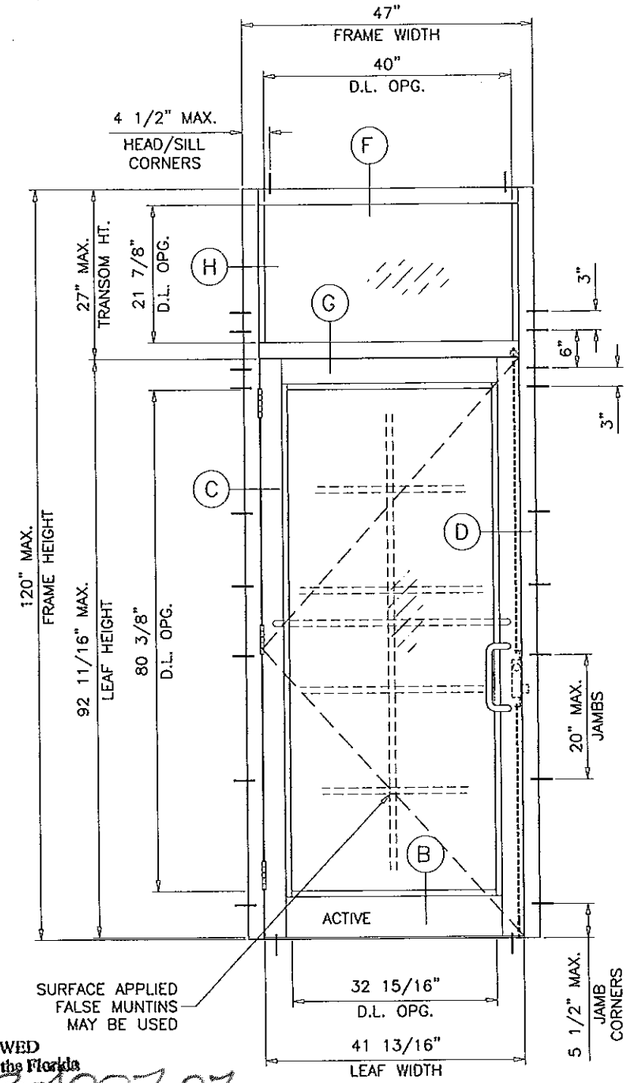

TYPICAL ELEVATION
(O/X)

PRODUCT RENEWED
as complying with the Florida
Building Code 13-1007.07
Acceptance No
Expiration Date 10/30/2018
By
Miami Dade Product Control

NOTE:
GLASS CAPACITIES ON THIS SHEET ARE BASED ON ASTM E1300-04 (3 SEC. GUSTS) AND FLORIDA BUILDING COMMISSION DECLARATORY STATEMENT DCA05-DEC-219

TABLE #1	DOORS LOAD CAPACITY – PSF SINGLE DOORS WITHOUT TRANSOM (X) OR WITH TRANSOM (O/X)							
DOOR DIMS.		GLASS		LOCKS			HINGES	
		TYPE 'A'	TYPE 'B'	OPTION #1	OPTION #2	OPTION #3	OPTION #1	OPTION #2
FRAME WIDTH	FRAME HEIGHT	EXT. (+) INT. (–)	EXT. (+) INT. (–)	EXT. (+) INT. (–)	EXT. (+) INT. (–)	EXT. (+) INT. (–)	EXT. (+) INT. (–)	EXT. (+) INT. (–)
47"	98-1/2"	80.0	120.0	80.0	90.0	120.0	80.0	120.0
47"	110-1/2"	80.0	120.0	80.0	90.0	120.0	80.0	120.0

SEE SHEET 2 FOR GLASS TYPES DESCRIPTION
SEE SHEET 9 FOR LOCKS AND HINGES DESCRIPTION

TABLE #2	ANCHORS LOAD CAPACITY – PSF SINGLE DOORS WITHOUT TRANSOM (X) OR WITH TRANSOM (O/X)											
DOOR DIMS.		1/4" SHIM SPACE						1/2" SHIM SPACE				
		ANCHOR TYPE 'A'	ANCHOR TYPE 'AA'	ANCHOR TYPE 'B'	ANCHOR TYPE 'BB'	ANCHOR TYPE 'C'	ANCHOR TYPE 'D'	ANCHOR TYPE 'A'	ANCHOR TYPE 'AA'	ANCHOR TYPE 'B'	ANCHOR TYPE 'BB'	ANCHOR TYPE 'C'
FRAME WIDTH	FRAME HEIGHT	EXT. (+) INT. (–)	EXT. (+) INT. (–)	EXT. (+) INT. (–)	EXT. (+) INT. (–)	EXT. (+) INT. (–)	EXT. (+) INT. (–)	EXT. (+) INT. (–)	EXT. (+) INT. (–)	EXT. (+) INT. (–)	EXT. (+) INT. (–)	EXT. (+) INT. (–)
40"	110-1/2"	104.0	120.0	120.0	120.0	120.0	120.0	88.0	88.0	120.0	120.0	120.0
47"	110-1/2"	89.0	89.0	108.0	108.0	120.0	120.0	75.0	75.0	108.0	108.0	120.0

SEE SHEET 3 FOR ANCHOR DESCRIPTION

SINGLE DOORS WITH OR WITHOUT TRANSOMS
USE CHARTS AS FOLLOWS
FOR THE CORRESPONDING DOOR SIZE
1- FOR GLASS TYPE, LOCK AND HINGE OPTIONS OBTAIN LOAD CAPACITIES FROM TABLE 1.
2- FOR ANCHORS TYPE/SHIMSPACE OBTAIN LOAD CAPACITIES FROM TABLE 2.
3- TRANSOMS FOR SINGLE DOORS ARE LIMITED TO ±90.0 PSF
THE LOWEST VALUES FROM STEPS 1, 2 AND 3 WILL GOVERN.

Engr: JAVAD AHMAD
CIVIL
FL. REG. # 70592
C.A.N. 3538
LICENSED
NO. 70592
STATE OF FLORIDA
APR 02 2012

PRODUCT REVISED
as complying with the Florida
Building Code 12-0314.14
Acceptance No
Expiration Date 10/30/2013
By
Miami Dade Product Control

AL-FAROOQ CORPORATION
ENGINEERS & PRODUCT DEVELOPMENT
1235 S.W. 87 AVE
MIAMI, FLORIDA 33174
TEL. (305) 264-8100 FAX. (305) 262-6978
COMP-ANL\W08-91SW

SERIES-9000 ALUM OUTSWING FRENCH DOOR (L.M.I.)

SUNSHINE WINDOWS MANUFACTURING INC.
1745 WEST 33RD PLACE
HIALEAH, FL. 33012
TEL. (305) 364-9952 FAX. (305) 828-5118

revisions:

no	date	by	description
A	03.29.12		UPDATED TO 2010 FBC

date: 11-11-08
scale: 1/2"=1'-0"
dr. by: HAMID
chk. by:

drawing no.
W08-91

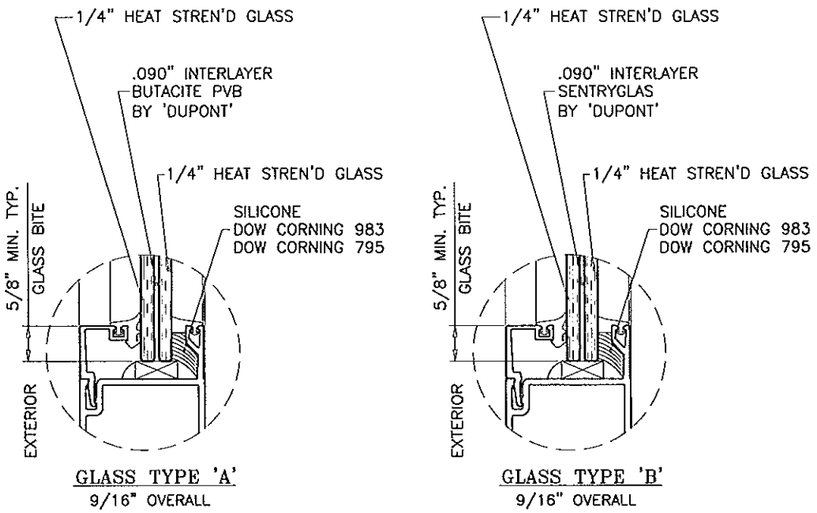

GLAZING OPTIONS

DOUBLE DOORS WITH OR WITHOUT TRANSOMS
USE CHARTS AS FOLLOWS
FOR THE CORRESPONDING DOOR SIZE

1- FOR GLASS TYPE, LOCK AND HINGE OPTIONS OBTAIN LOAD CAPACITIES FROM TABLE 3.
2- FOR JAMB ANCHORS, TYPE/SHIMSPACE OBTAIN LOAD CAPACITIES FROM TABLE 4.
3- FOR HEAD ANCHORS, TYPE/SHIMSPACE OBTAIN LOAD CAPACITIES FROM TABLE 5.
THE LOWEST VALUES FROM STEPS 1, 2 AND 3 WILL GOVERN.

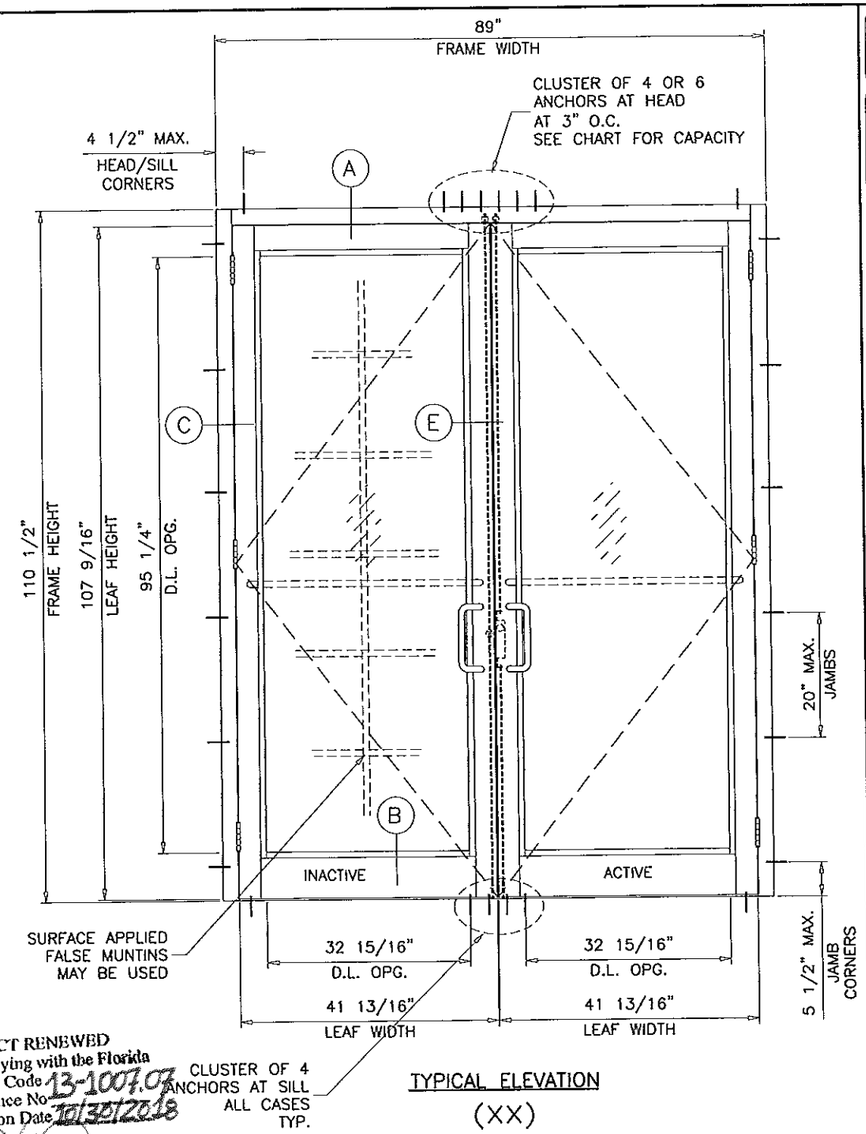

TYPICAL ELEVATION

(XX)

SEE SHEET 3 FOR ELEVATION (0/XX)

TABLE #3	DOORS LOAD CAPACITY - PSF DOUBLE DOOR WITHOUT TRANSOM (XX) OR WITH TRANSOM (0/XX)							
		GLASS		LOCKS			HINGES	
DOOR DIMS.		TYPE 'A'	TYPE 'B'	OPTION #1	OPTION #2	OPTION #3	OPTION #1	OPTION #2
FRAME WIDTH	FRAME HEIGHT	EXT. (+) INT. (-)	EXT. (+) INT. (-)	EXT. (+) INT. (-)	EXT. (+) INT. (-)	EXT. (+) INT. (-)	EXT. (+) INT. (-)	EXT. (+) INT. (-)
89"	98-1/2"	80.0	90.0	80.0	90.0	90.0	80.0	90.0
89"	110-1/2"	80.0	80.0	80.0	80.0	80.0	80.0	90.0

SEE SHEET 8 FOR LOCKS AND HINGES DESCRIPTION

TABLE #4	JAMB ANCHORS LOAD CAPACITY - PSF DOUBLE DOOR WITHOUT TRANSOM (XX) OR WITH TRANSOM (0/XX)											
		1/4" SHIM SPACE						1/2" SHIM SPACE				
DOOR DIMS.		ANCHOR TYPE 'A'	ANCHOR TYPE 'AA'	ANCHOR TYPE 'B'	ANCHOR TYPE 'BB'	ANCHOR TYPE 'C'	ANCHOR TYPE 'D'	ANCHOR TYPE 'A'	ANCHOR TYPE 'AA'	ANCHOR TYPE 'B'	ANCHOR TYPE 'BB'	ANCHOR TYPE 'C'
FRAME WIDTH	FRAME HEIGHT	EXT. (+) INT. (-)	EXT. (+) INT. (-)	EXT. (+) INT. (-)	EXT. (+) INT. (-)	EXT. (+) INT. (-)	EXT. (+) INT. (-)	EXT. (+) INT. (-)	EXT. (+) INT. (-)	EXT. (+) INT. (-)	EXT. (+) INT. (-)	EXT. (+) INT. (-)
75"	110-1/2"	90.0	90.0	90.0	90.0	90.0	90.0	90.0	90.0	90.0	90.0	90.0
89"	110-1/2"	90.0	90.0	90.0	90.0	90.0	90.0	79.0	79.0	90.0	90.0	90.0

SEE SHEET 3 FOR ANCHOR DESCRIPTION

PRODUCT RENEWED
as complying with the Florida
Building Code 13-1007.07
Acceptance No
Expiration Date 10/30/2018
By
Miami Dade Product Control

TABLE #5	HEAD ANCHORS LOAD CAPACITY - PSF DOUBLE DOOR WITHOUT TRANSOM (XX) OR WITH TRANSOM (0/XX)														
		1/4" SHIM SPACE							1/2" SHIM SPACE						
		ANCHOR TYPE 'A'		ANCHOR TYPE 'AA'	ANCHOR TYPE 'B'	ANCHOR TYPE 'BB'	ANCHOR TYPE 'C'	ANCHOR TYPE 'D'	ANCHOR TYPE 'A'		ANCHOR TYPE 'AA'		ANCHOR TYPE 'B'		ANCHOR TYPE 'BB'	ANCHOR TYPE 'C'
DOOR DIMS.		CLUSTER OF 4	CLUSTER OF 6	CLUSTER OF 4	CLUSTER OF 4	CLUSTER OF 4	CLUSTER OF 4	CLUSTER OF 4	CLUSTER OF 4	CLUSTER OF 6	CLUSTER OF 4	CLUSTER OF 6	CLUSTER OF 4	CLUSTER OF 6	CLUSTER OF 4	CLUSTER OF 4
FRAME WIDTH	FRAME HEIGHT	EXT. (+) INT. (-)	EXT. (+) INT. (-)	EXT. (+) INT. (-)	EXT. (+) INT. (-)	EXT. (+) INT. (-)	EXT. (+) INT. (-)	EXT. (+) INT. (-)	EXT. (+) INT. (-)	EXT. (+) INT. (-)	EXT. (+) INT. (-)	EXT. (+) INT. (-)	EXT. (+) INT. (-)	EXT. (+) INT. (-)	EXT. (+) INT. (-)	EXT. (+) INT. (-)
75"	98-1/2"	90.0	--	90.0	90.0	90.0	90.0	90.0	76.0	90.0	76.0	90.0	90.0	-	90.0	90.0
89"	98-1/2"	76.0	90.0	90.0	90.0	90.0	90.0	90.0	64.0	90.0	64.0	90.0	90.0	-	90.0	90.0
75"	110-1/2"	80.0	90.0	90.0	90.0	90.0	90.0	90.0	67.0	90.0	67.0	90.0	90.0	-	90.0	90.0
89"	110-1/2"	68.0	90.0	90.0	90.0	90.0	90.0	90.0	57.0	86.0	57.0	86.0	82.0	90.0	90.0	90.0

SEE SHEET 3 FOR ANCHOR DESCRIPTION

NOTE:
GLASS CAPACITIES ON THIS SHEET ARE BASED ON ASTM E1300-04 (3 SEC. GUSTS) AND FLORIDA BUILDING COMMISSION DECLARATORY STATEMENT DCA05-DEC-219

Engr: JAVAD AHMAD
CIVIL
FLA. PE # 70592
C.A.N. 3538
STATE OF FLORIDA
APR 02 2012

PRODUCT REVISED
as complying with the Florida
Building Code 12-0314.14
Acceptance No
Expiration Date 10/30/2013
By
Miami Dade Product Control

AL-FAROOQ CORPORATION
ENGINEERS & PRODUCT DEVELOPMENT
1235 S.W. 87 AVE
MIAMI, FLORIDA 33174
TEL. (305) 264-8100 FAX. (305) 262-6978
COMP-ANL\W08-91SW

SERIES-9000 ALUM OUTSWING FRENCH DOOR (L.M.I.)

SUNSHINE WINDOWS MANUFACTURING INC.
1745 WEST 33RD PLACE
HIALEAH, FL. 33012
TEL. (305) 364-9952 FAX. (305) 828-5118

revisions:			
no	date	by	description
A	03.29.12		SILICONE REV.

date: 11-11-08
scale: 1/2"=1'-0"
dr. by: HAMID
chk. by:

drawing no.
W08-91

TYPICAL ANCHORS: SEE ELEV. FOR SPACING

TYPE 'A'

1/4" DIA ULTRACON BY 'ELCO' (Fu=177 KSI, Fy=155 KSI)

A: INTO 2BY WOOD BUCKS OR WOOD STRUCTURES
WITH 1-3/8" MIN. PENETRATION INTO WOOD

THRU 1BY WOOD BUCKS INTO CONCRETE
WITH 1-1/4" MIN. EMBED INTO CONCRETE

DIRECTLY INTO C90 FILLED BLOCK
WITH 1-1/4" MIN. EMBED INTO MASONRY

AA: DIRECTLY INTO CONCRETE
WITH 1-3/8" MIN. EMBED INTO CONC.

ANCHOR EDGE DISTANCES

INTO CONCRETE AND MASONRY = 2-1/2" MIN.
INTO WOOD STRUCTURE = 1" MIN.

TYPE 'B'

1/4" DIA HILTI KWIK CON III BY 'HILTI' (Fu=163 KSI, Fy=157 KSI)

B: INTO 2BY WOOD BUCKS OR WOOD STRUCTURES
WITH 1-3/8" MIN. PENETRATION INTO WOOD

THRU 1BY WOOD BUCKS INTO CONCRETE
WITH 1-1/4" MIN. EMBED INTO CONCRETE

DIRECTLY INTO C90 FILLED BLOCK
WITH 1-1/2" MIN. EMBED INTO MASONRY

BB: DIRECTLY INTO CONCRETE
WITH 1-3/8" MIN. EMBED INTO CONC.

ANCHOR EDGE DISTANCES

INTO CONCRETE AND MASONRY = 2-1/2" MIN.
INTO WOOD STRUCTURE = 1" MIN.

TYPE 'C'

5/16" DIA ULTRACON BY 'ELCO' (Fu=177 KSI, Fy=155 KSI)

C: DIRECTLY INTO CONCRETE
WITH 1-3/8" MIN. EMBED INTO CONC.

ANCHOR EDGE DISTANCES

INTO CONCRETE AND MASONRY = 2-1/2" MIN.
INTO WOOD STRUCTURE = 1" MIN.

TYPE 'D'

#14 SMS OR SELF DRILLING SCREWS (Fu=92 KSI, Fy=120 KSI)

D: INTO METAL STRUCTURES

STEEL : 12 GA. MIN. (Fy = 36 KSI MIN.)
ALUMINUM : 1/8" THK. MIN. (6063-T5 MIN.)
(STEEL IN CONTACT WITH ALUMINUM TO BE PLATED OR PAINTED)

ANCHOR EDGE DISTANCES

INTO METAL STRUCTURE = 1/2" MIN.

CONCRETE f'c = 3000 PSI MIN.
MASONRY f'm = 1500 PSI MIN.

WOOD BUCKS AND METAL STRUCTURES NOT BY SUNSHINE WDW. MUST SUPPORT LOADS IMPOSED BY GLAZING SYSTEM AND TRANSFER THEM TO THE BUILDING STRUCTURE.

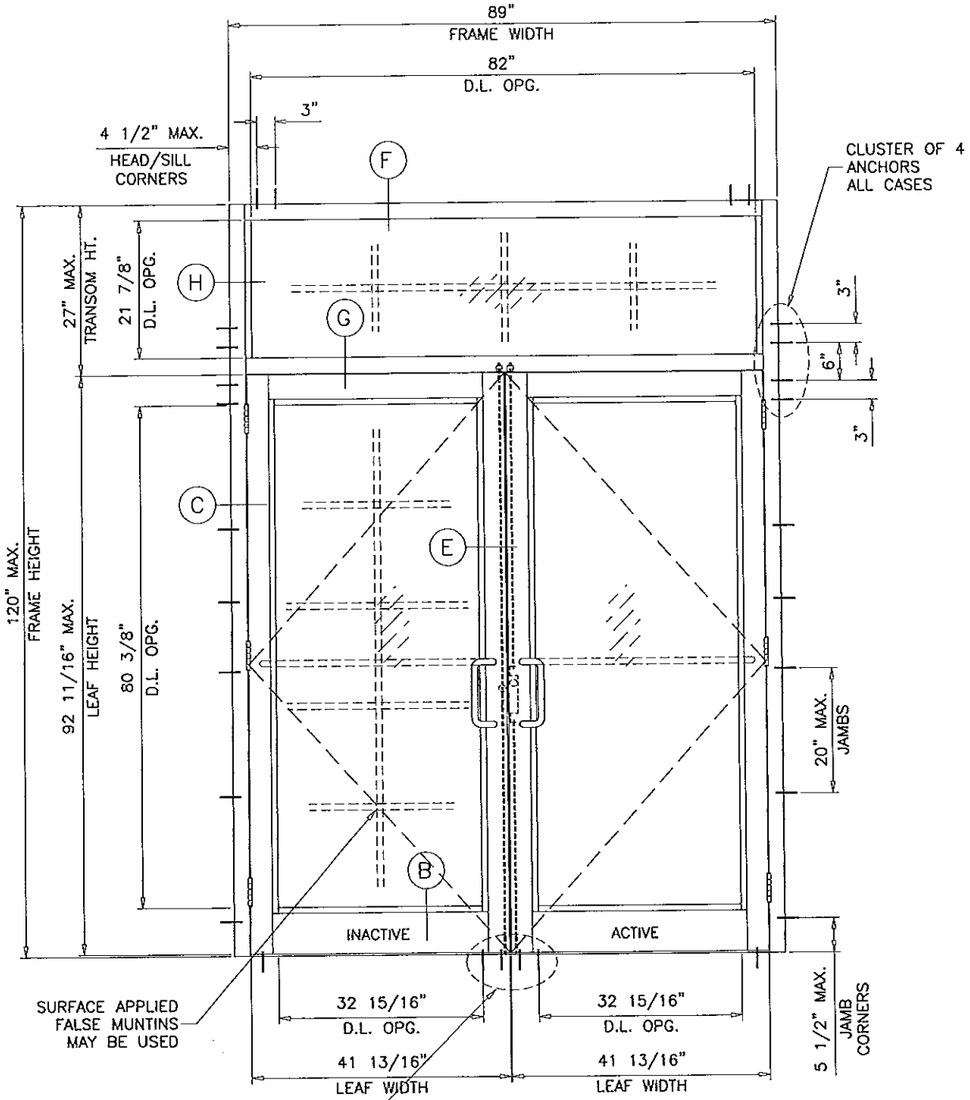

TYPICAL ELEVATION
(O/XX)

SEE CHARTS ON SHEET 2 FOR DOOR AND TRANSOM LOAD CAPACITY

PRODUCT RENEWED
as complying with the Florida Building Code
Acceptance No 13-1007.07
Expiration Date 10/30/2018
By
Miami Dade Product Control

Engr: JAVAD AHMAD
CIVIL
FLA. PE # 70592
CA # 3538
LICENSED
STATE OF FLORIDA
APR 02 2012

PRODUCT REVISED
as complying with the Florida Building Code
Acceptance No 12-0314.14
Expiration Date 10/30/2013
By
Miami Dade Product Control

AL-FAROOQ CORPORATION
ENGINEERS & PRODUCT DEVELOPMENT
1235 S.W. 87 AVE
MIAMI, FLORIDA 33174
TEL. (305) 264-8100 FAX. (305) 262-6978
COMP-ANL\W08-91SW

SERIES-9000 ALUM OUTSWING FRENCH DOOR (L.M.I.)

SUNSHINE WINDOWS MANUFACTURING INC.
1745 WEST 33RD PLACE
HIALEAH, FL. 33012
TEL. (305) 364-9952 FAX. (305) 828-5118

revisions:

no	date	by	description
A	03.29.12		NO CHANGE THIS SHEET

date: 11-11-08
scale: 1/2"=1'-0"
dr. by: HAMID
chk. by:

drawing no. W08-91

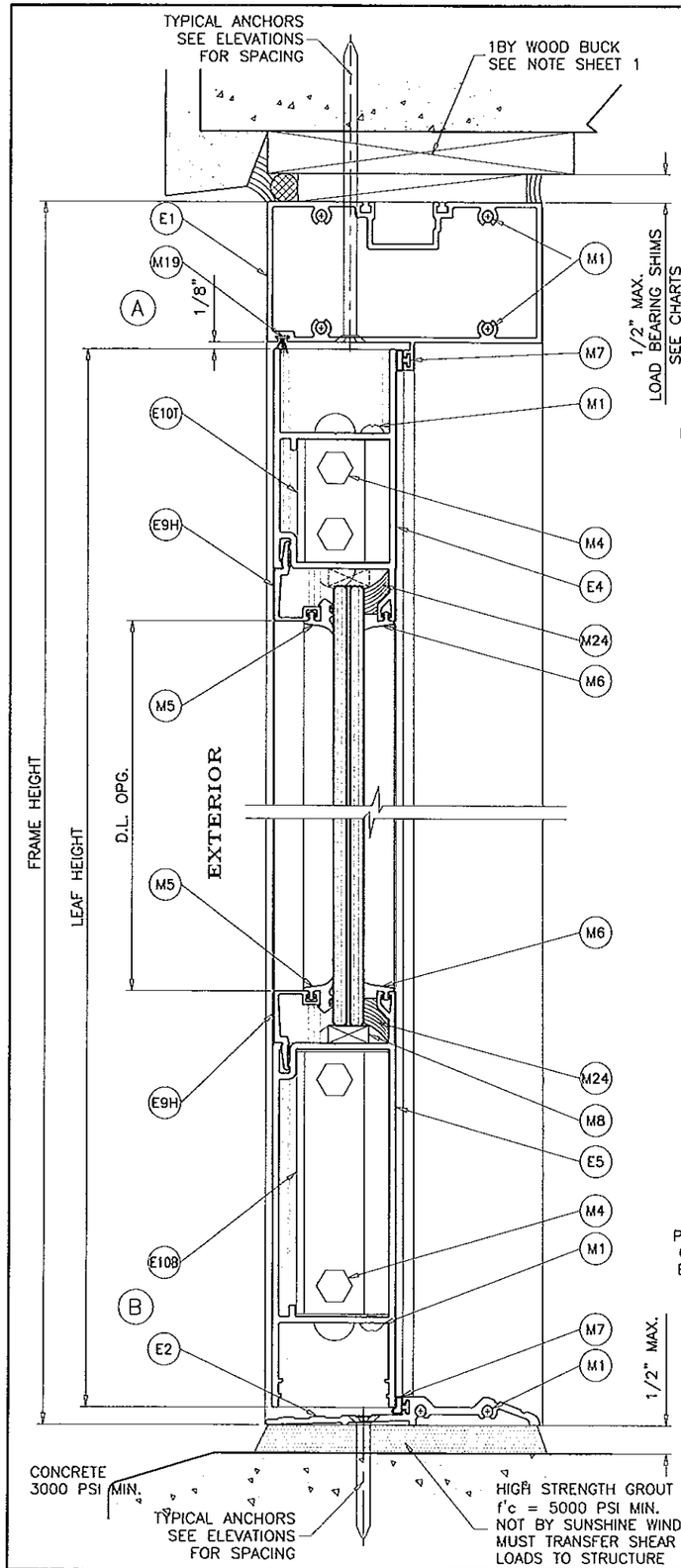

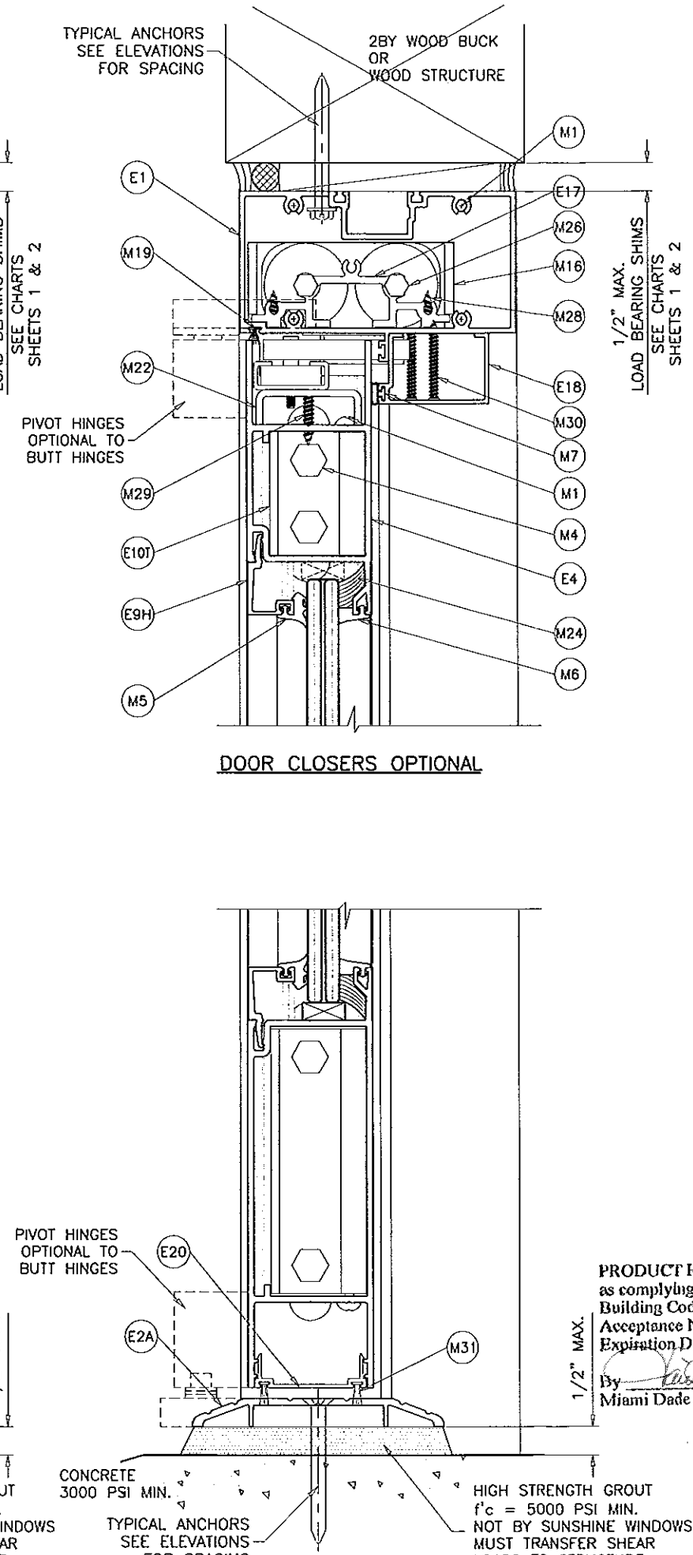

DOOR CLOSERS OPTIONAL

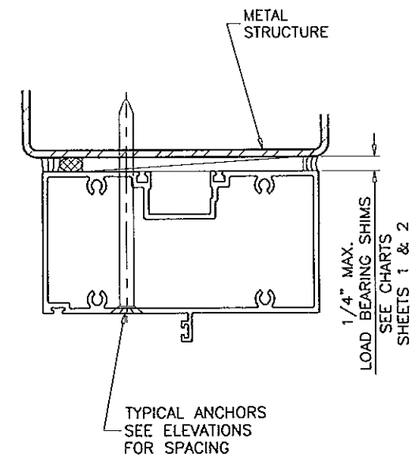

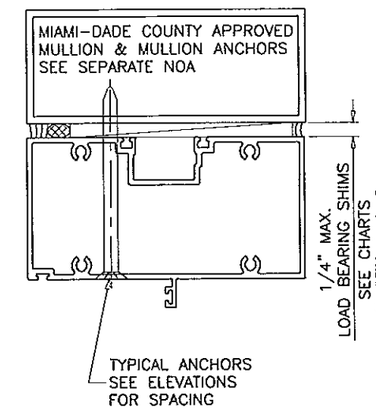

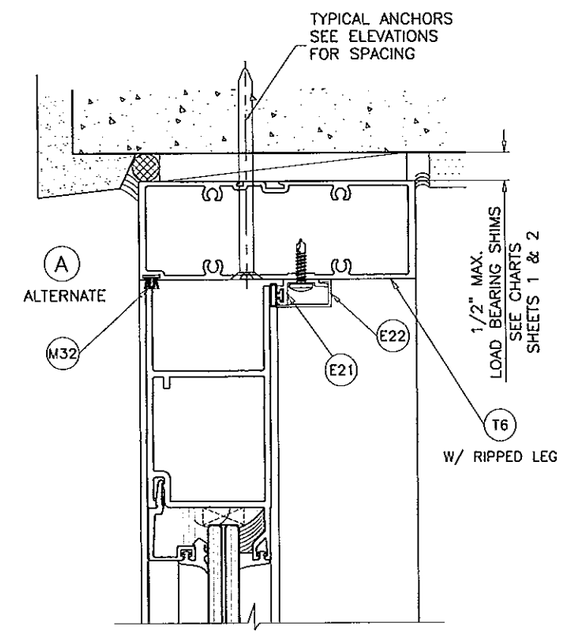

DOOR HEAD
SERIES-8000 FRAME OPTION

DOORS SHOWN WITH SERIES-9500 FRAMES CAN ALSO BE USED WITH SERIES-8000 FRAMES.

PRODUCT RENEWED
as complying with the Florida Building Code
Acceptance No 13-1007.07
Expiration Date 10/30/2018
By
Miami Dade Product Control

Engr: JAVAD AHMAD
CIVIL
FLA. PE. # 70592
C.A.N. 3538
STATE OF FLORIDA
PROFESSIONAL ENGINEER
APR 02 2012

PRODUCT REVISED
as complying with the Florida Building Code
Acceptance No 12-0314.14
Expiration Date 10/30/2013
By
Miami Dade Product Control

AL-FAROOQ CORPORATION
ENGINEERS & PRODUCT DEVELOPMENT
1235 S.W. 87 AVE
MIAMI, FLORIDA 33174
TEL (305) 264-8100 FAX. (305) 262-6978
COMP-ANL\W08-91SW

SERIES-9000 ALUM OUTSWING FRENCH DOOR (L.M.I.)

SUNSHINE WINDOWS MANUFACTURING INC.
1745 WEST 33RD PLACE
HIALEAH, FL. 33012
TEL. (305) 364-9952 FAX. (305) 828-5118

revisions:

no	date	by	description
A	03.29.12		NO CHANGE THIS SHEET

date: 11-11-08
scale: 3/8" = 1"
dr. by: HAMID
chk. by:

drawing no.
W08-91

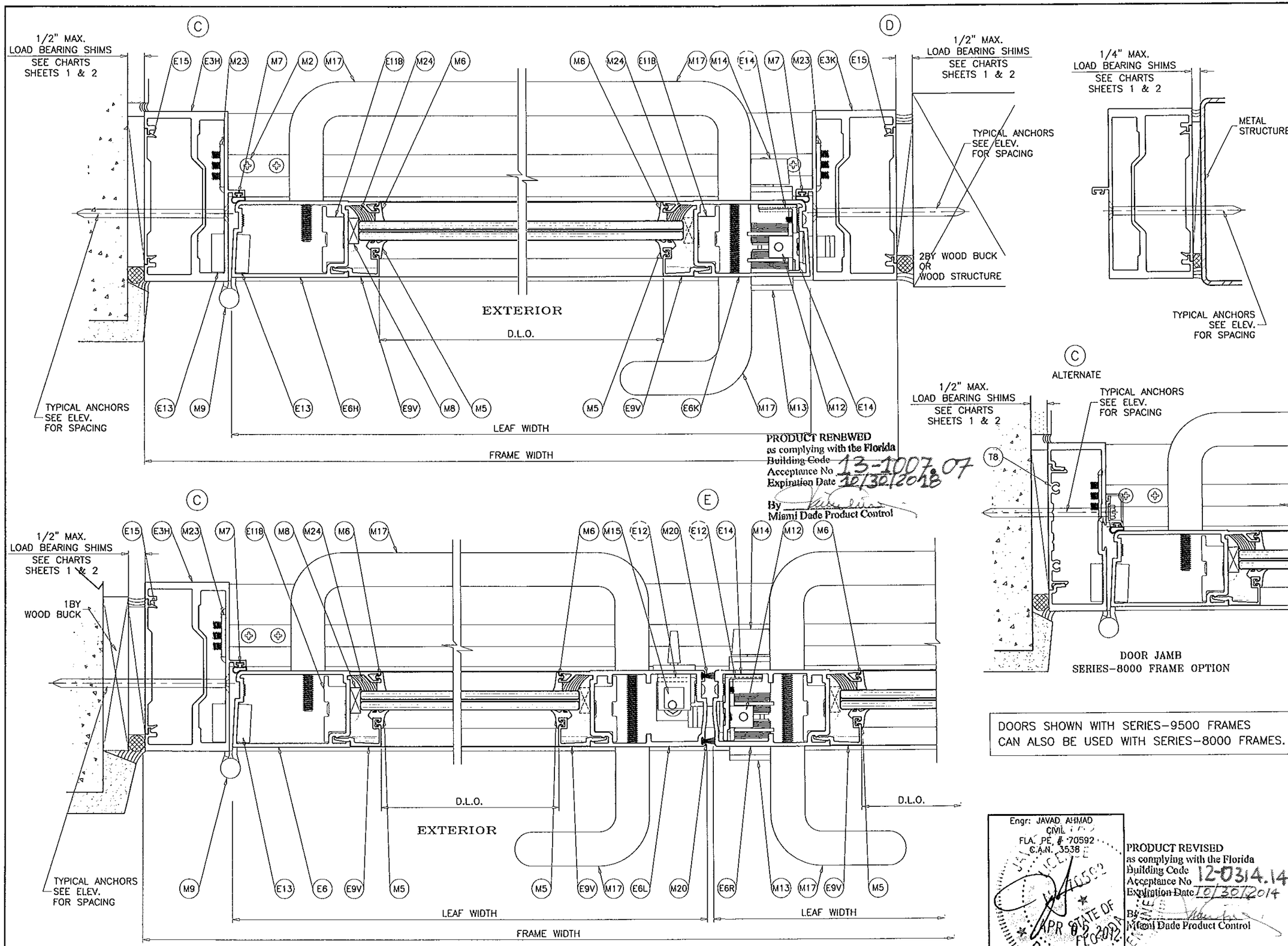

PRODUCT RENEWED
as complying with the Florida
Building Code
Acceptance No 13-1007.07
Expiration Date 10/30/2018
By
Miami Dade Product Control

DOORS SHOWN WITH SERIES-9500 FRAMES
CAN ALSO BE USED WITH SERIES-8000 FRAMES.

Engr: JAVAD AHMAD
CIVIL
FLA. PE. # 70592
C.A.N. 3538
APR 05 2012
STATE OF FLORIDA
PROFESSIONAL ENGINEER

PRODUCT REVISED
as complying with the Florida
Building Code
Acceptance No 12-0314.14
Expiration Date 10/30/2014
By
Miami Dade Product Control

AL-FAROOQ CORPORATION
ENGINEERS & PRODUCT DEVELOPMENT
1235 S.W. 87 AVE
MIAMI, FLORIDA 33174
TEL. (305) 264-8100 FAX. (305) 262-6978
COMP-ANL\W08-91SW

SERIES-9000 ALUM OUTSWING FRENCH DOOR (L.M.I.)

SUNSHINE WINDOWS MANUFACTURING INC.
1745 WEST 33RD PLACE
HIALEAH, FL. 33012
TEL. (305) 364-9952 FAX. (305) 828-5118

revisions:

no	date	by	description
A	03.29.12		NO CHANGE THIS SHEET

date: 11-11-08
scale: 3/8" = 1"
dr. by: HAMID
chk. by:

drawing no.
W08-91

sheet 5 of 10

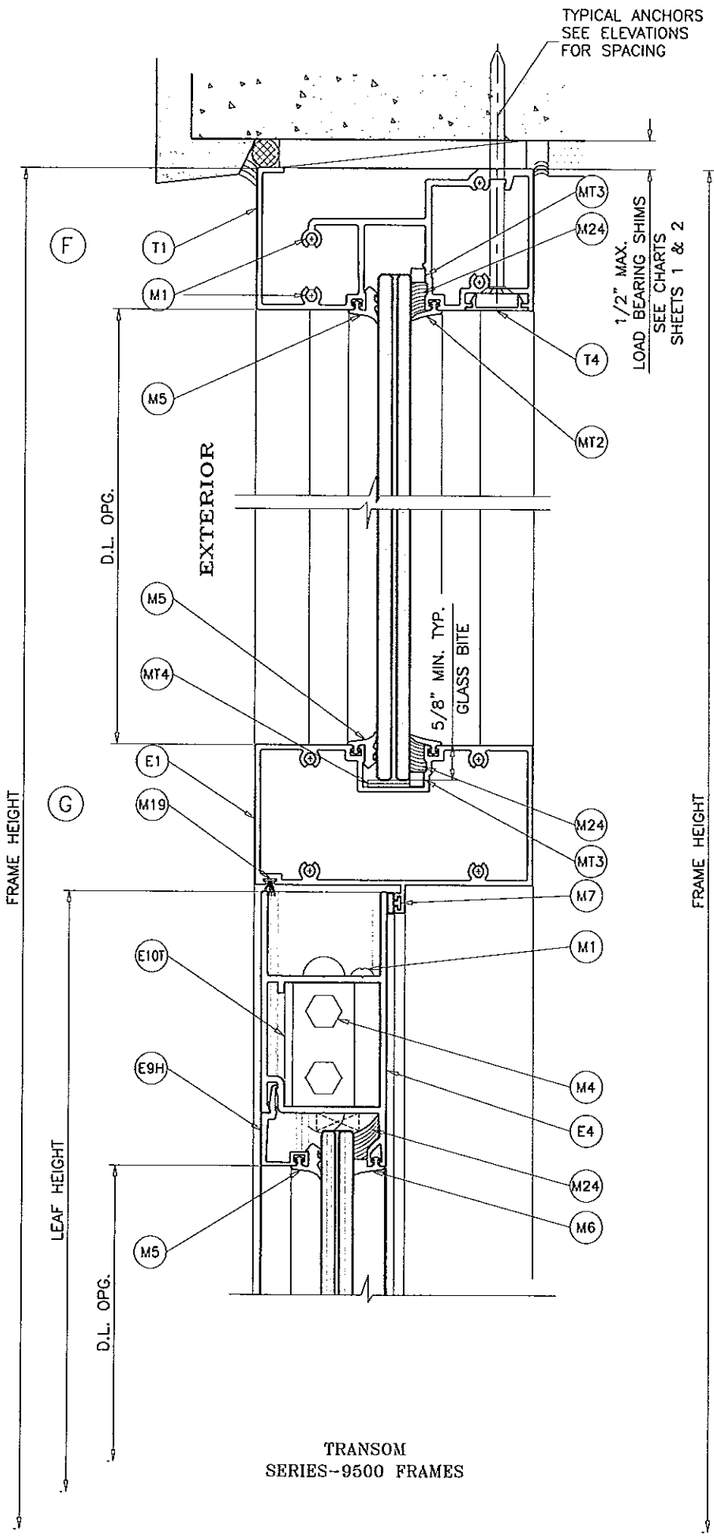

TRANSOM
SERIES-9500 FRAMES

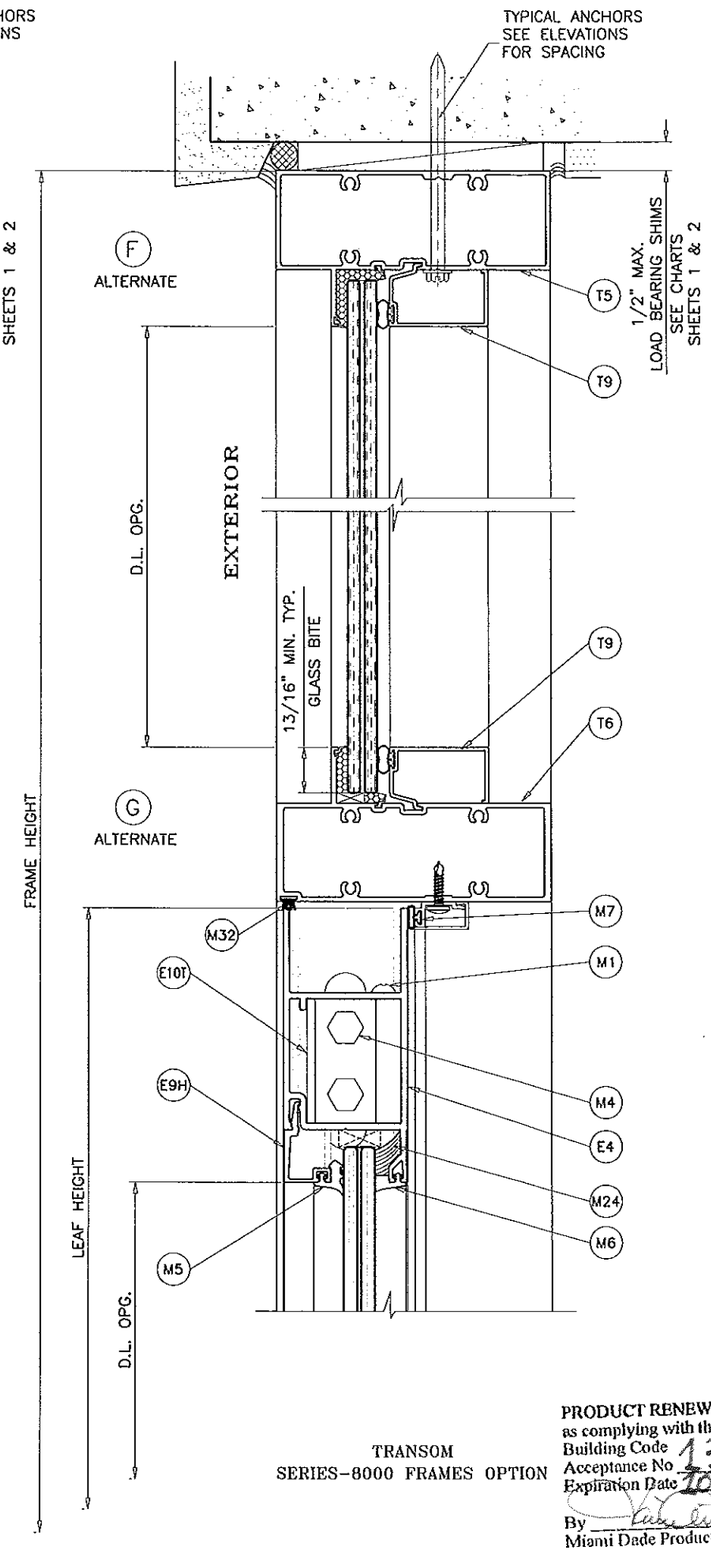

TRANSOM
SERIES-8000 FRAMES OPTION

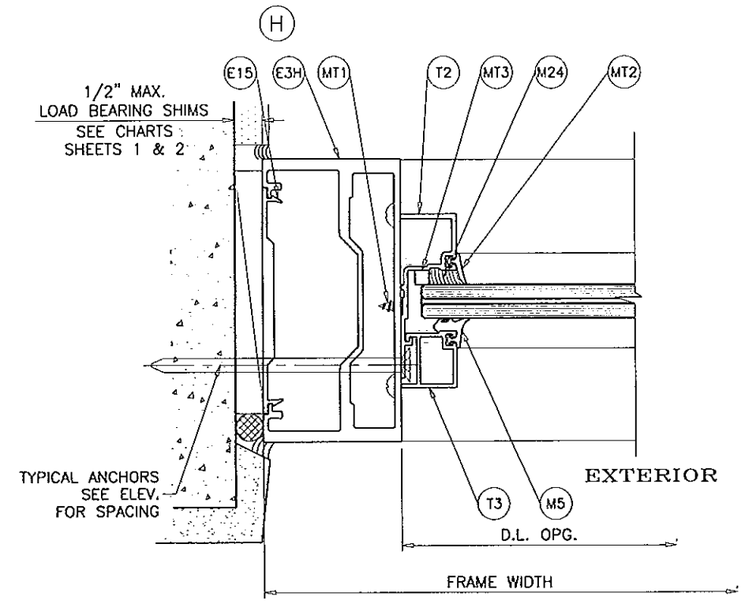

TRANSOM
SERIES-9500 FRAMES

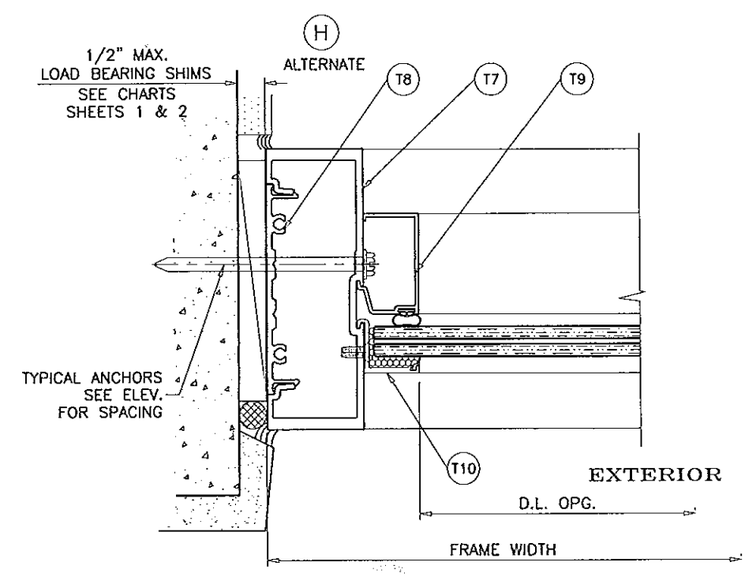

TRANSOM JAMB
SERIES-8000 FRAMES OPTION

PRODUCT RENEWED
as complying with the Florida
Building Code
Acceptance No 13-1007.07
Expiration Date 10/30/2016
By
Miami Dade Product Control

Engr: JAVAD AHMAD
CIVIL
FLA. PE # 70592
G.A.N. 3538
STATE OF FLORIDA
APR 02 2012

PRODUCT REVISED
as complying with the Florida
Building Code
Acceptance No 12-0314.14
Expiration Date 10/30/2013
By
Miami Dade Product Control

AL-FAROOQ CORPORATION
ENGINEERS & PRODUCT DEVELOPMENT
1235 S.W. 87 AVE
MIAMI, FLORIDA 33174
TEL. (305) 264-8100 FAX. (305) 262-6978
COMP-ANL\W08-91SW

SERIES-9000 ALUM OUTSWING FRENCH DOOR (L.M.I.)

SUNSHINE WINDOWS MANUFACTURING INC.
1745 WEST 33RD PLACE
HIALEAH, FL. 33012
TEL. (305) 364-9952 FAX. (305) 828-5118

revisions:

no	date	by	description
A	03.29.12		NO CHANGE THIS SHEET

date: 11-11-08
scale: 3/8" = 1"
dr. by: HAMID
chk. by:

drawing no.
W08-91

sheet 6 of 10

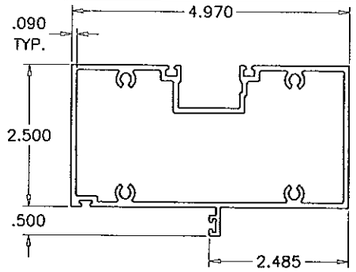

E1 DOOR HEADER

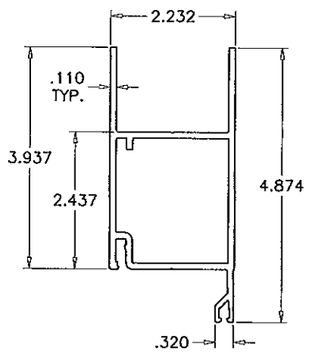

E4 TOP RAIL

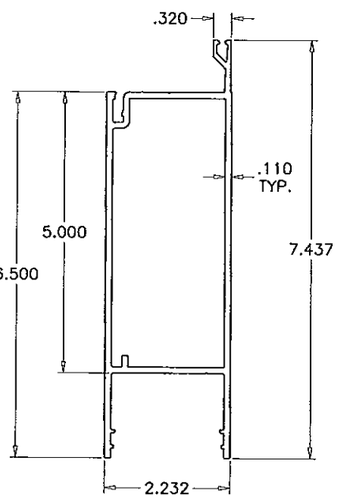

E5 BOTTOM RAIL

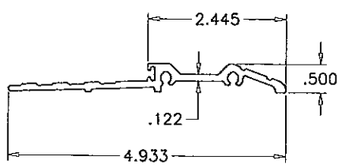

E2 THRESHOLD

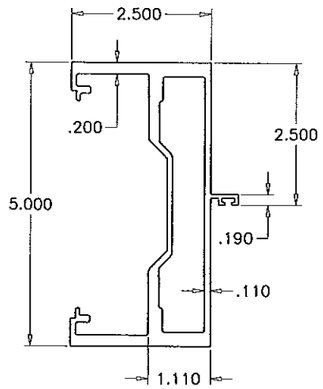

E3 DOOR JAMB

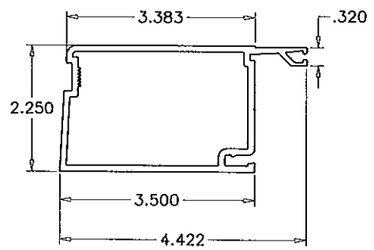

E6 HINGE/LOCK STILE

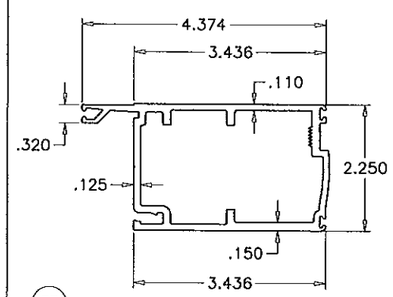

E7 MEETING STILE – INACTIVE LEAF

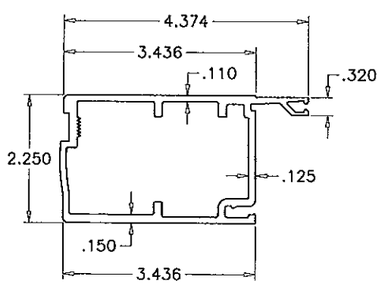

E8 MEETING STILE – ACTIVE LEAF

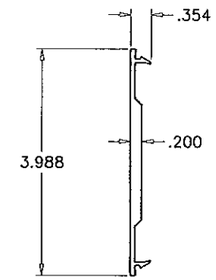

E15 JAMB FILLER

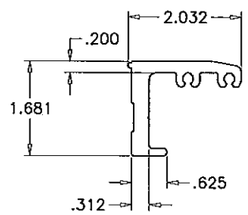

E10 CORNER BLOCK

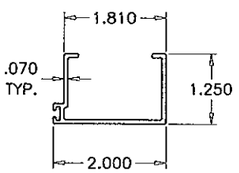

E18 CLOSURE DOOR STOP

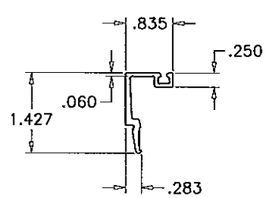

E9 GLASS STOP

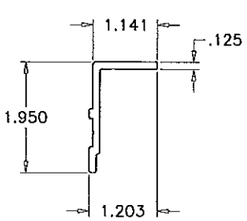

E14 LOCK BACK UP PLATE

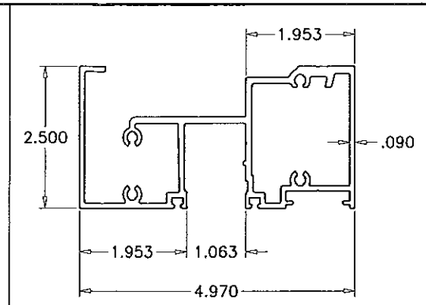

T1 TRANSOM HEADER

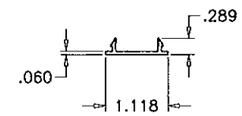

T4 HEAD COVER

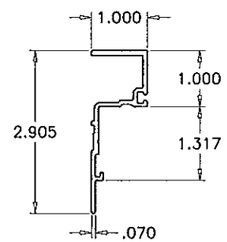

T2 TRANSOM ADAPTER

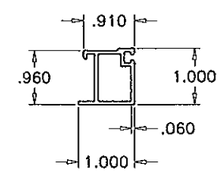

T3 TRANSOM GLASS STOP

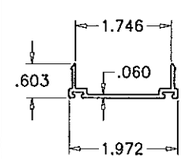

E20 DOOR SWEEP

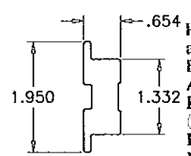

E11 CORNER PLATE

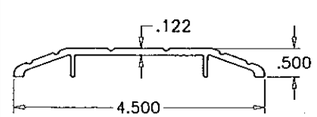

E2A ALTERNATE THRESHOLD

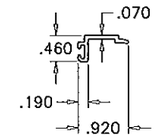

E21 DOOR STOP

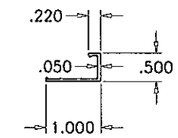

E22 DOOR STOP COVER

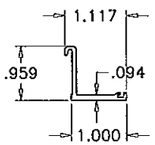

T10 TRANSOM GLAZING ADAPTER

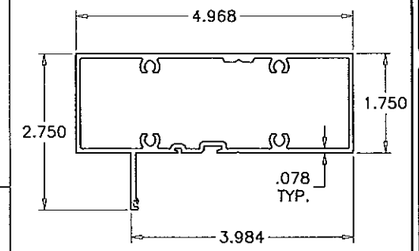

T5 TRANSOM HEAD S-8000

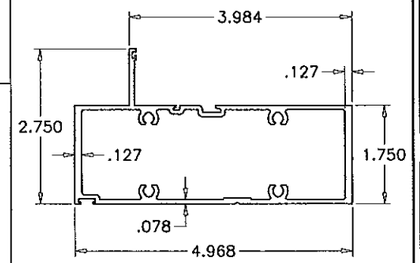

T6 HORIZONTAL AT DOOR S-8000

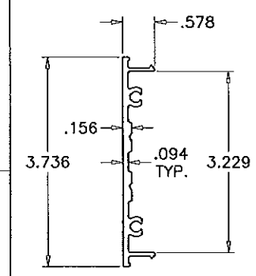

T8 JAMB FILLER S-8000

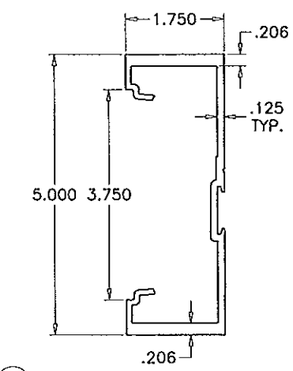

T7 TRANSOM JAMB S-8000

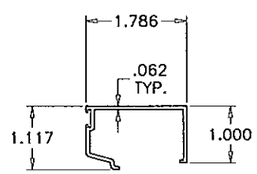

T9 TRANSOM GLASS STOP S-8000

PRODUCT RENEWED
as complying with the Florida
Building Code
Acceptance No 13-100707
Expiration Date 10/30/2018
By
Miami Dade Product Control

Engr: JAVAD AHMAD
CIVIL
FLA. PE # 70592
C.A.N. 3538

JAVAD AHMAD LICENSE No. 70592 STATE OF FLORIDA PROFESSIONAL ENGINEER

APR 02 2012

PRODUCT REVISED
as complying with the Florida
Building Code
Acceptance No 12-0314.14
Expiration Date 10/30/2013
By
Miami Dade Product Control

AL-FAROOQ CORPORATION
ENGINEERS & PRODUCT DEVELOPMENT
1235 S.W. 87 AVE
MIAMI, FLORIDA 33174
TEL. (305) 264-8100 FAX. (305) 262-6978
COMP-ANL\W08-91SW

SERIES-9000 ALUM OUTSWING FRENCH DOOR (L.M.I.)

SUNSHINE WINDOWS MANUFACTURING INC.
1745 WEST 33RD PLACE
HIALEAH, FL. 33012
TEL. (305) 364-9952 FAX. (305) 828-5118

revisions:

no	date	by	description
A	03.29.12		NO CHANGE THIS SHEET

date: 11-11-08
scale: 3/8" = 1"
dr. by: HAMID
chk. by:

drawing no. W08-91

ITEM #	PART #	QUANTITY	DESCRIPTION	MATERIAL	MANF./SUPPLIER/REMARKS
E1	ES9012	1	DOOR HEADER	6063-T6	–
E2	ES9014	1	THRESHOLD	6063-T6	–
E2A	ES9015	1	ALTERNATE THRESHOLD	6063-T6	–
E3H	ES9013	2	DOOR JAMB – HINGE	6063-T6	–
E4	ES9001	2	TOP RAIL	6063-T5	–
E5	ES9002	2	BOTTOM RAIL	6063-T6	–
E6H	ES9003	2	HINGE/LOCK STILE	6063-T5	–
E7	ES9006	1	MEETING STILE – INACTIVE LEAF	6063-T5	–
E8	ES9007	1	MEETING STILE – ACTIVE LEAF	6063-T5	–
E9H	ES9004	4	HORIZONTAL GLASS STOP	6063-T5	–
E9V	ES9004	4	VERTICAL GLASS STOP	6063-T5	–
E10T	ES9008	4	CORNER BLOCK –TOP	6063-T5	–
E10B	ES9008	4	CORNER BLOCK – BOTTOM	6063-T5	–
E11T	ES9009	4	CORNER PLATE – TOP	6063-T5	–
E11B	ES9009	4	CORNER PLATE – BOTTOM	6063-T5	–
E12	ES9010	4	SUPPORT ANGLE	6063-T5	3/4" X 1" X 1/8" X 9" LONG
E13	ES9011	AS RQD.	HINGE BACKUP PLATE REINFORCEMENT	6063-T5	–
E14	ES9020	1	LOCK BACKUP PLATE REINFORCEMENT	6063-T5	–
E15	ES9016	AS RQD.	JAMB FILLER	6063-T5	–
E16	ES9017	AS RQD.	REINFORCEMENT	6063-T6	–
E17	ES9021	1/ CLOSER	CLOSER SUPPORT CLIPS (PAIR)	6063-T5	–
E18	ES9022	1	CLOSER DOOR STOP	6063-T5	–
E19	ES9023	1/ CLOSER	CLOSER COVER PLATE	6063-T5	–
E20	ES9005		DOOR SWEEP	–	–
E21	ES9051		DOOR STOP	–	–
E22	ES9052		DOOR STOP COVER	–	–
M1		28	#12 x 1" P.H. ST/ST SMS	–	–
M2		AS RQD.	#12 – 24 x 1/2" F.H. ST/ST MS	–	–
M3		18	#8 – 32 x 1/2" P.H. ST/ST MS	–	–
M4		16	3/8" – 16 x 1" HEX. BOLT	–	–
M5		AS RQD.	WEDGE GASKET	–	–
M6		AS RQD.	SPACER GASKET	–	–
M7		AS RQD.	BULB VINYL	–	–
M8		8	SETTING BLOCK	–	–
M9		AS RQD.	HINGE 4 1/2" x 4"	–	–
M12		1	3 POINT LOCK	–	–
M13		1	KEY CYLINDER	–	–
M14		1	THUMBTURN	–	–
M15		1	2 POINT LOCK	–	–
M16		1/ LEAF	DOOR CLOSURE	–	–
M17		2	PUSH – PULL	–	–
M19	W13273NK	AS RQD.	PILE – HEADER	–	–
M20	W23451NK	AS RQD.	PILE – MTG STILES	–	–
M22	–	1/ CLOSER	CHANNEL SPACER 5/8" X 1-3/4"	–	–
M23		2	THRESHOLD CLIP	–	–
M24		AS RQD.	STRUCTURAL SILICONE	–	–
M25		AS RQD.	SILICONE	–	–
M26		2/ CLOSER	1/4 – 20 x 2" HEX. BOLT	–	–
M27		3/ CLOSER	#10 x 1" P.H. ST/ST SMS	–	–
M28		6/ CLOSER	#10 x 3/4" F.H. ST/ST SMS	–	–
M29		3/ CLOSER	#10 x 1" F.H. ST/ST SMS	–	–
M30		AS RQD.	#8 x 1 1/2" F.H. ST/ST SMS	–	–
M31	W13351NK	AS RQD.	PILE – DOOR SWEEP	–	–
M32	W13275NK	AS RQD.	PILE – HEADER	–	–

ITEM #	PART #	QUANTITY	DESCRIPTION	MATERIAL	MANF./SUPPLIER/REMARKS
T1	ES9506		TRANSOM HEADER	6063-T6	–
T2	ES9019		TRANSOM ADAPTER	6063-T5	–
T3	ES9018		TRANSOM GLASS STOP	6063-T5	–
T4	ES9502		HEAD COVER	6063-T5	–
MT1			#10 x 1/2" F.H. ST/ST SMS	–	–
MT2			TRIM GASKET	–	–
MT3			INTERIOR SPACER 1/4" x 1/4"	–	–
MT4			SETTING BLOCKS 1/16" x 3/4"	–	–
T5	ES8005	AS REQD.	TRANSOM HEAD S-8000	6005-T5	–
T6	ES8013	AS REQD.	HORIZONTAL AT DOOR S-8000	6005-T5	–
T7	ES8012	AS REQD.	TRANSOM JAMB S-8000	6005-T5	–
T8	ES8003	AS REQD.	JAMB FILLER S-8000	6005-T5	–
T9	ES8006	AS REQD.	TRANSOM GLASS STOP S-8000	6063-T5	–
T10	ES8014	AS REQD.	TRANSOM GLAZING ADAPTER	6063-T6	–

PRODUCT RENEWED
as complying with the Florida
Building Code
Acceptance No 13-1007.07
Expiration Date 10/30/2018
By
Miami Dade Product Control

Engr: JAVAD AHMAD
CIVIL
FLA. PE # 70592
C.A.N. 3538
APR 02 2012

PRODUCT REVISED
as complying with the Florida
Building Code
Acceptance No 12-0314.14
Expiration Date 10/30/2013
By
Miami Dade Product Control

AL-FAROOQ CORPORATION
ENGINEERS & PRODUCT DEVELOPMENT
1235 S.W. 87 AVE
MIAMI, FLORIDA 33174
TEL. (305) 264-8100 FAX. (305) 262-6978
COMP-ANL\W08-91SW

SERIES-9000 ALUM OUTSWING FRENCH DOOR (L.M.I.)

SUNSHINE WINDOWS MANUFACTURING INC.
1745 WEST 33RD PLACE
HIALEAH, FL. 33012
TEL. (305) 364-9952 FAX. (305) 828-5118

revisions:

no	date	by	description
A	03.29.12		NO CHANGE THIS SHEET

date: 11-11-08
scale: 3/8" = 1"
dr. by: HAMID
chk. by:

drawing no.
W08-91

LOCKS:

OPTION #1:

CONCEALED VERTICAL ROD PANIC EXIT DEVICE BY
'JACKSON PANIC SYSTEM' #1285 LOCATED AT 41"
FROM SILL AT EACH LEAF.
FASTENED WITH
(1) #14 X 1" HH SELF DRILLING SCREW AT ONE END AND
(2) #12-24 X 1/2" OH MACHINE SCREWS AT OTHER END

OR

CONCEALED VERTICAL ROD PANIC EXIT DEVICE BY
'ADAMS RITE' LOCATED AT 40" FROM SILL
AT EACH LEAF.
FASTENED WITH
(2) #10-32 X 3/4" FH MACHINE SCREWS AT ONE END AND
(2) #10-24 X 1/2" FH MACHINE SCREWS AT OTHER END

OPTION #2:

CONCEALED VERTICAL ROD PANIC EXIT DEVICE BY
'JACKSON PANIC SYSTEM' #2086 LOCATED AT 41"
FROM SILL AT EACH LEAF.
FASTENED WITH
(1) #14 X 1" HH SELF DRILLING SCREW AT ONE END AND
(2) #12-24 X 1/2" OH MACHINE SCREWS AT OTHER END

OR

CONCEALED VERTICAL ROD PANIC EXIT DEVICE BY
'DOR-O-MATIC' LOCATED AT 40" FROM SILL
AT EACH LEAF.
FASTENED WITH
(2) #12-24 X 1/2" FH MACHINE SCREWS AT ONE END

OPTION #3:

ACTIVE LEAF:

KEY OPERATED THREE POINT LOCK SYSTEM BY
'ADAMS RITE' WITH CONCEALED FLUSH BOLTS AT TOP &
BOTTOM OF LOCK STILE AND A THUMB TURN ON THE
INTERIOR, LOCATED AT 40" FROM BOTTOM OF PANEL
FASTENED WITH
(2) #12-24 X 1/2" FH MACHINE SCREWS

INACTIVE LEAF:

MANUALLY OPERATED TWO POINT LOCK SYSTEM BY
'ADAMS RITE' WITH CONCEALED FLUSH BOLTS AT TOP &
BOTTOM OF LOCK STILE AND A THUMB TURN ON THE
INTERIOR, LOCATED AT 40" FROM BOTTOM OF PANEL
FASTENED WITH
(2) #8-32 X 1/4" PH MACHINE SCREWS

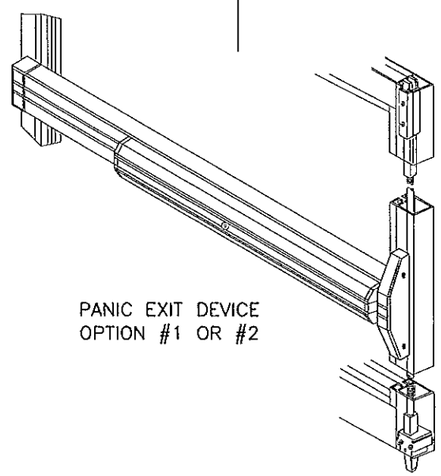

PANIC EXIT DEVICE
OPTION #1 OR #2

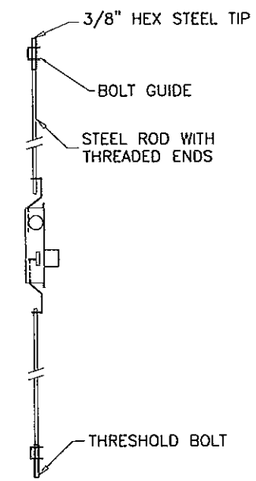

HINGES:

OPTION #1:

OFFSET PIVOT HINGES
ALUMINUM AT TOP AND BOTTOM
FASTENED TO FRAME AND THRESHOLD WITH
#10-24 X 1/2" FH THREAD CUTTING SCREWS
(2) AT THRESHOLD, (2) AT JAMB BOTTOM
(3) AT FRAME HEAD
HEAVY DUTY BRASS OR BRONZE AT MIDSPAN
FASTENED TO FRAME AND LEAF WITH
(4) 1/4-20 X 5/8" MS

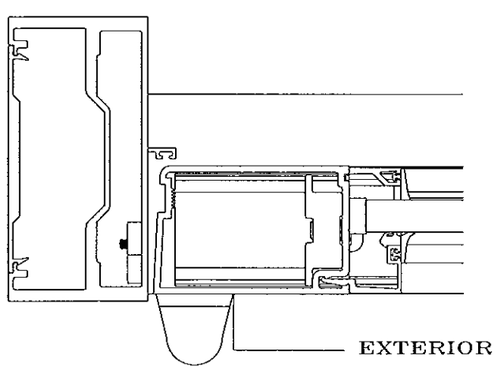

OPTION #2:

4 X 4-1/2" ST. STEEL BALL BEARING BUTT HINGES
LOCATED AT
11" FROM TOP & BOTTOM AND AT MIDSPAN
FASTENED TO DOOR FRAME AND LEAF STILE WITH
(4) #12-24 X 1/2" FH MACHINE SCREWS PER HASP

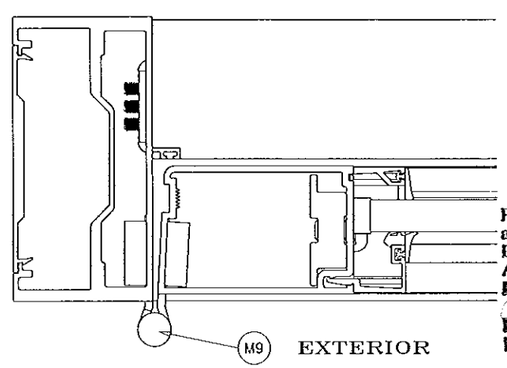

PRODUCT RENEWED
as complying with the Florida
Building Code
Acceptance No 13-1007.07
Expiration Date 10/30/2018
By
Miami Dade Product Control

Engr. JAVAD AHMAD
CIVIL
FLA. PE # 70592
C.A.N. 3538
LICENSED
No. 70592
FLORIDA
PROFESSIONAL ENGINEER
APR 02 2012

PRODUCT REVISED
as complying with the Florida
Building Code
Acceptance No 12-0314.14
Expiration Date 10/30/2013
By
Miami Dade Product Control

AL-FAROOQ CORPORATION
ENGINEERS & PRODUCT DEVELOPMENT
1235 S.W. 87 AVE
MIAMI, FLORIDA 33174
TEL. (305) 264-8100 FAX. (305) 262-6978
COMP-ANL\W08-91SW

SERIES-9000 ALUM OUTSWING FRENCH DOOR (L.M.I.)

SUNSHINE WINDOWS MANUFACTURING INC.
1745 WEST 33RD PLACE
HIALEAH, FL. 33012
TEL. (305) 364-9952 FAX. (305) 828-5118

revisions:

no	date	by	description
A	03.29.12		NO CHANGE THIS SHEET

date: 11-11-08
scale: 3/8" = 1"
dr. by: HAMID
chk. by:

drawing no.
W08-91

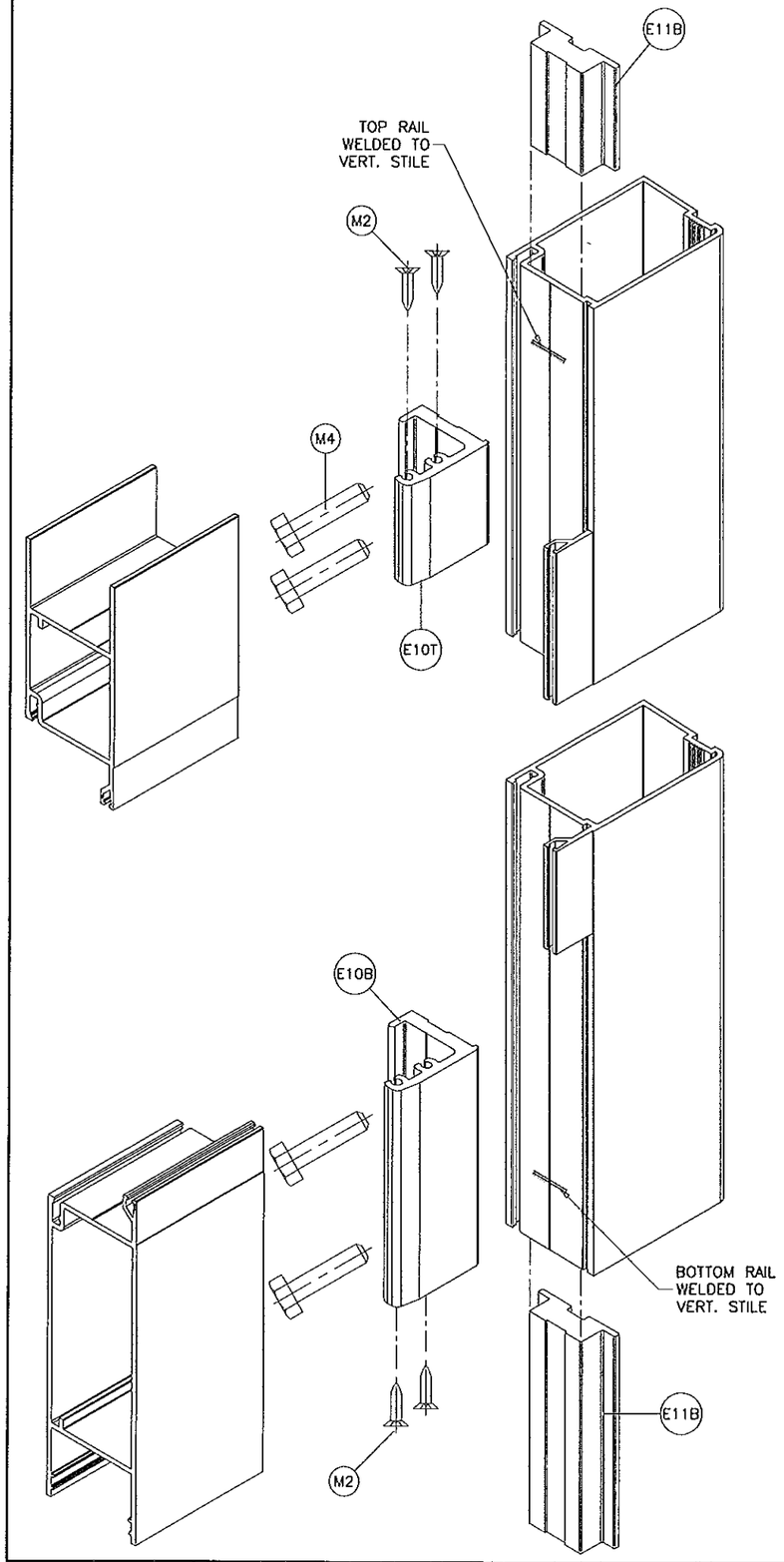

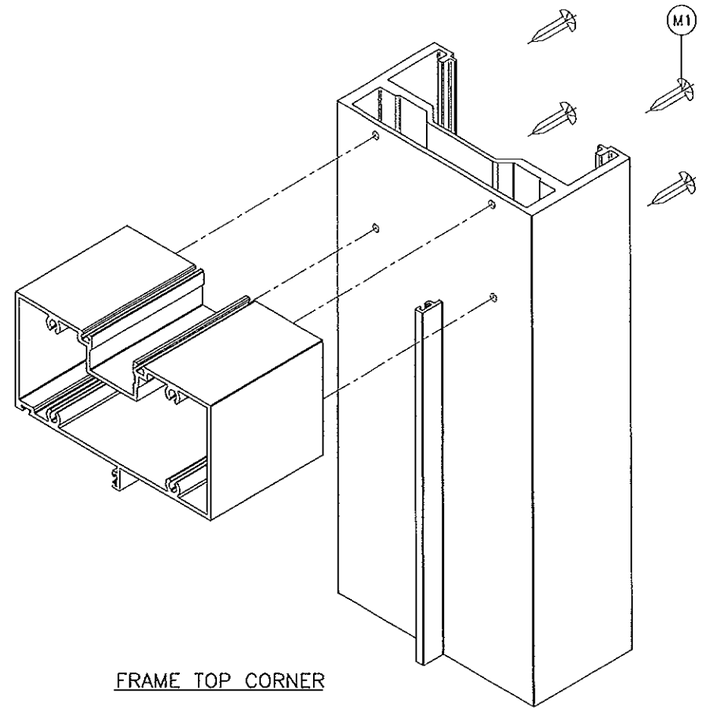

FRAME TOP CORNER

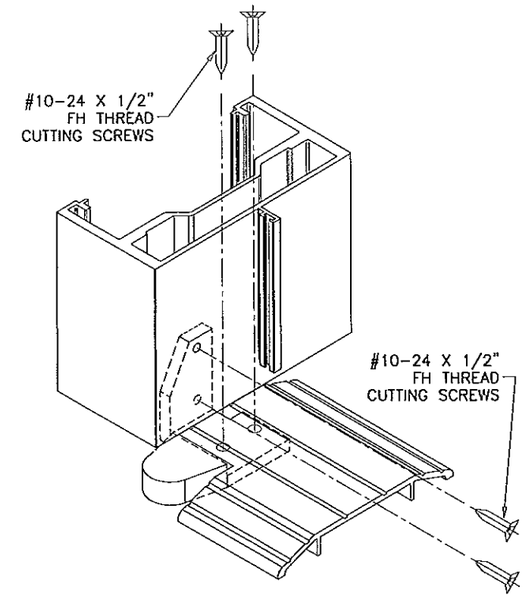

PIVOT THRESHOLD CORNER

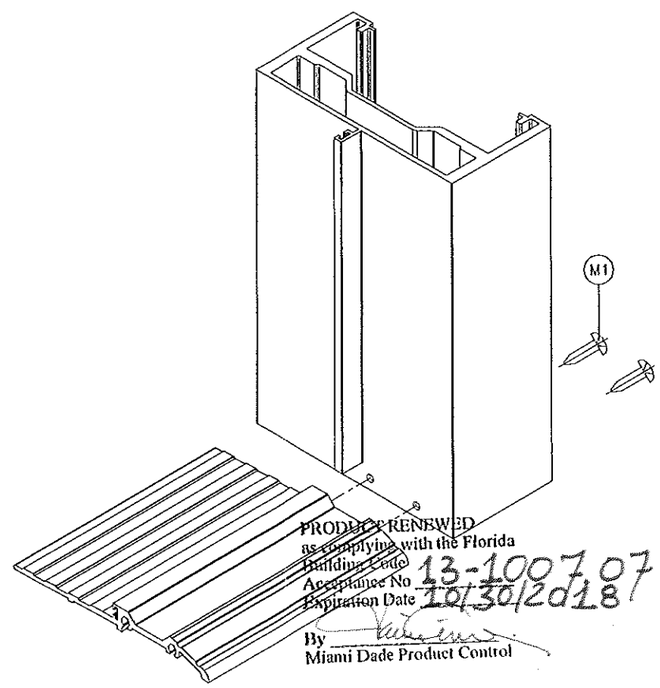

THRESHOLD CORNER

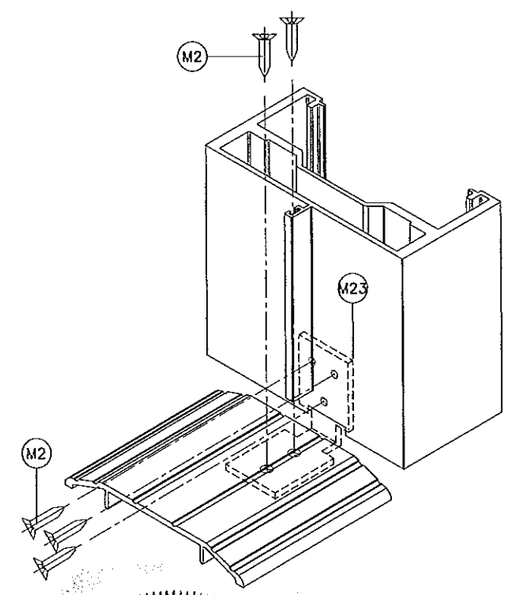

THRESHOLD CORNER

PRODUCT RENEWED
as complying with the Florida
Building Code
Acceptance No 13-1007.07
Expiration Date 10/30/2018
By
Miami Dade Product Control

Engr. JAVAD AHMAD
CIVIL
FLA. PE # 70592
C.A.N. 3538
STATE OF FLORIDA
PROFESSIONAL ENGINEER
APR 03 2012

PRODUCT REVISED
as complying with the Florida
Building Code
Acceptance No 12-0314.14
Expiration Date 10/30/2013
By
Miami Dade Product Control

AL-FAROOQ CORPORATION
ENGINEERS & PRODUCT DEVELOPMENT
1235 S.W. 87 AVE
MIAMI, FLORIDA 33174
TEL. (305) 264-8100 FAX. (305) 262-6978

COMP-ANL\W08-91.SW

SERIES-9000 ALUM OUTSWING FRENCH DOOR (L.M.I.)

SUNSHINE WINDOWS MANUFACTURING INC.
1745 WEST 33RD PLACE
HIALEAH, FL. 33012
TEL. (305) 364-9952 FAX. (305) 828-5118

revisions:

no	date	by	description
A	03.29.12		NO CHANGE THIS SHEET

date: 11-11-08
scale: 3/8" = 1"
dr. by: HAMID
chk. by:

drawing no.
W08-91