MIAMI-DADE COUNTY
PRODUCT CONTROL SECTION
11805 SW 26 Street, Room 208
Miami, Florida 33175-2474
T (786) 315-2590 F (786) 315-2599
www.miamidade.gov/economy

DEPARTMENT OF REGULATORY AND ECONOMIC RESOURCES (RER)
BOARD AND CODE ADMINISTRATION DIVISION

NOTICE OF ACCEPTANCE (NOA)

E.S. Windows, LLC
10653 NE Quaybridge Ct.
Miami, Fl.33138

SCOPE:

This NOA is being issued under the applicable rules and regulations governing the use of construction materials. The documentation submitted has been reviewed and accepted by Miami-Dade County RER -Product Control Section to be used in Miami Dade County and other areas where allowed by the Authority Having Jurisdiction (AHJ).

This NOA shall not be valid after the expiration date stated below. The Miami-Dade County Product Control Section (In Miami Dade County) and/or the AHJ (in areas other than Miami Dade County) reserve the right to have this product or material tested for quality assurance purposes. If this product or material fails to perform in the accepted manner, the manufacturer will incur the expense of such testing and the AHJ may immediately revoke, modify, or suspend the use of such product or material within their jurisdiction. RER reserves the right to revoke this acceptance, if it is determined by Miami-Dade County Product Control Section that this product or material fails to meet the requirements of the applicable building code.

This product is approved as described herein, and has been designed to comply with the Florida Building Code, including the High Velocity Hurricane Zone.

DESCRIPTION: Series "**6100**" Aluminum Sliding Glass Doors (Wet glazed) w/ reinforcements-**SMI**

APPROVAL DOCUMENT: Drawing No. **W07-26 Rev I,** titled "Series -6100 Alum Sliding Glass Door (SMI)", sheets 1 through 12 of 12, prepared by Al-Farooq Corporation, dated 04-04-07 and last revised on MAR 10, 2014, signed and sealed by Javad Ahmad, P.E., bearing the Miami-Dade County Product Control Revision stamp with the Notice of Acceptance number and expiration date by the Miami-Dade County Product Control Section.

MISSILE IMPACT RATING: Small Missile Impact Resistant

Limitation:

1. See Design Pressures (DP) Vs reinforcements & glazing options charts in sheets 3.
2. See Head/ sill anchors capacities charts in sheet 5.
3. Lower DP shall control of these charts for the entire system.
4. Glass lites wider than 36" shall have two setting blocks per FBC requirements. Max. 3/8" wide Alum spacer.
5. See approved configurations in sheet 2. Max. Door frame width not to exceed 192"

LABELING: Each unit shall bear a permanent label with the manufacturer's name or logo, Barranquilla, Columbia and series and following statement: "Miami-Dade County Product Control Approved", noted herein.

RENEWAL of this NOA shall be considered after a renewal application has been filed and there has been no change in the applicable building code negatively affecting the performance of this product.

TERMINATION of this NOA will occur after the expiration date or if there has been a revision or change in the materials, use, and/or manufacture of the product or process. Misuse of this NOA as an endorsement of any product, for sales, advertising or any other purposes shall automatically terminate this NOA. Failure to comply with any section of this NOA shall be cause for termination and removal of NOA.

ADVERTISEMENT: The NOA number preceded by the words Miami-Dade County, Florida, and followed by the expiration date may be displayed in advertising literature. If any portion of the NOA is displayed, then it shall be done in its entirety.

INSPECTION: A copy of this entire NOA shall be provided to the user by the manufacturer or its distributors and shall be available for inspection at the job site at the request of the Building Official.

This NOA **revises & renews NOA(s) # 09-1217.02 & 12-0223.45** and consists of this page 1 and evidence pages E-1 & E-2, as well as approval document mentioned above.

The submitted documentation was reviewed by **Ishaq I. Chanda, P.E.**

MIAMI-DADE COUNTY APPROVED
3/20/14

NOTICE OF ACCEPTANCE: EVIDENCE SUBMITTED

A. DRAWINGS

1. Manufacturer's die drawings and sections (Submitted under files # **09-1217.02 / #12-0223.45**)
2. Drawing No. **W07-26 Rev I,** titled "Series -6100 Alum Sliding Glass Door (SMI)", sheets 1 through 12 of 12, prepared by Al-Farooq Corporation, dated 04-04-07 and last revised on MAR 10, 2014, signed and sealed by Javad Ahmad, P.E.

B. TESTS

1. Test reports on: 1) Air Infiltration Test, per FBC, TAS 202-94
   2) Uniform Static Air Pressure Test, Loading per FBC TAS 202-94
   3) Water Resistance Test, per FBC, TAS 202-94
   4) Small Missile Impact Test per FBC, TAS 201-94
   5) Cyclic Wind Pressure Loading per FBC, TAS 203-94
   6) Forced Entry Test, per FBC 2411 3.2.1, TAS 202-94

   along with marked-up drawings and installation diagram of OX aluminum sliding glass door, prepared by, prepared by Fenestration Testing Laboratories, Test Report No. **FTL7572 (FTL 10384)** dated 11/03/13, signed and sealed by Marlin D. Brinson, P.E.
2. Test reports on: 1) Air Infiltration Test, per FBC, TAS 202-94
   2) Uniform Static Air Pressure Test, Loading per FBC TAS 202-94
   3) Water Resistance Test, per FBC, TAS 202-94
   4) Small Missile Impact Test per FBC, TAS 201-94
   5) Cyclic Wind Pressure Loading per FBC, TAS 203-94
   6) Forced Entry Test, per FBC 2411 3.2.1, TAS 202-94

   along with marked-up drawings and installation diagram of OXXX aluminum sliding glass door, prepared by, prepared by Fenestration Testing Laboratories, Test Report No. **FTL- 6293 (FTL 10063),** dated 10/15/10 and **FTL- 5669 (FTL 08057),** signed and sealed by Jorge A. Causo, P.E. and Michael Wenzel, P.E. respectively. (Submitted under files # **09-1217.02/#12-0223.45**)
2. Additional Test reports (transferred from file # **07-0828.08**)
   1) Air Infiltration Test, per FBC, TAS 202-94
   2) Uniform Static Air Pressure Test, Loading per FBC TAS 202-94
   3) Water Resistance Test, per FBC, TAS 202-94
   4) Small Missile Impact Test per FBC, TAS 201-94
   5) Cyclic Wind Pressure Loading per FBC, TAS 203-94
   6) Forced Entry Test, per FBC 2411 3.2.1, TAS 202-94

   Along with marked-up drawings and installation diagram of aluminum SGD, prepared by Fenestration Testing Laboratories, Test Report No. **FTL- 5076(FTL06165),** dated 02/22/07, FTL-**5157(FTL061116),** dated 02/14/07 and **FTL- 5158(FTL06115)** dated 02/13/07, all signed and sealed by Michael Wenzel, P.E.
   (The test report No. **FTL- 5076** has been revised an addendum letter dated July 10, 2007, issued by Fenestration testing lab, signed & sealed by Carlos S. Roinda, P. E.)

C. CALCULATIONS

1. Anchor verification calculations and structural analysis, complying with FBC-2010, prepared by Al Farooq Corporation, dated 03/06/14, signed and sealed by Javad Ahmad, P.E.
2. Glazing complies w/ ASTME-1300-02 & -04

Ishaq I. Chanda

Ishaq I. Chanda, P.E.
Product Control Examiner
NOA No. 13-1008.04
Expiration Date: June 14, 2018
Approval Date: March 27, 2014

NOTICE OF ACCEPTANCE: EVIDENCE SUBMITTED

D. QUALITY ASSURANCE

1. Miami Dade Department of Regulatory and Economic Resources (RER)

E. MATERIAL CERTIFICATIONS

1. Notice of Acceptance No. **11-0624.02** issued to E.I. DuPont DeNemours & Co., Inc. for their "**DuPont Sentry Glass ® Interlayer**", expiring on 01/14/17.
2. Notice of Acceptance No. **11-0624.01** issued to E.I. DuPont DeNemours & Co., Inc. for their "**DuPont Butacite PVB ® Interlayer**", expiring on 12/11/16.

F. STATEMENTS

1. Statement letter of conformance to FBC 2010 and letter of no financial interest, prepared by Al Farooq Corporation, dated 10/02/13, signed and sealed by Javad Ahmad, P.E.
2. Lab compliance as part of the above referenced test report.
3. E-mail dated Nov 14, 2013, issued by Fenestration Testing Lab for Test report # FTL 6293 for part# ES-6023 height confirmation being 3.5", signed by Ms. Lliana Sanchez.
4. Distribution agreement dated 03/05/14 between ES Windows, LLC and Energia Solar SA, Colombia, signed by Andres Chamorro (Gen MGR) and Clara Garcia (Sales MGR), respectively on behalf of their companies

G. OTHER

1. This NOA **revises & renews** NOA # **09-1217.02 & 12-0223.45,** expiring on 06/14/14.
2. Test proposals, # 11-0843 dated July 20, 2011, # 10-0466, dated 07-04-10, # 08-0847, dated 06-24-08 and # 06-0305, dated 07/18/06 approved by BCCO.
3. Additional reference NOA file # 13-1007.03 (Series 6100 Alum SGD w/ reinf (Dry glazed)).
4. Previous associated NOA(s) files are #12-0223.45, #09-1217.02, #07-0828.08 and #07-0411.12

Ishaq I. Chanda

Ishaq I. Chanda, P.E.
Product Control Examiner
NOA No. 13-1008.04
Expiration Date: June 14, 2018
Approval Date: March 27, 2014

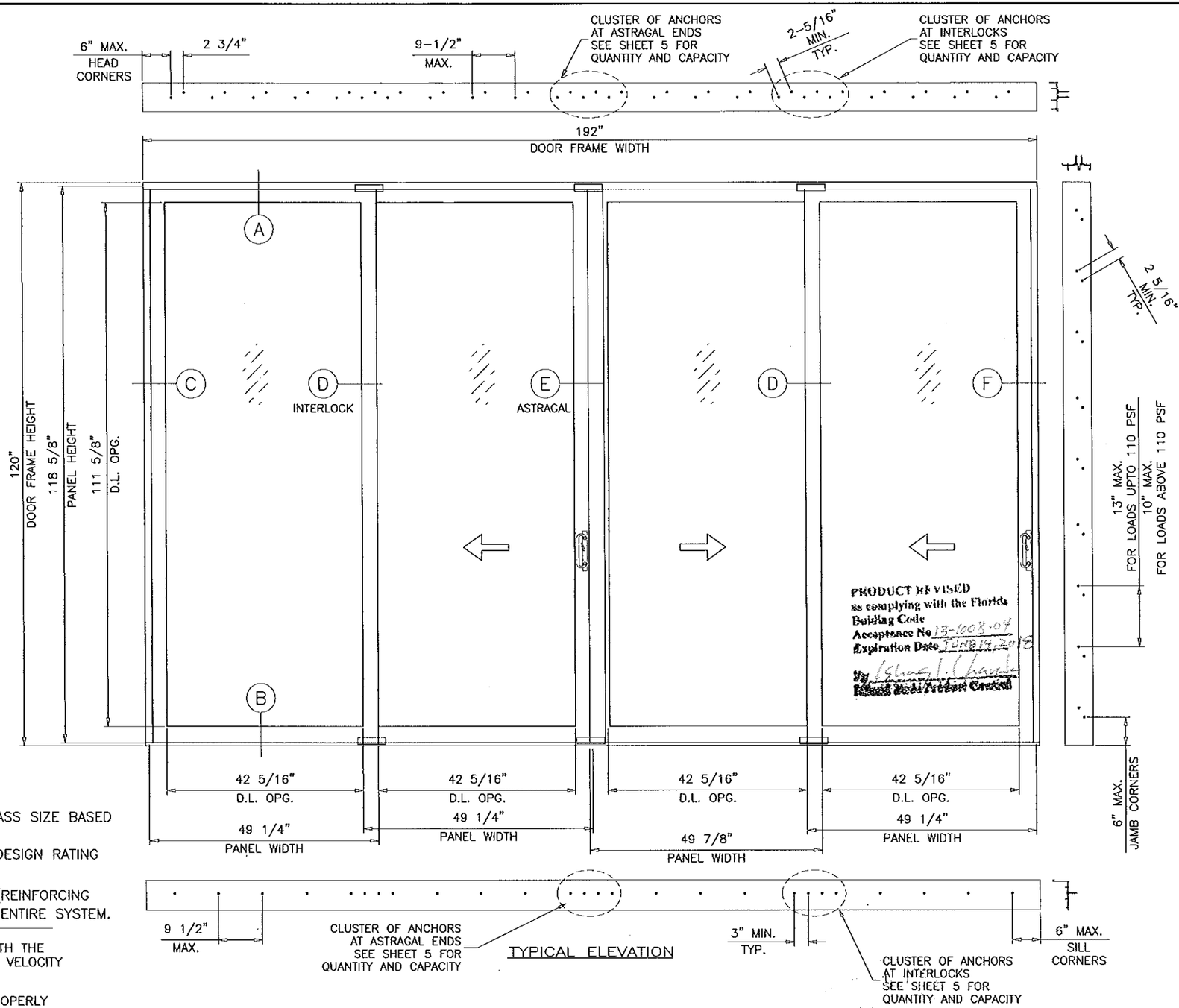

TYPICAL ELEVATION

PRODUCT REVISED
as complying with the Florida Building Code
Acceptance No 13-1008.04
Expiration Date JUNE 14, 2018
By [signature]
Miami Dade Product Control

DAYLITE OPENINGS:
D.L.O. HEIGHT = PANEL HEIGHT – 7.000"
D.L.O. WIDTH = PANEL WIDTH – 6.937"
PANEL HEIGHT = DOOR FRAME HEIGHT – 1.375"

SERIES-6100 ALUMINUM SLIDING GLASS DOOR

SEE SHEET 3 FOR DESIGN LOAD CAPACITY OF DESIRED GLASS SIZE BASED ON APPLICABLE GLASS TYPE AND REINFORCING OPTION.

USING CHART ON SHEET 5 SELECT ANCHOR OPTION WITH DESIGN RATING MORE THAN DESIGN LOADS REQUIRED.

LOWER DESIGN PRESSURES FROM DESIGN LOAD CAPACITY (REINFORCING OPTION/GLASS TYPE) OR ANCHOR CHARTS WILL APPLY TO ENTIRE SYSTEM.

THIS PRODUCT HAS BEEN DESIGNED AND TESTED TO COMPLY WITH THE REQUIREMENTS OF THE FLORIDA BUILDING CODE INCLUDING HIGH VELOCITY HURRICANE ZONE (HVHZ).

1BY OR 2BY WOOD BUCKS BY OTHERS, MUST BE ANCHORED PROPERLY TO TRANSFER LOADS TO THE STRUCTURE.

ANCHORS SHALL BE AS LISTED, SPACED AS SHOWN ON DETAILS, ANCHORS EMBEDMENT TO BASE MATERIAL SHALL BE BEYOND WALL DRESSING OR STUCCO.

ANCHORING OR LOADING CONDITIONS NOT SHOWN IN THESE DETAILS ARE NOT PART OF THIS APPROVAL.

A LOAD DURATION INCREASE IS USED IN DESIGN OF ANCHORS INTO WOOD ONLY.

MATERIALS INCLUDING BUT NOT LIMITED TO STEEL/METAL SCREWS, THAT COME INTO CONTACT WITH OTHER DISSIMILAR MATERIALS SHALL MEET THE REQUIREMENTS OF THE FLORIDA BLDG. CODE SECTION 2003.8.4.

THESE DOORS ARE RATED FOR SMALL MISSILE IMPACT.
MIAMI-DADE COUNTY APPROVED IMPACT RESISTANT SHUTTERS REQUIRED FOR INSTALLATIONS UP TO 30 FT. OF GRADE.
SHUTTERS NOT REQD. FOR INSTALLATIONS ABOVE 30 FT. OF GRADE.

VERIFY COMPLIANCE WITH EGRESS LIMITATIONS WHERE REQUIRED.

INSUL. LAMINATED GLASS
WET GLAZED

Engr: JAVAD AHMAD
CIVIL
FLA. PE # 70592
C.A.N. 3538
MAR 10 2014

AL-FAROOQ CORPORATION
ENGINEERS & PRODUCT DEVELOPMENT
1235 S.W. 87 AVE
MIAMI, FLORIDA 33174
TEL. (305) 264-8100 FAX. (305) 262-6978

COMP-ANL\W07-26ES

SERIES-6100 ALUM SLIDING GLASS DOOR (S.M.I.)

E.S. WINDOWS, LLC
5220 N.W. 72 AVE. BAY #4
MIAMI, FL. 33166
TEL. (305) 624-7775 FAX. (305) 624-7777

revisions:

no	date	by	description
E	07.29.11		NO CHANGE THIS SHEET
F	10.03.11		UPDATED TO 2010 FBC
G	06.18.12		REV. PER PERA COMMENTS
H	10.01.13		NO CHANGE THIS SHEET
I	03.06.14		REV. PER RER COMMENTS

date: 04-04-07
scale: 1/2"=1'-0"
dr. by: HAMID
chk. by:

drawing no.
W07-26

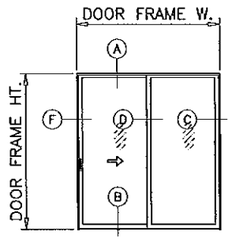

XO (SHOWN)
OX
XX

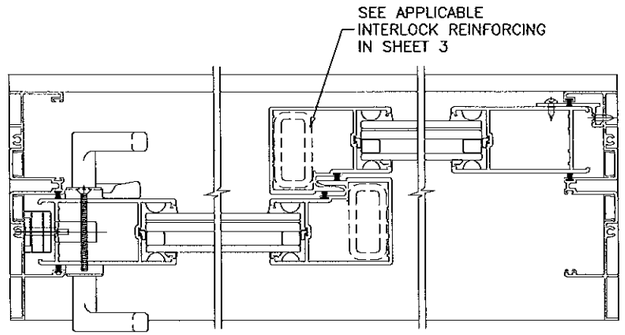

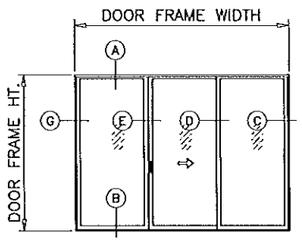

OXO (SHOWN)
XXX

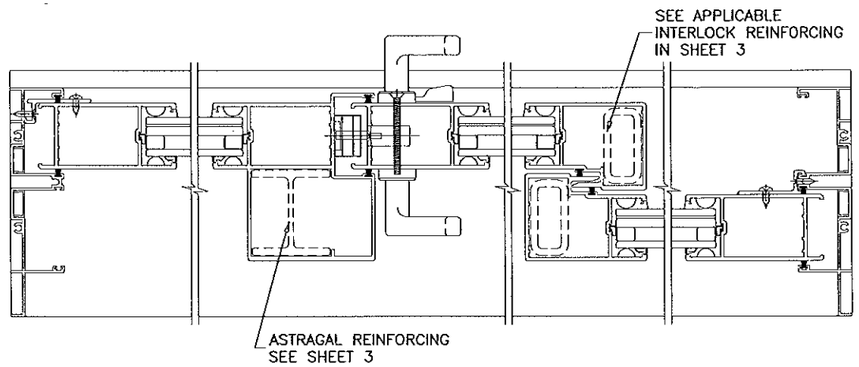

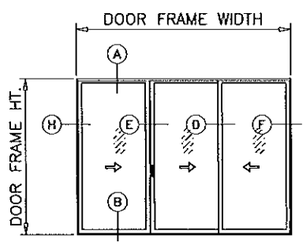

XXX (SHOWN)

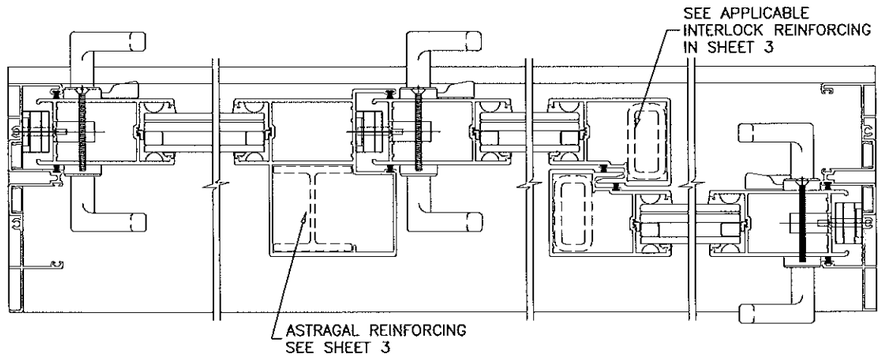

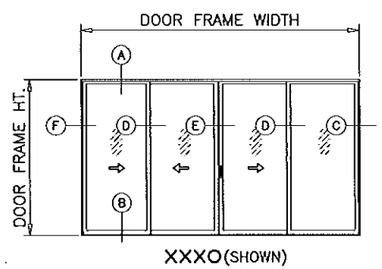

XXXO (SHOWN)
XXXX
OXXO

APPROVED CONFIGURATIONS

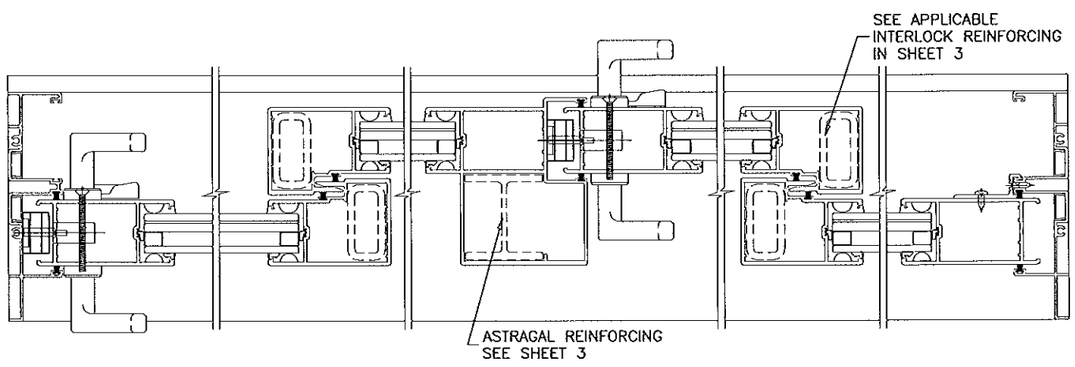

NOTE : OVERALL DOOR FRAME WIDTH NOT TO EXCEED 192" FOR 4 PANEL CONFIGURATIONS

NOTE:
CONFIGURATIONS SHOWN FOR ILLUSTRATION PURPOSE
SEE APPLICABLE DESIGN PRESSURE & SIZE IN
SHEET 3 AND ANCHOR INSTALLATION IN SHEET 5.

PRODUCT REVISED
as complying with the Florida
Building Code
Acceptance No. 13-1008.04
Expiration Date 6/14/18

Engr: JAVAD AHMAD
CIVIL
FLA. PE # 70592
C.A.N. 3538

MAR 10 2014

AL-FAROOQ CORPORATION
ENGINEERS & PRODUCT DEVELOPMENT
1235 S.W. 87 AVE
MIAMI, FLORIDA 33174
TEL. (305) 264-8100 FAX. (305) 262-6978
COMP-ANL\W07-26ES

SERIES-6100 ALUM SLIDING GLASS DOOR (S.M.I.)

E.S. WINDOWS, LLC
5220 N.W. 72 AVE. BAY #4
MIAMI, FL. 33166
TEL. (305) 624-7775 FAX. (305) 624-7777

revisions:

no	date	by	description
E	07.29.11		NO CHANGE THIS SHEET
F	10.03.11		NO CHANGE THIS SHEET
G	06.18.12		REV. PER PERA COMMENTS
H	10.01.13		NO CHANGE THIS SHEET
I	03.06.14		REV. PER RER COMMENTS

date: 04-04-07
scale: –
dr. by: HAMID
chk. by:

drawing no.
W07-26

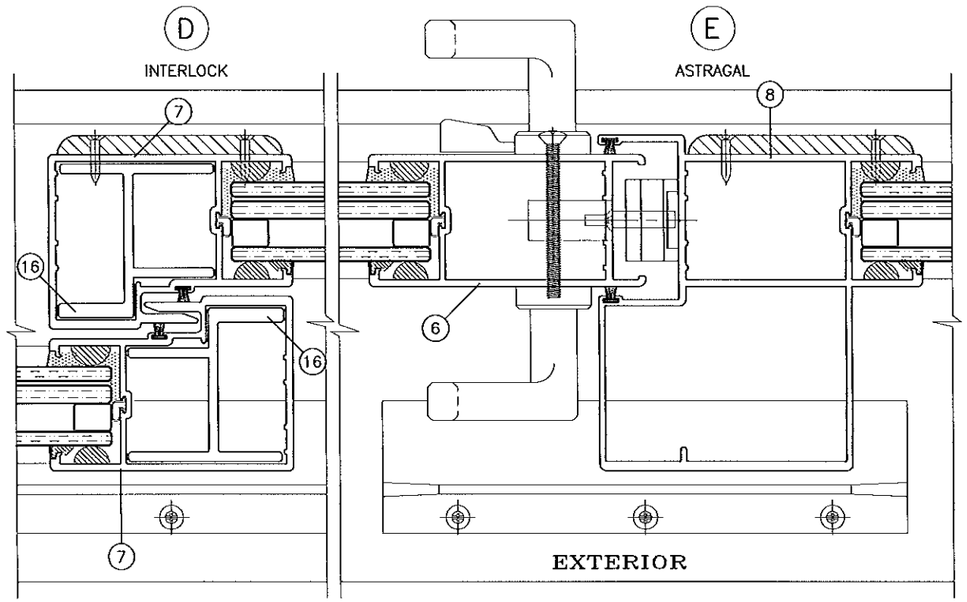

REINFORCING OPTION #3

ALUMINUM REINFORCING AT INTERLOCK

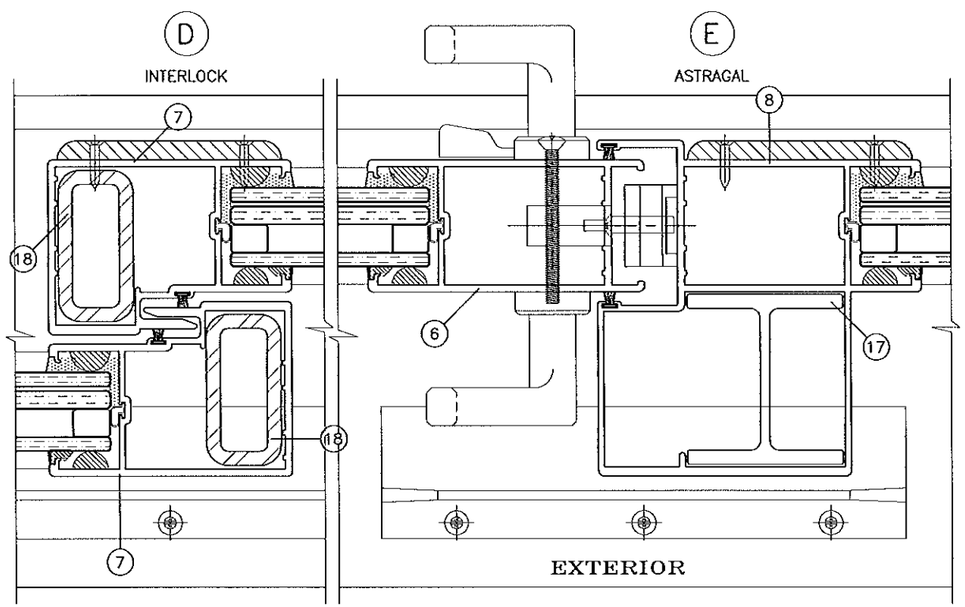

REINFORCING OPTION #4

STEEL REINFORCING AT INTERLOCK
ALUMINUM REINFORCING AT ASTRAGAL

NOTE:
GLASS CAPACITIES ON THIS SHEET ARE BASED ON ASTM E1300-09 (3 SEC. GUSTS) AND FLORIDA BUILDING COMMISSION DECLARATORY STATEMENT DCA05-DEC-219

DESIGN LOAD CAPACITY - PSF
INSULATED LAMINATED GLASS TYPES 'B' & 'B1'

PANEL WIDTH NOMINAL INCHES	DOOR HEIGHT INCHES	REINF. OPTION #3		REINF. OPTION #4	
		EXT.(+)	INT.(-)	EXT.(+)	INT.(-)
30	82	85.0	145.0	85.0	145.0
36		85.0	145.0	85.0	145.0
42		85.0	145.0	85.0	145.0
44		85.0	145.0	85.0	145.0
48		85.0	140.0	85.0	145.0
54		–	–	85.0	111.0
60		–	–	85.0	100.0
30	96	85.0	145.0	85.0	145.0
36		85.0	145.0	85.0	145.0
42		–	–	85.0	125.0
44		–	–	85.0	125.0
48		–	–	85.0	125.0
54		–	–	85.0	125.0
60		–	–	85.0	100.0
30	102	85.0	145.0	85.0	125.0
36		85.0	145.0	85.0	125.0
42		–	–	85.0	125.0
44		–	–	85.0	125.0
48		–	–	85.0	125.0
54		–	–	85.0	111.0
30	108	85.0	145.0	85.0	145.0
36		85.0	145.0	85.0	145.0
42		–	–	85.0	125.0
44		–	–	85.0	125.0
48		–	–	85.0	125.0
30	114	–	–	85.0	110.0
36		–	–	85.0	110.0
42		–	–	85.0	110.0
44		–	–	85.0	110.0
48		–	–	85.0	110.0
30	120	–	–	85.0	110.0
36		–	–	85.0	110.0
42		–	–	85.0	110.0
44		–	–	85.0	110.0
48		–	–	85.0	110.0

SEE SHEET 4 FOR GLASS TYPES 'B' & 'B1'

PRODUCT REVISED
as complying with the Florida Building Code
Acceptance No. 13-1008.04
Expiration Date 6/14/18
By Shang L. Chang
Miami Dade Product Control

Engr: JAVAD AHMAD
CIVIL
FLA. PE # 70592
C.A.N. 3538
MAR 18 2014

AL-FAROOQ CORPORATION
ENGINEERS & PRODUCT DEVELOPMENT
1235 S.W. 87 AVE
MIAMI, FLORIDA 33174
TEL. (305) 264-8100 FAX. (305) 262-6978

COMP-ANL\W07-26ES

SERIES-6100 ALUM SLIDING GLASS DOOR (S.M.I.)

E.S. WINDOWS, LLC
5220 N.W. 72 AVE. BAY #4
MIAMI, FL. 33166
TEL. (305) 624-7777 FAX. (305) 624-7777

revisions:

no	date	by	description
E	07.29.11		NO CHANGE THIS SHEET
F	10.03.11		NO CHANGE THIS SHEET
G	06.18.12		REV. PER PERA COMMENTS
H	10.01.13		NO CHANGE THIS SHEET
I	03.06.14		REV. PER RER COMMENTS

date: 04-04-07
scale: 1/2" = 1"
dr. by: HAMID
chk. by:

drawing no.
W07-26

sheet 3 of 12

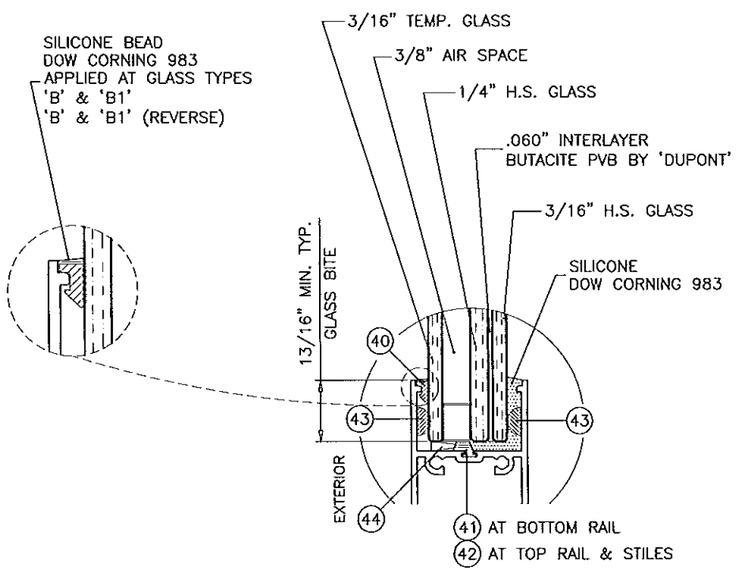

GLASS TYPE 'B'

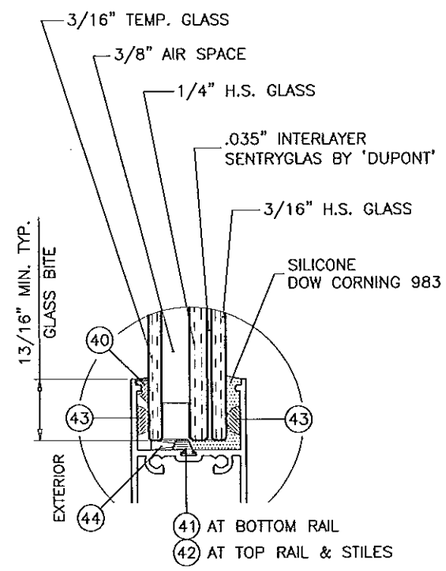

GLASS TYPE 'B1'

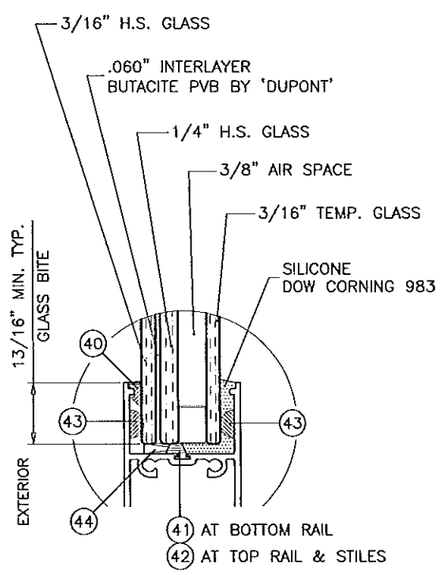

GLASS TYPE 'B' (REVERSE)

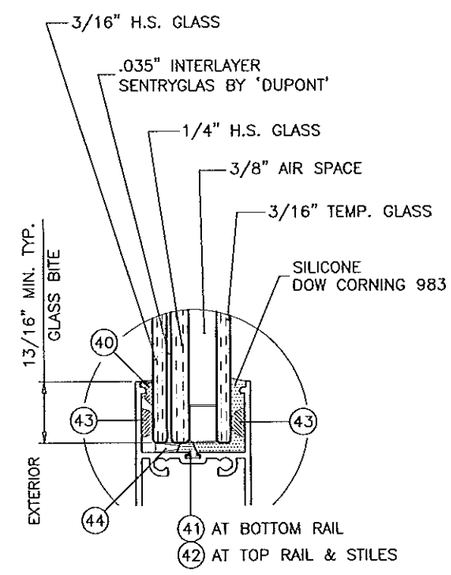

GLASS TYPE 'B1' (REVERSE)

PRODUCT REVISED
as complying with the Florida Building Code
Acceptance No. 13-1008.04
Expiration Date 6/14/18
By [signature]
Miami-Dade Product Control

Engr: JAVAD AHMAD
CIVIL
FLA. PE # 70592
C.A.N. 3538

MAY 0 2014

AL-FAROOQ CORPORATION
ENGINEERS & PRODUCT DEVELOPMENT
1235 S.W. 87 AVE
MIAMI, FLORIDA 33174
TEL. (305) 264-8100 FAX. (305) 262-6978
COMP-ANL\W07-26ES

SERIES-6100 ALUM SLIDING GLASS DOOR (S.M.I.)

E.S. WINDOWS, LLC
5220 N.W. 72 AVE. BAY #4
MIAMI, FL. 33166
TEL. (305) 624-7777 FAX. (305) 624-7777

revisions:

no	date	by	description
E	07.29.11		NO CHANGE THIS SHEET
F	10.03.11		NO CHANGE THIS SHEET
G	06.18.12		REV. PER PERA COMMENTS
H	10.01.13		NO CHANGE THIS SHEET
I	03.06.14		NO CHANGE THIS SHEET

date: 04-04-07
scale: 1/2" = 1"
dr. by: HAMID
chk. by:

drawing no.
W07-26

sheet 4 of 12

TYPICAL ANCHORS: SEE ELEV. FOR SPACING

AT HEAD

TYPE 'A'– 1/4" DIA. ULTRACON BY 'ELCO' (Fu=177 KSI, Fy=155 KSI)
INTO 2BY WOOD BUCKS OR WOOD STRUCTURES
1–1/2" MIN. PENETRATION INTO WOOD

THRU 1BY BUCKS INTO CONCRETE
1–1/2" MIN. EMBED INTO CONCRETE

TYPE 'B'– 1/4" DIA. ULTRACON BY 'ELCO' (Fu=177 KSI, Fy=155 KSI)
DIRECTLY INTO CONCRETE
1–1/2" MIN. EMBED

TYPE 'C'– #14 SMS OR SELF DRILLING SCREWS (GRADE 2 CRS)
INTO MIAMI–DADE COUNTY APPROVED MULLIONS (1/8" THK. MIN.)
INTO METAL STRUCTURES
STEEL : 12 GA. MIN. (Fy = 36 KSI MIN.)
ALUMINUM : 1/8" THK. MIN. (6063–T5 MIN.)
(STEEL IN CONTACT WITH ALUMINUM TO BE PLATED OR PAINTED)

AT SILL

TYPE 'B'– 1/4" DIA. ULTRACON BY 'ELCO' (Fu=177 KSI, Fy=155 KSI)
DIRECTLY INTO CONCRETE
1–3/4" MIN. EMBED

AT JAMBS

TYPE 'A'– 1/4" DIA. ULTRACON BY 'ELCO' (Fu=177 KSI, Fy=155 KSI)
INTO 2BY WOOD BUCKS OR WOOD STRUCTURES
1–1/2" MIN. PENETRATION INTO WOOD

THRU 1BY BUCKS INTO CONC. OR MASONRY
1–1/4" MIN. EMBED INTO CONC. OR MASONRY

TYPE 'B'– 1/4" DIA. ULTRACON BY 'ELCO' (Fu=177 KSI, Fy=155 KSI)
DIRECTLY INTO CONC. OR MASONRY
1–1/4" MIN. EMBED INTO CONC. OR MASONRY

TYPE 'C'– #14 SMS OR SELF DRILLING SCREWS (GRADE 2 CRS)
INTO MIAMI–DADE COUNTY APPROVED MULLIONS (1/8" THK. MIN.)
INTO METAL STRUCTURES
STEEL : 12 GA. MIN. (Fy = 36 KSI MIN.)
ALUMINUM : 1/8" THK. MIN. (6063–T5 MIN.)
(STEEL IN CONTACT WITH ALUMINUM TO BE PLATED OR PAINTED)

ANCHOR EDGE DISTANCES

INTO CONCRETE = 2–1/2" MIN.
INTO WOOD STRUCTURE = 1" MIN.
INTO METAL STRUCTURE = 3/4" MIN.

CONCRETE AT HEAD, SILL OR JAMBS f'c = 3000 PSI MIN.
C–90 HOLLOW/FILLED BLOCK AT JAMBS f'm = 2000 PSI MIN.

HEAD ANCHOR LOAD CAPACITY – PSF

ANCHOR TYPE		ANCHOR TYPE 'A'		ANCHOR TYPE 'B'		ANCHOR TYPE 'C'
AVERAGE PANEL WIDTH INCHES	DOOR FRAME HEIGHT INCHES	6 ANCHORS AT MTG. STILE ENDS	7 ANCHORS AT MTG. STILE ENDS	4 ANCHORS AT MTG. STILE ENDS	5 ANCHORS AT MTG. STILE ENDS	4 ANCHORS AT MTG. STILE ENDS
		EXT. (+) INT. (–)	EXT. (+) INT. (–)	EXT. (+) INT. (–)	EXT. (+) INT. (–)	EXT. (+) INT. (–)
30	82	145.0	145.0	145.0	145.0	145.0
36		145.0	145.0	145.0	145.0	145.0
42		145.0	145.0	145.0	145.0	145.0
44		145.0	145.0	145.0	145.0	145.0
48		145.0	145.0	145.0	145.0	145.0
54		125.0	125.0	125.0	125.0	125.0
60		125.0	125.0	125.0	125.0	125.0
30	96	145.0	145.0	145.0	145.0	145.0
36		145.0	145.0	145.0	145.0	145.0
42		125.0	125.0	125.0	125.0	125.0
44		125.0	125.0	125.0	125.0	125.0
48		119.5	125.0	125.0	125.0	125.0
54		110.8	125.0	120.6	125.0	125.0
60		104.3	121.7	113.5	125.0	125.0
30	102	145.0	145.0	145.0	145.0	145.0
36		136.6	145.0	145.0	145.0	145.0
42		121.4	125.0	125.0	125.0	125.0
44		117.3	125.0	125.0	125.0	125.0
48		110.3	125.0	120.0	125.0	125.0
54		102.0	119.0	110.9	125.0	125.0
30	108	145.0	145.0	145.0	145.0	145.0
36		127.5	145.0	138.7	145.0	145.0
42		113.0	125.0	123.0	125.0	125.0
44		109.1	125.0	118.7	125.0	125.0
48		102.4	119.5	111.4	125.0	125.0
30	114	139.1	110.0	110.0	110.0	110.0
36		119.5	110.0	110.0	110.0	110.0
42		105.7	110.0	110.0	110.0	110.0
44		102.0	110.0	110.0	110.0	110.0
48		95.6	110.0	104.0	110.0	110.0
30	120	131.1	110.0	110.0	110.0	110.0
36		112.5	110.0	110.0	110.0	110.0
42		99.3	110.0	108.1	110.0	110.0
44		95.8	110.0	104.2	110.0	110.0
48		89.6	104.6	97.5	110.0	110.0

SILL ANCHOR LOAD CAPACITY – PSF

ANCHOR TYPE		ANCHOR TYPE 'B'	
AVERAGE PANEL WIDTH INCHES	DOOR FRAME HEIGHT INCHES	4 ANCHORS AT MTG. STILE ENDS	5 ANCHORS AT MTG. STILE ENDS
		EXT. (+) INT. (–)	EXT. (+) INT. (–)
30	82	145.0	145.0
36		145.0	145.0
42		145.0	145.0
44		145.0	145.0
48		145.0	145.0
54		125.0	125.0
60		125.0	125.0
30	96	145.0	145.0
36		145.0	145.0
42		125.0	125.0
44		125.0	125.0
48		125.0	125.0
54		120.6	125.0
60		113.5	125.0
30	102	145.0	145.0
36		145.0	145.0
42		125.0	125.0
44		125.0	125.0
48		120.0	125.0
54		110.9	125.0
30	108	145.0	145.0
36		138.7	145.0
42		123.0	125.0
44		118.7	125.0
48		111.4	125.0
30	114	110.0	110.0
36		110.0	110.0
42		110.0	110.0
44		110.0	110.0
48		104.0	110.0
30	120	110.0	110.0
36		110.0	110.0
42		108.1	110.0
44		104.2	110.0
48		97.5	110.0

PRODUCT REVISED
as complying with the Florida
Building Code
Acceptance No. 13-1008.04
Expiration Date
By

NOTE:
SEE SHEET 3 FOR DESIGN LOAD CAPACITY OF DESIRED GLASS SIZE.
USING CHART ON THIS SHEET SELECT ANCHOR OPTION WITH DESIGN RATING MORE THAN DESIGN LOADS REQUIRED.
LOWER DESIGN PRESSURES FROM GLASS OR HEAD OR SILL ANCHOR CHARTS WILL APPLY TO ENTIRE SYSTEM.

Engr: JAVAD AHMAD
CIVIL
FLA. PE # 70592
C.A.N. 3538

MAR 1 7 2014

AL-FAROOQ CORPORATION
ENGINEERS & PRODUCT DEVELOPMENT
1235 S.W. 87 AVE
MIAMI, FLORIDA 33174
TEL. (305) 264-8100 FAX. (305) 262-6978
COMP–ANL\W07–26ES

SERIES–6100 ALUM SLIDING GLASS DOOR (S.M.I.)

E.S. WINDOWS, LLC
5220 N.W. 72 AVE. BAY #4
MIAMI, FL. 33166
TEL. (305) 624–7775 FAX. (305) 624–7777

revisions:

no	date	by	description
E	07.29.11		NO CHANGE THIS SHEET
F	10.03.11		NO CHANGE THIS SHEET
G	06.18.12		REV. PER PERA COMMENTS
H	10.01.13		NO CHANGE THIS SHEET
I	03.06.14		REV. PER RER COMMENTS

date: 04–04–07
scale: 1/2" = 1"
dr. by: HAMID
chk. by:

drawing no.
W07–26

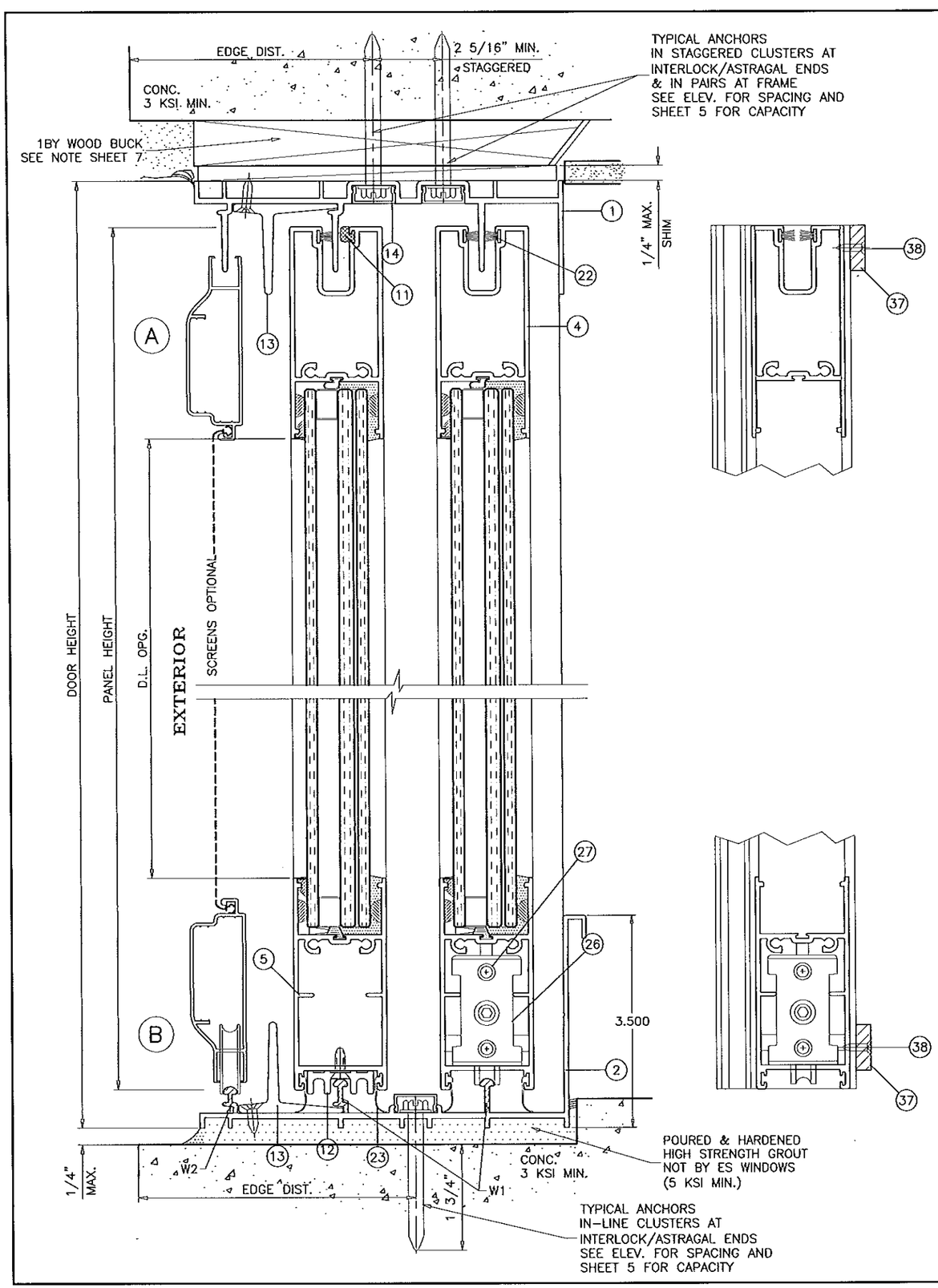

SEALANT:

ALL JOINTS AND FRAME CONNECTIONS SEALED WITH WHITE/ALUMINUM COLORED SILICONE.

WEEPHOLES:

W1 = 2-5/8" LONG WEEP NOTCH AT EACH END
W2 = 1" LONG WEEP NOTCH AT EACH END

PRODUCT REVISED
as complying with the Florida Building Code
Acceptance No 13-1008.04
Expiration Date 6/14/18
By [signature]
Miami-Dade Product Control

Engr: JAVAD AHMAD
CIVIL
FLA. PE # 70592
C.A.N. 5538
MAR 17 2014

AL-FAROOQ CORPORATION
ENGINEERS & PRODUCT DEVELOPMENT
1235 S.W. 87 AVE
MIAMI, FLORIDA 33174
TEL. (305) 264-8100 FAX. (305) 262-6978
COMP-ANL\W07-26ES

SERIES-6100 ALUM SLIDING GLASS DOOR (S.M.I.)

E.S. WINDOWS, LLC
5220 N.W. 72 AVE. BAY #4
MIAMI, FL. 33166
TEL. (305) 624-7775 FAX. (305) 624-7777

revisions:

no	date	by	description
E	07.29.11		NO CHANGE THIS SHEET
F	10.03.11		NO CHANGE THIS SHEET
G	06.18.12		REV. PER PERA COMMENTS
H	10.01.13		FRAME SILL REVISED
I	03.06.14		REV. PER RER COMMENTS

date: 04-04-07
scale: 1/2" = 1"
dr. by: HAMID
chk. by:

drawing no.
W07-26

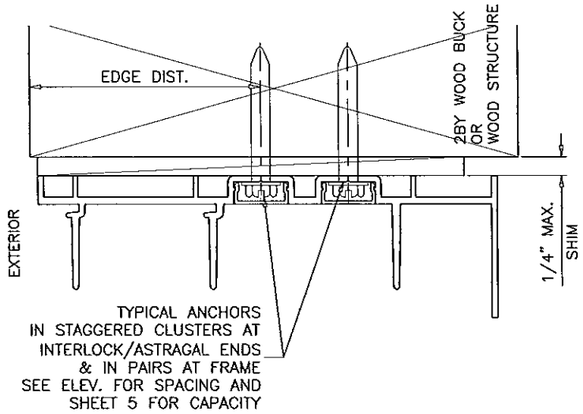

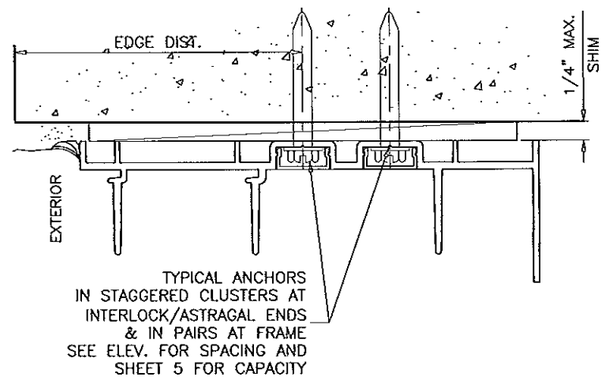

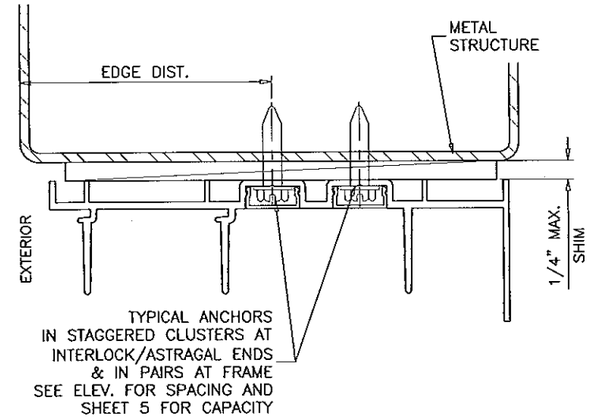

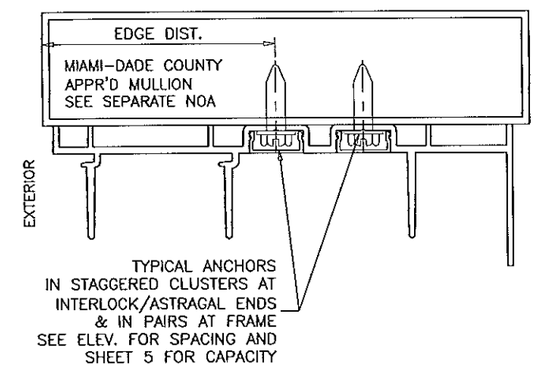

1BY OR 2BY WOOD BUCKS AND METAL STRUCTURES NOT BY E.S. WINDOWS MUST SUPPORT LOADS IMPOSED BY GLAZING SYSTEM AND TRANSFER THEM TO THE BUILDING STRUCTURE.

PRODUCT REVISED
as complying with the Florida Building Code
Acceptance No 13-1108.04
Expiration Date 6/14/18
By [illegible]
Miami Dade Product Control

Engr: JAVAD AHMAD
CIVIL
FLA. PE # 70592
C.A.N. 3538

MAR 10 2014

AL-FAROOQ CORPORATION
ENGINEERS & PRODUCT DEVELOPMENT
1235 S.W. 87 AVE
MIAMI, FLORIDA 33174
TEL (305) 264-8100 FAX. (305) 262-6978

COMP-ANL\W07-26ES

SERIES-6100 ALUM SLIDING GLASS DOOR (S.M.I.)

E.S. WINDOWS, LLC
5220 N.W. 72 AVE. BAY #4
MIAMI, FL. 33166
TEL. (305) 624-7775 FAX. (305) 624-7777

revisions:

no	date	by	description
E	07.29.11		NO CHANGE THIS SHEET
F	10.03.11		NO CHANGE THIS SHEET
G	06.18.12		REV. PER PERA COMMENTS
H	10.01.13		NO CHANGE THIS SHEET
I	03.06.14		REV. PER RER COMMENTS

date: 04-04-07
scale: 1/2" = 1"
dr. by: HAMID
chk. by:

drawing no.
W07-26

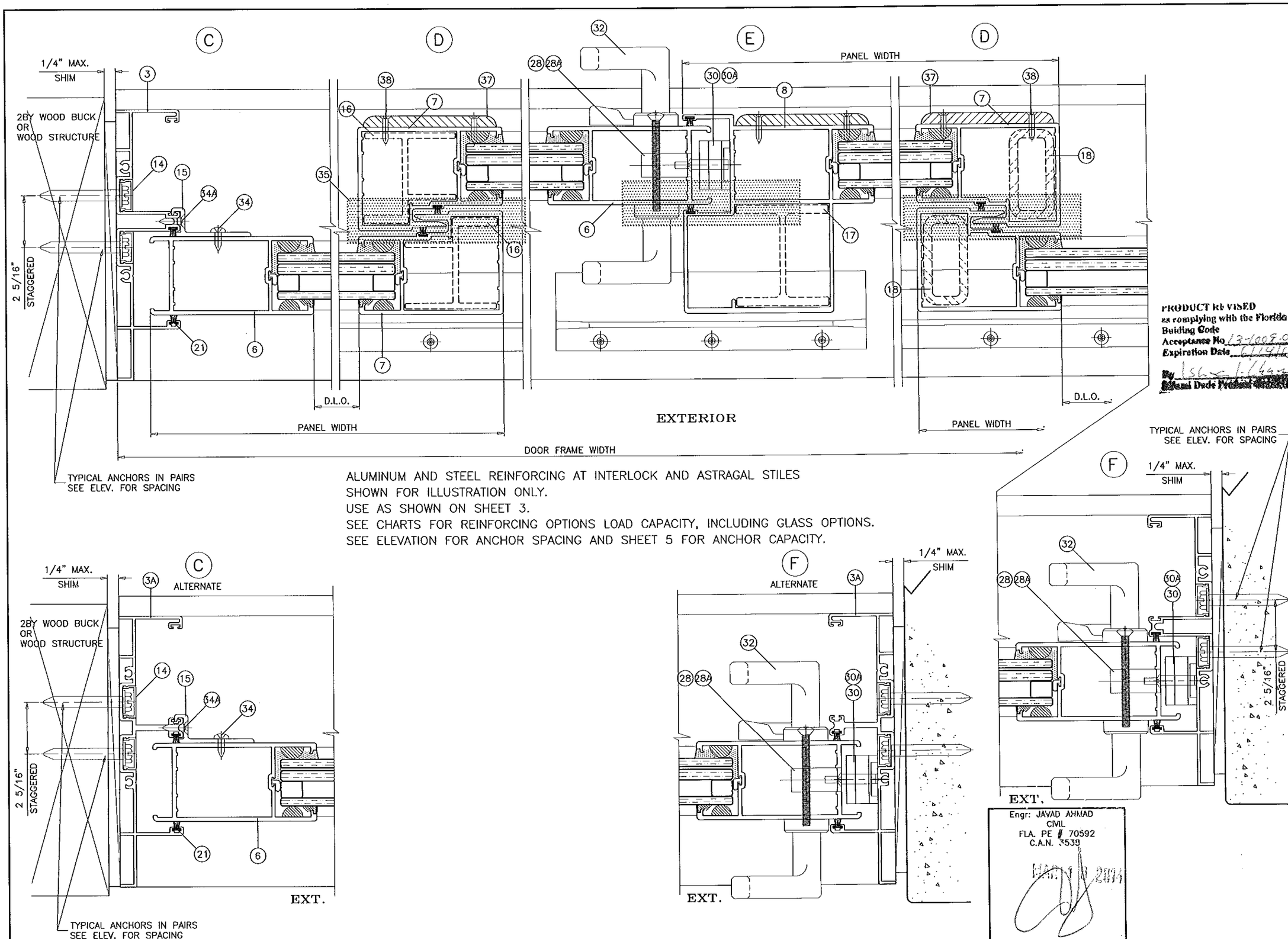

ALUMINUM AND STEEL REINFORCING AT INTERLOCK AND ASTRAGAL STILES
SHOWN FOR ILLUSTRATION ONLY.
USE AS SHOWN ON SHEET 3.
SEE CHARTS FOR REINFORCING OPTIONS LOAD CAPACITY, INCLUDING GLASS OPTIONS.
SEE ELEVATION FOR ANCHOR SPACING AND SHEET 5 FOR ANCHOR CAPACITY.

PRODUCT REVISED
as complying with the Florida
Building Code
Acceptance No. 13-1008.04
Expiration Date 6/19/18
By
Miami Dade Product Control

Engr: JAVAD AHMAD
CIVIL
FLA. PE # 70592
C.A.N. 3539

AL-FAROOQ CORPORATION
ENGINEERS & PRODUCT DEVELOPMENT
1235 S.W. 87 AVE
MIAMI, FLORIDA 33174
TEL. (305) 264-8100 FAX. (305) 262-6978

COMP-ANL\W07-26ES

SERIES-6100 ALUM SLIDING GLASS DOOR (S.M.I.)

E.S. WINDOWS, LLC
5220 N.W. 72 AVE. BAY #4
MIAMI, FL. 33166
TEL. (305) 624-7775 FAX. (305) 624-7777

revisions:

no	date	by	description
E	07.29.11		ALT. JAMB ADDED
F	10.03.11		NO CHANGE THIS SHEET
G	06.18.12		REV. PER PERA COMMENTS
H	10.01.13		NO CHANGE THIS SHEET
I	03.06.14		REV. PER RER COMMENTS

date: 04-04-07
scale: 1/2" = 1"
dr. by: HAMID
chk. by:

drawing no.
W07-26

sheet 8 of 12

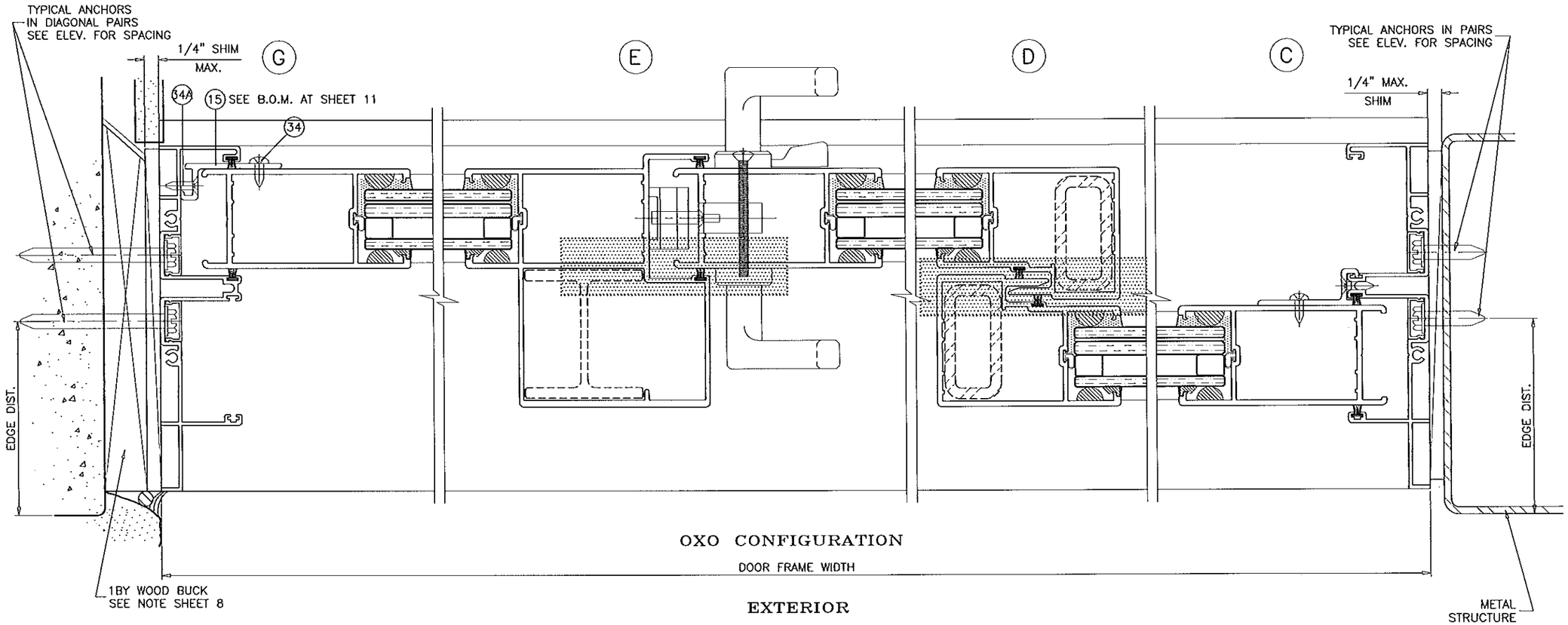

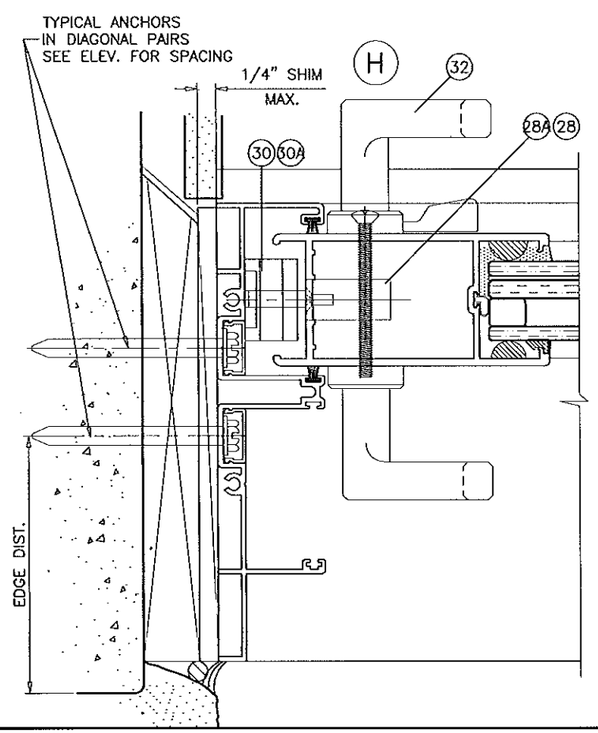

PRODUCT REVISED
as complying with the Florida
Building Code
Acceptance No 13-1008.04
Expiration Date 6/14/18
By Miami Dade Product Control

ALUMINUM AND STEEL REINFORCING AT INTERLOCK AND ASTRAGAL STILES
SHOWN FOR ILLUSTRATION ONLY.
USE AS SHOWN ON SHEET 3.
SEE CHARTS FOR REINFORCING OPTIONS LOAD CAPACITY, INCLUDING GLASS OPTIONS.
SEE ELEVATION FOR ANCHOR SPACING AND SHEET 5 FOR ANCHOR CAPACITY.

Engr: JAVAD AHMAD
CIVIL
FLA. PE # 70592
C.A.N. 3538

MAR 9 2015

AL-FAROOQ CORPORATION
ENGINEERS & PRODUCT DEVELOPMENT
1235 S.W. 87 AVE
MIAMI, FLORIDA 33174
TEL (305) 264-8100 FAX. (305) 262-6978

COMP-ANL\W07-26ES

SERIES-6100 ALUM SLIDING GLASS DOOR (S.M.I.)

E.S. WINDOWS, LLC
5220 N.W. 72 AVE. BAY #4
MIAMI, FL. 33166
TEL. (305) 624-7777 FAX. (305) 624-7777

revisions:

no	date	by	description
E	07.29.11		NO CHANGE THIS SHEET
F	10.03.11		NO CHANGE THIS SHEET
G	06.18.12		REV. PER PERA COMMENTS
H	10.01.13		NO CHANGE THIS SHEET
I	03.06.14		REV. PER RER COMMENTS

date: 04-04-07
scale: 1/2" = 1"
dr. by: HAMID
chk. by:

drawing no.
W07-26

ITEM #	PART #	QUANTITY	DESCRIPTION	MATERIAL	MANF./SUPPLIER/REMARKS
1	ES6001	1	FRAME HEAD	6005-T5	-
2	ES6023	1	FRAME SILL - 3-1/2" HIGH	6005-T5	-
3	ES6003	2	FRAME JAMB	6063-T6	-
3A	ES6030	2	ALTERNATE FRAME JAMB	6063-T6	-
4	ES6004	2/ PANEL	TOP RAIL	6063-T6	-
5	ES6005	2/ PANEL	BOTTOM RAIL	6063-T6	-
6	ES6006	AS REQD.	LOCK STILE	6063-T6	-
7	ES6007	AS REQD.	INTERLOCK	6063-T6	-
8	ES6008	AS REQD.	FEMALE ASTRAGAL	6063-T6	-
11	ES6016	4/ PANEL	PANEL GUIDE (TOP ONLY)	CELCON	-
12	ES6015	2/ PANEL	FIXED PANEL BOTTOM GUIDE	6063-T6	SECURE W/ (2) #8 X 3/4" FH SMS
13	ES6010	2/ PANEL	RETAINER CLIP, 6" LONG	6005-T5	AT MTG. RAIL HEAD & SILL ENDS
14	ES6011	2/ JAMB	JAMB SCREW COVER	6063-T5	OPTIONAL
15	ES6014	3/ FIX. PANEL	FIXED PANEL CLIP, 4" LONG, AT 53" O.C.	6063-T6	AT 7" FROM EACH END AND AT MIDSPAN
16	ES6012	AS REQD.	INTERLOCK STIFFENER (LENGTH = PANEL HT. - 2-3/8")	6063-T6	-
17	ES6013	AS REQD.	ASTRAGAL STIFFENER (LENGTH = PANEL HT. - 2-3/8")	6063-T6	-
18	1" X 2" X 3/16"	AS REQD.	STEEL TUBE REINFORCING (LENGTH = PANEL HT. - 2-3/8")	A36 STEEL	TO BE PAINTED
21	W222521K	AS REQD.	STILE & JAMB W'STRIPPING	-	ULTRAFAB
22	W223221K	AS REQD.	TOP RAIL W'STRIPPING	-	ULTRAFAB
23	ES6027	AS REQD.	BOTTOM RAIL W'STRIPPING	EPDM	DUROMETER 75±4 SHORE A
24	#10 X 1-1/2" PH SMS	8/ PANEL	PANEL ASSY SCREWS	-	-
25	#10 X 1" PH SMS	2/ CORNER	FRAME ASSY SCREWS	-	-
26	-	2/ MOV. PANEL	TANDEM ACETAL WHEELS IN METALLIC HOUSING	-	-
27	1/4-20 X 1-3/4" PH MS	1/ ROLLER	ROLLER INST. SCREWS	-	-
28	2300-10SS	1/ MOV. PANEL	STD. MORTISE LOCK, AT 48-1/2" FROM BOTTOM	ST. STEEL	-
28A	2468T-00	1/ MOV. PANEL	MULTI POINT MORTISE LOCK, AT 48-1/2" FROM BOTTOM	ST. STEEL	WITH 2448 TRIM PLATE
29	#10-24 X 3/8" PH MS	2/ LOCK	LOCK INSTALLATION SCREW	ST. STEEL	-
30	ES6017-1	1/ LOCK	LOCK KEEPER (STD. LOCK)	PLATED STEEL	AT 48-1/2" FROM BOTTOM
30A	2447-00	1/ LOCK	LOCK KEEPER (MULTI POINT LOCK)	ST. STEEL	AT 48-1/2" FROM BOTTOM
31	#10 X 5/8" PH SMS B	2/ LOCK	LOCK KEEPER MOUNT. SCREW (STD. LOCK)	ST. STEEL	-
31A	#8 X 3/4" FH SMS	4/ LOCK	LOCK KEEPER MOUNT. SCREW (MULTI POINT LOCK)	ST. STEEL	-
32	#623Z	1/ LOCK	INTERIOR AND EXTERIOR PULL	-	(3) #6-32 X 1/2" FH MS, ST. STEEL
34	#10 X 3/4" PH SDS	2/ CLIP	FIXED PANEL CLIP FASTENER	ST. STEEL	-
34A	#10 X 3/4" PH SDS	2/ CLIP	FIXED PANEL CLIP FASTENER	ST. STEEL	-
35	-	AS REQD.	1"X4" LONG SELF ADHESIVE PILE PAD	WOOLPILE	AT HEAD AND SILL
37	ES6019	AS REQD.	RESTRAINING PLATE	NYLON	AT TOP & BOTT. INTERLOCKS & ASTRAGAL
38	#8 X 3/4" FH SMS	2/ PLATE	RESTRAINING PLATE FASTENER	-	-
40	27-445	AS REQD.	GLAZING WEDGE GASKET	EPDM	DUROMETER 75±5 SHORE A, SOLUCIONESENCAUCHO
41	ES4014	AS REQD.	BOTTOM RAIL GLASS STOP	EPDM	DUROMETER 68±4 SHORE A
42	ES4018	AS REQD.	TOP RAIL & STILES GLASS STOP	EPDM	DUROMETER 75±4 SHORE A
43	-	AS REQD.	BUMPER	SILICONE	-
44	-	2/ LITE	SETTING BLOCK, 1" X 1/8" X 2-1/2" LONG	EPDM	DUROMETER 75±4 SHORE A

LATCHES:
ITEMS 28A AND 30A USED FOR DOORS WITH STEEL REINFORCING ONLY
ITEMS 28 AND 30 USED FOR ALL OTHER DOORS.

PRODUCT REVISED
as complying with the Florida Building Code
Acceptance No 13-1008.04
Expiration Date 6/10/15
By [illegible]
Miami-Dade Product Control

Engr: JAVAD AHMAD
CIVIL
FLA. PE # 70592
C.A.N. 3538

MAY 0 2015

AL-FAROOQ CORPORATION
ENGINEERS & PRODUCT DEVELOPMENT
1235 S.W. 87 AVE
MIAMI, FLORIDA 33174
TEL. (305) 264-8100 FAX. (305) 262-6978

COMP-ANL\W07-26ES

SERIES-6100 ALUM SLIDING GLASS DOOR (S.M.I.)

E.S. WINDOWS, LLC
5220 N.W. 72 AVE. BAY #4
MIAMI, FL. 33166
TEL. (305) 624-7775 FAX. (305) 624-7777

revisions:

no	date	by	description
E	07.29.11		ALT. JAMB ADDED
F	10.03.11		NO CHANGE THIS SHEET
G	06.18.12		REV. PER PERA COMMENTS
H	10.01.13		FRAME SILL REVISED
I	03.06.14		REV. PER RER COMMENTS

date: 04-04-07
scale: 1/2" = 1"
dr. by: HAMID
chk. by:

drawing no.
W07-26

sheet 10 of 12

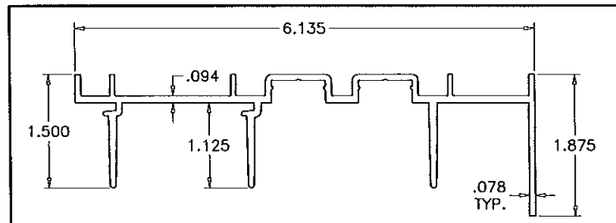

1 FRAME HEAD

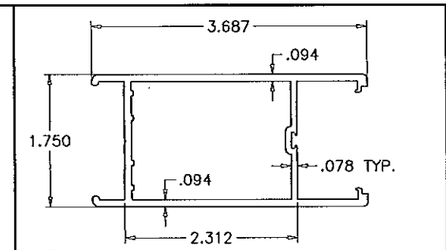

6 LOCK STILE

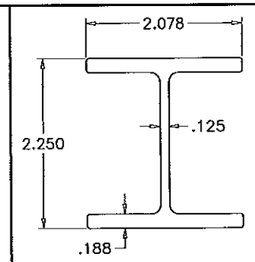

17 ASTRAGAL STIFFENER

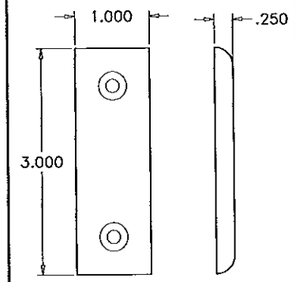

37 RESTRAINING PLATE

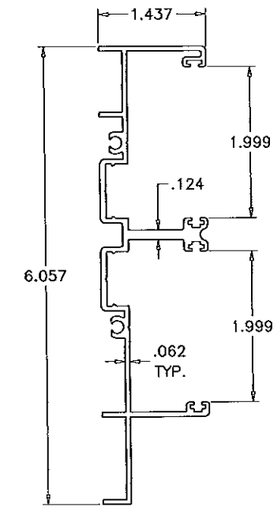

3A ALT. FRAME JAMB

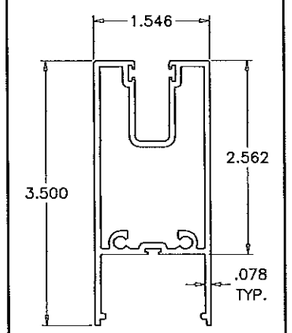

4 PANEL TOP RAIL

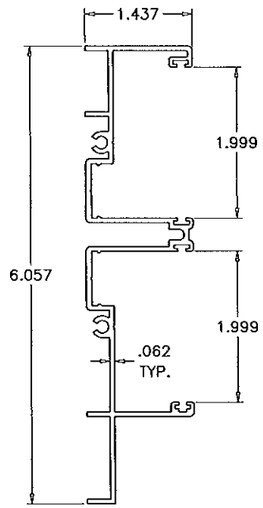

3 FRAME JAMB

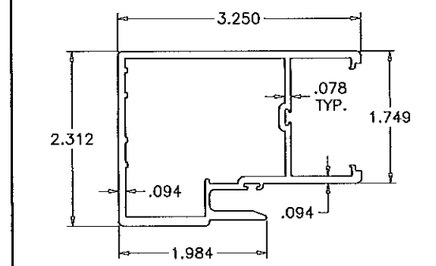

7 INTERLOCK STILE

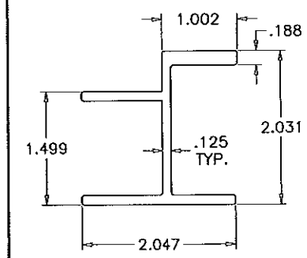

16 INTERLOCK STIFFENER

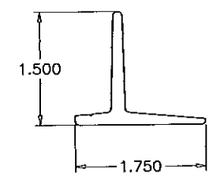

13 RETAINER CLIP

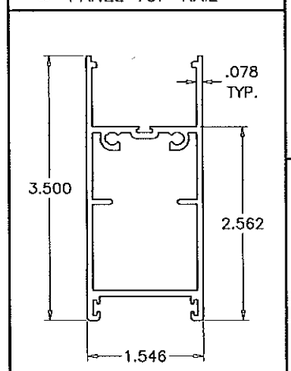

5 PANEL BOTTOM RAIL

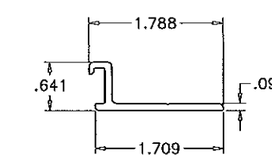

15 FIXED PANEL CLIP

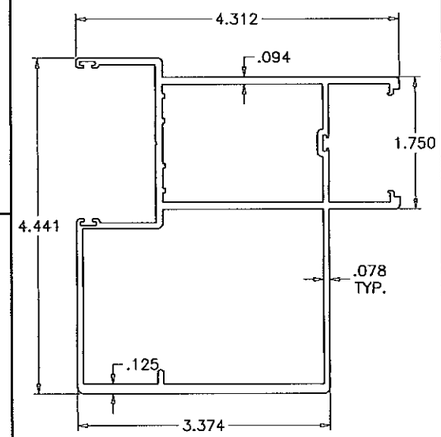

8 ASTRAGAL STILE

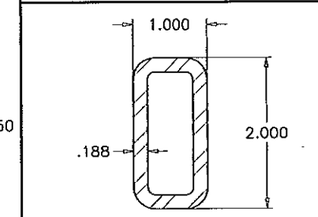

18 INTERLOCK REINFORCING

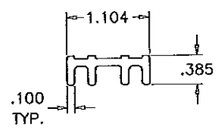

12 FIX. PANEL BOTTOM GUIDE

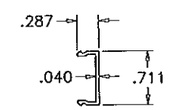

14 SCREW COVER

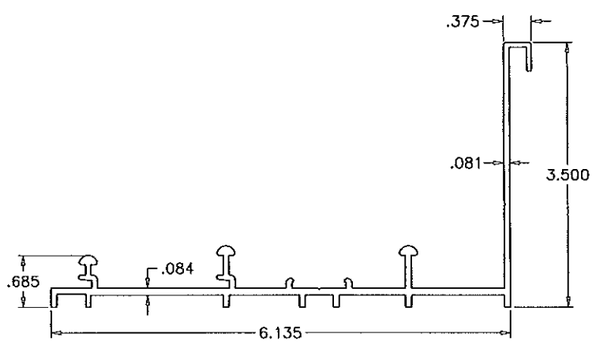

2 FRAME SILL

PRODUCT REVISED
as complying with the Florida
Building Code
Acceptance No. 13-1008.04
Expiration Date 6/14/18
By [signature]
Miami Dade Product Control

Engr: JAVAD AHMAD
CIVIL
FLA. PE # 70592
C.A.N. 3538
MAR 20 2014

AL-FAROOQ CORPORATION
ENGINEERS & PRODUCT DEVELOPMENT
1235 S.W. 87 AVE
MIAMI, FLORIDA 33174
TEL (305) 264-8100 FAX. (305) 262-6978

COMP-ANL\W07-26ES

SERIES-6100 ALUM SLIDING GLASS DOOR (S.M.I.)

E.S. WINDOWS, LLC
5220 N.W. 72 AVE. BAY #4
MIAMI, FL. 33166
TEL. (305) 624-7775 FAX. (305) 624-7777

revisions:

no	date	by	description
E	07.29.11		ALT. JAMB ADDED
F	10.03.11		NO CHANGE THIS SHEET
G	06.18.12		REV. PER PERA COMMENTS
H	10.01.13		FRAME SILL REVISED
I	03.06.14		REV. PER RER COMMENTS

date: 04-04-07
scale: 1/2" = 1"
dr. by: HAMID
chk. by:

drawing no.
W07-26

sheet 11 of 12

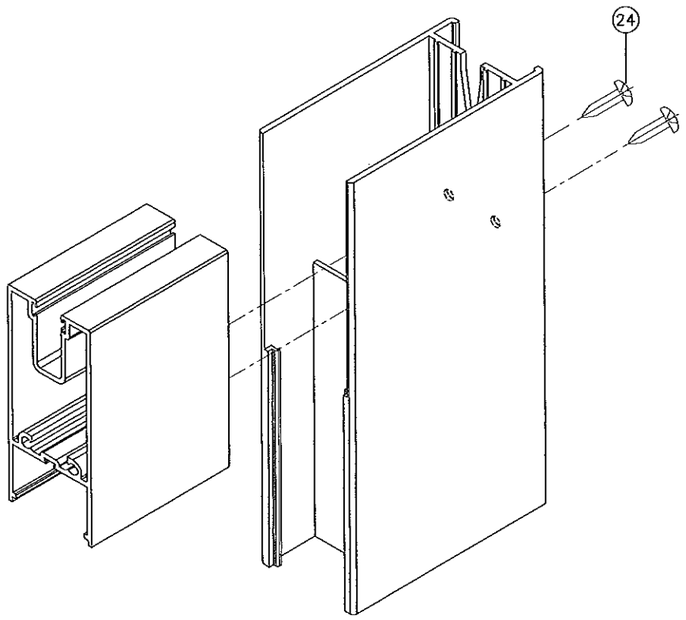

PANEL TOP CORNER

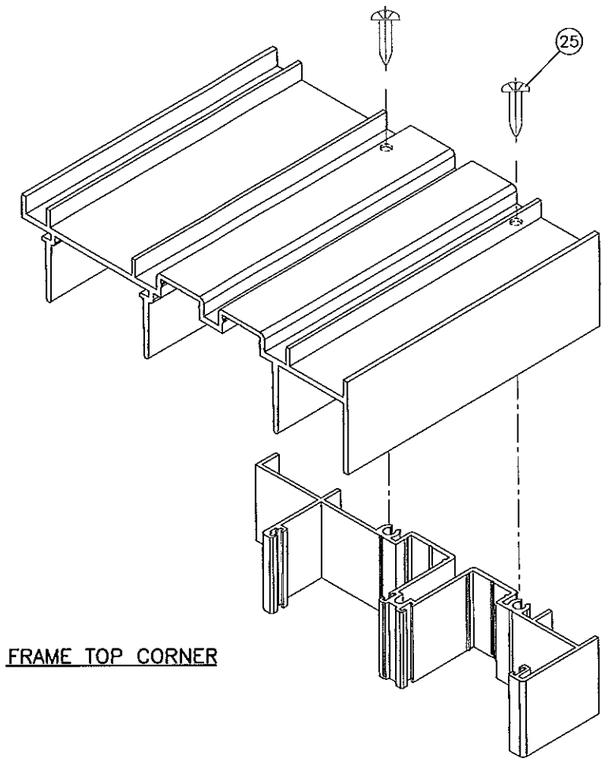

FRAME TOP CORNER

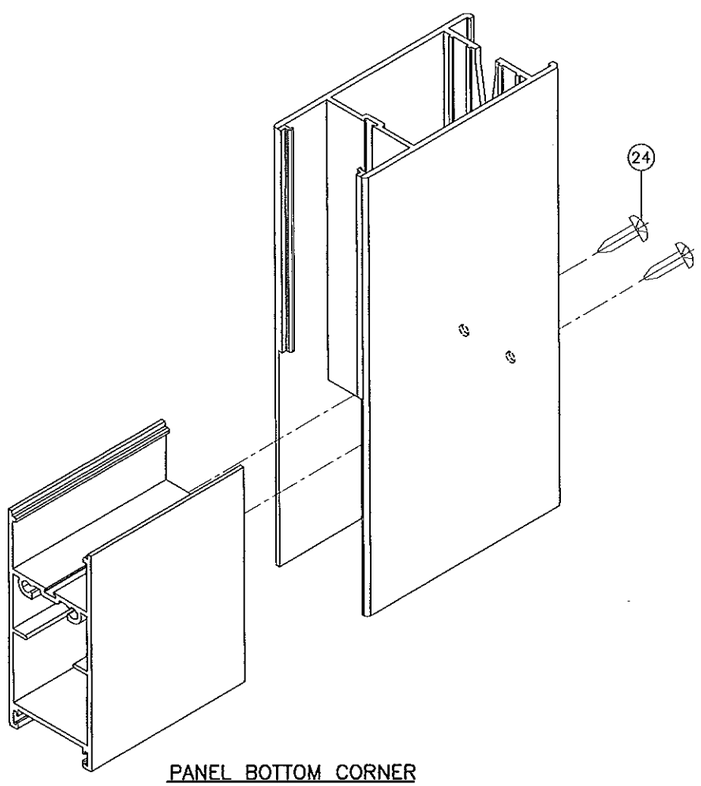

PANEL BOTTOM CORNER

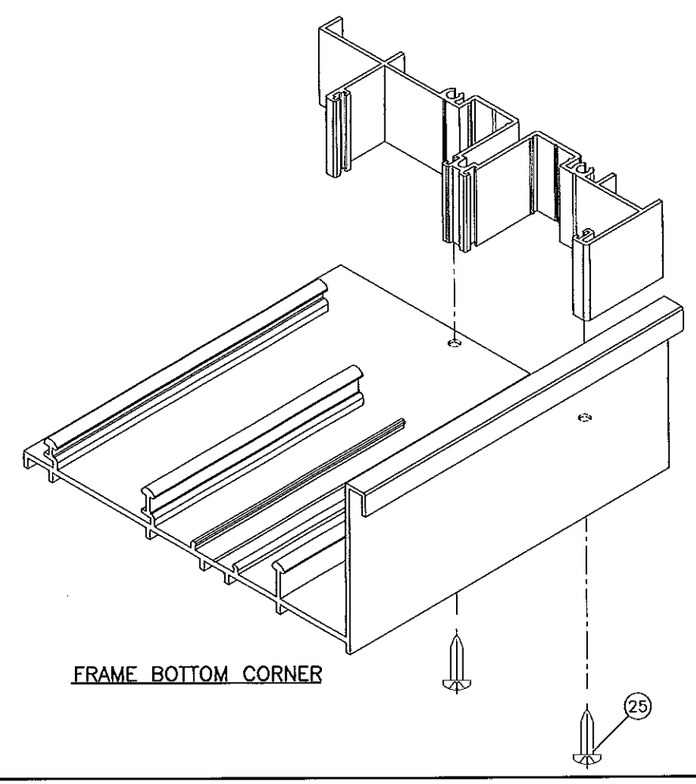

FRAME BOTTOM CORNER

PRODUCT REVISED
as complying with the Florida
Building Code
Acceptance No. 13-1008.04
Expiration Date June 14, 2015
By [illegible]
[redacted]

Engr: JAVAD AHMAD
CIVIL
FLA. PE # 70592
C.A.N. 3538

JAVAD AHMAD 2014

AL-FAROOQ CORPORATION
ENGINEERS & PRODUCT DEVELOPMENT
1235 S.W. 87 AVE
MIAMI, FLORIDA 33174
TEL. (305) 264-8100 FAX. (305) 262-6978

COMP-ANL\W07-26ES

SERIES-6100 ALUM SLIDING GLASS DOOR (S.M.I.)

E.S. WINDOWS, LLC
5220 N.W. 72 AVE. BAY #4
MIAMI, FL. 33166
TEL. (305) 624-7775 FAX. (305) 624-7777

revisions:

no	date	by	description
E	07.29.11		NO CHANGE THIS SHEET
F	10.03.11		NO CHANGE THIS SHEET
G	06.18.12		REV. PER PERA COMMENTS
H	10.01.13		NO CHANGE THIS SHEET
I	03.06.14		NO CHANGE THIS SHEET

date: 04-04-07
scale: 1/2" = 1"
dr. by: HAMID
chk. by:

drawing no.
W07-26

sheet 12 of 12