MIAMI-DADE COUNTY
DEPARTMENT OF REGULATORY AND ECONOMIC RESOURCES (RER)
BOARD AND CODE ADMINISTRATION DIVISION

MIAMI-DADE COUNTY
PRODUCT CONTROL SECTION
11805 SW 26 Street, Room 208
Miami, Florida 33175-2474
T (786) 315-2590 F (786) 315-2599
www.miamidade.gov/economy

NOTICE OF ACCEPTANCE (NOA)

Protech Screen, Inc.
P.O. Box 1710
Pearland, Texas 77588

SCOPE:
This NOA is being issued under the applicable rules and regulations governing the use of construction materials. The documentation submitted has been reviewed and accepted by Miami-Dade County RER- Product Control Section to be used in Miami Dade County and other areas where allowed by the Authority Having Jurisdiction (AHJ).

This NOA shall not be valid after the expiration date stated below. The Miami-Dade County Product Control Section (In Miami Dade County) and/or the AHJ (in areas other than Miami Dade County) reserve the right to have this product or material tested for quality assurance purposes. If this product or material fails to perform in the accepted manner, the manufacturer will incur the expense of such testing and the AHJ may immediately revoke, modify, or suspend the use of such product or material within their jurisdiction. RER reserves the right to revoke this acceptance, if it is determined by Miami-Dade County Product Control Section that this product or material fails to meet the requirements of the applicable building code.

This product is approved as described herein, and has been designed to comply with the High Velocity Hurricane Zone of the Florida Building Code.

DESCRIPTION: Series "D" Operable Hurricane Screen

APPROVAL DOCUMENT: Drawing No. 12-098, titled " Series "D" Operable Hurricane Screen ", sheets 1 through 3 of 3, prepared by EngCo., Inc., dated May 17, 2012, signed & sealed by Pedro De Figueiredo, P.E., on May 23, 2012, bearing the Miami-Dade County Product Control Renewal stamp with the Notice of Acceptance number and the expiration date by the Miami-Dade County Product Control Section.

MISSILE IMPACT RATING: Large and Small Missile Impact Resistant

LABELING: Each panel shall bear a permanent label with the manufacturer's name or logo, city, state and the following statement: "Miami-Dade County Product Control Approved", unless otherwise noted herein.

RENEWAL of this NOA shall be considered after a renewal application has been filed and there has been no change in the applicable building code negatively affecting the performance of this product.

TERMINATION of this NOA will occur after the expiration date or if there has been a revision or change in the materials, use, and/or manufacture of the product or process. Misuse of this NOA as an endorsement of any product, for sales, advertising or any other purposes shall automatically terminate this NOA. Failure to comply with any section of this NOA shall be cause for termination and removal of NOA.

ADVERTISEMENT: The NOA number preceded by the words Miami-Dade County, Florida, and followed by the expiration date may be displayed in advertising literature. If any portion of the NOA is displayed, then it shall be done in its entirety.

INSPECTION: A copy of this entire NOA shall be provided to the user by the manufacturer or its distributors and shall be available for inspection at the job site at the request of the Building Official.

This NOA **renews NOA # 12-0625.14** and consists of this page 1, evidence submitted pages E-1 & E-2 as well as approval document mentioned above.
The submitted documentation was reviewed by **Helmy A. Makar, P.E., M.S.**

MIAMI-DADE COUNTY APPROVED

Helmy A. Makar
12/19/2013

NOA No. 13-1009.11
Expiration Date: 02/25/2019
Approval Date: 12/19/2013

Protech Screen, Inc.

NOTICE OF ACCEPTANCE: EVIDENCE SUBMITTED

1. EVIDENCE SUBMITTED UNDER PREVIOUS APPROVAL # 06-0515.03

A. DRAWINGS

1. *Drawing No. 06-119, titled " Series "D" Operable Hurricane Screen ", sheets 1 through 3 of 3, prepared by EngCo., Inc., dated April 17, 2006, signed & sealed by Pedro De Figueiredo, P.E., on May 10, 2006.*

B. TESTS

1. *Test report on Large Missile Impact Test, Cyclic Wind Pressure Test and Uniform Static Air Pressure Test of "D" Series Operable Impact Screen, prepared by Construction Consulting Laboratory, International, Report No. CCLI-05-159, dated November 03, 2005, signed and sealed by Abdol Rezadad, P.E.*

C. CALCULATIONS

1. *Storm panel calculations and anchor analysis, 8 sheets, by Engco, Inc., signed and sealed by Pedro De Figueiredo, P.E., on May 10, 2006.*

D. QUALITY ASSURANCE

1. *By Miami-Dade County Building Code Compliance Office.*

E. MATERIAL CERTIFICATIONS

1. *Die Drawing numbers 2950, 7372, 9809, 3782, 05-159, 3493, & 3735.*

2. EVIDENCE SUBMITTED UNDER PREVIOUS APPROVAL # 12-0625.14

A. DRAWINGS

1. *Drawing No. 12-098, titled " Series "D" Operable Hurricane Screen ", sheets 1 through 3 of 3, prepared by EngCo., Inc., dated May 17, 2012, signed & sealed by Pedro De Figueiredo, P.E., on May 23, 2012.*

B. TESTS

1. *None.*

C. CALCULATIONS

1. *None.*

D. QUALITY ASSURANCE

1. *By Miami-Dade County Department of Regulatory and Economic Resources.*

E. MATERIAL CERTIFICATIONS

1. *None.*

Helmy A. Makar, P.E., M.S.
Product Control Unit Supervisor
NOA No. 13-1009.11
Expiration Date: 02/25/2019
Approval Date: 12/19/2013

NOTICE OF ACCEPTANCE: EVIDENCE SUBMITTED

3. NEW EVIDENCE SUBMITTED

A. DRAWINGS

1. None.

B. TESTS

1. None.

C. CALCULATIONS

1. None.

D. QUALITY ASSURANCE

1. By Miami-Dade County Department of Regulatory and Economic Resources.

E. MATERIAL CERTIFICATIONS

1. None.

Helmy A. Makar, P.E., M.S.
Product Control Unit Supervisor
NOA No. 13-1009.11
Expiration Date: 02/25/2019
Approval Date: 12/19/2013

SERIES D

OPERABLE HURRICANE SCREEN
LARGE AND SMALL IMPACT RESISTANT
ALLOWABLE PRESSURE: +69, -56 PSF

GENERAL NOTES:

1- CODE: FLORIDA BUILDING CODE 2010 - HVHZ.

2- TEST COMPLIANCE: TAS 201, TAS 202 AND TAS 203

3- PRODUCT DESCRIPTION: THIS PRODUCT IS A HURRICANE SHUTTER DEVICE COMPOSED OF AN OPERABLE HURRICANE SCREEN

4- LABEL: A PERMANENT LEGIBLE LABEL SHALL BE PLACED ON EACH UNIT AT A VISIBLE LOCATION STATING THE FOLLOWING:

"SERIES D OPERABLE SCREEN SHUTTER
PROTECH SCREEN, INC. - PEARLAND, TEXAS
MIAMI-DADE COUNTY PRODUCT CONTROL APPROVED"

5- MATERIAL:
5.1- SCREEN MESH MADE OF 0.028" STAINLEES STEEL 304 GRADE.
5.2- ALL ALUMINUM EXTRUSIONS SHALL BE MADE WITH 6063-T5 ALLOY OR AS INDICATED IN THIS DRAWING.
5.3- FASTENERS: ASSEMBLY SCREWS AND ANCHORS SHALL BE AS SPECIFIED BY THE CURRENT SET OF DRAWINGS. INSTALLATION AND LOADS AS PER THIS APPROVAL. ANCHOR EMBEDMENT TO BASE MATERIAL SHALL BE BEYOND WALL DRESSING.

6- LOADS: A PROJECT DESIGN PRESSURES, DETERMINED FROM SECTION 1620 AND ASCE 7-10, SHALL BE PROVIDED BY A PROFESSIONAL ARCHITECT OR ENGINEER. THE PRESSURES MUST BE MULTIPLIED BY 0.6 FACTOR AND MUST NOT EXCEED THE PRODUCT ALLOWABLE PRESSURES HERE IN SPECIFIED.

7- THE CONTRACTOR MUST VERIFY THE ADEQUACY OF THE EXISTING STRUCTURE IN SUSTAINING THE PRODUCT IMPOSED LOADS.

8- MATERIALS, INCLUDING BUT NOT LIMITED TO STEEL/ METAL SCREWS, THAT COME INTO CONTACT WITH OTHER DISSIMILAR MATERIALS SHALL MEET THE REQUIREMENTS OF 2010 FBC SECTION 2003.8.4.

9- 33 1/3% INCREASE IN ALLOWABLE STRESS HAS NOT BEEN USED IN THE DESIGN OF THIS PRODUCT. ANCHORS INTO WOOD WERE DESIGNED WITH 1.6 LOAD DURATION.

10- HARDWARE:
10.1- MID POINT LOCK: WARTIAN 1850 ATTACHED BY TWO #6X1 3/4" SCREWS AND ONE #8X 1 1/2" TEK SCREWS AT BOTTOM OF HANDLE.
10.2- 16" FROM EACH ENDS: WARTIAN A116-117 DEAD BOLT LOCK ATTACHED BY TWO #6X2 1/2" SCREWS

TABLE OF CONTENTS:

SHEET	CONTENTS
1	GENERAL NOTES, TABLE OF CONTENTS, TYPICAL ELEVATIONS ALLOWABLE DESIGNED PRESSURES
2	SECTIONS DETAILS
3	PRODUCT COMPONENTS, CORNER ASSEMBLY

TYPICAL ELEVATIONS

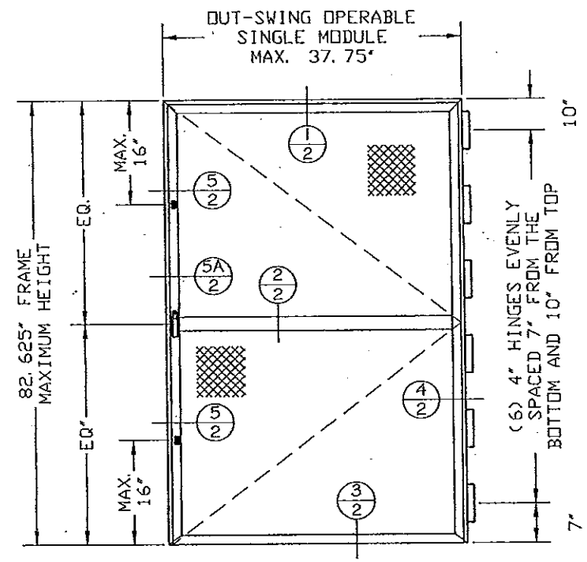

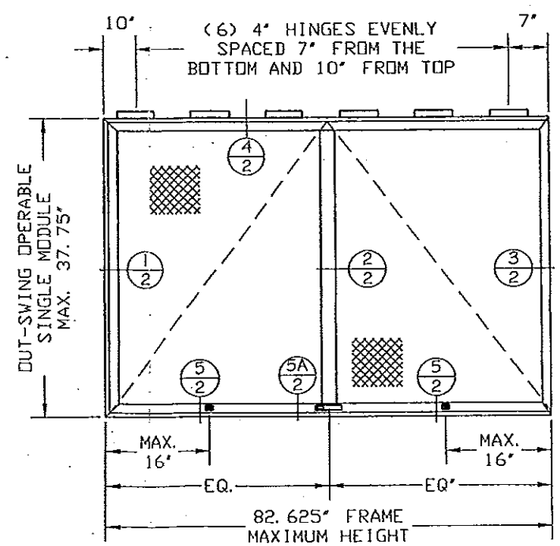

NOTES:

1- PRODUCT CAN BE INSTALLED ROTATED.
2- #12X.028 - 40% POROSITY (SCREEN)

PRODUCT RENEWED
as complying with the Florida Building Code
Acceptance No 13-1009.11
Expiration Date 02/25/2019
By
Miami Dade Product Control

MANUFACTURER:

PROTECH SCREENS, INC

2425 ROY ROAD
PEARLAND - TEXAS
PHONE: (281) 485-2300
FAX: (281) 485-8837

PRODUCT:

SERIES D
OPERABLE HURRICANE SCREEN
LARGE & SMALL MISSILE IMPACT RATED

ENGINEERING:

ENGCO INC. CA8116
5595 ORANGE DR. 201
DAVIE, FL. 33314
Tel.: (954) 585-0304
ENGCO@AOL.COM

PEDRO M. DE FIGUEIREDO
LICENSE
No 52609
STATE OF FLORIDA
PROFESSIONAL ENGINEER

MAY 23 2012
Engineer Seal
Pedro De Figueiredo - PE 52609

MIAMI-DADE BCCO:

PRODUCT REVISED
as complying with the Florida Building Code
Acceptance No 12-0625.14
Expiration Date 02/25/2014
By
Miami Dade Product Control

DATE: 05/17/2012
SCALE: NA
DESIGN BY: PPMF

SHEET	DRAWING #:
1 OF 3	12-098

TYPICAL SECTIONS

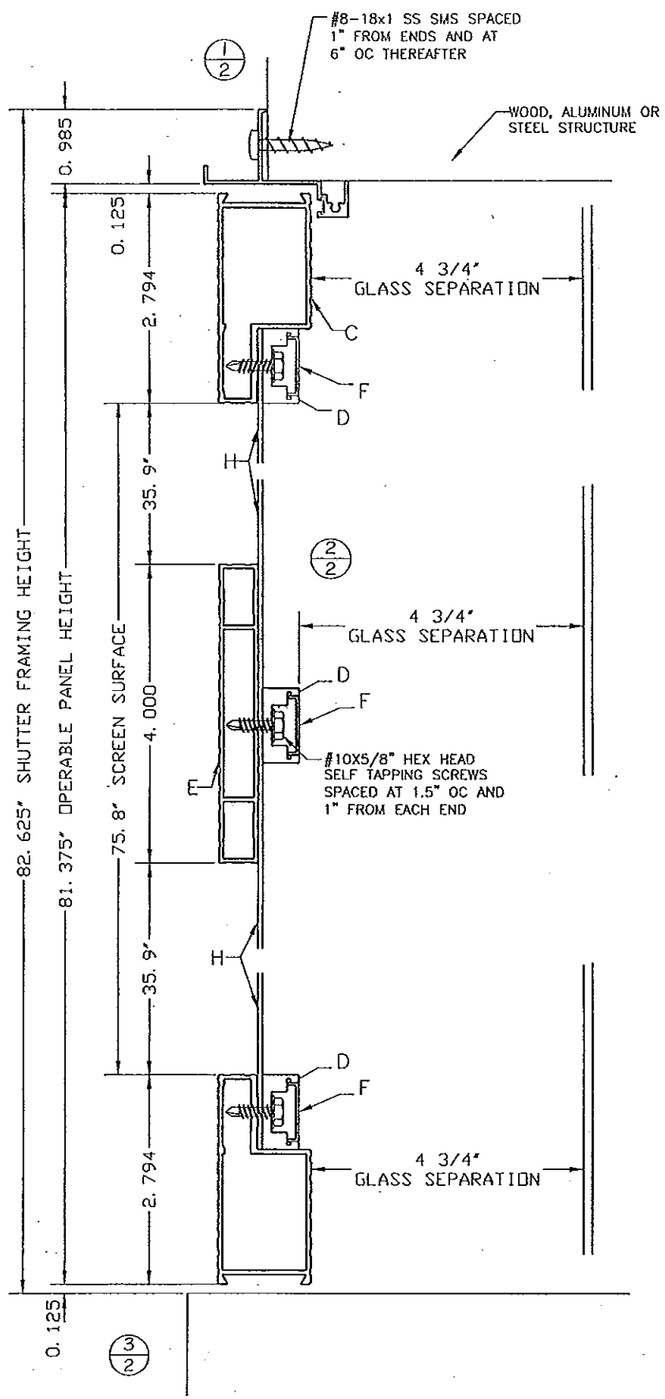

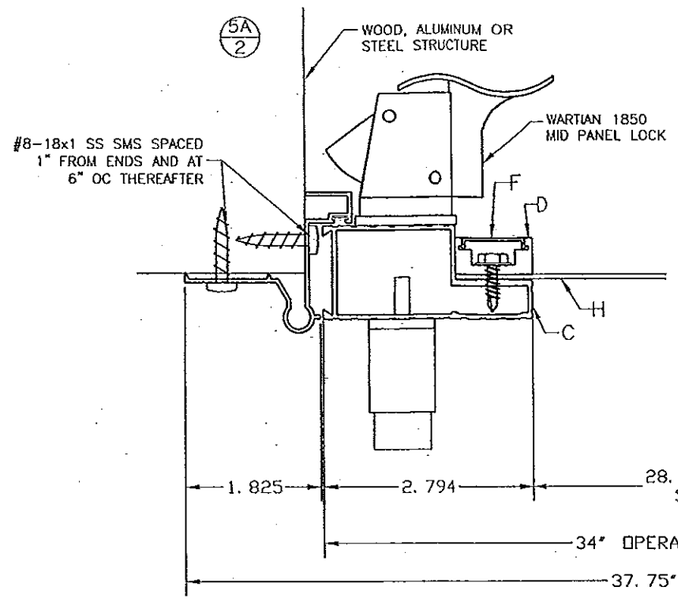

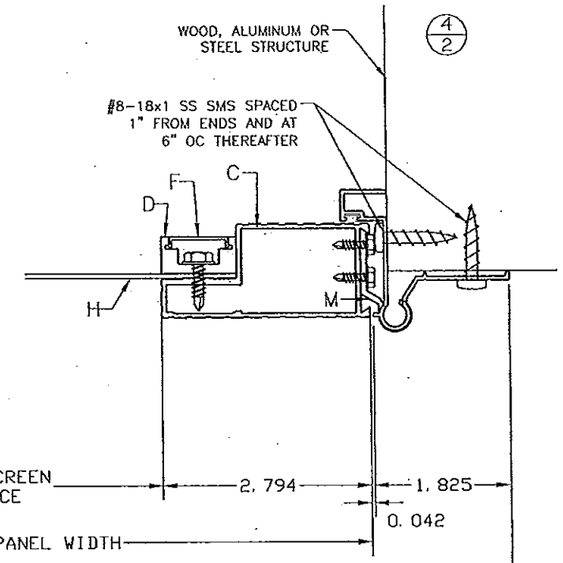

ANCHORS:

TYPE	DESCRIPTION	SUBSTRATUM	EMBED.	E. D.
A	#8-18X1" SS SMS	1/8" METAL	1/8"	1/2"
B	#8-18X1" SS SMS	WOOD WITH SG >=.55	7/8"	5/8"

EMB. - MINIMUM EMBEDMENT
E. D. - MINIMUM EDGE DISTANCE

PRODUCT RENEWED
as complying with the Florida
Building Code
Acceptance No 13-1009.11
Expiration Date 02/25/2019
By
Miami Dade Product Control

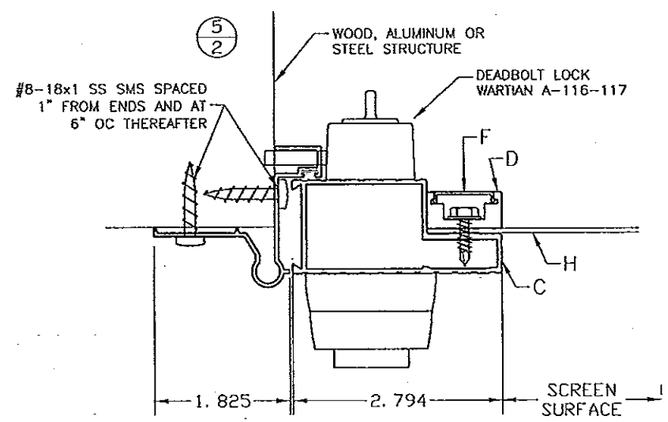

MANUFACTURER:

PROTECH
SCREENS, INC

2425 ROY ROAD
PEARLAND - TEXAS
PHONE: (281) 485-2300
FAX: (281) 485-8837

PRODUCT:

SERIES D
OPERABLE HURRICANE SCREEN
LARGE & SMALL MISSILE
IMPACT RATED

ENGINEERING:
ENGCO INC. CA8116
5595 ORANGE DR. 201
DAVIE, FL. 33314
Tel.: (954) 585-0304
ENGCO@AOL.COM

PEDRO M. DE FIGUEIREDO
LICENSE
No. 52609
STATE OF FLORIDA
PROFESSIONAL ENGINEER

MAY 23 2012
Engineer Seal
Pedro De Figueiredo - PE 52609

MIAMI-DADE BCCO:

PRODUCT REVISED
as complying with the Florida
Building Code
Acceptance No 12-0625.14
Expiration Date 02/25/2014
By
Miami Dade Product Control

DATE: 05/17/2012
SCALE: NA
DESIGN BY: PPMF

SHEET	DRAWING #:
2 OF 3	12-098

PRODUCT COMPONENTS

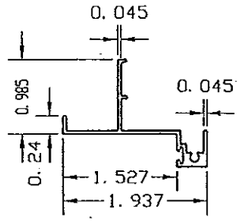

A- HEADER FRAMING
6063-T5

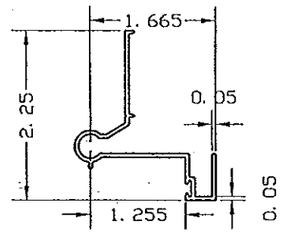

B- JAMB FRAMING
6063-T5

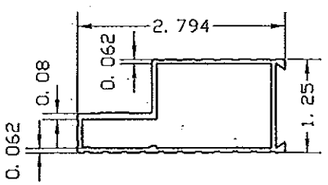

C- DOOR FRAMING
6063-T5

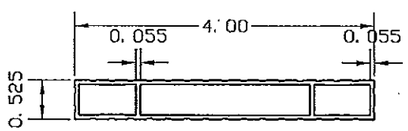

E- PUSH PLATE
6063-T5

REAR ELEVATION
TYPICAL SCREEN PANEL
ASSEMBLY SCREWS LAY-OUT

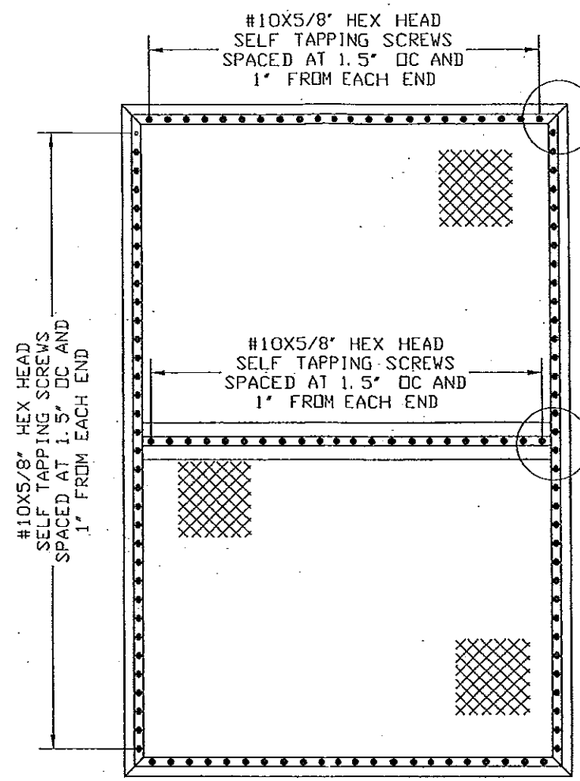

TYPICAL CORNER ASSEMBLY

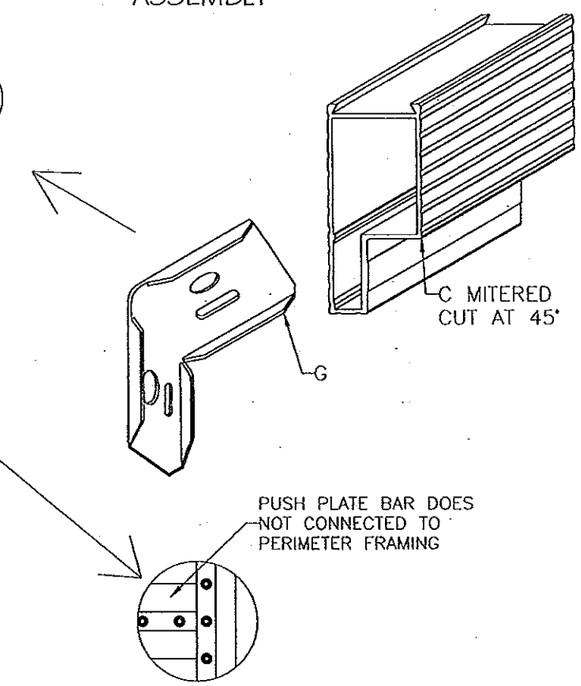

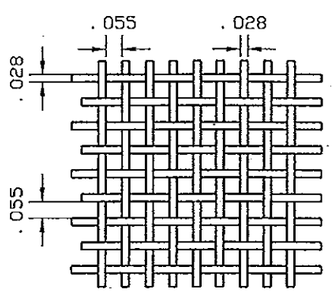

H- NXT 12 MESH
.028 Stainless Steel 304
SCREEN

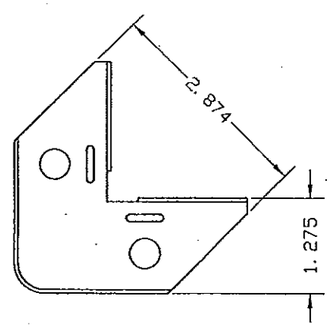

G- FRAME CORNER KEY
#390-0393
18ga/.05 GALV. STEEL

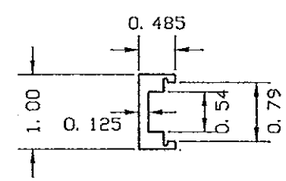

D- COVER STRIP V-CORNER
6063-T5

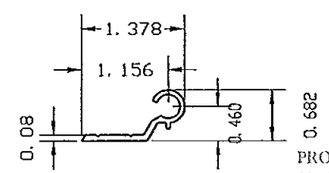

M- DOOR HINGE
6063-T5

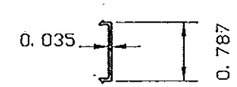

F- SCREW COVER
#1000244 BLK - PLASTIC

L- WEATHER STRIPPING
PILE FELT

PRODUCT RENEWED
as complying with the Florida
Building Code
Acceptance No 13-1009.11
Expiration Date 02/25/2019
By
Miami Dade Product Control

MANUFACTURER:

PROTECH
SCREENS, INC

2425 ROY ROAD
PEARLAND - TEXAS
PHONE: (281) 485-2300
FAX: (281) 485-8837

PRODUCT:

SERIES D
OPERABLE HURRICANE SCREEN
LARGE & SMALL MISSILE
IMPACT RATED

ENGINEERING:
ENGCO INC. CA 8116
5595 ORANGE DR. 201
DAVIE, FL. 33314
Tel.: (954) 585-0304
ENGCO@AOL.COM

PEDRO M. DE FIGUEIREDO
LICENSE
No. 52609
STATE OF
FLORIDA
PROFESSIONAL ENGINEER

MAY 23 2012

Engineer Seal
Pedro De Figueiredo - PE 52609

MIAMI-DADE BCCO:

PRODUCT REVISED
as complying with the Florida
Building Code
Acceptance No 12-0625.14
Expiration Date 02/25/2014
By
Miami Dade Product Control

DATE: 05/17/2012
SCALE: NA
DESIGN BY: PPMF

SHEET	DRAWING #:
3 OF 3	12-098