MIAMI-DADE COUNTY
PRODUCT CONTROL SECTION
11805 SW 26 Street, Room 208
Miami, Florida 33175-2474
T (786) 315-2590 F (786) 315-2599
www.miamidade.gov/economy

DEPARTMENT OF REGULATORY AND ECONOMIC RESOURCES (RER)
BOARD AND CODE ADMINISTRATION DIVISION

NOTICE OF ACCEPTANCE (NOA)

Arrow United Industries
450 Riverside Drive
Wyalusing, PA 18853

SCOPE:

This NOA is being issued under the applicable rules and regulations governing the use of construction materials. The documentation submitted has been reviewed and accepted by Miami-Dade County RER-Product Control Section to be used in Miami Dade County and other areas where allowed by the Authority Having Jurisdiction (AHJ).

This NOA shall not be valid after the expiration date stated below. The Miami-Dade County Product Control Section (In Miami Dade County) and/or the AHJ (in areas other than Miami Dade County) reserve the right to have this product or material tested for quality assurance purposes. If this product or material fails to perform in the accepted manner, the manufacturer will incur the expense of such testing and the AHJ may immediately revoke, modify, or suspend the use of such product or material within their jurisdiction. RER reserves the right to revoke this acceptance, if it is determined by Miami-Dade County Product Control Section that this product or material fails to meet the requirements of the applicable building code.

This product is approved as described herein, and has been designed to comply with the Florida Building Code, including the High Velocity Hurricane Zone.

DESCRIPTION: Model EA-64 6" Deep Aluminum Louver

APPROVAL DOCUMENT: Drawing No. **1464**, titled "EA-64 Louver System", sheets 1 through 15 of 15, dated 12/02/2005, with revision A1 dated 11/07/2011, prepared by W. W. Schaefer Engineering & Consulting, P.A., signed and sealed by Warren. W. Schaefer, P.E., bearing the Miami-Dade County Product Control renewal stamp with the Notice of Acceptance number and expiration date by the Miami-Dade County Product Control Section.

MISSILE IMPACT RATING: Large and Small Missile Impact Resistant

LABELING: Each unit shall bear a permanent label with the manufacturer's name or logo, city, state, model/series, and following statement: "Miami-Dade County Product Control Approved", unless otherwise noted herein.

RENEWAL of this NOA shall be considered after a renewal application has been filed and there has been no change in the applicable building code negatively affecting the performance of this product.

TERMINATION of this NOA will occur after the expiration date or if there has been a revision or change in the materials, use, and/or manufacture of the product or process. Misuse of this NOA as an endorsement of any product, for sales, advertising or any other purposes shall automatically terminate this NOA. Failure to comply with any section of this NOA shall be cause for termination and removal of NOA.

ADVERTISEMENT: The NOA number preceded by the words Miami-Dade County, Florida, and followed by the expiration date may be displayed in advertising literature. If any portion of the NOA is displayed, then it shall be done in its entirety.

INSPECTION: A copy of this entire NOA shall be provided to the user by the manufacturer or its distributors and shall be available for inspection at the job site at the request of the Building Official.

This NOA **renews NOA # 11-1117.09** and consists of this page 1 and evidence page E-1, as well as approval document mentioned above.

The submitted documentation was reviewed by **Carlos M. Utrera, P.E.**

MIAMI-DADE COUNTY APPROVED

12/24/2013

NOA No. 13-1017.04
Expiration Date: April 22, 2019
Approval Date: January 2, 2014

NOTICE OF ACCEPTANCE: EVIDENCE SUBMITTED

A. DRAWINGS ***"Submitted under NOA # 11-1117.09"***

1. Drawing No. **1464**, titled "EA-64 Louver System", sheets 1 through 15 of 15, dated 12/02/2005, with revision A1 dated 11/07/2011, prepared by W. W. Schaefer Engineering & Consulting, P.A., signed and sealed by Warren W. Schaefer, P.E.

B. TESTS ***"Submitted under NOA No. 08-1224.03"***

	Test Report	Test Standard	Test Date	Signature
1.	HTL 0198-0508-03	TAS 201,202 & 203	05/15-10/03	V.J.Abraham, P.E.
2.	HTL.0198-0618-03	TAS 201, 202 & 203	06/06-25/03	V.J.Abraham, P.E.
3.	HTL 0198-0804-03	TAS 201, 202 & 203	08/06-08/03	V.J.Abraham, P.E.
4.	HTL 0198-0508-03	TAS 201, 202 & 203	05/08-13/03	V.J.Abraham, P.E.
5.	HTL 0198-0804-03	TAS 201, 202 & 203	08/08-11/03	V.J.Abraham, P.E.
6.	HTL 0198-0324-03	TAS 201, 202 & 203	03/24-26/03	V.J.Abraham, P.E.
7.	HTL 0198-0324-03	TAS 201, 202 & 203	03/24-04/16	V.J.Abraham, P.E.
8.	HTL 0198-0324-03	TAS 201, 202 & 203	03/24-24/03	V.J.Abraham, P.E.
9.	HTL 0198-0324-03	TAS 201, 202 & 203	03/25-04/21	V.J.Abraham, P.E.
10.	HTL 0198-0128-03	TAS 201, 202 & 203	02/10-04/21	V.J.Abraham, P.E.
11.	HTL 0198-0508-03	TAS 202	05/13-13/03	V.J.Abraham, P.E.
12.	HTL 0198-0324-03	TAS 202	03/27-27/03	V.J.Abraham, P.E.
13.	HTL 0198-0324-03	TAS 201 & 203	03/24-04/21	V.J.Abraham, P.E.
14.	HTL G198-0101-05	TAS 201, 202 & 203	02/15/05	V.J.Abraham, P.E.
15.	AWV/AUI-011-02-01	TAS 100 (A)-95	05/13/08	Duc T. Nguyen, P.E.
16.	ATI 45720.03-122-18	TAS 100 (A)-95	01/16/09	J.A. Reed, P.E.

C. CALCULATIONS ***"Submitted under NOA No. 08-1224.03"***

1. Anchoring calculations prepared by W.W. Schaefer Engineering & Consulting, P.A., dated 12/17/2008, signed and sealed by Warren W. Schaefer, P.E.

D. QUALITY ASSURANCE

1. Miami-Dade Department of Regulatory and Economic Resources (RER)

E. MATERIAL CERTIFICATIONS

1. None.

F. STATEMENTS

1. Statement letter of code conformance to 2010 FBC issued by W. W. Schaefer Engineering & Consulting, P.A., dated 09/03/2013, signed and sealed by Warren W. Schaefer, P.E.
2. No financial interest letter issued by W. W. Schaefer Engineering & Consulting, P.A, dated 09/04/2013, signed and sealed by Warren W. Schaefer, P.E.

"Submitted under NOA No. 08-1224.03"

3. Test code compliance letters issued by Hurricane Test Laboratory, Inc., dated 09/23/2003 and 01/20/2009, signed and sealed by Vinu J. Abraham, P.E.

12/24/2013

Carlos M. Utrera, P.E.
Product Control Examiner
NOA No. 13-1017.04
Expiration Date: April 22, 2019
Approval Date: January 2, 2014

FASTENER SCHEDULE

ANCHOR TYPE	(5) SUBSTRATE	MINIMUM EMBEDMENT	MINIMUM EDGE DIST.
(3) NO. 10 S.S. SCREW	WOOD	1 3/8"	3/4"
(6) NO. 10 SELF TAP SCREW	METAL STUD OR STEEL	FULL	3/4"
(1) 1/4" CONCRETE SCREW	C90 CONCR. BLOCK	1 1/4"	2 1/2"
(1) 1/4" CONCRETE SCREW	CONCRETE	1 1/2"	2"
(2) 1/4" BOLT	STEEL OR METAL STUD	FULL	3/4"
(4) 3/8" SLEEVE ANCHOR	CONCRETE	2 1/2"	2 1/2"
(2) 3/8" BOLT	STEEL	FULL	3/4"

(1) CONCRETE SCREWS SHALL BE ELCO ULTRACONS OR HILTI KWIK-CON II. (HARDENED STEEL OR S.S.
(2) BOLT SHALL BE MIN. A307 GALVANIZED OR 304 S.S. (Fv = 10,000 PSI MIN.)
(3) WOOD SCREWS SHALL HAVE MIN. YIELD STRENGTH OF Fyb = 80,000 PSI
(4) SLEEVE ANCHORS MAY BE GALVANIZED OR S.S. RAMSET RED HEAD DYNABOLTS OR POWERS RAWL POWER BOLT.
(5) SEE GENERAL NOTES FOR SUBSTRATE REQUIREMENTS.
(6) SELF TAPPING SCREWS SHALL BE CORROSION RESISTANT MIN. SAE GRADE 2 STEEL OR MIN. ALLOY GROUP 1, 2 & 3 CONDITION "A" STAINLESS STEEL.

CORNER & BLADE END CONSTRUCTION

BLADE TO JAMB:
WELDED CONDITION: BLADE END BUTTS TO JAMB, IS WELDED WITH ONE 1/8" X 5" WELD AND SCREWED TO JAMB WITH WITH 2 NO. 8 X 3/4" S.S. SMS SCREWS THROUGH JAMB AND INTO BLADE SCREW SPLINES.
SCREWED CONDITION: BLADE END BUTTS TO JAMB & IS SCREWED TO JAMB WITH TWO (2) 1/4-20 X 1 1/2" TYPE "F" SCREWS THROUGH JAMB AND INTO BLADE SCREW SPLINES.
HEAD TO JAMB: HEAD FRAME IS SQUARE CUT, BUTTED AND JOINED TO JAMB WITH ONE 1/8" X 5" WELD AND 2 NO. 8 X 3/4" S.S. SMS SCREWS THROUGH JAMB AND INTO HEADER SCREW SPLINES.
SILL TO JAMB: SIDE JAMB BUTTS TO SILL AND IS JOINED TO SILL WITH THREE(3) 1/8" X 1" WELDS AND 2 NO. 8 X 3/4" S.S. SMS SCREWS THROUGH SILL AND INTO JAMB SCREW SPLINES.

GENERAL NOTES:

1. IT SHALL BE THE RESPONSIBILITY OF THE PERMIT HOLDER TO VERIFY THE STRUCTURAL INTEGRITY OF THE EXISTING STRUCTURE TO SUPPORT THE LOADS SUPERIMPOSED BY THE LOUVERS.
2. THESE LOUVER SYSTEMS HAVE BEEN DESIGNED & TESTED IN ACCORDANCE WITH THE FLORIDA BUILDING CODE (FBC) AND PROTOCOLS TAS-100, 201, 202 & 203 INCLUDING HIGH VELOCITY HURRICANE ZONES (HVHZ).
3. EACH LOUVER ASSEMBLY SHALL BE PERMANENTLY LABELED AS FOLLOWS: ARROW UNITED INDUSTRIES
   WYALUSING, PA
   MIAMI-DADE COUNTY PRODUCT CONTROL APPROVED
4. ALL CONCRETE SUBSTRATE SHALL BE MIN. 3000 PSI.
5. ALL WOOD SUBSTRATE SHALL BE MIN. G = 0.55 DENSITY.
6. ALL METAL STUD SUBSTRATE SHALL BE MIN. 16 GA. Fy = 33 ksi.
7. ALL STRUCTURAL STEEL SUBSTRATE SHALL BE MIN. 12 GA. Fy = 36 ksi.
8. PANEL WIDTHS & HEIGHTS ARE LIMITED AS SHOWN IN ELEVATIONS.
9. MULLED PANELS MAY BE HORIZONTALLY INSTALLED TO AN UNLIMITED NUMBER. VERTICAL STACKING OF MULLED PANELS MAY OCCUR PROVIDING A STRUCTURAL SUPPORT IS DESIGNED & INSTALLED BY OTHERS TO SUPPORT ALL LOADS TRANSFERED FROM THE LOUVER ASSEMBLY (SINGLE PANELS MAY RUN TO UNLIMITED HEIGHT PER ELEVATION IF NO MULLION EXISTS).
10. MATERIALS, INCLUDING BUT NOT LIMITED TO STEEL SCREWS, THAT COME INTO CONTACT WITH OTHER DISSIMILAR MATERIALS SHALL MEET THE REQUIREMENTS OF FLORIDA BUILDING CODE CHAPTER 20.
11. THIS SYSTEM HAS BEEN TESTED FOR WATER INFILTRATION RESISTANCE AND IS A WATER RESISTANT SYSTEM WHEN THE LOUVER BLADE ENDS ARE SCREWED & WELDED AND THE DAMPER BLADE IS ATTACHED TO THE LOUVER BLADES AS SHOWN IN SECTION "A2/4" (NOT RATED FOR WATER RESISTANCE WHEN LOUVER BLADE ENDS ARE SCREW CONNECTED ONLY). THIS SYSTEM IS ALSO A WATER RESISTANT SYSTEM WHEN THE AFD-20 DAMPER IS PLACED BEHIND THE LOUVER.
12. UNLESS THE DAMPER BLADE IS ATTACHED TO THE LOUVER BLADES OR THE AFD-20 DAMPER IS PLACED BEHIND THE LOUVER, THE LOUVER IS TO BE INSTALLED IN A LOCATION WHERE THE ROOM BEHIND THE LOUVER IS DESIGNED TO DRAIN WATER PENETRATING INTO THE ROOM, AND THE ROOM WILL HOUSE WATER RESISTANT/WATER PROOF EQUIPMENT, COMPONENTS OR SUPPLIES.
13. ALL DETAILS OF SHEETS 10 THRU 15 MUST COMPLY WITH THE LOUVER DETAILS SHOWN ON SHEETS 1 THRU 9. ANY DISCREPANCY IS CONTROLLED BY THE DETAILS ON SHEETS 1 THRU 9.

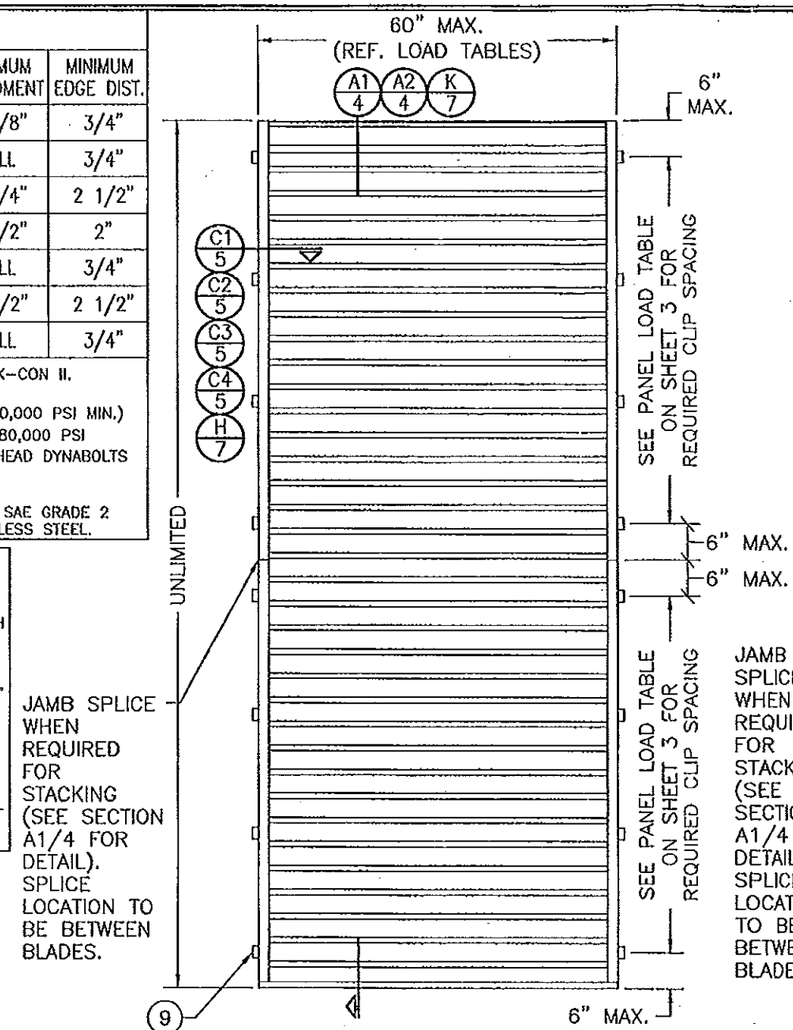

EXTERIOR ELEVATION
SINGLE LOUVER PANEL WITHOUT BLADE SUPPORT ANGLE

NOTE: LOUVER PANELS MAY BE STACKED/SPLICED VERTICALLY OR THE LOUVER PANEL MAY RUN VERTICALLY TO INFINITE HEIGHT PROVIDING OPENING IS PROPERLY DESIGNED BY OTHERS TO SUPPORT THE LOUVER PANELS.

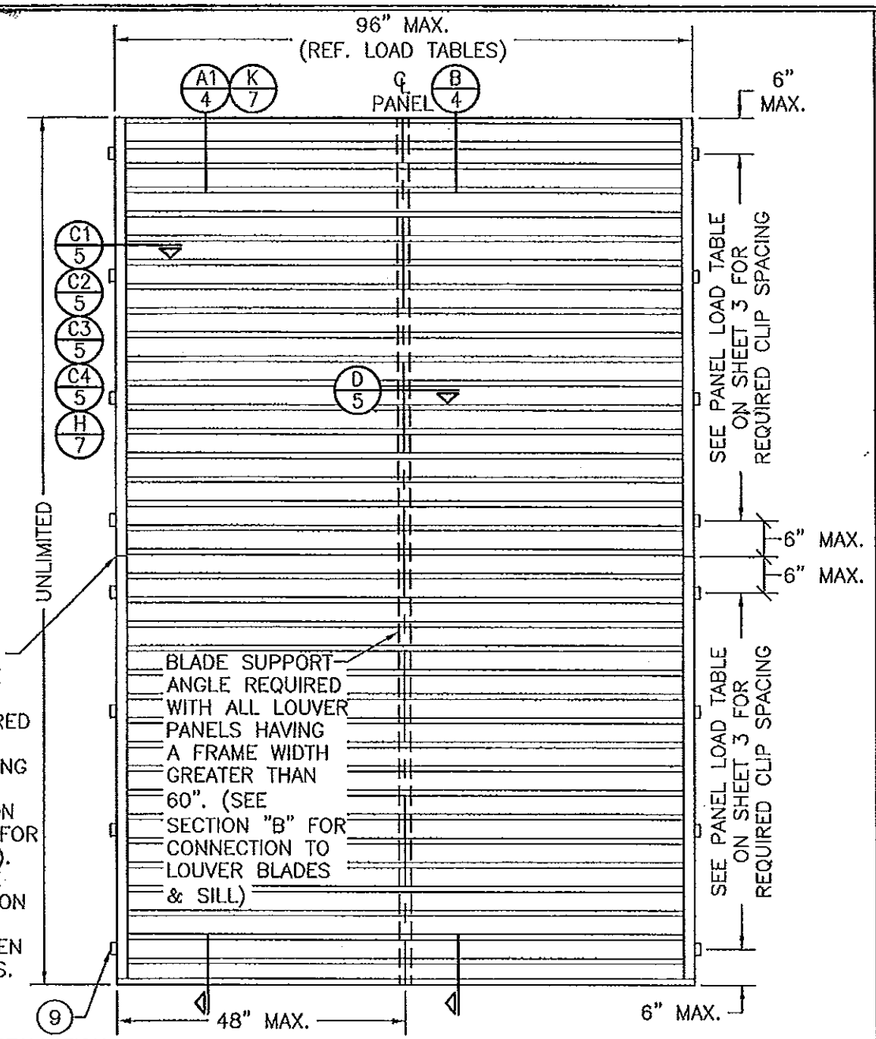

EXTERIOR ELEVATION
SINGLE LOUVER PANEL WITH BLADE SUPPORT ANGLE

NOTE: LOUVER PANELS MAY BE STACKED/SPLICED VERTICALLY OR THE LOUVER PANEL MAY RUN VERTICALLY TO INFINITE HEIGHT PROVIDING OPENING IS PROPERLY DESIGNED BY OTHERS TO SUPPORT THE LOUVER PANELS. BLADE SUPPORT ANGLE IS CONTINUOUS FROM HEAD TO SILL AND SPLICING OF THIS ANGLE IS NOT PART OF THIS APPROVAL.

INSTALLATION CLIPS ARE NOT APPLICABLE WHEN LOUVER IS SLEEVE MOUNTED

PRODUCT REVISED
as complying with the Florida Building Code
Acceptance No 11-1117.09
Expiration Date 04/22/2014
By
Miami Dade Product Control

PRODUCT RENEWED
as complying with the Florida Building Code
Acceptance No 13-1017.04
Expiration Date 04/22/2019
By
Miami/Dade Product Control

ALLOWABLE PRESSURES

PRESSURES VARY WITH PANEL SIZE, CLIP SPACING & MULLION CONDITIONS & SHALL BE CONTROLLED BY THE LESSER OF THE ALLOWABLE PRESSURE FOR EACH OF THOSE APPLICABLE CONDITIONS. SEE LOAD TABLES ON SHEET 3 FOR ALLOWABLE PRESSURES.

THESE DRAWINGS ARE APPLICABLE ONLY TO THE PRODUCT SPECIFIED. THEY MAY NOT BE USED FOR THE ASSEMBLY AND/OR INSTALLATION OF ANY OTHER PRODUCT NOR MAY THEY BE USED FOR RATIONAL AND/OR LOCAL APPROVAL OF ANY PRODUCT NOT PRODUCED BY THE MANUFACTURER STATED ON THESE DRAWINGS.

WARREN W. SCHAEFER LICENSE No. 44135 STATE OF FLORIDA PROFESSIONAL ENGINEER
CERTIFICATE OF AUTHORIZATION No. 0-7 2011

NO.	REVISION DESCRIPTION	BY	DATE
A1	UPDATE TO CURRENT STANDARDS	W.R.M.	11/07/11

DRAWN BY: W.R.M.
CHECKED BY: W.W.S.
PLOT: 1=24
DATE: 12/02/05

DRAWING TITLE: EA-64 LOUVER SYSTEM

MANUFACTURER: ARROW UNITED INDUSTRIES
450 RIVERSIDE DRIVE
WYALUSING, PA 18853
570-746-1888

CONSULTANTS
W. W. SCHAEFER ENGINEERING & CONSULTING, P.A. (CA 6809)
7480 150TH COURT NORTH
PALM BEACH GARDENS, FL 33418
PHONE: 561-744-3424
WARREN W. SCHAEFER, P.E.
P.E. NO. 44135

DRAWING NO. 1464
REV. A
SHEET NO. 1 OF 15

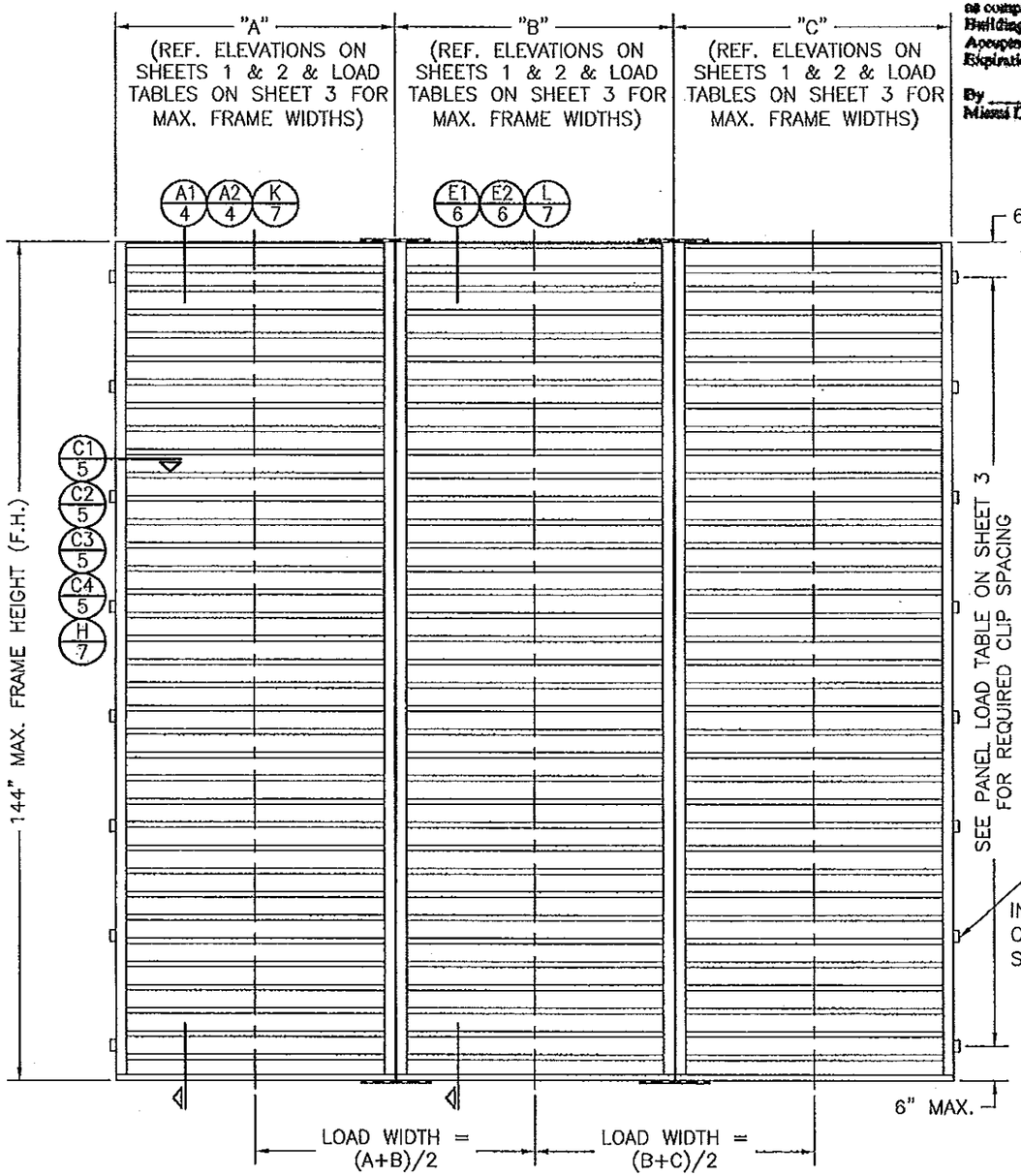

INSTALLATION CLIPS ARE NOT APPLICABLE WHEN LOUVER IS SLEEVE MOUNTED

EXTERIOR ELEVATION
MULLED UNITS

(3 PANEL UNIT SHOWN; MORE THAN 3 PANELS MAY BE MULLED/STACKED HORIZONTALLY)

RECTANGULAR PANELS SHOWN; SHAPED PANELS MAY ALSO BE MULLED PROVIDING THE MULLION END CONNECTIONS ARE AS DETAILED WITH THE ABOVE RECTANGULAR ELEVATION.

PRODUCT REVISED
as complying with the Florida Building Code
Acceptance No 11-1117.09
Expiration Date 04/22/2014
By
Miami Dade Product Control

PRODUCT RENEWED
as complying with the Florida Building Code
Acceptance No 13-1017.04
Expiration Date 04/22/2019
By
Miami Dade Product Control

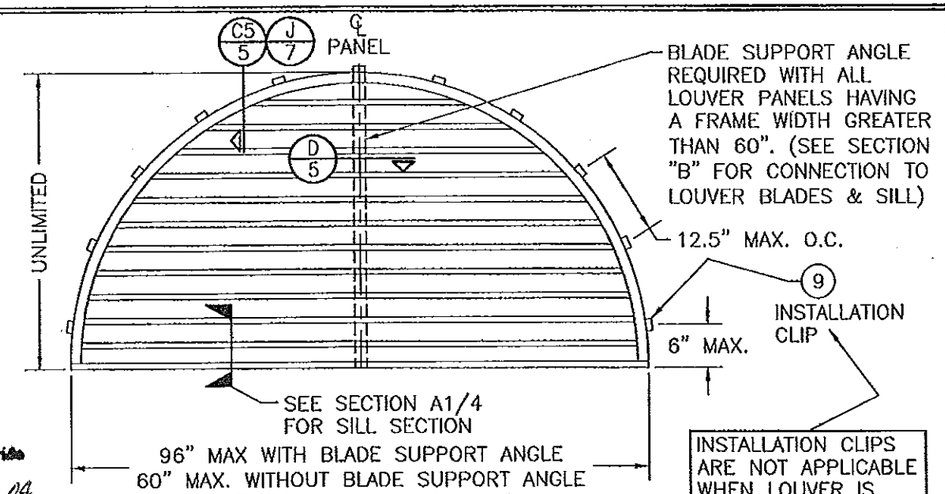

INSTALLATION CLIPS ARE NOT APPLICABLE WHEN LOUVER IS SLEEVE MOUNTED

EXTERIOR ELEVATION
HALF ROUND LOUVER PANEL

(OTHER SHAPES APPLICABLE PER APPROVED SHAPE TABLE)

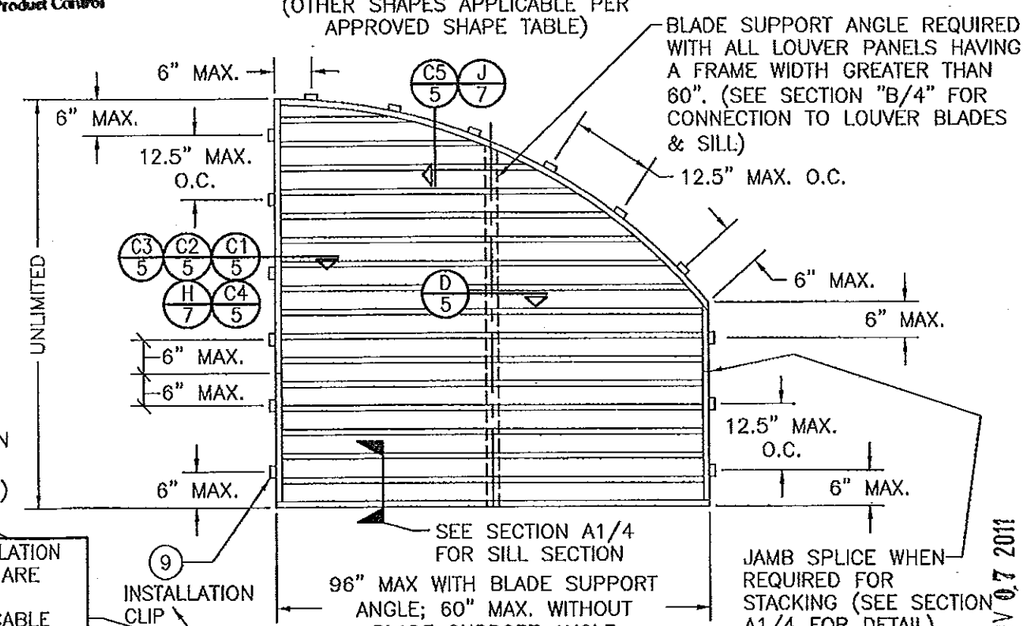

EXTERIOR ELEVATION
PARTIAL ARCH TOP PANEL

(OTHER SHAPES APPLICABLE PER APPROVED SHAPE TABLE)

APPROVED SHAPES

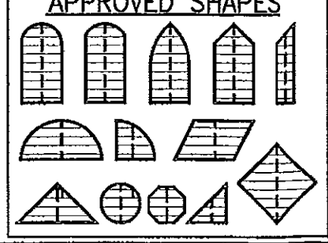

NOTES:

1. OTHER SHAPES MAY APPLY PROVIDING THEY ARE SIMILAR TO THOSE SHOWN & HAVE CORNER CONSTRUCTION AS DESCRIBED ON ALL SHEETS.
2. ALL SHAPED LOUVER PANELS ARE RESTRICTED TO THE SAME PANEL WIDTHS & PRESSURE AS THE RECTANGULAR LOUVER PANELS & MAY BE STACKED VERTICALLY & HORIZONTALLY THE SAME AS THE RECTANGULAR PANELS.
3. CLIP SPACING IS RESTRICTED TO 6" FROM ENDS & 12.5" MAX. O.C. FOR ALL SHAPED LOUVER PANELS.
4. WHEN BLADES EXCEED 60" IN LENGTH (UP TO 96") BLADE SUPPORT ANGLE AND BRACKETS ARE REQUIRED AT A MAXIMUM OF 48" FROM BLADE ENDS.
5. ALL OTHER SHAPES, EXCEPT SQUARE & RECTANGULAR, MUST HAVE BLADE SUPPORT ANGLE AND BRACKETS AT CENTER OF SPAN REGARDLESS OF BLADE LENGTH.
6. SPLICES MAYNOT EXIST ON BENT OR SLOPED JAMBS. ONLY STRAIGHT VERTICAL JAMBS MAY BE SPLICED.

NO.	REVISION DESCRIPTION	BY	DATE

DRAWN BY: W.R.H. | CHECKED BY: W.W.S.
PLOT: 1=24 | DATE: 12/02/05

MANUFACTURER
ARROW UNITED INDUSTRIES
450 RIVERSIDE DRIVE
WYALUSING, PA 18853
570-746-1888

DRAWING TITLE
EA-64 LOUVER SYSTEM

CONSULTANTS
W. SCHAEFER ENGINEERING CONSULTING, P.A. (CA 6809)
7480 130TH COURT NORTH
PALM BEACH GARDENS, FL 33418
PHONE: 561-744-3424

NOV 07 2011

WARREN W. SCHAEFER
LICENSE NO. 44135
STATE OF FLORIDA
PROFESSIONAL ENGINEER

DRAWING NO. 1464 | REV. A
SHEET NO. 2 OF 15

MULLION LOAD TABLE (SEE INSTRUCTIONS BELOW)

MULLION SPAN (IN.)	LOAD WIDTH (IN.)	ALLOWABLE PRESSURE (+/- PSF)
18"	96"	180.0
24"	96"	164.3
	90"	175.3
	84"	180.0
30"	96"	131.5
	90"	140.2
	84"	150.2
	78"	161.8
	72"	175.3
	66"	180.0
36"	96"	109.6
	90"	116.9
	84"	125.2
	78"	134.8
	72"	146.1
	66"	159.3
	60"	175.3
	54"	180.0
42"	96"	93.9
	90"	100.2
	84"	107.3
	78"	115.6
	72"	125.2
	66"	136.6
	60"	150.2
	54"	166.9
	48"	180.0
48"	96"	82.2
	90"	87.6
	84"	93.9
	78"	101.1
	72"	109.6
	66"	119.5
	60"	131.5
	54"	146.1
	48"	164.3
	42"	180.0

MULLION SPAN (IN.)	LOAD WIDTH (IN.)	ALLOWABLE PRESSURE (+/- PSF)
60"	96"	65.7
	90"	70.1
	84"	75.1
	78"	80.9
	72"	87.6
	66"	95.6
	60"	105.2
	54"	116.9
	48"	131.5
	42"	150.2
	36"	175.3
	30"	180.0
66"	96"	59.8
	90"	63.7
	84"	68.3
	78"	73.5
	72"	79.7
	66"	86.9
	60"	95.6
	54"	106.2
	48"	119.5
	42"	136.6
	36"	159.3
	30"	180.0
72"	96"	54.8
	90"	58.4
	84"	62.6
	78"	67.4
	72"	73.0
	66"	79.7
	60"	87.6
	54"	97.4
	48"	109.6
	42"	125.2
	36"	146.1
	30"	175.3
	24"	180.0

MULLION SPAN (IN.)	LOAD WIDTH (IN.)	ALLOWABLE PRESSURE (+/- PSF)
84"	96"	47.0
	90"	50.1
	84"	53.7
	78"	57.8
	72"	62.6
	66"	68.3
	60"	75.1
	54"	83.5
	48"	93.9
	42"	107.3
	36"	125.2
	30"	150.2
	24"	180.0
96"	96"	41.1
	90"	43.8
	84"	47.0
	78"	50.6
	72"	54.8
	66"	59.8
	60"	65.7
	54"	73.0
	48"	82.2
	42"	93.9
	36"	109.6
	30"	131.5
	24"	164.3
	18"	180.0
108"	96"	36.5
	90"	39.0
	84"	41.7
	78"	44.9
	72"	48.7
	66"	53.1
	60"	58.4
	54"	64.9
	48"	73.0
	42"	83.5
	36"	97.4
	30"	116.9
	24"	146.1
	18"	180.0

MULLION SPAN (IN.)	LOAD WIDTH (IN.)	ALLOWABLE PRESSURE (+/- PSF)
120"	96"	32.9
	90"	35.1
	84"	37.6
	78"	40.4
	72"	43.8
	66"	47.8
	60"	52.6
	54"	58.4
	48"	65.7
	42"	75.1
	36"	87.6
	30"	105.2
	24"	131.5
	18"	175.3
132"	96"	27.2
	90"	29.0
	84"	31.1
	78"	33.5
	72"	36.3
	66"	39.6
	60"	43.6
	54"	48.4
	48"	54.4
	42"	62.2
	36"	72.6
	30"	87.1
	24"	108.9
	18"	145.2
144"	72"	28.0
	66"	30.5
	60"	33.5
	54"	37.3
	48"	41.9
	42"	47.9
	36"	55.9
	30"	67.1
	24"	83.9
	18"	111.8

PANEL LOAD TABLE

PANEL WIDTH (IN.)	(1) CLIP SPACING (IN.)	(2) ALLOWABLE PRESSURE (+/- PSF)
36"	12.5"	180.0
	20"	127.3
42"	12.5"	154.3
	20"	109.1
48"	12.5"	120.0
	20"	95.5
54"	12.5"	106.7
	20"	84.8
60"	12.5"	90.0
	20"	76.4
66"	12.5"	109.1
	20"	69.4

PANEL WIDTH (IN.)	(1) CLIP SPACING (IN.)	(2) ALLOWABLE PRESSURE (+/- PSF)
72"	12.5"	100.0
	20"	63.6
78"	12.5"	92.3
	20"	58.7
84"	12.5"	85.0
	20"	54.5
90"	12.5"	80.0
	20"	50.9
96"	12.5"	75.0
	20"	47.7

(1) ALL SHAPED LOUVER PANELS ARE RESTRICTED TO A FRAME CLIP SPACING OF 12.5" O.C. 20" CLIP SPACING IS ONLY ALLOWED ON RECTANGULAR & SQUARE SHAPE LOUVERS.
(2) PRESSURES RELATING TO 12.5" CLIP SPACING SHALL BE APPLICABLE TO ALL SLEEVE MOUNTED LOUVERS

LOAD TABLE NOTE
(APPLICABLE TO MULLION & PANEL LOAD TABLES):
THE LESSER LOAD FROM THE MULLION LOAD TABLE & THE PANEL LOAD TABLE SHALL CONTROL AS THE ALLOWABLE FOR THE ENTIRE MULLED UNIT.

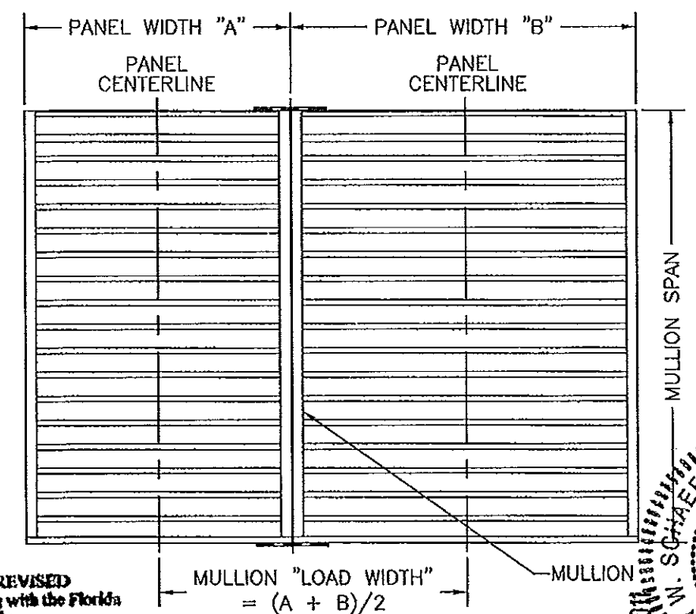

LOUVER ASSEMBLY

MULLION LOAD TABLE INSTRUCTIONS:

1. DETERMINE REQUIRED DESIGN PRESSURE OF THE LOUVER ASSEMBLY.
2. DETERMINE THE REQUIRED MULLION SPAN OF THE LOUVER ASSEMBLY.
3. DETERMINE THE PANEL WIDTH "A" & "B" AND THE MULLION LOAD WIDTH.
4. GO TO THE MULLION LOAD TABLE AND CHECK THE ALLOWABLE PRESSURE FOR THE RESPECTIVE MULLION SPAN/LOAD WIDTH.
5. GO TO THE PANEL LOAD TABLE AND CHECK THE ALLOWABLE PRESSURE FOR EACH PANEL WIDTH.
6. IF ALL THE ALLOWABLE PRESSURES OF INSTRUCTIONS 4 & 5 ARE GREATER THAN THE REQUIRED DESIGN PRESSURE, THE ASSEMBLY IS ACCEPTABLE.
7. IF ANY ALLOWABLE PRESSURE OF INSTRUCTIONS 4 & 5 ARE LESS THAN THE REQUIRED DESIGN PRESSURE, THE ASSEMBLY IS NOT ACCEPTABLE UNLESS THE ASSEMBLY SIZE OR PRESSURE IS REDUCED AND INSTRUCTIONS FROM 1 TO 7 ARE FOLLOWED AGAIN.

PRODUCT RENEWED
as complying with the Florida Building Code
Acceptance No 13-1017.04
Expiration Date 04/22/2019
By
Miami Dade Product Control

PRODUCT REVISED
as complying with the Florida Building Code
Acceptance No 11-1117.09
Expiration Date 04/22/2014
By
Miami Dade Product Control

NOV 07 2011

DRAWN BY: W.R.M.	CHECKED BY: W.W.S.
PLOT: 1=24	DATE: 12/02/05

NO.	REVISION DESCRIPTION	BY	DATE

DRAWING TITLE: EA-64 LOUVER SYSTEM

MANUFACTURER: ARROW UNITED INDUSTRIES
450 RIVERSIDE DRIVE
WYALUSING, PA 18853
570-746-1888

CONSULTANTS: W. W. SCHAEFER ENGINEERING & CONSULTING, P.A. (CA 6809)
7480 150TH COURT NORTH
PALM BEACH GARDENS, FL 33418
PHONE: 561-744-3424

CERTIFICATE OF ENGINEER
WARREN W. SCHAEFER
No. 44135
STATE OF FLORIDA
NOV 07 2011

DRAWING NO. 1464 REV. A

SHEET NO. 3 OF 15

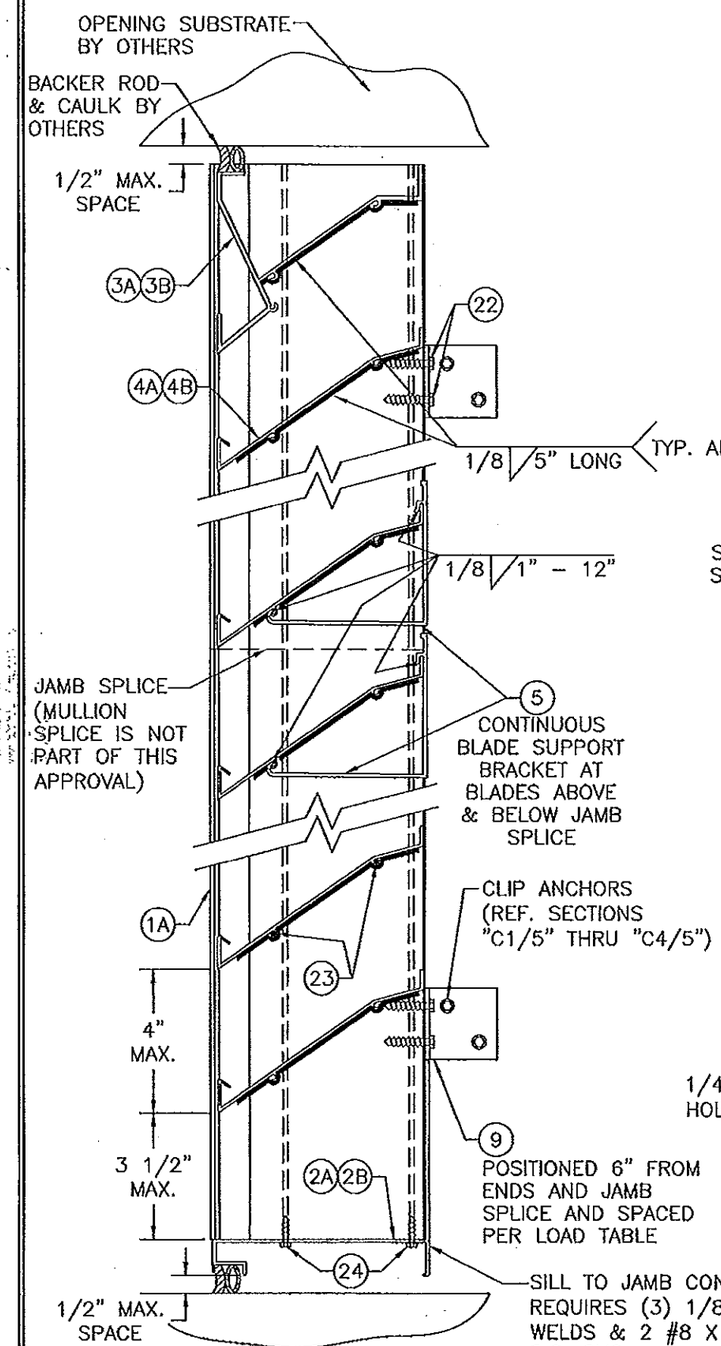

SECTION A1/4
SCALE: 3"=1'-0"
(STANDARD LOUVER)

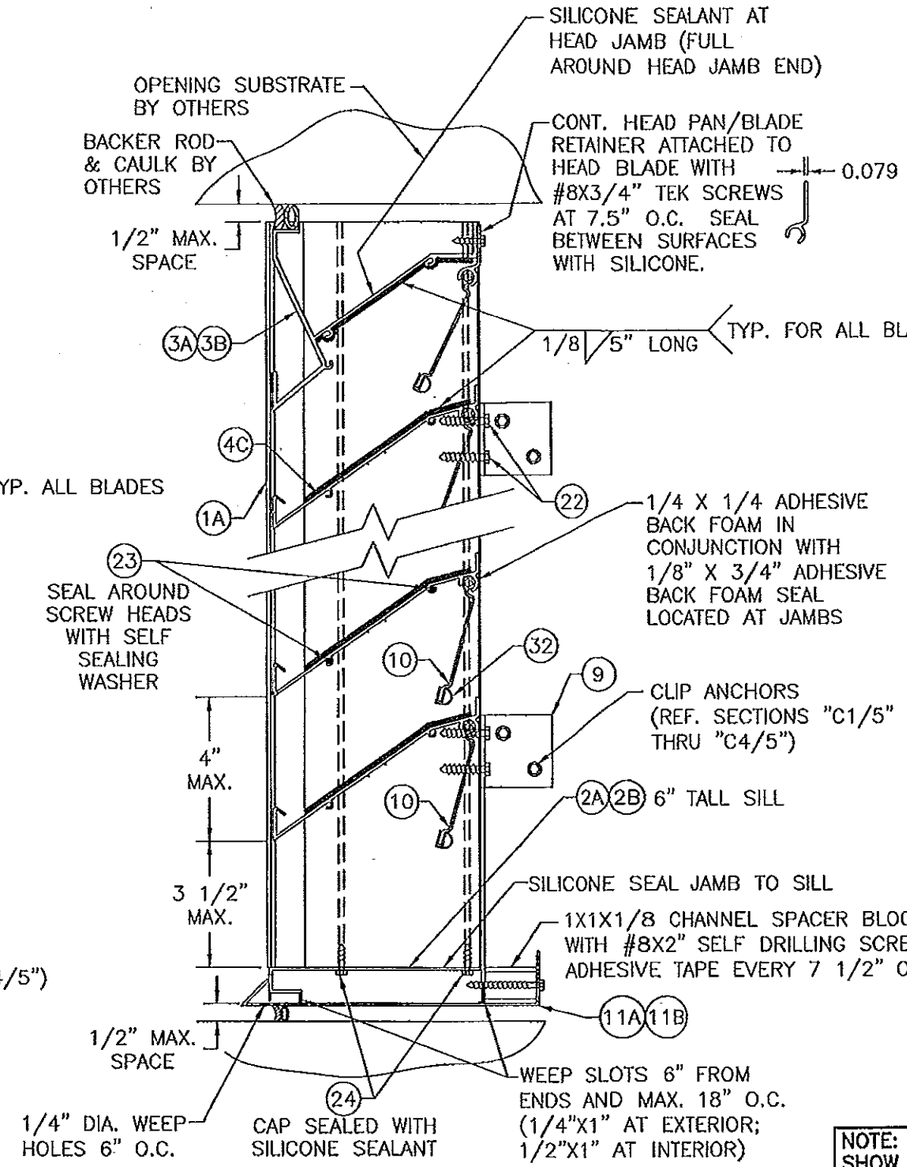

SECTION A2/4
SCALE: 3"=1'-0"
(WATER RESISTANT EA-64C LOUVER)

1) LOUVER OPERATOR NOT SHOWN, IS PART OF THIS APPROVAL.
2) INSTALLATIONS OF WATER RESISTANT LOUVERS ARE LIMITED TO 33 FT. ELEVATION.
3) ALL OUTSIDE CORNERS ARE TO BE SEALED WITH SILICONE SEALANT.

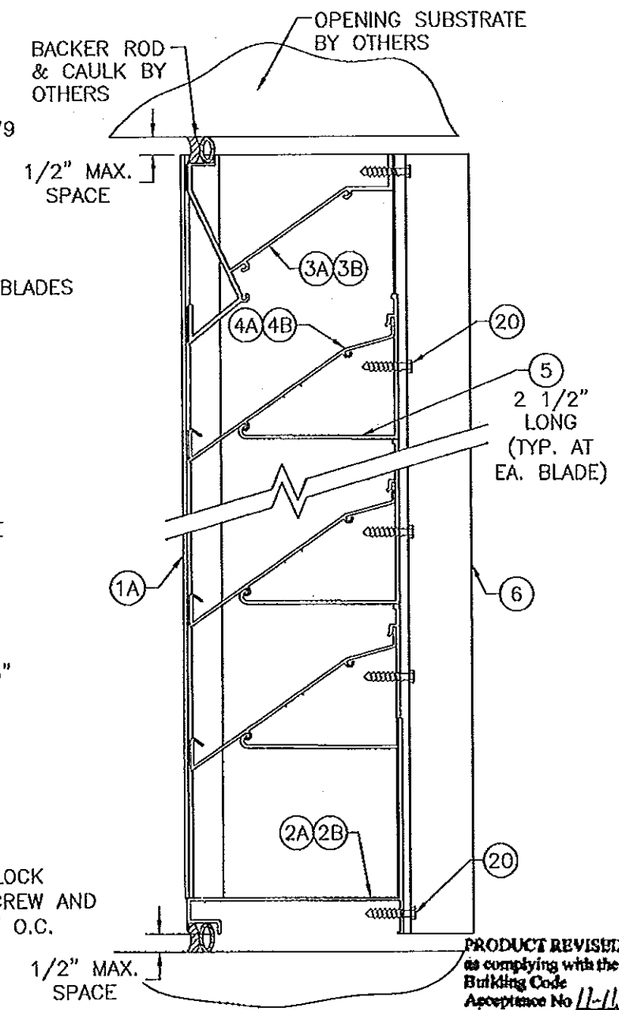

SECTION B/4
SCALE: 3"=1'-0"

PRODUCT REVISED
as complying with the Florida Building Code
Acceptance No 11-1117.09
Expiration Date 04/22/2019
By
Miami Dade Product Control

NOTE: ALL SECTIONS ON THIS SHEET SHOW THE COMBINATION OF SCREWED & WELDED BLADE END CONSTRUCTION. FOR SCREWED ONLY END CONSTRUCTION, SEE DETAILS ON SHEET 7.

OPTIONAL DETAILS ON SHEET 7 ARE NOT RATED FOR WATER RESISTANCE UNLESS THE AFD-20 DAMPER IS PLACED BEHIND THE LOUVER AS STATED IN GENERAL NOTE NO. 11

PRODUCT RENEWED
as complying with the Florida Building Code
Acceptance No 13-1017.04
Expiration Date 04/22/2019
By
Miami Dade Product Control

WARREN W. SCHAEFER LICENSE No. 44135 STATE OF FLORIDA PROFESSIONAL ENGINEER

DRAWN BY: W.R.H.	CHECKED BY: W.W.S.
PLOT: 1=4	DATE: 12/02/05

NO.	REVISION DESCRIPTION	BY	DATE

DRAWING TITLE: EA-64 LOUVER SYSTEM

MANUFACTURER: ARROW UNITED INDUSTRIES
450 RIVERSIDE DRIVE
WYALUSING, PA 18853
570-746-1888

CONSULTANTS: W. W. SCHAEFER ENGINEERING & CONSULTING, P.A. (CA 6809)
7480 150TH COURT NORTH
PALM BEACH GARDENS, FL 33418
PHONE 561-744-3424

CERTIFICATION: NOV 07 2011
WARREN W. SCHAEFER, P.E.
P.E. NO. 44135

DRAWING NO. 1464 REV. A

SHEET NO. 4 OF 15

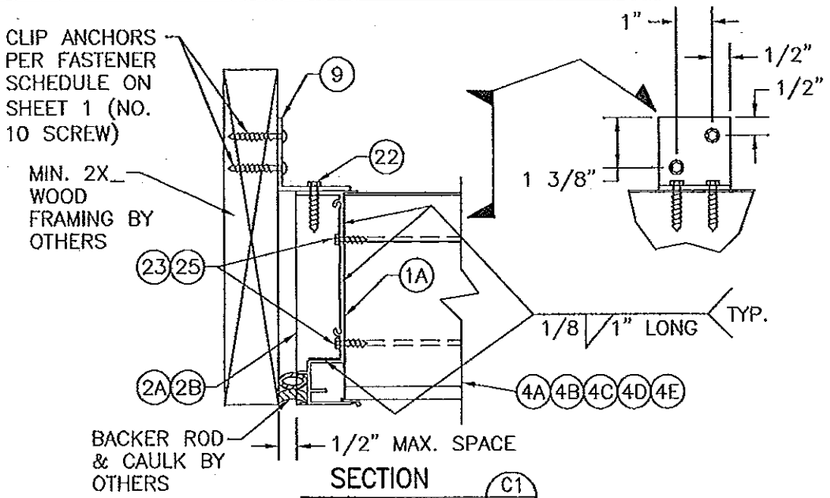

SECTION C1/5
SCALE: 3"=1'-0"
(TO WOOD)

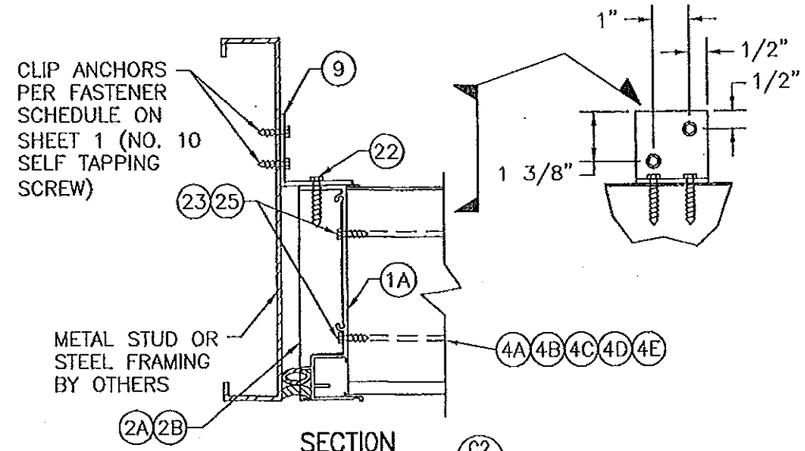

SECTION C2/5
SCALE: 3"=1'-0"
(OPTION 1 TO METAL STUD OR STEEL)
(SEE SECTION "C1" FOR DETAIL NOT SHOWN)

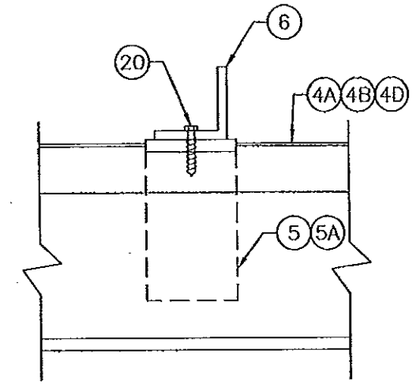

SECTION D/5
SCALE: 3"=1'-0"

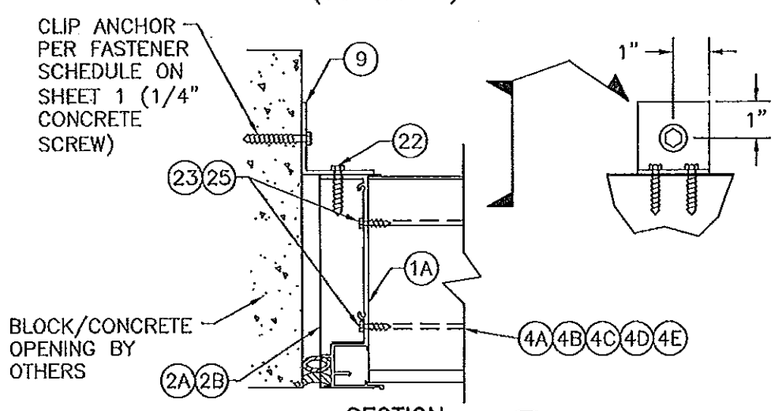

SECTION C3/5
SCALE: 3"=1'-0"
(TO BLOCK/CONCRETE)
(SEE SECTION "C1" FOR DETAIL NOT SHOWN)

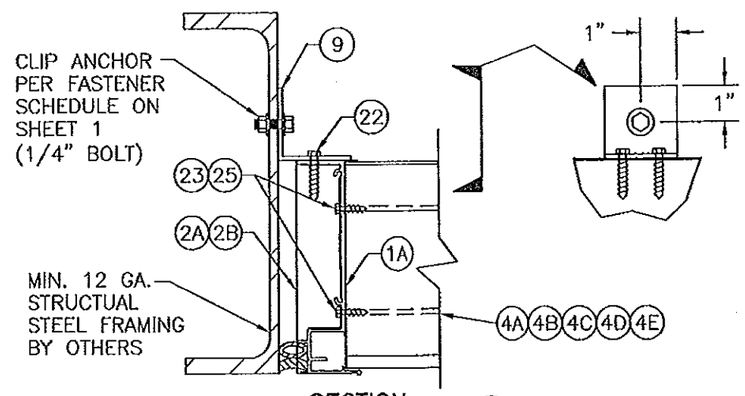

SECTION C4/5
SCALE: 3"=1'-0"
(OPTION 2 TO METAL STUD OR STEEL)
(SEE SECTION "C1" FOR DETAIL NOT SHOWN)

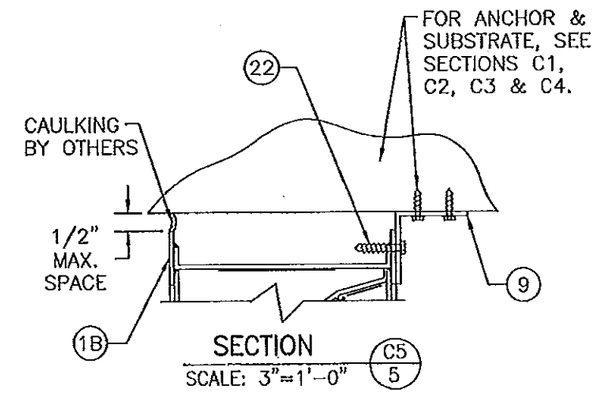

SECTION C5/5
SCALE: 3"=1'-0"

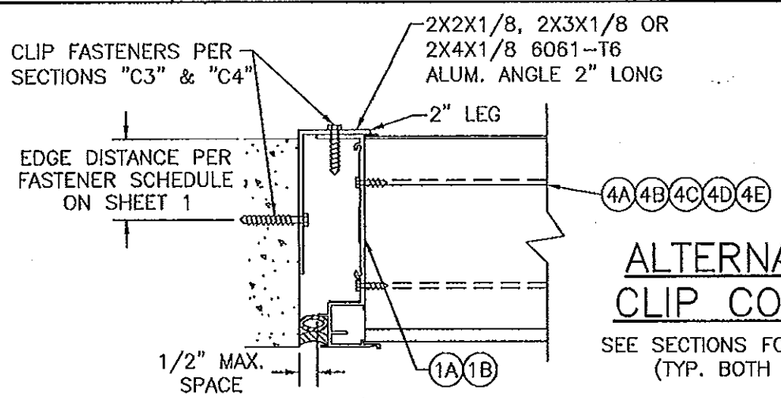

TO CONCRETE/BLOCK OR STEEL

ALTERNATE PANEL CLIP CONNECTIONS

SEE SECTIONS FOR DETAIL NOT SHOWN
(TYP. BOTH SIDES OF OPENING)

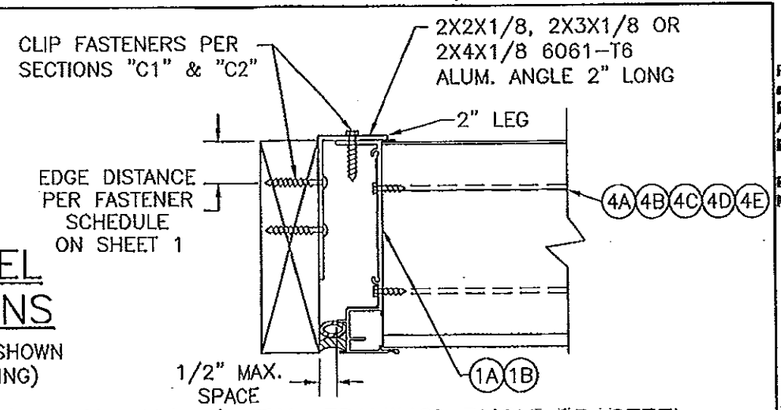

TO WOOD/METAL FRAMING, BUCK OR STEEL

PRODUCT REVISED
as complying with the Florida Building Code
Acceptance No 11-1117.09
Expiration Date 04/22/2014
By
Miami-Dade Product Control

PRODUCT RENEWED
as complying with the Florida Building Code
Acceptance No 13-1017.04
Expiration Date 04/22/2019
By
Miami-Dade Product Control

WARREN W. SCHAEFER LICENSE No. 44135 STATE OF FLORIDA PROFESSIONAL ENGINEER

DRAWN BY: W.R.H.	CHECKED BY: W.W.S.
PLOT: 1=4	DATE: 12/02/05

NO.	REVISION DESCRIPTION	BY	DATE

DRAWING TITLE: EA-64 LOUVER SYSTEM

MANUFACTURER
ARROW UNITED INDUSTRIES
450 RIVERSIDE DRIVE
WYALUSING, PA 18853
570-746-1888

CONSULTANTS
W. W. SCHAEFER ENGINEERING & CONSULTING, P.A. (CA 6809)
7480 150TH COURT NORTH
PALM BEACH GARDENS, FL 33418
PHONE: 561-744-3424

CERTIFICATION
NOV 07 2011
WARREN W. SCHAEFER, P.E.
P.E. NO. 44135

DRAWING NO. 1464
REV. A
SHEET NO. 5 OF 15

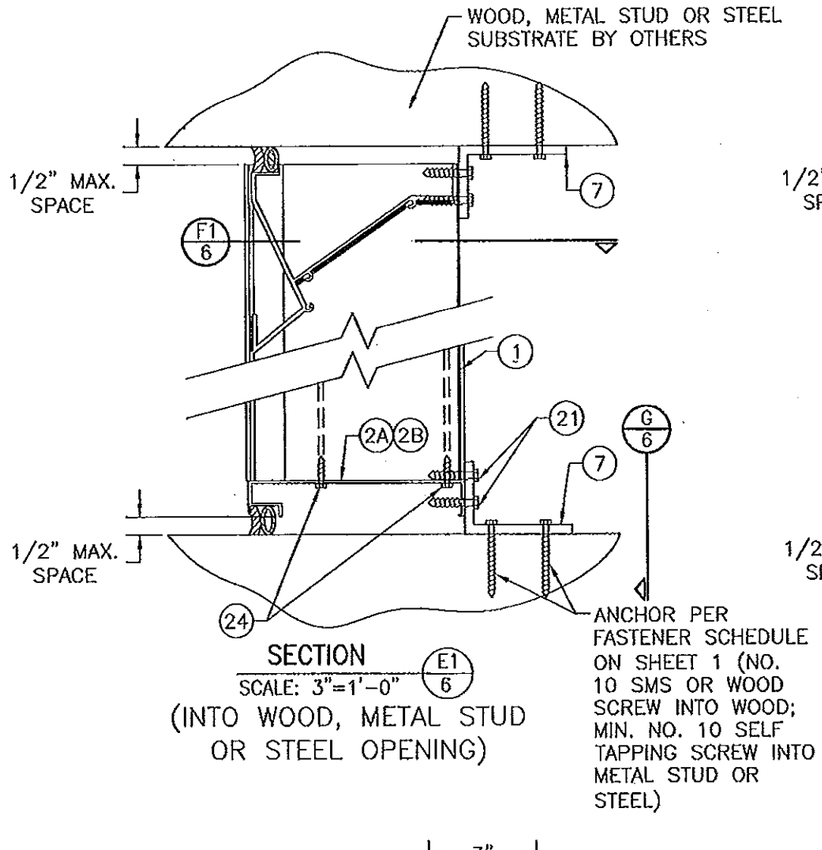

SECTION E1/6
SCALE: 3"=1'-0"
(INTO WOOD, METAL STUD OR STEEL OPENING)

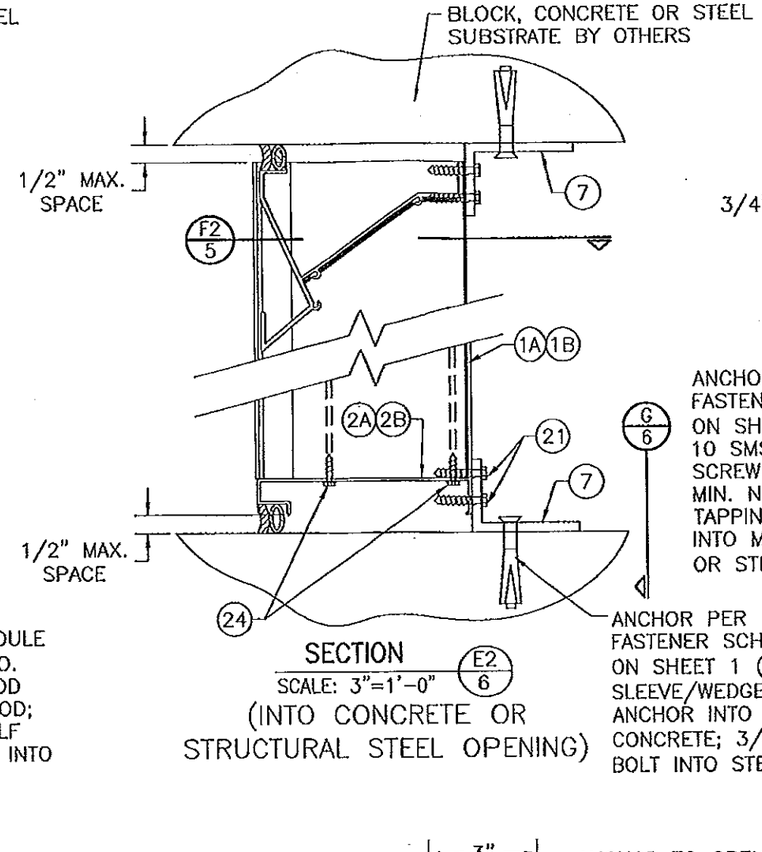

SECTION E2/6
SCALE: 3"=1'-0"
(INTO CONCRETE OR STRUCTURAL STEEL OPENING)

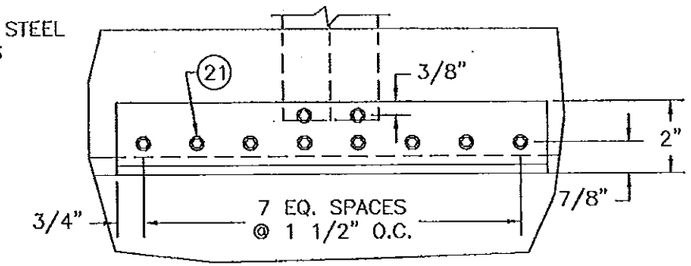

VIEW G/6
SCALE: 3"=1'-0"
(SEE SECTION E1/6 OR E2/6 FOR ANCHORS TO OPENING OR J/7 FOR WELDS TO SLEEVE)

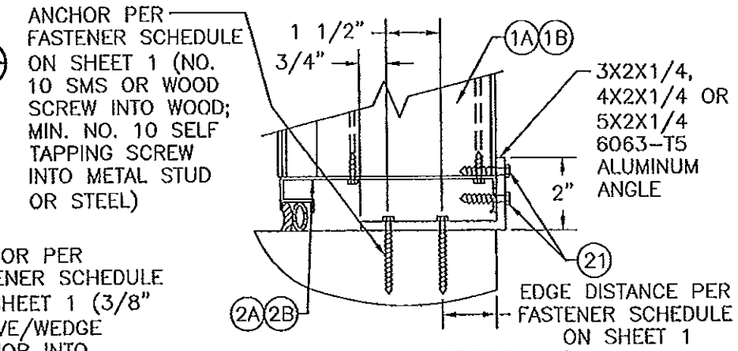

OPTIONAL SECTION E1/6
SCALE: 3"=1'-0"
SILL SHOWN; HEAD SIMILAR

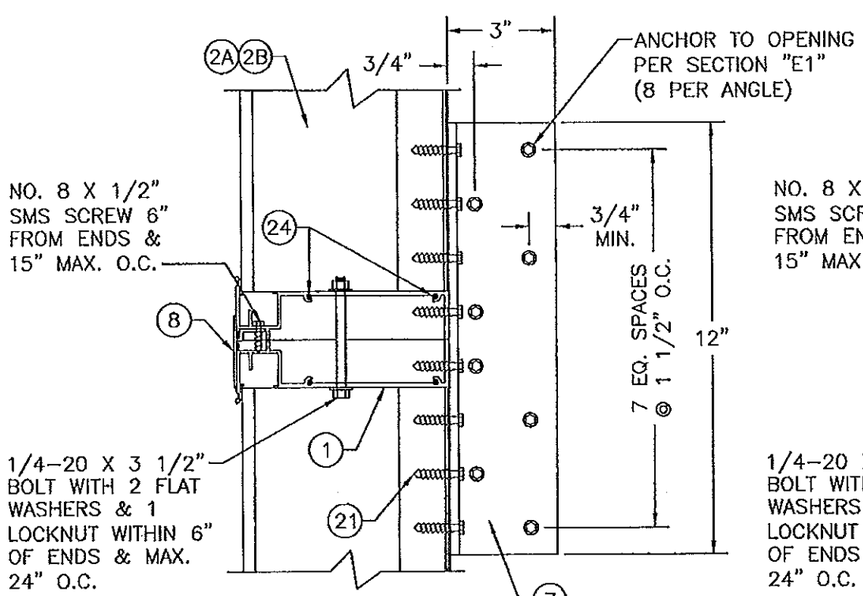

SECTION F1/6
SCALE: 3"=1'-0"

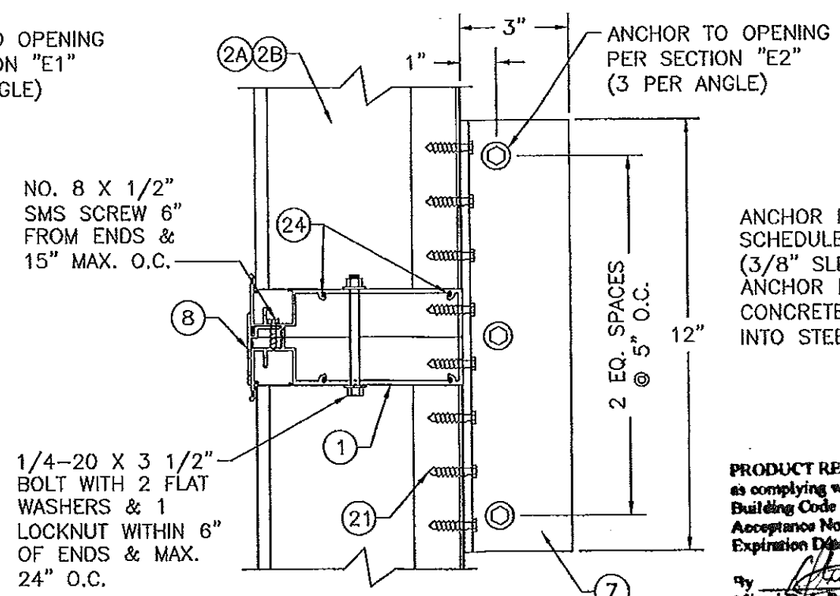

SECTION F2/6
SCALE: 3"=1'-0"

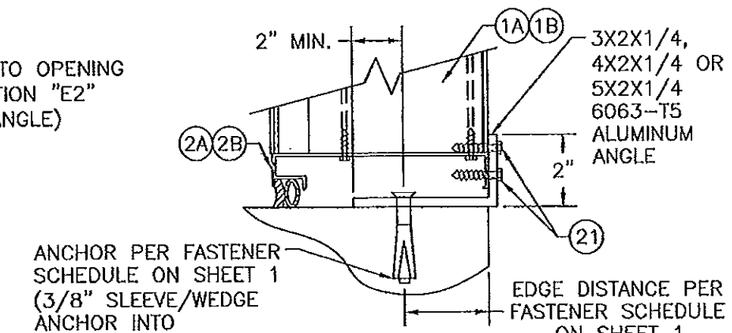

OPTIONAL SECTION E2/6
SCALE: 3"=1'-0"
SILL SHOWN; HEAD SIMILAR

PRODUCT RENEWED
as complying with the Florida Building Code
Acceptance No 13-1017.04
Expiration Date 04/22/2019
By
Miami Dade Product Control

PRODUCT REVISED
as complying with the Florida Building Code
Acceptance No 11-1117.09
Expiration Date 04/22/2014
By
Miami Dade Product Control

WARREN W. SCHAEFER LICENSE No. 44135 STATE OF FLORIDA PROFESSIONAL ENGINEER

DRAWN BY: W.R.M.	CHECKED BY: W.W.S.
PLOT: 1=4	DATE: 12/02/05

NO.	REVISION DESCRIPTION	BY	DATE

DRAWING TITLE: EA-64 LOUVER SYSTEM

MANUFACTURER: ARROW UNITED INDUSTRIES
450 RIVERSIDE DRIVE
WYALUSING, PA 18853
570-746-1888

CONSULTANTS: W. W. SCHAEFER ENGINEERING & CONSULTING, P.A. (CA 6809)
7480 150TH COURT NORTH
PALM BEACH GARDENS, FL 33418
PHONE: 561-744-3424

CERTIFICATION
NOV 07 2011
WARREN W. SCHAEFER, P.E.
P.E. NO. 44135

DRAWING NO. 1464 REV. A

SHEET NO. 6 OF 15

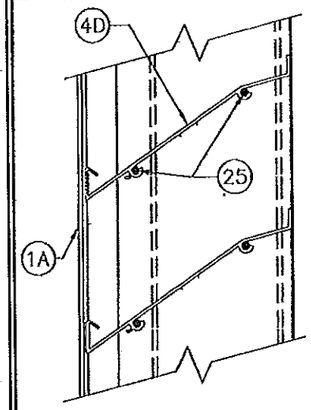

THESE OPTIONAL DETAILS ARE NOT WATER RESISTANT UNLESS ALL BLADE END CONNECTIONS ARE SCREWED & WELDED AS SHOWN ON SHEET 4 OR THE AFD-20 DAMPER IS PLACED BEHIND THE LOUVER.

OPTIONAL BLADE DETAIL WITH SCREWED END CONSTRUCTION (STANDARD LOUVER)

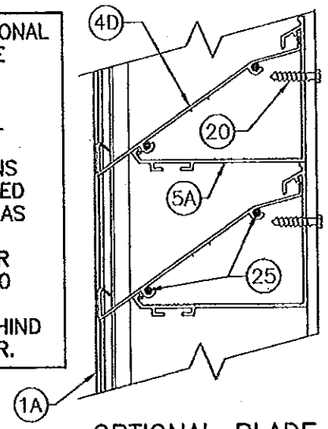

OPTIONAL BLADE SUPPORT BRACKET DETAIL WITH SCREWED END CONSTRUCTION

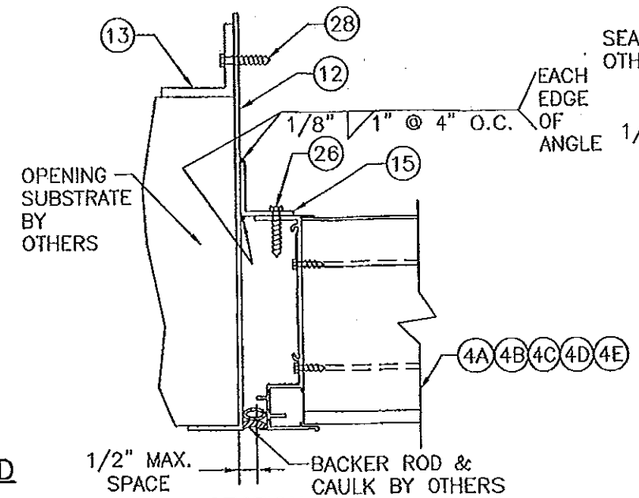

SECTION H/7
SCALE: 3"=1'-0"

(SLEEVE MOUNT CONDITION)
(FOR LOUVER DETAIL NOT SHOWN, SEE SECTION C1/5)

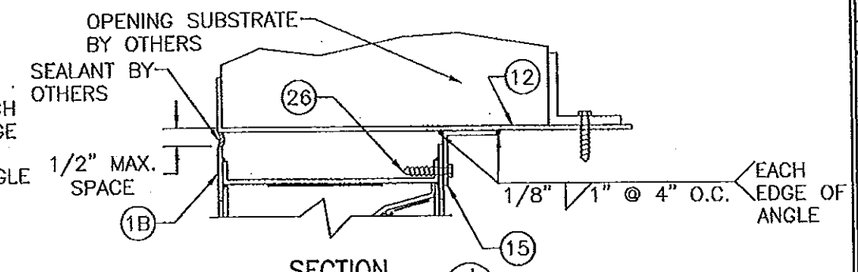

SECTION J/7
SCALE: 3"=1'-0"

(SLEEVE MOUNT CONDITION AT RADIUS)
(FOR LOUVER DETAIL NOT SHOWN, SEE SECTION C5/5)

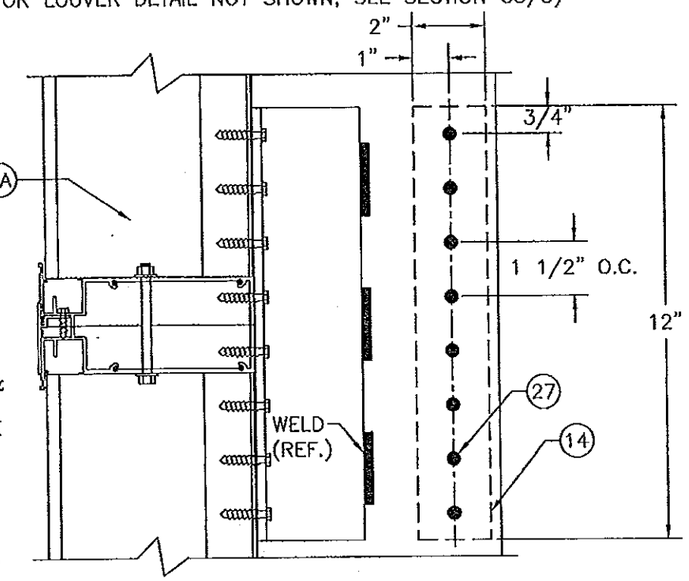

SECTION M/7
SCALE: 3"=1'-0"

(FOR LOUVER DETAIL NOT SHOWN, SEE SECTION F1/6)

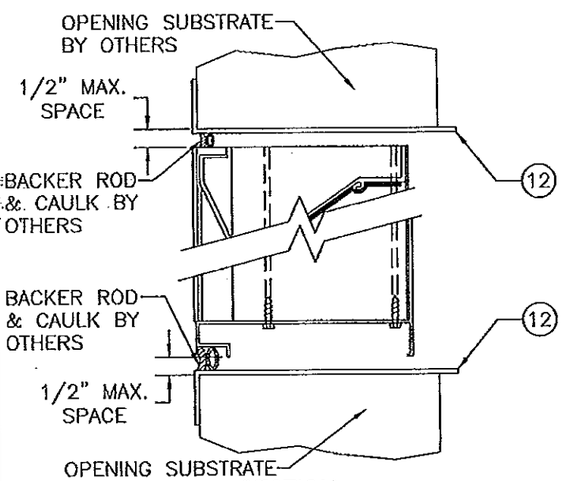

SECTION K/7
SCALE: 3"=1'-0"

(SLEEVE MOUNT CONDITION)
(FOR LOUVER DETAIL NOT SHOWN, SEE SECTION A1/4 OR A2/4)

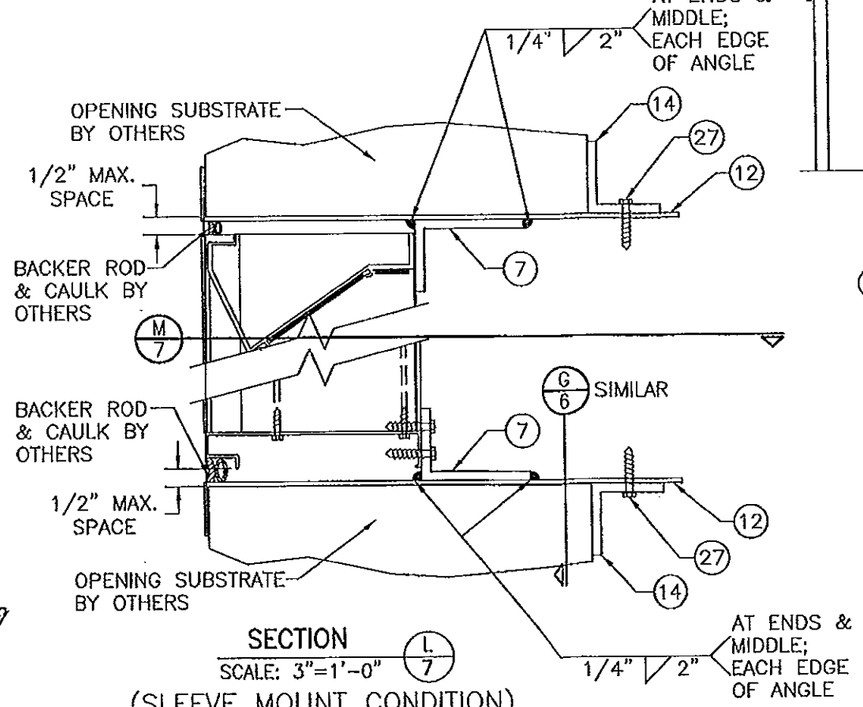

SECTION L/7
SCALE: 3"=1'-0"

(SLEEVE MOUNT CONDITION)
(FOR LOUVER DETAIL NOT SHOWN, SEE SECTION E1/6)

PART 7 & 15 MAY BE POSITIONED WITH LEG TURNED OUT AS SHOWN IN THESE SECTIONS OR WITH LEG TURNED UNDER THE LOUVER

PRODUCT RENEWED
as complying with the Florida Building Code
Acceptance No 13-1017.04
Expiration Date 04/22/2019
By
Miami Dade Product Control

PRODUCT REVISED
as complying with the Florida Building Code
Acceptance No 11-1117.09
Expiration Date 04/22/2019
By
Miami Dade Product Control

WARREN W. SCHAEFER LICENSE No. 44135 STATE OF FLORIDA PROFESSIONAL ENGINEER

DRAWN BY: W.R.M.	CHECKED BY: W.W.S.
PLOT: 1=1	DATE: 12/02/05

NO.	REVISION DESCRIPTION	BY	DATE

MANUFACTURER
ARROW UNITED INDUSTRIES
450 RIVERSIDE DRIVE
WYALUSING, PA 18853
570-746-1888

DRAWING TITLE
EA-64 LOUVER SYSTEM

CONSULTANTS
W. W. SCHAEFER ENGINEERING & CONSULTING, P.A. (CA 6809)
7480 150TH COURT NORTH
PALM BEACH GARDENS, FL 33418
PHONE: 561-744-3424

CERTIFICATION
NOV 07 2011
WARREN W. SCHAEFER, P.E.
P.E. NO. 44135

DRAWING NO. 1464
REV. A
SHEET NO. 7 OF 15

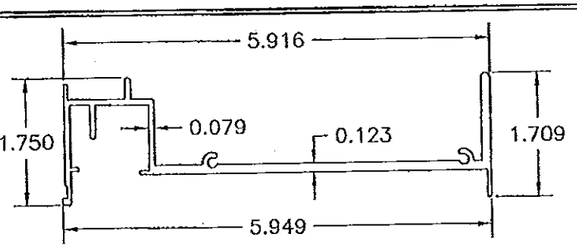

(1A) STANDARD STRAIGHT JAMB

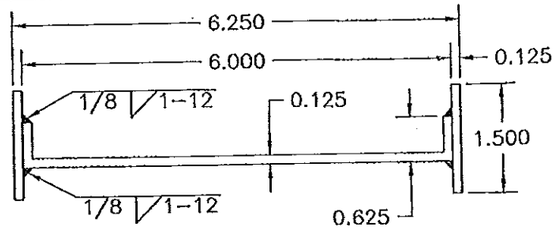

(1B) RADIUS JAMB

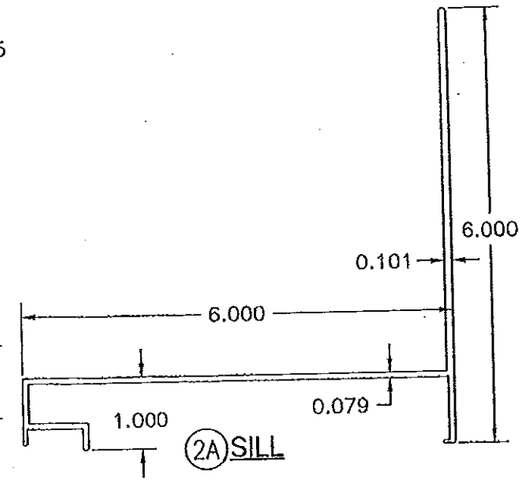

(2A) SILL

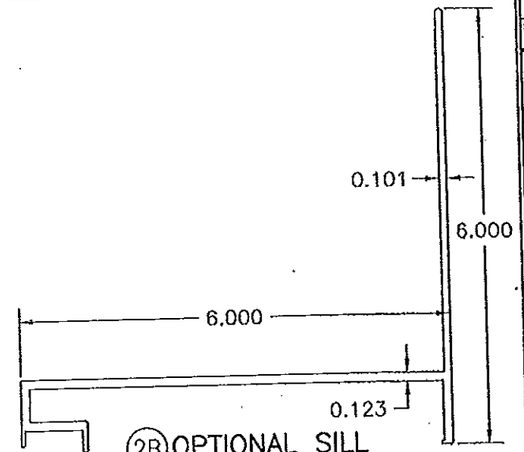

(2B) OPTIONAL SILL

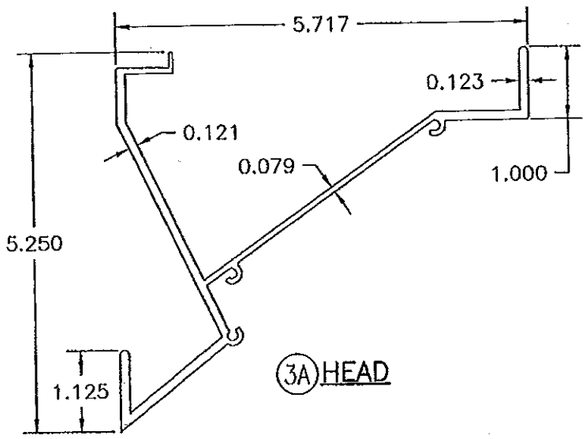

(3A) HEAD

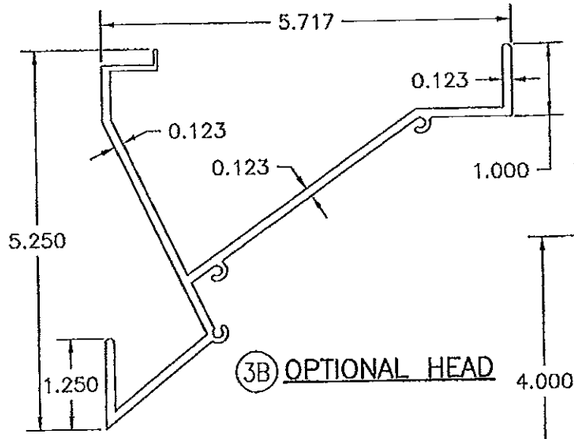

(3B) OPTIONAL HEAD

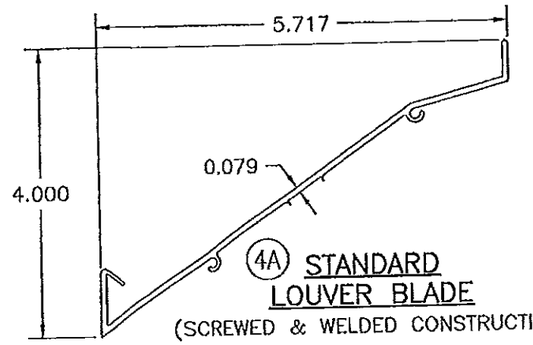

(4A) STANDARD LOUVER BLADE
(SCREWED & WELDED CONSTRUCTION)

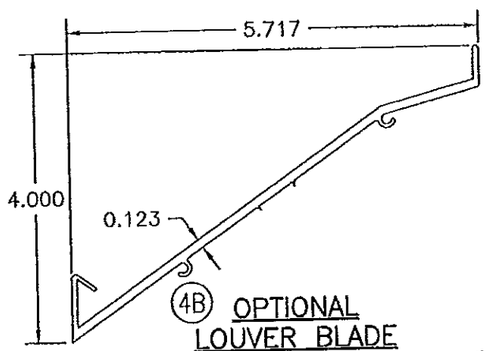

(4B) OPTIONAL LOUVER BLADE
(SCREWED & WELDED CONSTRUCTION)

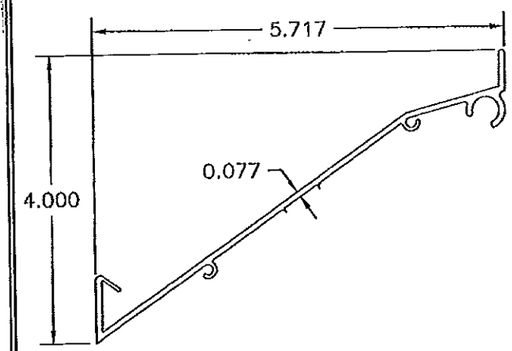

(4C) WATER RESISTANT LOUVER BLADE
(SCREWED & WELDED CONSTRUCTION)

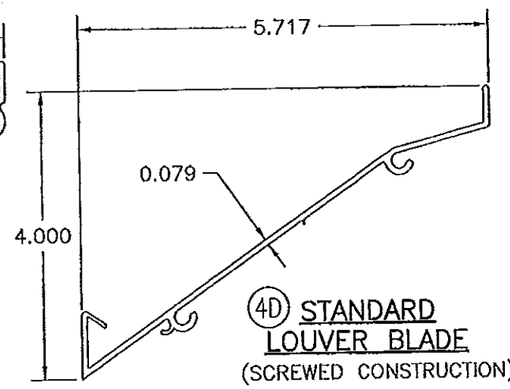

(4D) STANDARD LOUVER BLADE
(SCREWED CONSTRUCTION)

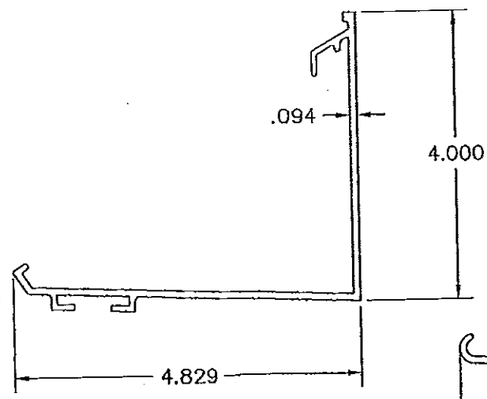

(5A) BLADE SUPPORT BRACKET
(SCREWED CONSTRUCTION)

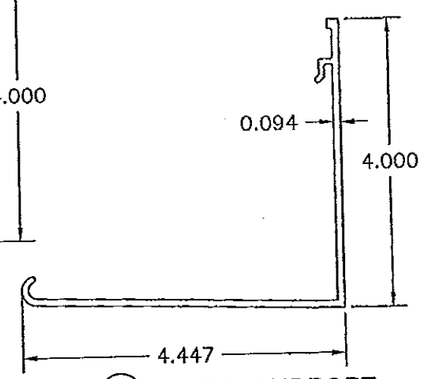

(5) BLADE SUPPORT BRACKET
(SCREWED & WELDED CONSTRUCTION)

PRODUCT RENEWED
as complying with the Florida Building Code
Acceptance No 13-1017.04
Expiration Date 04/22/2019
By
Miami Dade Product Control

PRODUCT REVISED
as complying with the Florida Building Code
Acceptance No 11-1117.09
Expiration Date 04/22/2014
By
Miami Dade Product Control

WARREN W. SCHAEFER
LICENSE No. 44135
STATE OF FLORIDA
PROFESSIONAL ENGINEER

DRAWN BY: W.R.M.	CHECKED BY: W.W.S.
PLOT: 1=2	DATE: 12/02/03

NO.	REVISION DESCRIPTION	BY	DATE

DRAWING TITLE: EA-64 LOUVER SYSTEM

MANUFACTURER: ARROW UNITED INDUSTRIES
450 RIVERSIDE DRIVE
WYALUSING, PA 18853
570-746-1888

CONSULTANTS: W. W. SCHAEFER ENGINEERING & CONSULTING, P.A. (CA 6809)
7480 150TH COURT NORTH
PALM BEACH GARDENS, FL 33418
PHONE: 561-744-3424

CERTIFICATION: NOV 07 2011
WARREN W. SCHAEFER, P.E.
P.E. NO. 44135

DRAWING NO. 1464 | REV. A

SHEET NO. 8 OF 15

ITEM #		ITEM DESCRIPTION	MANUFACTURER/NOTES
		PARTS	
1A		STANDARD STRAIGHT JAMB	6063–T6 ALUMINUM
1B		RADIUS JAMB	5052–H32 ALUMINUM
2A		SILL	6063–T6 ALUMINUM
2B		OPTIONAL SILL	6063–T5 ALUMINUM
3A		HEAD	6063–T5 ALUMINUM
3B		OPTIONAL HEAD	6063–T5 ALUMINUM
4A		STANDARD LOUVER BLADE (SCREWED & WELDED ENDS)	6063–T5 ALUMINUM
4B		OPTIONAL LOUVER BLADE (SCREWED & WELDED ENDS)	6063–T5 ALUMINUM
4C		(1) WATER RESISTANT LOUVER BLADE (SCREWED & WELDED ENDS)	6063–T5 ALUMINUM
4D		SCREWED END LOUVER BLADE	6063–T5 ALUMINUM
5A		BLADE SUPPORT BRACKET	6063–T5 ALUMINUM (USED WITH BLADE 4D)
5		BLADE SUPPORT BRACKET	6063–T5 ALUMINUM (USED WITH BLADES 4A, 4B & 4C)
6		BLADE SUPPORT ANGLE	6063–T5 ALUMINUM
7		MULLION END SUPPORT ANGLE	6061–T6 ALUMINUM
8		MULLION COVER	6063–T6 ALUMINUM
9		SIDE JAMB CLIP ANGLE	6061–T6 ALUMINUM
10		DAMPER BLADE	6063–T5 ALUMINUM (USED WITH PART 4B)
11A		STANDARD SILL PAN	16 GA. 5052–H32 ALUMINUM
11B		OPTIONAL SILL PAN	16 GA. 5052–H32 ALUMINUM
12		MOUNTING SLEEVE	5052–H32 ALUMINUM
13		CONTINUOUS MOUNTING ANGLE	6063–T5 ALUMINUM
14		MULLION END SUPPORT ANGLE	6063–T5 ALUMINUM
15		CONTINUOUS MOUNTING ANGLE	6063–T5 ALUMINUM
		FASTENERS	
20		1/4–14 X 1 1/4" SELF DRILLING SCREW	1 THROUGH SUPPORT ANGLE AT EACH SUPPORT BRACKET AND AT HEAD & SILL
21		1/4–14 X 1 1/4" HILTI TEK SCREW	10 PER MULLION SUPPORT ANGLE INTO FRAME
22		1/4–14 X 1 1/4" HILTI TEK SCREW	2 PER EACH CLIP ANGLE INTO JAMB
23		NO. 8 X 3/4" S.S. SMS	2 THROUGH JAMB INTO EACH LOUVER BLADE
24		NO. 8 X 3/4" S.S. SMS	2 THROUGH SILL INTO EACH SIDE & MULLION JAMB
25		1/4–14 X 1 1/2" SELF DRILLING SCREW	2 THROUGH JAMB INTO EACH LOUVER BLADE
26		1/4–14 X 1 1/4" SELF DRILLING SCREW	WITHIN 3" OF ENDS & MAX. 6" O.C.
27		1/4–14 X 1 1/4" SELF DRILLING SCREW	8 PER MULLION END SUPPORT ANGLE
28		1/4–14 X 1 1/4" SELF DRILLING SCREW	WITHIN 6" OF CORNERS & MAX. 12 1/2" O.C.
		SEALS & SEALANTS	
32		BULB SEAL	MCL 743091

(1) PARTS 4C & 10 SHALL BE USED IN PLACE OF PART 4A OR 4B WHEN LOUVER IS REQUIRED TO RESIST WATER PENETRATION.

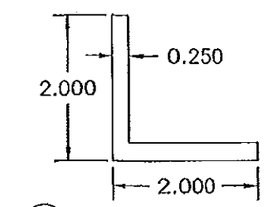

(6) BLADE SUPPORT ANGLE
LENGTH = LOUVER HEIGHT

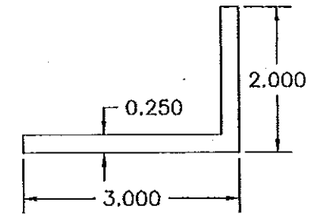

(7) MULLION SUPPORT ANGLE
LENGTH = 12"

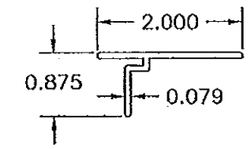

(8) MULLION COVER

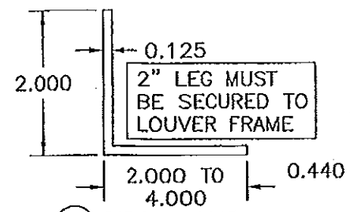

(9) SIDE JAMB CLIP ANGLE
LENGTH = 2"

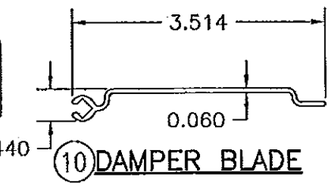

(10) DAMPER BLADE

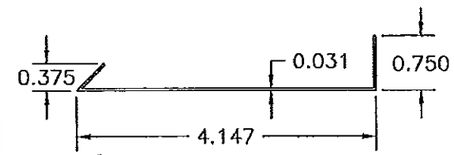

(11A) STANDARD SILL PAN

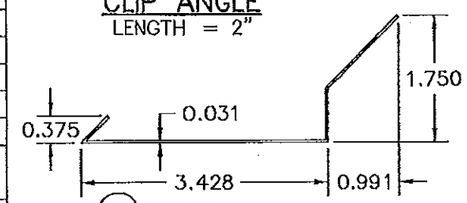

(11B) OPTIONAL SILL PAN

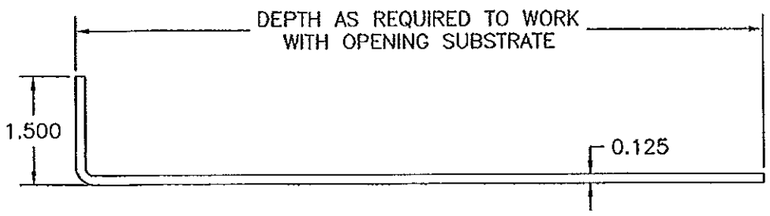

(12) MOUNTING SLEEVE
(CONTINUOUS AT ALL SIDES; WELDED AT CORNERS)

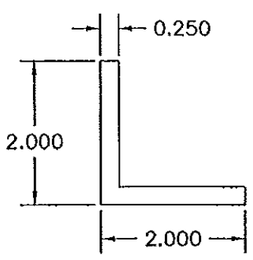

(13) CONTINUOUS MOUNTING ANGLE

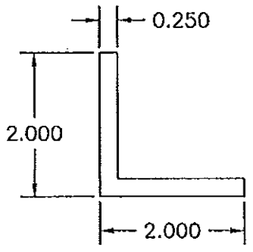

(14) MULLION END SUPPORT ANGLE
LENGTH = 12"

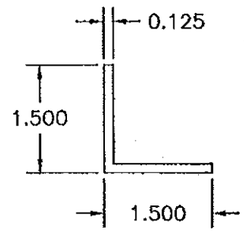

(15) CONTINUOUS MOUNTING ANGLE

PRODUCT REVISED
as complying with the Florida Building Code
Acceptance No 11-1117.09
Expiration Date 04/22/2019
By
Miami Dade Product Control

PRODUCT RENEWED
as complying with the Florida Building Code
Acceptance No 13-1017.04
Expiration Date 04/22/2019
By
Miami Dade Product Control

WARREN W. SCHAEFER LICENSE No. 44135 STATE OF FLORIDA PROFESSIONAL ENGINEER

DRAWN BY: W.R.H.	CHECKED BY: W.W.S.
PLOT: 1=2	DATE: 12/02/05

NO.	REVISION DESCRIPTION	BY	DATE

DRAWING TITLE: EA–64 LOUVER SYSTEM

MANUFACTURER: ARROW UNITED INDUSTRIES, 450 RIVERSIDE DRIVE, WYALUSING, PA 18853, 570–746–1888

CONSULTANTS: W. W. SCHAEFER ENGINEERING & CONSULTING, P.A. (CA 6809), 7480 150TH COURT NORTH, PALM BEACH GARDENS, FL 33418, PHONE: 561–744–3424

CERTIFICATION: NOV 07 2011 — WARREN W. SCHAEFER, P.E. P.E. NO. 44135

DRAWING NO. 1464 REV. A

SHEET NO. 9 OF 15

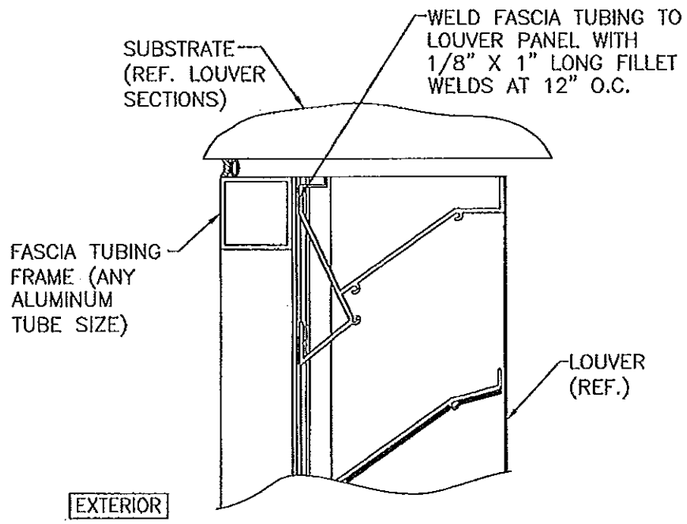

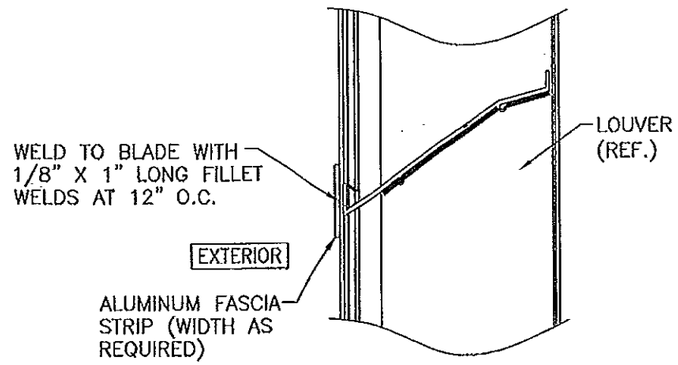

OPTIONAL FASCIA STRIP DETAIL

FOR LOUVER DETAILS, SEE SHEETS 1–9

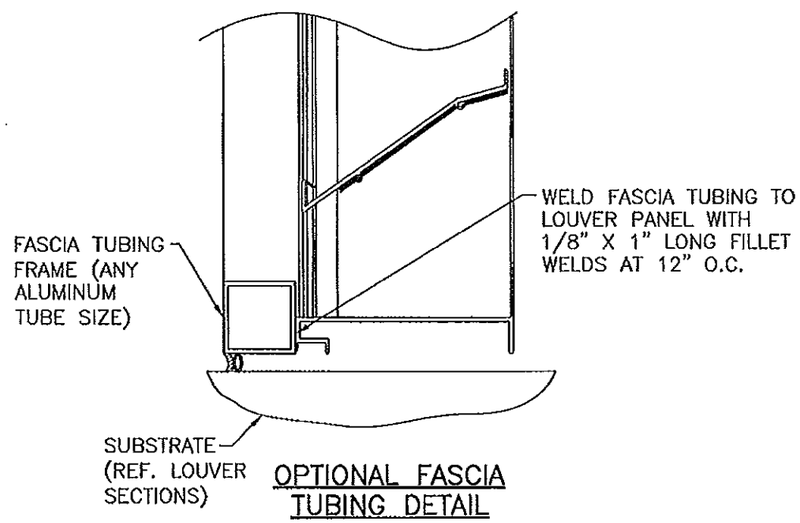

OPTIONAL FASCIA TUBING DETAIL

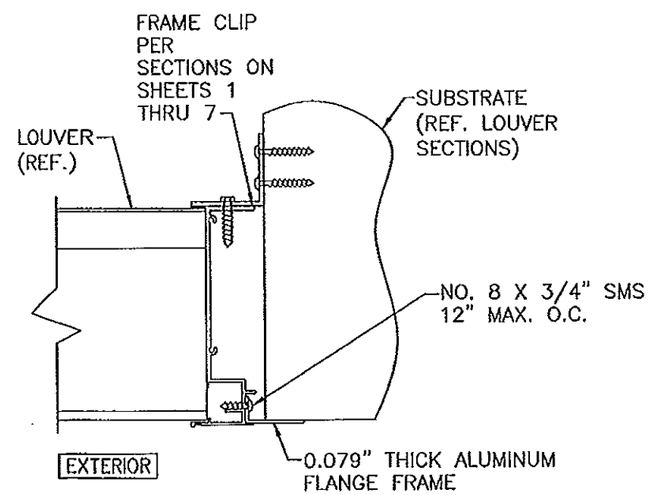

NON-STRUCTURAL & MAY NOT BE USED TO SUPPORT LOUVER FRAME

OPTIONAL FLANGE FRAME DETAIL

PRODUCT REVISED
as complying with the Florida Building Code
Acceptance No 11-1117.09
Expiration Date 04/22/2014
By
Miami Dade Product Control

PRODUCT RENEWED
as complying with the Florida Building Code
Acceptance No 13-1017.04
Expiration Date 04/22/2019
By
Miami Dade Product Control

WARREN W. SCHAEFER LICENSE No. 44135 STATE OF FLORIDA PROFESSIONAL ENGINEER

NO.	REVISION DESCRIPTION	BY	DATE

DRAWN BY: W.R.M. | CHECKED BY: W.W.S.
PLOT: 1=4 | DATE: 12/02/05

DRAWING TITLE: EA-64 LOUVER SYSTEM

MANUFACTURER: ARROW UNITED INDUSTRIES
450 RIVERSIDE DRIVE
WYALUSING, PA 18853
570-746-1888

CONSULTANTS: W. W. SCHAEFER ENGINEERING & CONSULTING, P.A. (CA 6809)
7480 150TH COURT NORTH
PALM BEACH GARDENS, FL 33418
PHONE: 561-744-3424

CERTIFICATION: NOV 07 2011
WARREN W. SCHAEFER, P.E.
P.E. NO. 44135

DRAWING NO. 1464 | REV. A

SHEET NO. 10 OF 15

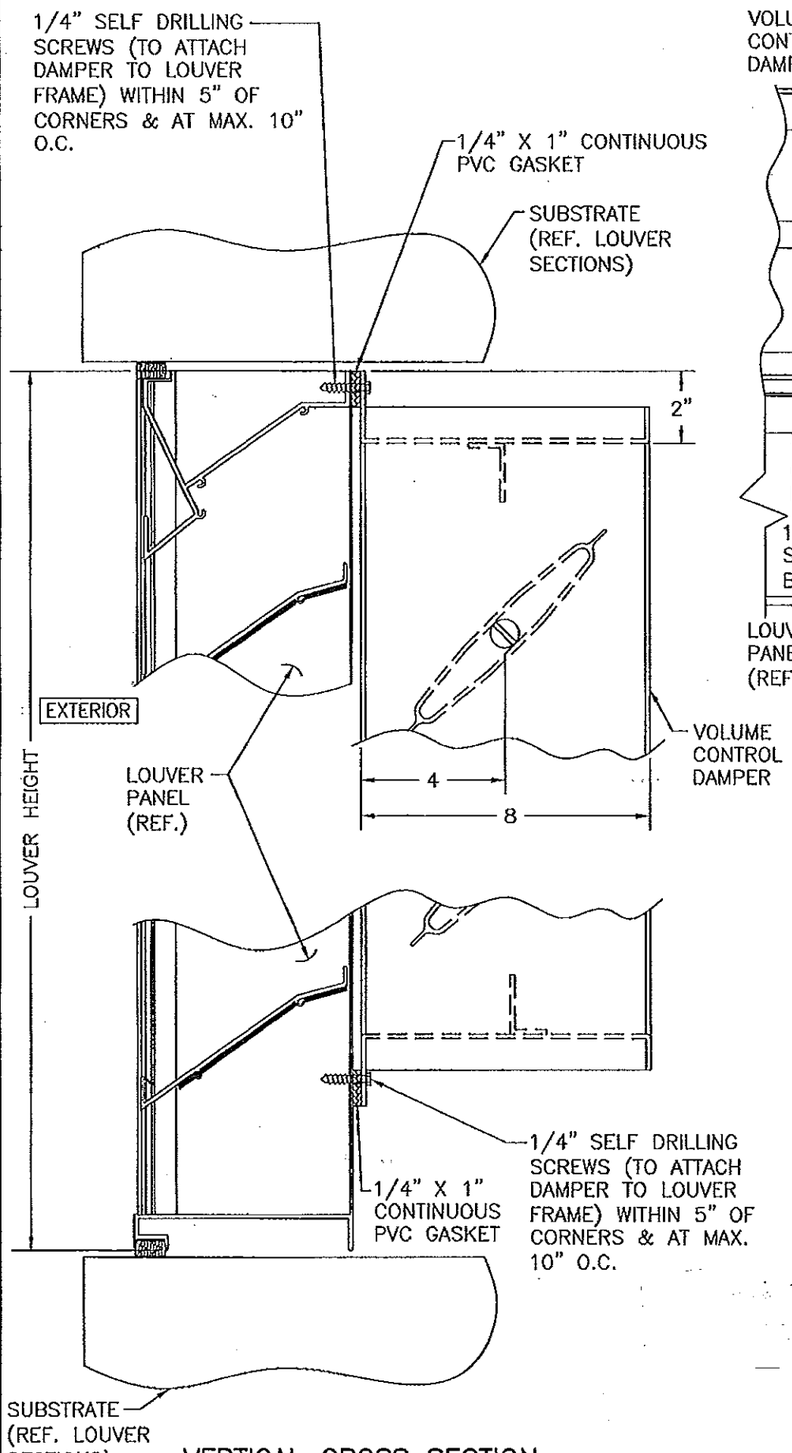

VERTICAL CROSS SECTION
VC-822 OR VC-28/29 DAMPER DETAIL

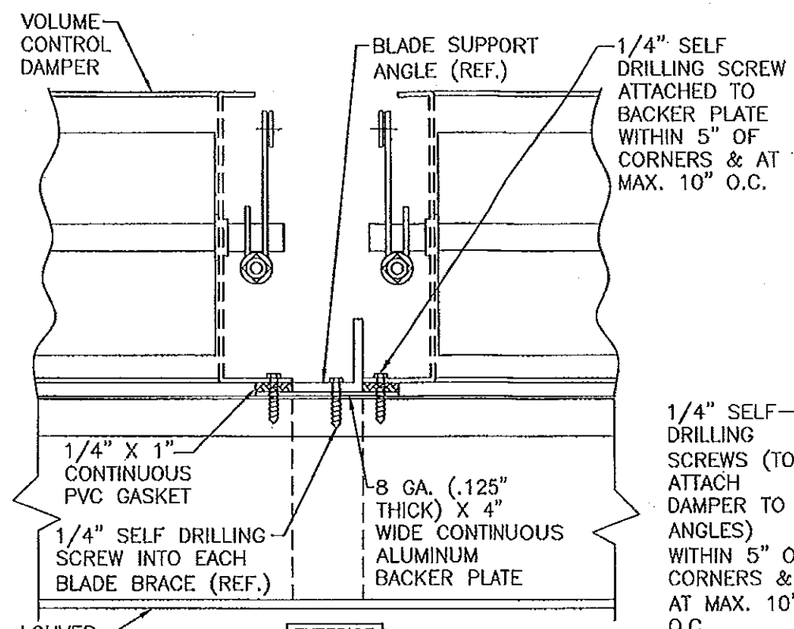

VC-822 OR VC-28/29 DAMPER
SECTION AT BLADE STIFFENER

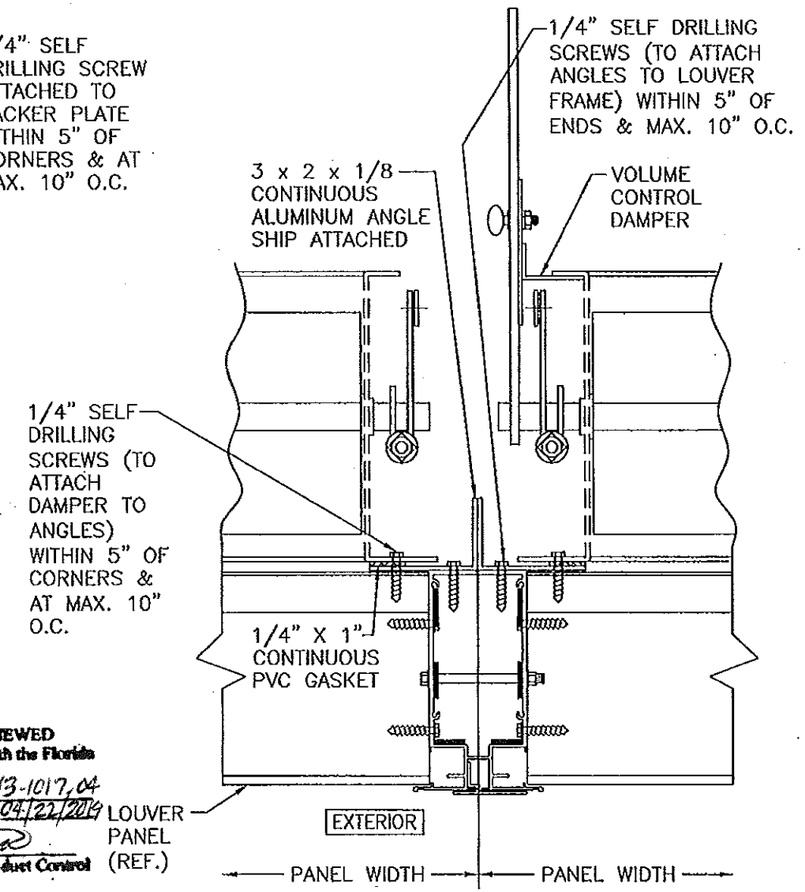

VC-822 OR VC-28/29 DAMPER
SECTION AT MULLION

PRODUCT RENEWED
as complying with the Florida Building Code
Acceptance No 13-1017.04
Expiration Date 04/22/2014
By
Miami Dade Product Control

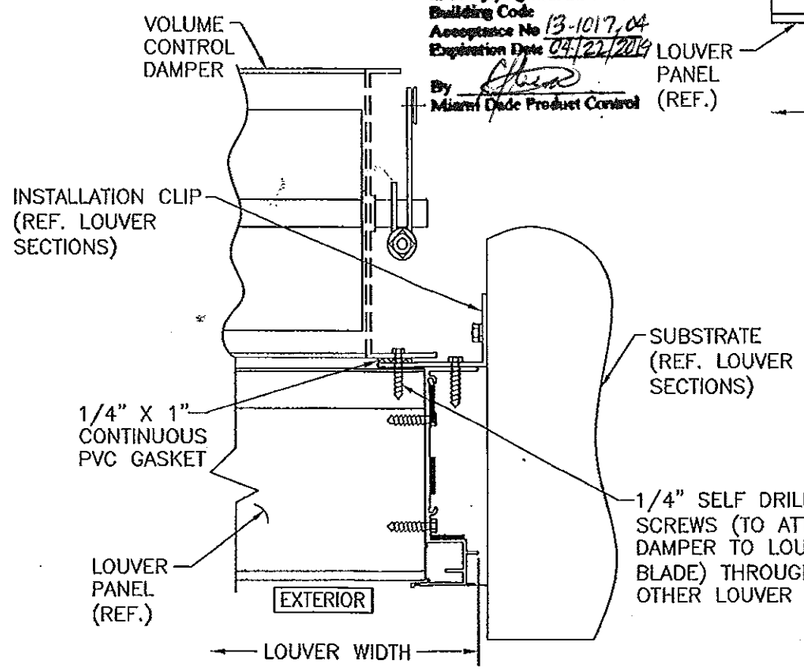

VC-822 OR VC-28/29
DAMPER JAMB DETAIL

FOR LOUVER DETAILS, SEE SHEETS 1-9

PRODUCT REVISED
as complying with the Florida Building Code
Acceptance No 11-1117.09
Expiration Date 04/22/2014
By
Miami Dade Product Control

WARREN W. SCHAEFER LICENSE No. 44135 STATE OF FLORIDA PROFESSIONAL ENGINEER

DRAWN BY: W.R.M.	CHECKED BY: W.W.S.
PLOT: 1=4	DATE: 12/02/05

NO.	REVISION DESCRIPTION	BY	DATE

MANUFACTURER
ARROW UNITED INDUSTRIES
450 RIVERSIDE DRIVE
WYALUSING, PA 18853
570-746-1888

DRAWING TITLE
EA-64 LOUVER SYSTEM

CONSULTANTS
W. W. SCHAEFER ENGINEERING & CONSULTING, P.A. (CA 6809)
7480 150TH COURT NORTH
PALM BEACH GARDENS, FL 33418
PHONE: 561-744-3424

CERTIFICATION
NOV 07 2011
WARREN W. SCHAEFER P.E.
P.E. NO. 44135

DRAWING NO. 1464
REV. A
SHEET NO. 11 OF 15

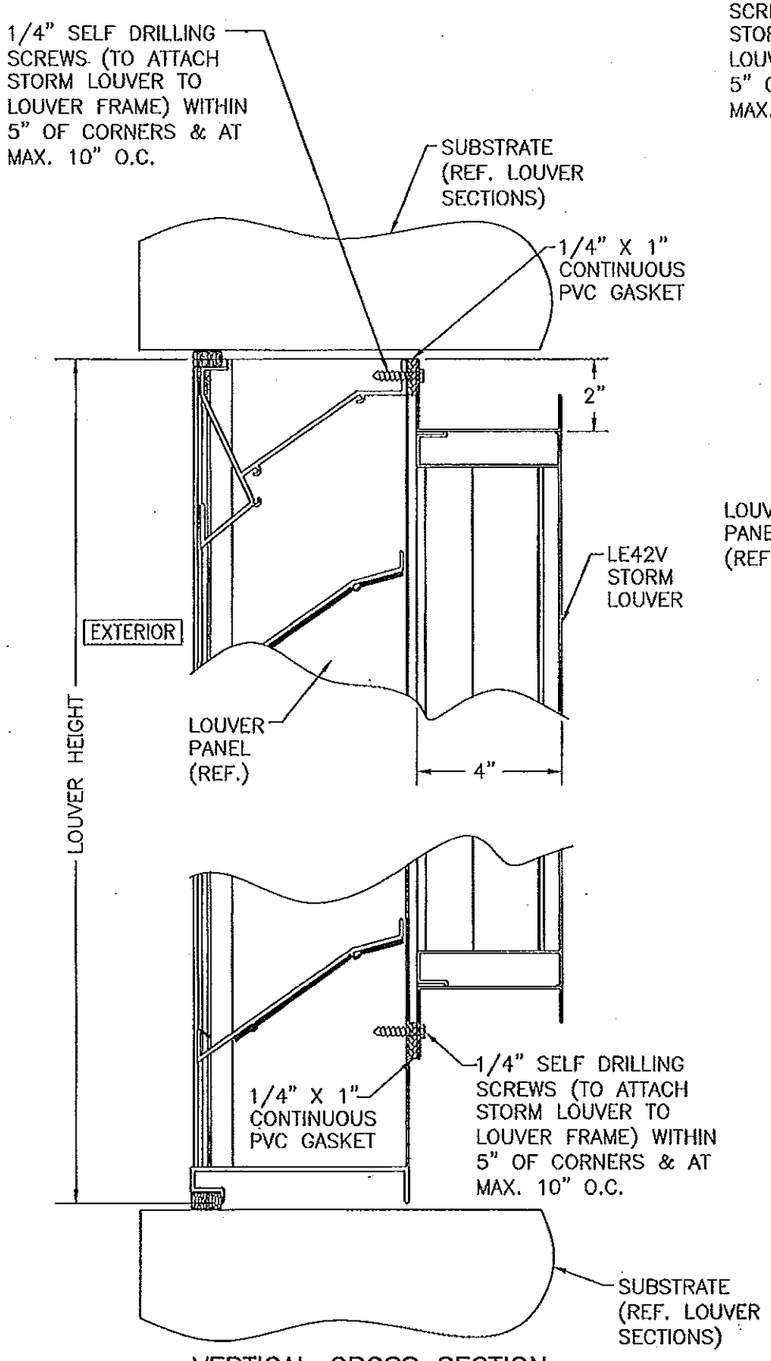

VERTICAL CROSS SECTION
LE42V STORM LOUVER DETAIL

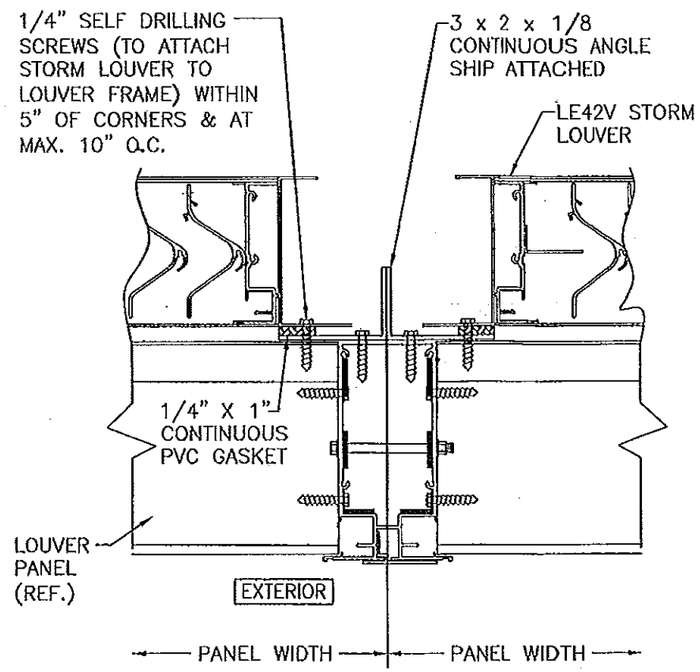

LE42V STORM LOUVER
SECTION AT MULLION

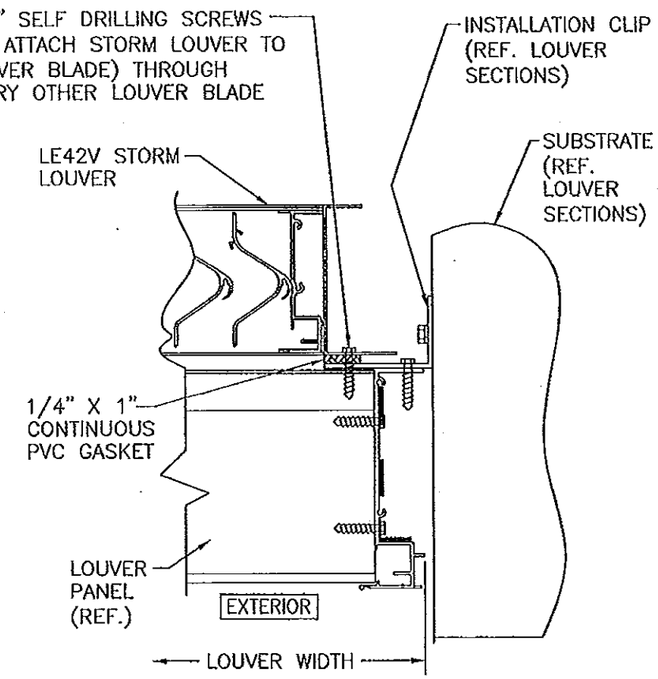

LE42V STORM LOUVER
JAMB DETAIL

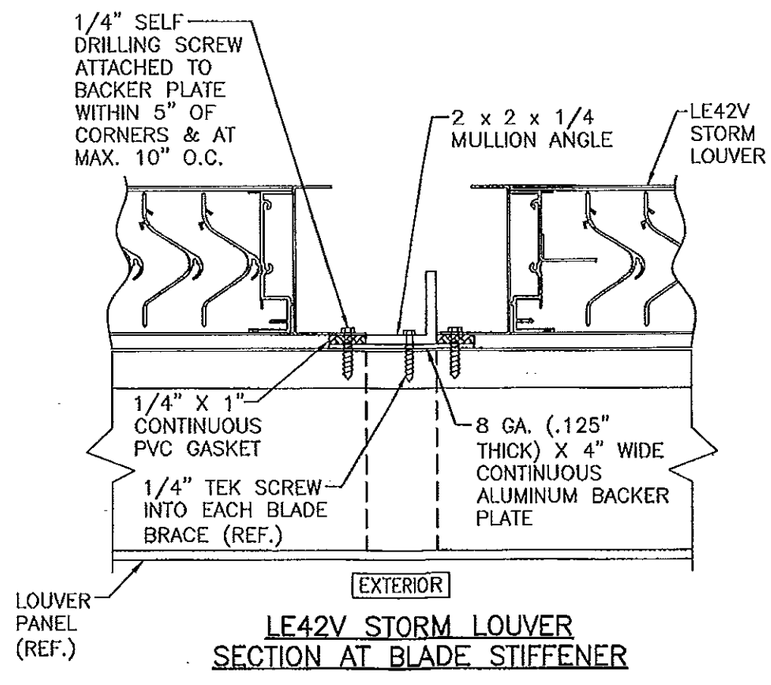

LE42V STORM LOUVER
SECTION AT BLADE STIFFENER

FOR LOUVER DETAILS, SEE SHEETS 1–9

PRODUCT RENEWED
as complying with the Florida Building Code
Acceptance No 13-1017.04
Expiration Date 04/22/2019
By
Miami Dade Product Control

PRODUCT REVISED
as complying with the Florida Building Code
Acceptance No 11-1117.09
Expiration Date 04/22/2014
By
Miami Dade Product Control

WARREN W. SCHAEFER LICENSE No. 44135 STATE OF FLORIDA PROFESSIONAL ENGINEER

DRAWN BY: W.R.M.	CHECKED BY: W.W.S.
PLOT: 1=4	DATE: 12/02/05

NO.	REVISION DESCRIPTION	BY	DATE

DRAWING TITLE: EA–64 LOUVER SYSTEM

MANUFACTURER: ARROW UNITED INDUSTRIES
450 RIVERSIDE DRIVE
WYALUSING, PA 18853
570–746–1888

CONSULTANTS: W. W. SCHAEFER ENGINEERING & CONSULTING, P.A. (CA 6809)
7480 150TH COURT NORTH
PALM BEACH GARDENS, FL 33418
PHONE: 561–744–3424

CERTIFICATION: NOV 07 2011
WARREN W. SCHAEFER, P.E.
P.E. NO. 44135

DRAWING NO. 1464 REV. A

SHEET NO. 12 OF 15

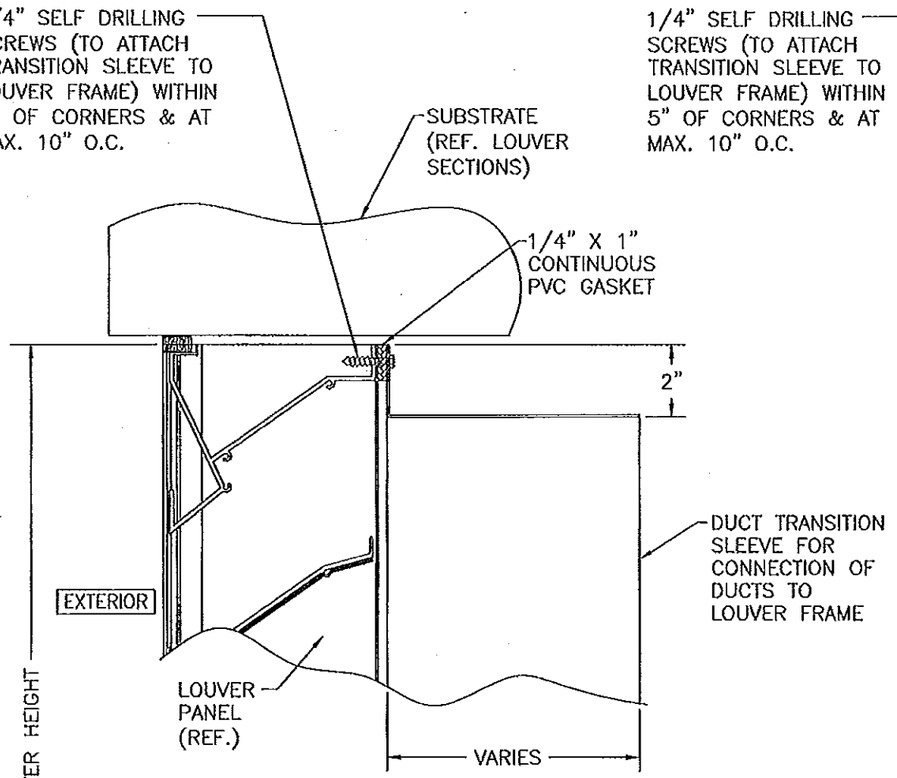

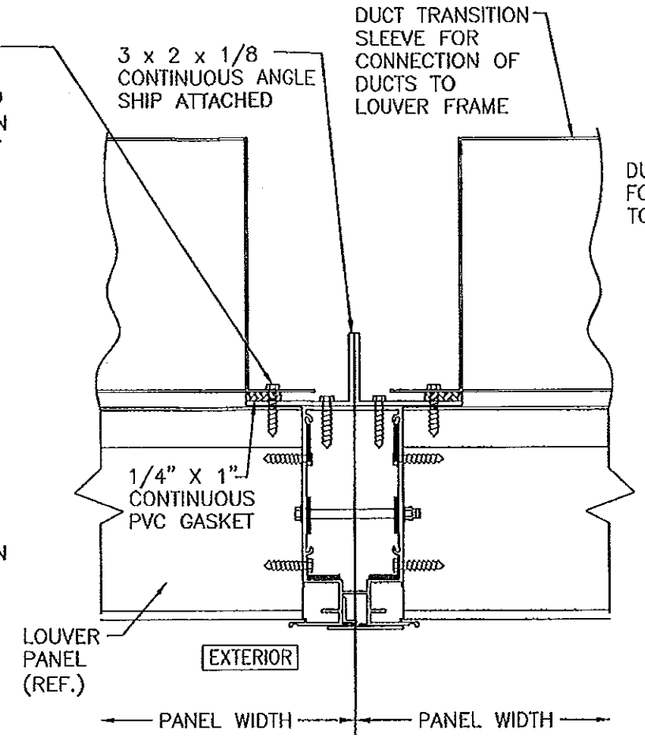

DUCT TRANSITION SLEEVE
SECTION AT MULLION

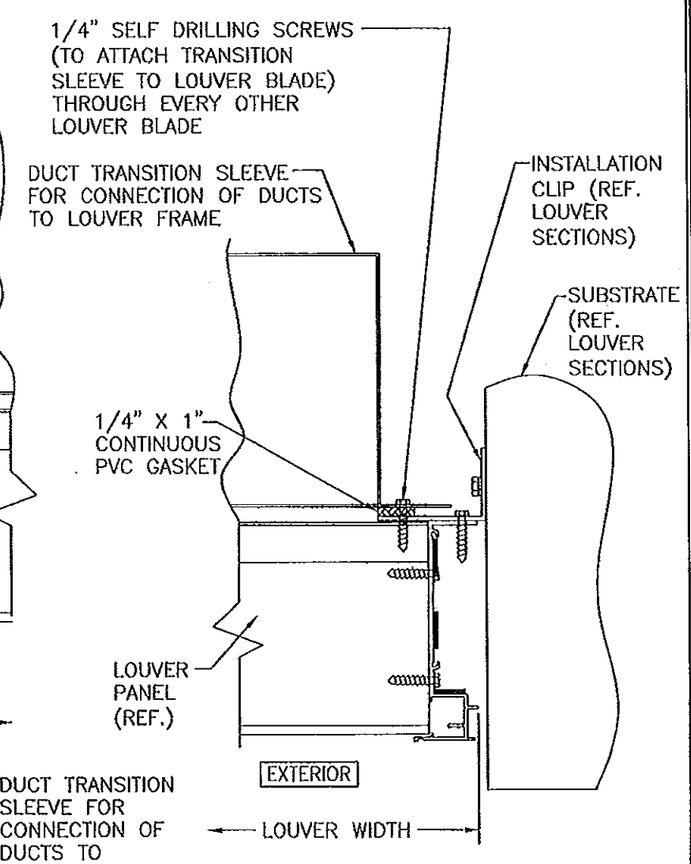

DUCT TRANSTION
SLEEVE JAMB DETAIL

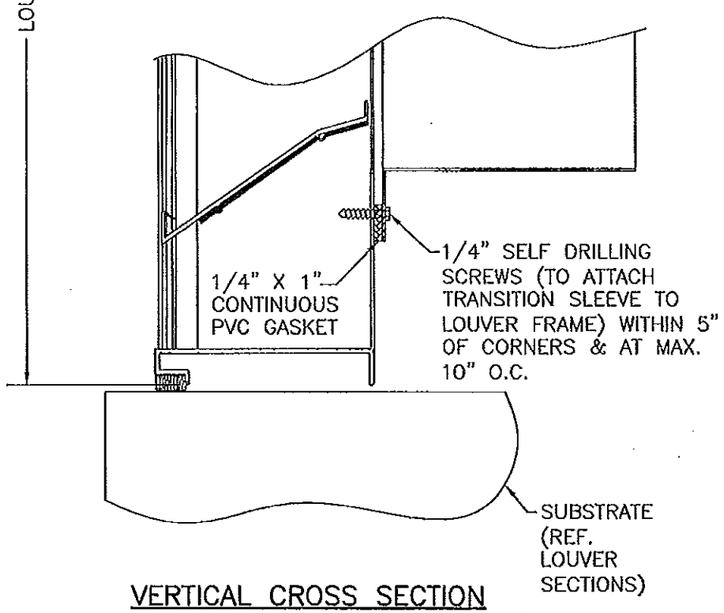

VERTICAL CROSS SECTION
DUCT TRANSITION SLEEVE DETAIL

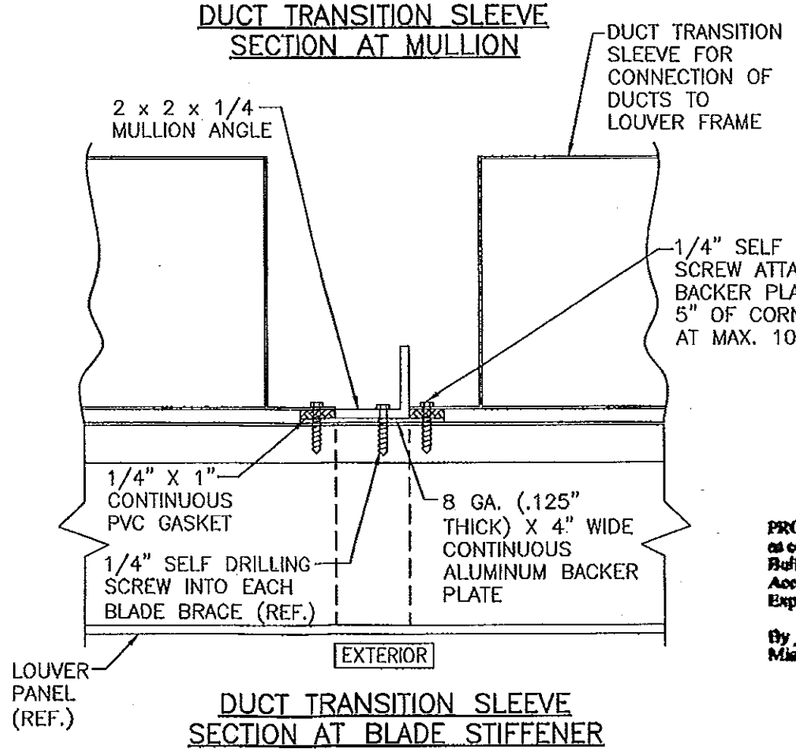

DUCT TRANSITION SLEEVE
SECTION AT BLADE STIFFENER

FOR LOUVER DETAILS, SEE SHEETS 1–9

PRODUCT RENEWED
as complying with the Florida Building Code
Acceptance No 13-1017.04
Expiration Date 04/22/2019
By
Miami Dade Product Control

PRODUCT REVISED
as complying with the Florida Building Code
Acceptance No 11-1117.09
Expiration Date 04/22/2019
By
Miami Dade Product Control

WARREN W. SCHAEFER LICENSE No. 44135 STATE OF FLORIDA PROFESSIONAL ENGINEER

DRAWN BY: W.R.M.	CHECKED BY: W.W.S.
PLOT: 1=4	DATE: 12/02/05

NO.	REVISION DESCRIPTION	BY	DATE

DRAWING TITLE: EA-64 LOUVER SYSTEM

MANUFACTURER: ARROW UNITED INDUSTRIES
450 RIVERSIDE DRIVE
WYALUSING, PA 18853
570-746-1888

CONSULTANTS: W. W. SCHAEFER ENGINEERING & CONSULTING, P.A. (CA 6809)
7480 150TH COURT NORTH
PALM BEACH GARDENS, FL 33418
PHONE: 561-744-3424

CERTIFICATION
NOV 07 2011
WARREN W. SCHAEFER P.E.
P.E. NO. 44135

DRAWING NO. 1464 | REV. A

SHEET NO. 13 OF 15

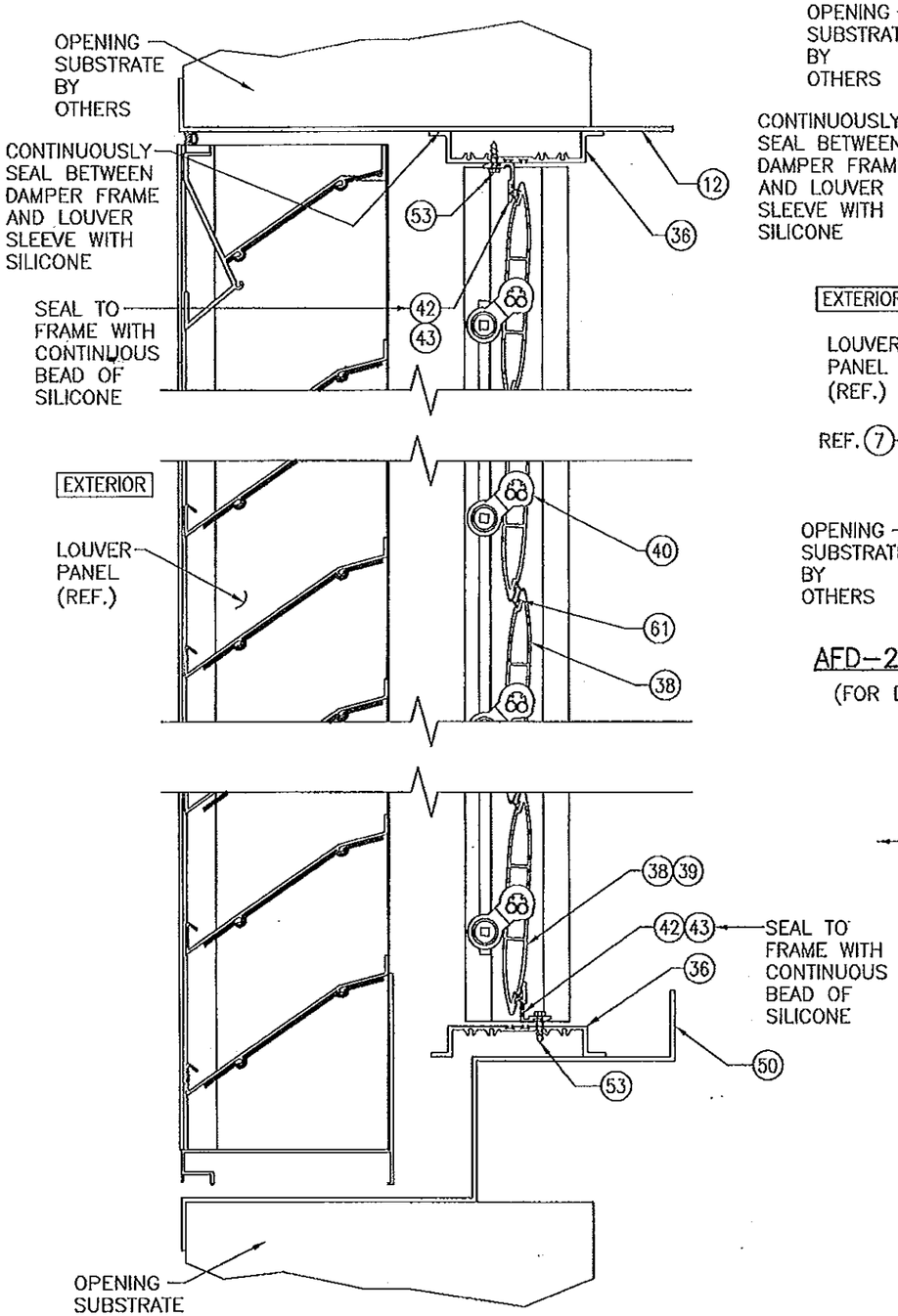

VERTICAL CROSS SECTION WITH AFD-20 DAMPER WHEN NO LOUVER MULLIONS EXIST

(DAMPER OPERATOR NOT SHOWN, IS PART OF THIS APPROVAL)

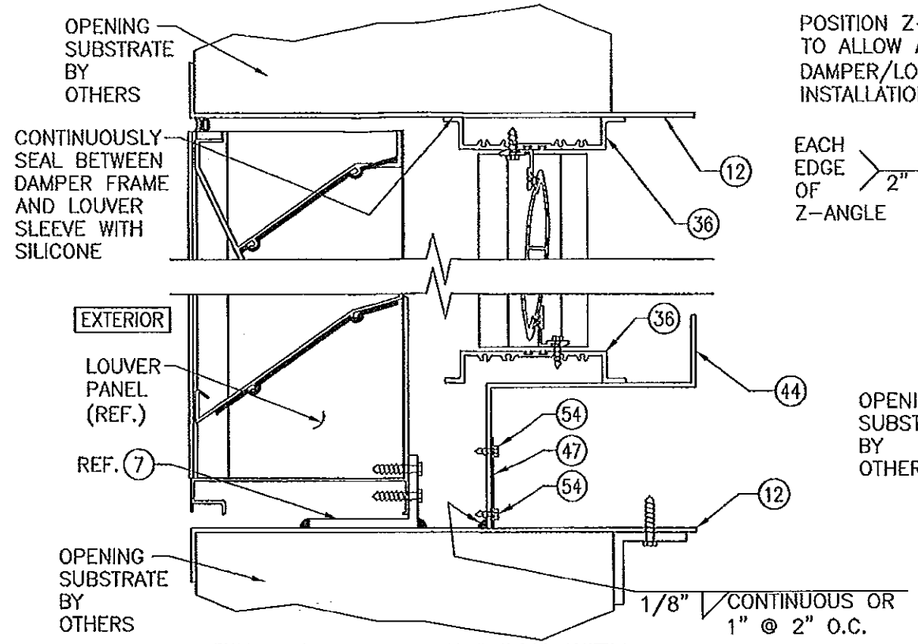

VERTICAL CROSS SECTION WITH AFD-20 DAMPER WHEN LOUVER MULLION EXISTS

(FOR DAMPER DETAIL NOT SHOWN, SEE OTHER VERTICAL CROSS SECTION ON THIS SHEET)

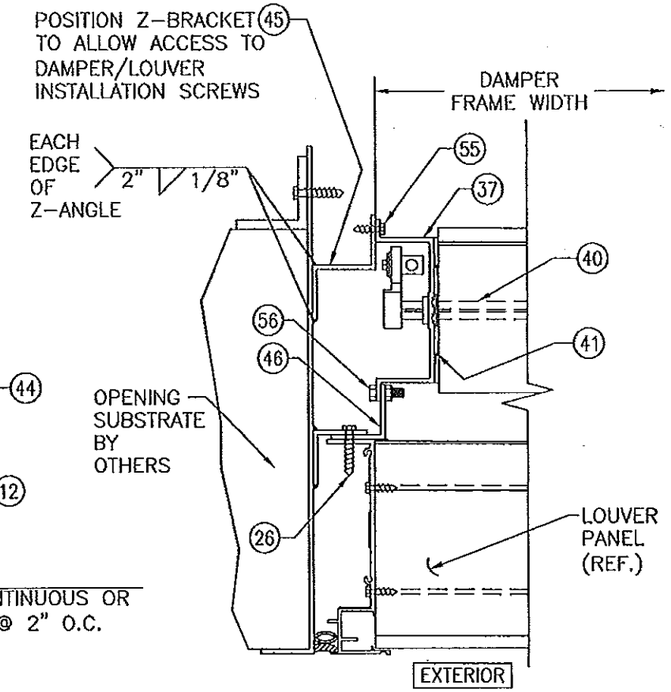

HORIZONTAL CROSS SECTION AFD-20 DAMPER DETAIL

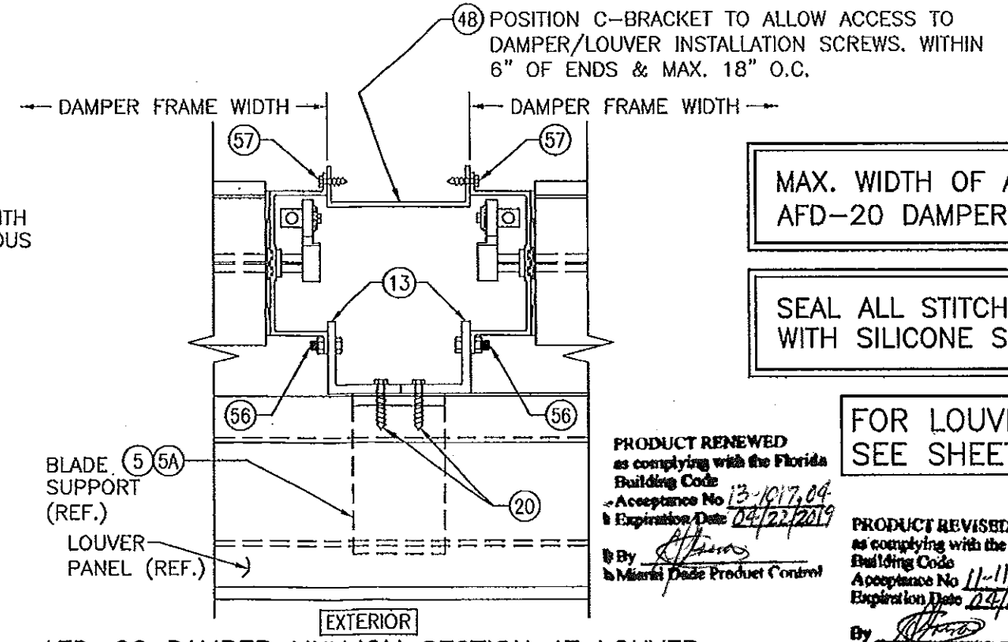

AFD-20 DAMPER MULLION SECTION AT LOUVER MID-SPAN PANEL

(FOR DAMPER DETAIL NOT SHOWN, SEE HORIZONTAL CROSS SECTION AFD-20 DAMPER DETAIL THIS SHEET)

MAX. WIDTH OF ANY SINGLE AFD-20 DAMPER PANEL IS 48"

SEAL ALL STITCH WELDED SEAMS WITH SILICONE SEALANT

FOR LOUVER DETAILS, SEE SHEETS 1-9

PRODUCT RENEWED
as complying with the Florida Building Code
Acceptance No 13-1017.04
Expiration Date 04/22/2019
By
Miami Dade Product Control

PRODUCT REVISED
as complying with the Florida Building Code
Acceptance No 11-1117.09
Expiration Date 04/22/2014
By
Miami Dade Product Control

WARREN W. SCHAEFER LICENSE No. 44135 STATE OF FLORIDA PROFESSIONAL ENGINEER

NOV 07 2011

WARREN W. SCHAEFER P.E. P.E. NO. 44135

NO.	REVISION DESCRIPTION	BY	DATE

DRAWN BY: W.R.M.
CHECKED BY: W.W.S.
PLOT: 1=4
DATE: 12/02/05

DRAWING TITLE: EA-64 LOUVER SYSTEM

MANUFACTURER: ARROW UNITED INDUSTRIES
450 RIVERSIDE DRIVE
WYALUSING, PA 18853
570-746-1888

CONSULTANTS: W. W. SCHAEFER ENGINEERING & CONSULTING, P.A. (CA 6809)
7480 150TH COURT NORTH
PALM BEACH GARDENS, FL 33418
PHONE: 561-744-3424

DRAWING NO. 1464
REV. A
SHEET NO. 14 OF 15

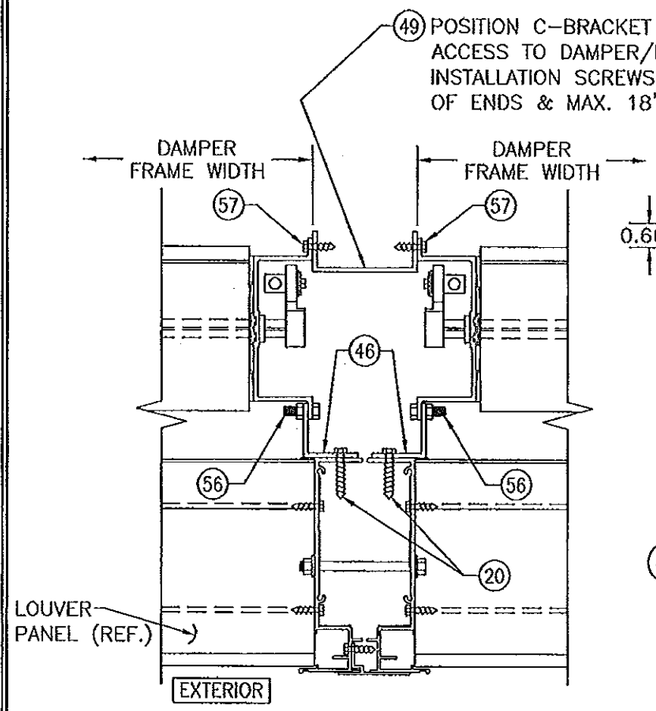

AFD-20 DAMPER MULLION SECTION AT LOUVER MULLION

(FOR DAMPER DETAIL NOT SHOWN, SEE OTHER DAMPER MULLION SECTION ON SHEET 14)

MAX. FRAME WIDTH OF ANY SINGLE AFD-20 DAMPER PANEL IS 48"

SEAL ALL STITCH WELDED SEAMS WITH SILICONE SEALANT

FOR LOUVER DETAILS, SEE SHEETS 1-9

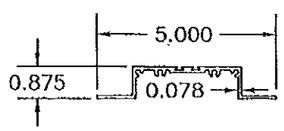

(36) HEAD & SILL FRAME

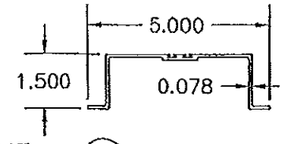

(37) JAMB

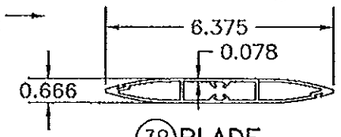

(38) BLADE

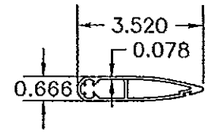

(39) HALF-BLADE

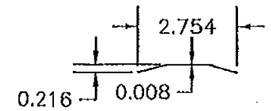

(41) JAMB SEAL

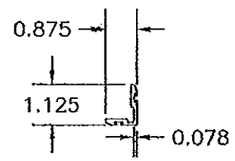

(42) BLADE STOP

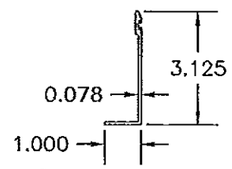

(43) BLADE STOP (OPTIONAL)

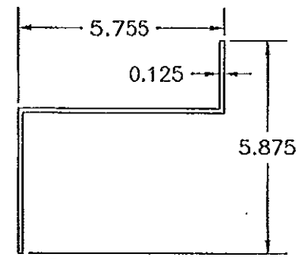

(44) SILL PAN

(FOR USE WITH 2-PIECE SILL PAN CONDITION)

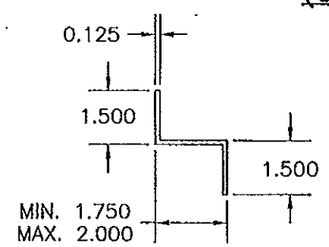

(45) Z-BRACKET

LENGTH = 3"

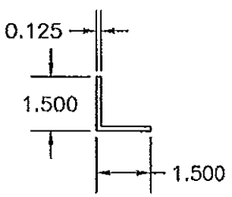

(46) CONTINUOUS SUPPORT ANGLE

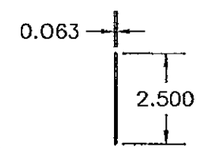

(47) COVER PLATE

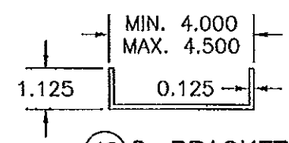

(48) C-BRACKET

LENGTH = 3"

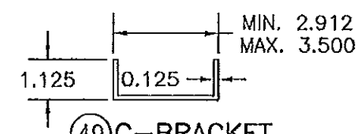

(49) C-BRACKET

LENGTH = 3"

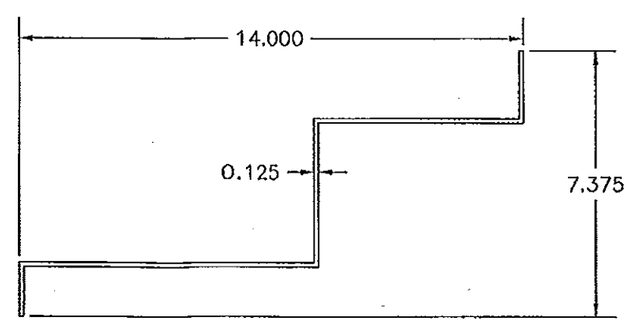

(50) 1-PIECE SILL PAN

PRODUCT RENEWED
as complying with the Florida Building Code
Acceptance No 13-1017.04
Expiration Date 04/22/2019
By
Miami Dade Product Control

PRODUCT REVISED
as complying with the Florida Building Code
Acceptance No 11-1117.09
Expiration Date 04/22/2014
By
Miami Dade Product Control

WARREN W. SCHAEFER LICENSE No. 44135 STATE OF FLORIDA PROFESSIONAL ENGINEER

NOV 07 2011

AFD-20 DAMPER (ALL PARTS BY ARROW UNITED INDUSTRIES)

ITEM #	ITEM DESCRIPTION	MANUFACTURER/NOTES
	PARTS	
36	HEAD & SILL FRAME	6063-T5 ALUMINUM
37	JAMB	6063-T6 ALUMINUM
38	BLADE	6063-T5 ALUMINUM
39	HALF-BLADE	6063-T5 ALUMINUM
40	BLADE LINKAGE ASSEMBLY	BY AWV
41	JAMB SEAL	304 STAINLESS STEEL
42	BLADE STOP	6063-T5 ALUMINUM
43	BLADE STOP (OPTIONAL)	6063-T5 ALUMINUM
44	SILL PAN	5052-H32 ALUMINUM
45	Z-BRACKET	5052-H32 ALUMINUM
46	CONTINUOUS SUPPORT ANGLE	6063-T5 ALUMINUM
47	C-BRACKET	5052-H32 ALUMINUM
48	CHANNEL BRACKET	5052-H32 ALUMINUM
49	C-BRACKET	5052-H32 ALUMINUM
50	1-PIECE SILL PAN	5052-H32 ALUMINUM
	MISC. FASTENERS	
53	NO. 8 X 3/4" SELF DRILLING SCREW	WITHIN 2" OF CORNERS & MAX. 12" O.C.
54	NO. 8 X 1/2" SELF DRILLING SCREW	4 PER PLATE
55	NO. 8 X 3/4" SELF DRILLING SCREW	2 PER Z-BRACKET
56	1/4-20 X 3/4" BOLT & NUT	WITHIN 1 1/2" FROM ENDS & MAX. 4" O.C.
57	NO. 8 X 3/4" SELF DRILLING SCREW	2 PER CHANNEL BRACKET
	SEALS & SEALANTS	
61	BLADE SEAL	SOLID SILICONE

NO.	REVISION DESCRIPTION	BY	DATE

DRAWN BY: W.R.M.
CHECKED BY: W.W.S.
PLOT: 1=4
DATE: 12/02/05

DRAWING TITLE: EA-64 LOUVER SYSTEM

MANUFACTURER: ARROW UNITED INDUSTRIES
450 RIVERSIDE DRIVE
WYALUSING, PA 18853
570-746-1888

CONSULTANTS: W. W. SCHAEFER ENGINEERING & CONSULTING, P.A. (CA 6809)
7480 150TH COURT NORTH
PALM BEACH GARDENS, FL 33418
PHONE: 561-744-3424

CERTIFICATION
WARREN W. SCHAEFER P.E.
P.E. NO. 44135

DRAWING NO. 1464
REV. A
SHEET NO. 15 OF 15