MIAMI-DADE COUNTY
DEPARTMENT OF REGULATORY AND ECONOMIC RESOURCES (RER)
BOARD AND CODE ADMINISTRATION DIVISION

MIAMI-DADE COUNTY
PRODUCT CONTROL SECTION
11805 SW 26 Street, Room 208
T (786) 315-2590 F (786) 315-2599
www.miamidade.gov/economy

NOTICE OF ACCEPTANCE (NOA)

Aldora Aluminum & Glass Products, Inc.
11500 Miramar Parkway, Suite 300
Miramar, FL 33025

SCOPE:

This NOA is being issued under the applicable rules and regulations governing the use of construction materials. The documentation submitted has been reviewed and accepted by Miami-Dade County RER - Product Control Section to be used in Miami Dade County and other areas where allowed by the Authority Having Jurisdiction (AHJ).

This NOA shall not be valid after the expiration date stated below. The Miami-Dade County Product Control Section (In Miami Dade County) and/or the AHJ (in areas other than Miami Dade County) reserve the right to have this product or material tested for quality assurance purposes. If this product or material fails to perform in the accepted manner, the manufacturer will incur the expense of such testing and the AHJ may immediately revoke, modify, or suspend the use of such product or material within their jurisdiction. RER reserves the right to revoke this acceptance, if it is determined by Miami-Dade County Product Control Section that this product or material fails to meet the requirements of the applicable building code.

This product is approved as described herein, and has been designed to comply with the Florida Building Code, including the High Velocity Hurricane Zone.

DESCRIPTION: Series "SMI–090" Aluminum Window Wall System – N.I.

APPROVAL DOCUMENT: Drawing No. **W10–04**, titled "Series SMI–090 Alum Window Wall (N.I.)", sheets 1 through 10 of 10, dated 02/05/10, with revision D dated 12/09/13, prepared by Al-Farooq Corporation, signed and sealed by Javad Ahmad, P.E., bearing the Miami–Dade County Product Control Revision stamp with the Notice of Acceptance number and expiration date by the Miami–Dade County Product Control Section.

MISSILE IMPACT RATING: None.

LABELING: Each unit shall bear a permanent label with the manufacturer's name or logo, city, state, model/series, and following statement: "Miami-Dade County Product Control Approved", unless otherwise noted herein.

RENEWAL of this NOA shall be considered after a renewal application has been filed and there has been no change in the applicable building code negatively affecting the performance of this product.

TERMINATION of this NOA will occur after the expiration date or if there has been a revision or change in the materials, use, and/or manufacture of the product or process. Misuse of this NOA as an endorsement of any product, for sales, advertising or any other purposes shall automatically terminate this NOA. Failure to comply with any section of this NOA shall be cause for termination and removal of NOA.

ADVERTISEMENT: The NOA number preceded by the words Miami-Dade County, Florida, and followed by the expiration date may be displayed in advertising literature. If any portion of the NOA is displayed, then it shall be done in its entirety.

INSPECTION: A copy of this entire NOA shall be provided to the user by the manufacturer or its distributors and shall be available for inspection at the job site at the request of the Building Official.

This NOA **revises NOA# 12-0201.08** and consists of this page 1 and evidence pages E-1 and E-2, as well as approval document mentioned above.

The submitted documentation was reviewed by **Manuel Perez, P.E.**

MIAMI-DADE COUNTY APPROVED

12/11/13

Aldora Aluminum & Glass Products, Inc.

NOTICE OF ACCEPTANCE: EVIDENCE SUBMITTED

A. DRAWINGS

1. Manufacturer's die drawings and sections.
2. Drawing No **W10–04**, titled "**Series SMI–090 Alum Window Wall (N.I.)**", sheets 1 through 10 of 10, dated 02/05/10, with revision D dated 12/09/13, prepared by Al-Farooq Corporation, signed and sealed by Javad Ahmad, P.E.

B. TESTS

1. Test reports on: 1) Air Infiltration Test, per FBC, TAS 202–94
   2) Uniform Static Air Pressure Test, Loading per FBC TAS 202–94
   3) Water Resistance Test, per FBC, TAS 202–94

   along with marked–up drawings and installation diagram of a window wall system, prepared by Fenestration Testing Laboratory, Inc., Test Report No. **FTL-5964**, dated August 06, 2009, signed and sealed by Julio E. Gonzalez, P.E.
   (Submitted under previous NOA#10-0401.03)

C. CALCULATIONS

1. Anchor verification calculations and structural analysis, complying with FBC–2007, prepared by Al–Farooq Corporation, dated March 03, 2010, signed and sealed by Javad Ahmad, P.E.
   (Submitted under previous NOA#10-0401.03)
2. Glazing complies with **ASTM E1300-04**

D. QUALITY ASSURANCE

1. Miami-Dade Department of Regulatory and Economic Resources (RER)

E. MATERIAL CERTIFICATIONS

1. None.

Manuel Perez, P.E.
Product Control Examiner
NOA No. 13-1021.06
Expiration Date: June 02, 2015
Approval Date: December 19, 2013

NOTICE OF ACCEPTANCE: EVIDENCE SUBMITTED

F. STATEMENTS

1. Statement letter of conformance, complying with **FBC-2010**, and of no financial interest, dated 08/16/13, signed and sealed by Javad Ahmad, P.E.
2. Laboratory compliance letter for Test Report No. **FTL 5964**, issued by Fenestration Testing Laboratory, Inc., dated September 09, 2009, signed and sealed by Julio E. Gonzalez, P.E.
   (Submitted under previous NOA#10-0401.03)
3. Statement letter dated 08/21/13, issued by Aldora Aluminum & Glass Products, Inc. of legally purchase of asset and rights of NOA # **12-0201.08** from SMI Aluminum System, LLC and requesting that said NOA be issued under their name, signed by Manny Valladares, for and on behalf of Aldora Aluminum & Glass Products, Inc.
4. Letter from owners of existing NOA stating that they have sold all assets to the applicant, that they no longer manufacture the product and relinquish their rights to the current NOA # **12-0201.08**, dated 08/21/13, signed by Mr. Manny Valladares, for and on behalf of SMI Aluminum Systems, LLC.
5. Assignment & Assumption agreement dated July 26, 2013 between Aldora Holdings LLC, SMI Aluminum Systems, LLC, Architectural Glass Products, LLC (each an "Assignor" and collectively, the "Assignors") and Aldora Holdco, Inc. (the "Assignee") signed by Leon Silverstein, Aldora Holdings LLC manager; Leon Silverstein, SMI Aluminum Systems, LLC, manager; Leon Silverstein, Architectural Glass Products, LLC manager and Scott Hauncher, VP Aldora Holdco, Inc.
6. Bill of Sale dated July 26, 2013, delivered by Aldora Holdco, Inc. transferring assets to Aldora Aluminum & Glass Products, Inc., signed by Mr. Scott Hauncher, Vice President, Aldora Holdco, Inc.

G. OTHERS

1. Notice of Acceptance No. **12-0201.08**, issued to SMI Aluminum Systems, LLC for their Series "SMI-090" Aluminum Window Wall System - N.I., approved on 04/19/12 and expiring on 06/02/15.

Manuel Perez, P.E.
Product Control Examiner
NOA No. 13-1021.06
Expiration Date: June 02, 2015
Approval Date: December 19, 2013

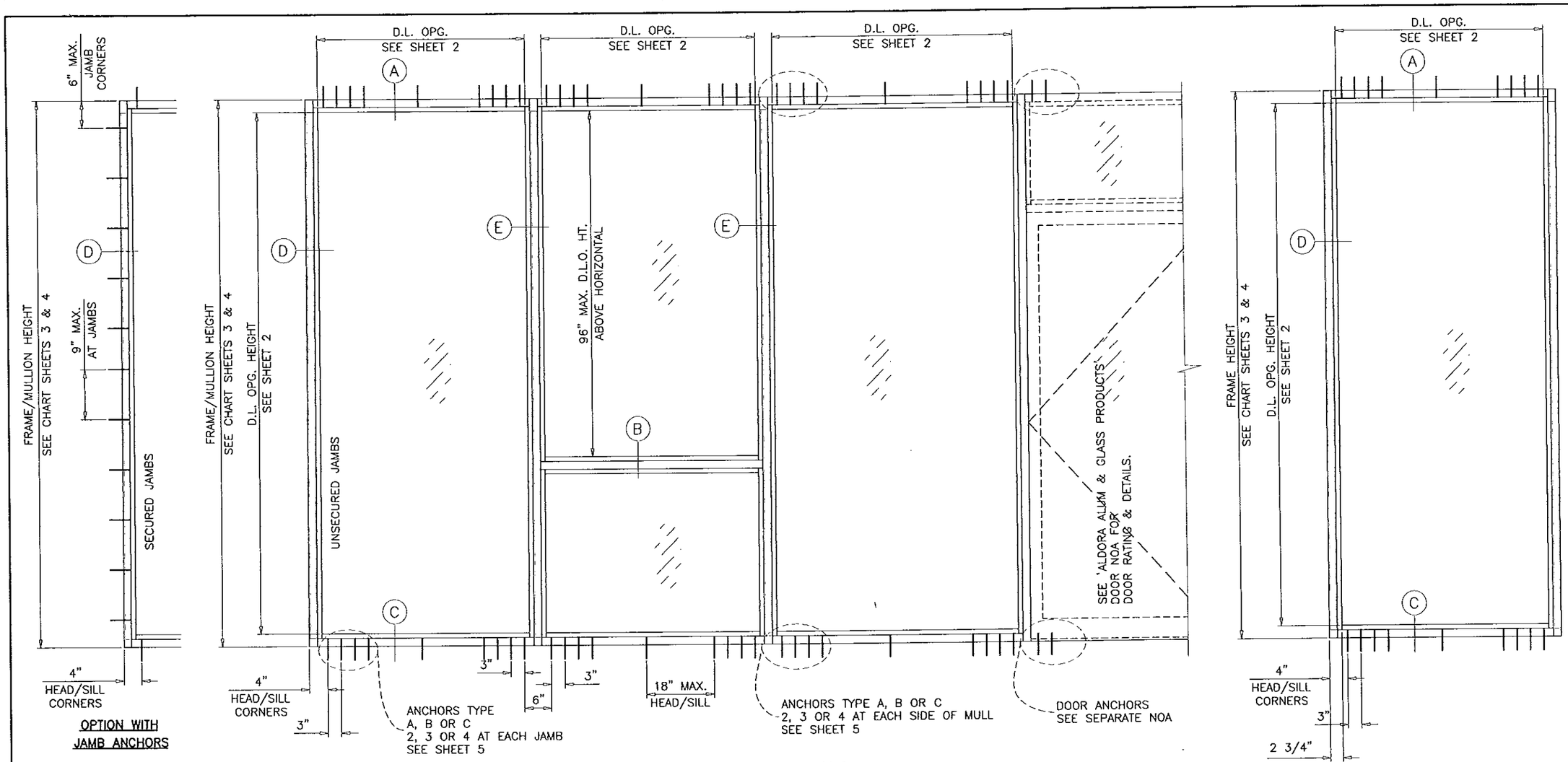

TYPICAL ELEVATIONS

SERIES SMI-090 ALUMINUM WINDOW WALL

THIS SYSTEM MAY BE USED IN CONJUNCTION WITH MIAMI-DADE COUNTY APPR'D DOORS.
LOWER DESIGN PRESSURE FROM STOREFRONT OR DOOR APPROVAL WILL APPLY TO ENTIRE SYSTEM.

CODE REQUIREMENTS FOR SAFEGUARDS MUST BE OBSERVED.

THIS PRODUCT HAS BEEN DESIGNED AND TESTED TO COMPLY WITH THE REQUIREMENTS OF THE FLORIDA BUILDING CODE INCLUDING HIGH VELOCITY HURRICANE ZONE (HVHZ).

WOOD BUCKS BY OTHERS, MUST BE ANCHORED PROPERLY TO TRANSFER LOADS TO THE STRUCTURE.

ANCHORS SHALL BE AS LISTED, SPACED AS SHOWN ON DETAILS, ANCHORS EMBEDMENT TO BASE MATERIAL SHALL BE BEYOND WALL DRESSING OR STUCCO.

ANCHORING OR LOADING CONDITIONS NOT SHOWN IN THESE DETAILS ARE NOT PART OF THIS APPROVAL.

A LOAD DURATION INCREASE IS USED IN DESIGN OF ANCHORS INTO WOOD ONLY.

MATERIALS INCLUDING BUT NOT LIMITED TO STEEL/METAL SCREWS, THAT COME INTO CONTACT WITH OTHER DISSIMILAR MATERIALS SHALL MEET THE REQUIREMENTS OF THE FLORIDA BLDG. CODE SECTION 2003.8.4.

INSTRUCTIONS:

USE CHARTS AS FOLLOWS.

STEP 1 DETERMINE DESIGN WIND LOAD REQUIREMENT BASED ON WIND VELOCITY, BLDG. HEIGHT, WIND ZONE USING APPLICABLE ASCE 7 STANDARD.

STEP 2 SEE CHARTS ON SHEET 2 FOR DESIGN LOAD CAPACITY OF DESIRED GLASS SIZE.

STEP 3 CHECK MULLION CAPACITY FOR A GIVEN SPACING AND HEIGHT USING CHARTS ON SHEET 3 & 4. THE CAPACITY SHOULD EXCEED THE DESIGN LOAD.

STEP 4 USING CHART ON SHEETS 5 SELECT ANCHOR OPTION WITH DESIGN RATING MORE THAN DESIGN LOAD SPECIFIED IN STEP 1 ABOVE.

STEP 5 THE LOWEST VALUE RESULTING FROM STEPS 2, 3 AND 4 SHALL APPLY TO ENTIRE SYSTEM.

THIS SYSTEM IS NOT RATED FOR IMPACT.

INSTALLATION OF THIS PRODUCT IN THE HVHZ AREA REQUIRES THE USE OF APPROVED SHUTTERS OR EXTERNAL PROTECTION DEVICES COMPLYING WITH HVHZ REQUIREMENTS.

INSTALLATION OF THIS SYSTEM OUTSIDE THE HVHZ AREA MUST MEET THE APPLICABLE REQUIREMENTS FOR WIND BORNE DEBRIS PROTECTION.

Engr: JAVAD AHMAD
CIVIL.
FLA. PE # 70592
C.A.N. 3538
DEC 09 2013

PRODUCT REVISED
as complying with the Florida
Building Code
Acceptance No 13-1021.06
Expiration Date June 2, 2015
By Manuel Perez
Miami Dade Product Control

AL-FAROOQ CORPORATION
ENGINEERS & PRODUCT DEVELOPMENT
1235 S.W. 87 AVE
MIAMI, FLORIDA 33174
TEL (305) 264-8100 FAX. (305) 262-6978
COMP-ANL\W10-04SM

SERIES SMI-090 ALUM WINDOW WALL (N.I.)

Aldora Aluminum & Glass Products, Inc.
11500 MIRAMAR PARKWAY SUITE 300
MIRAMAR, FL. 33025
TEL. (305) 888-6288 FAX. (305) 888-6289

revisions:

no	date	by	description
A	04.21.10		REV. PER BCCO COMMENTS
B	10.21.11		UPDATED TO 2010 FBC
C	08.12.13		MANUF. NAME REV.
D	12.09.13		MANUF. NAME REV.

date: 02-05-10
scale: 1/2"=1'-0"
dr. by: HAMID
chk. by:

drawing no.
W10-04

GLASS LOAD CAPACITY - PSF			
NOMINAL DIMS.		GLASS TYPES 'A'	GLASS TYPES 'A1'
D.L.O. WIDTH	D.L.O. HEIGHT	EXT.(+) INT.(−)	EXT.(+) INT.(−)
26-1/4"	84-1/2"	120.0	120.0
32-1/4"		120.0	120.0
38-1/4"		120.0	120.0
44-1/4"		120.0	120.0
50-1/4"		120.0	120.0
56-1/4"		120.0	120.0
26-1/4"	90-1/2"	120.0	120.0
32-1/4"		120.0	120.0
38-1/4"		120.0	120.0
44-1/4"		120.0	120.0
50-1/4"		120.0	120.0
26-1/4"	96-1/2"	120.0	120.0
32-1/4"		120.0	120.0
38-1/4"		120.0	120.0
44-1/4"		114.2	120.0
50-1/4"		111.1	120.0
26-1/4"	102-1/2"	120.0	120.0
32-1/4"		120.0	120.0
38-1/4"		120.0	120.0
44-1/4"		106.5	120.0
26-1/4"	108-1/2"	120.0	120.0
32-1/4"		120.0	120.0
38-1/4"		115.7	120.0
44-1/4"		100.4	120.0
26-1/4"	114-1/2"	120.0	120.0
32-1/4"		120.0	120.0
38-1/4"		112.6	120.0
44-1/4"		95.2	120.0
26-1/4"	120-1/2"	120.0	120.0
32-1/4"		120.0	120.0
38-1/4"		110.1	120.0
26-1/4"	126-1/2"	120.0	120.0
32-1/4"		120.0	120.0
38-1/4"		108.0	120.0
26-1/4"	132-1/2"	120.0	120.0
32-1/4"		120.0	120.0
26-1/4"	138-1/2"	120.0	120.0
32-1/4"		120.0	120.0

NOTE:
INTERPOLATION BETWEEN WIDTHS OR HEIGHTS ALLOWED.

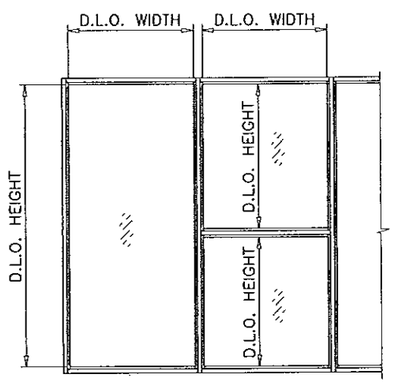

D.L.O. HEIGHT = FRAME HEIGHT − 5.5" (WINDOW WALL SYS. W/O HORIZONTALS)
D.L.O. WIDTH = FRAME WIDTH − 5.5" (SINGLE PANEL)
MULLION CL TO CL SPACING − 3.75" (MULTIPLE PANELS)

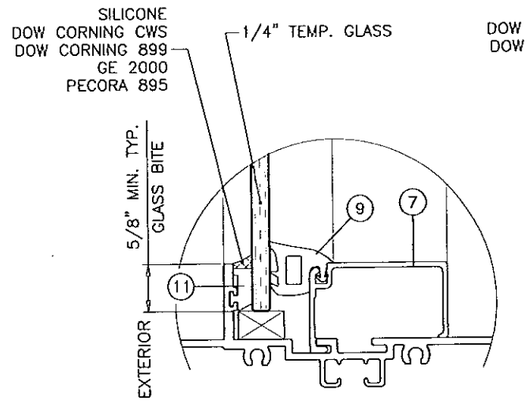

GLASS TYPE 'A'
MONOLITHIC GLASS

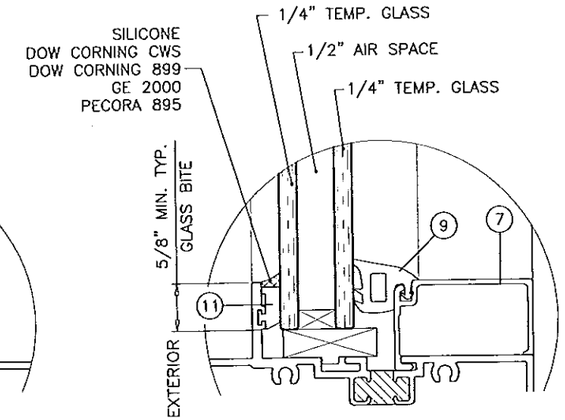

GLASS TYPE 'A1'
1" OVERALL INSUL. GLASS

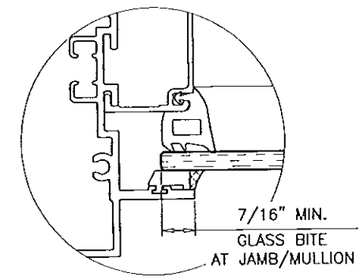

GLAZING OPTIONS

INTERIOR GLAZED

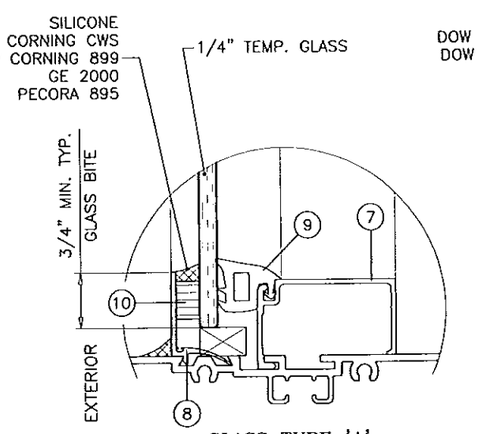

GLASS TYPE 'A'
MONOLITHIC GLASS

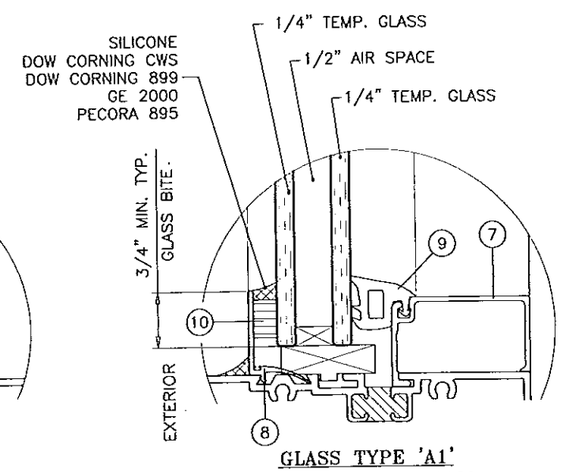

GLASS TYPE 'A1'
1" OVERALL INSUL. GLASS

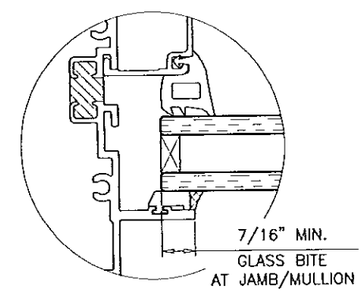

GLAZING OPTIONS

EXTERIOR GLAZED

NOTE:
WINDOW WALL FRAMES AT INSULATED GLASS OPTION MAY BE WITH OR WITHOUT THERMAL BREAK.

1/2" AIR SPACE CONSISTING OF:
SPACER:
ALUMINUM BOX SPACER AROUND THE PERIMETER OF THE GLASS.
PERIMETER SEALANT:
SILICONE
DOW CORNING CWS
DOW CORNING 899
GE 2000
PECORA 895

NOTE:
GLASS CAPACITIES ON THIS SHEET ARE BASED ON ASTM E1300-04/09 (3 SEC. GUSTS).

GLASS

Engr: JAVAD AHMAD
CIVIL
FLA. PE # 70592
C.A.N. 3538
DEC 0 2013

PRODUCT REVISED
as complying with the Florida Building Code
Acceptance No 13-1021.06
Expiration Date June 7, 2015
By Manuel Lara
Miami Dade Product Control

AL-FAROOQ CORPORATION
ENGINEERS & PRODUCT DEVELOPMENT
1235 S.W. 87 AVE
MIAMI, FLORIDA 33174
TEL. (305) 264-8100 FAX. (305) 262-6978
COMP-ANL\W10-04SM

SERIES SMI-090 ALUM WINDOW WALL (N.I.)

Aldora Aluminum & Glass Products, Inc.
11500 MIRAMAR PARKWAY SUITE 300
MIRAMAR, FL. 33025
TEL. (305) 888-6288 FAX. (305) 888-6289

revisions:

no	date	by	description
A	04.21.10		REV. PER BCCO COMMENTS
B	10.21.11		UPDATED TO 2010 FBC
C	08.12.13		MANUF. NAME REV.
D	12.09.13		MANUF. NAME REV.

date: 02-05-10
scale: 1/2" = 1"
dr. by: HAMID
chk. by:

drawing no.
W10-04

DESIGN LOAD CAPACITY – PSF
JAMB/MULLION WITHOUT INTERMEDIATE HORIZONTALS

NOMINAL DIMS.		JAMB 'J1' MULLION 'M1'	JAMB 'J2' MULLION 'M2'	JAMB 'J3' MULLION 'M3'
WIDTH (W)	FRAME HEIGHT	EXT. (+) INT. (–)	EXT. (+) INT. (–)	EXT. (+) INT. (–)
30"	78"	120.0	120.0	120.0
36"		112.3	120.0	120.0
42"		98.9	120.0	120.0
48"		89.5	120.0	120.0
54"		82.8	120.0	120.0
60"		–	120.0	120.0
30"	84"	111.7	120.0	120.0
36"		94.9	120.0	120.0
42"		83.2	120.0	120.0
48"		74.9	120.0	120.0
54"		68.8	120.0	120.0
60"		–	120.0	120.0
30"	90"	91.2	120.0	120.0
36"		77.5	120.0	120.0
42"		68.1	120.0	120.0
48"		61.3	120.0	120.0
54"		–	120.0	120.0
60"		–	–	120.0
30"	96"	74.7	120.0	120.0
36"		63.4	120.0	120.0
42"		55.5	120.0	120.0
48"		49.8	117.1	120.0
54"		–	106.7	120.0
60"		–	–	120.0
30"	102"	62.0	120.0	120.0
36"		52.5	120.0	120.0
42"		45.8	113.1	120.0
48"		–	100.8	120.0
54"		–	–	114.0
30"	108"	52.0	120.0	120.0
36"		44.0	113.2	120.0
42"		38.3	98.4	120.0
48"		–	87.5	111.1
30"	114"	44.1	116.6	120.0
36"		37.2	98.1	120.0
42"		–	85.1	111.6
48"		–	–	99.0
30"	120"	37.7	99.7	120.0
36"		31.8	83.8	115.7
42"		–	72.6	100.2
48"		–	–	88.8
30"	126"	32.5	86.0	120.0
36"		–	72.2	104.7
42"		–	–	90.6
30"	132"	–	74.7	113.3
36"		–	62.7	95.1
42"		–	–	82.3
30"	138"	–	65.3	103.6
36"		–	54.7	86.9
30"	144"	–	57.4	95.0
36"		–	48.1	79.6

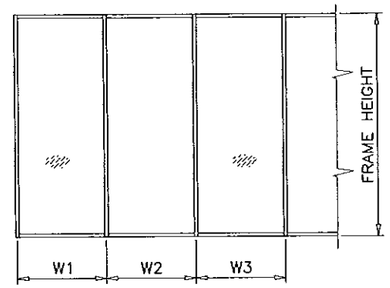

WIDTH (W) = W1
AT FRAME JAMB

WIDTH (W) = $\frac{W2 + W3}{2}$
AT FRAME MULLION

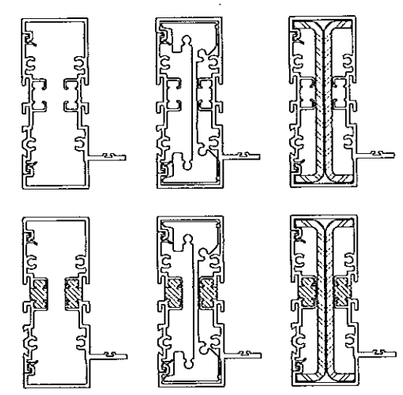

JAMB 'J1' JAMB 'J2' JAMB 'J3'

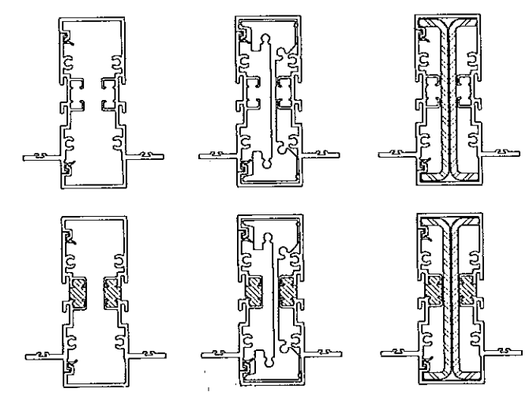

MULLION 'M1' MULLION 'M2' MULLION 'M3'

NOTE:
INTERPOLATION BETWEEN WIDTHS OR HEIGHTS ALLOWED.

MULLIONS

Engr: JAVAD AHMAD
CIVIL
FLA. PE # 70592
C.A.N. 4538

DEC 3 0 2013

PRODUCT REVISED
as complying with the Florida
Building Code
Acceptance No 13-1021.06
Expiration Date June 2, 2015
By Manuel Diaz
Miami Dade Product Control

AL-FAROOQ CORPORATION
ENGINEERS & PRODUCT DEVELOPMENT
1235 S.W. 87 AVE
MIAMI, FLORIDA 33174
TEL. (305) 264-8100 FAX. (305) 262-6978

COMP-ANL\W10-04SM

SERIES SMI-090 ALUM WINDOW WALL (N.I.)

Aldora Aluminum & Glass Products, Inc.
11500 MIRAMAR PARKWAY SUITE 300
MIRAMAR, FL. 33025
TEL. (305) 888-6288 FAX. (305) 888-6289

revisions:

no	date	by	description
A	04.21.10		NO CHANGE THIS SHEET
B	10.21.11		NO CHANGE THIS SHEET
C	08.12.13		MANUF. NAME REV.
D	12.09.13		MANUF. NAME REV.

date: 02-05-10
scale: –
dr. by: HAMID
chk. by:

drawing no.
W10-04

DESIGN LOAD CAPACITY – PSF
JAMB/MULLION WITH INTERMEDIATE HORIZONTALS

NOMINAL DIMS.		JAMB 'J1' MULLION 'M1'	JAMB 'J2' MULLION 'M2'	JAMB 'J3' MULLION 'M3'
WIDTH (W)	FRAME HEIGHT	EXT. (+) INT. (–)	EXT. (+) INT. (–)	EXT. (+) INT. (–)
30"	78"	120.0	120.0	120.0
36"		104.5	120.0	120.0
42"		89.6	120.0	120.0
48"		78.4	120.0	120.0
54"		69.7	120.0	120.0
60"		–	120.0	120.0
30"	84"	107.0	120.0	120.0
36"		89.2	120.0	120.0
42"		76.5	120.0	120.0
48"		66.9	120.0	120.0
54"		59.5	120.0	120.0
60"		–	116.9	120.0
30"	90"	87.4	120.0	120.0
36"		72.8	120.0	120.0
42"		62.4	120.0	120.0
48"		54.6	120.0	120.0
54"		–	111.0	120.0
60"		–	–	119.8
30"	96"	72.0	120.0	120.0
36"		60.0	120.0	120.0
42"		51.4	120.0	120.0
48"		45.0	107.6	120.0
54"		–	95.7	117.0
60"		–	–	105.3
30"	102"	60.0	120.0	120.0
36"		50.0	120.0	120.0
42"		42.9	106.9	120.0
48"		–	93.5	116.6
54"		–	–	103.6
30"	108"	50.6	120.0	120.0
36"		42.1	109.1	120.0
42"		36.1	93.6	118.8
48"		–	81.9	104.0
30"	114"	43.0	113.9	120.0
36"		35.8	94.9	120.0
42"		–	81.4	106.7
48"		–	–	93.3
30"	120"	36.9	97.7	120.0
36"		30.7	81.4	112.3
42"		–	69.8	96.3
48"		–	–	84.2
30"	126"	31.9	84.4	120.0
36"		–	70.3	101.9
42"		–	–	87.3
30"	132"	–	73.4	111.4
36"		–	61.1	92.8
42"		–	–	79.6
30"	138"	–	64.2	101.9
36"		–	53.5	84.9
30"	144"	–	56.5	93.6
36"		–	47.1	78.0

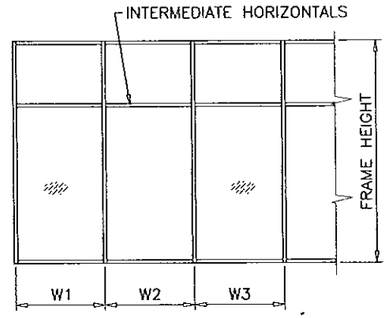

WIDTH (W) = W1
AT FRAME JAMB

WIDTH (W) = $\frac{W2 + W3}{2}$
AT FRAME MULLION

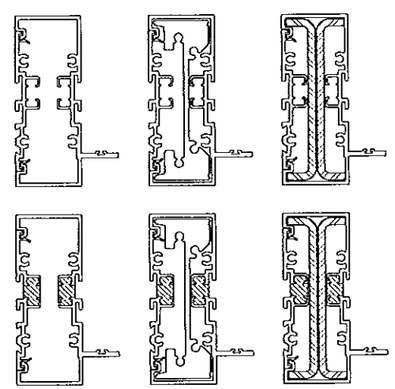

JAMB 'J1' JAMB 'J2' JAMB 'J3'

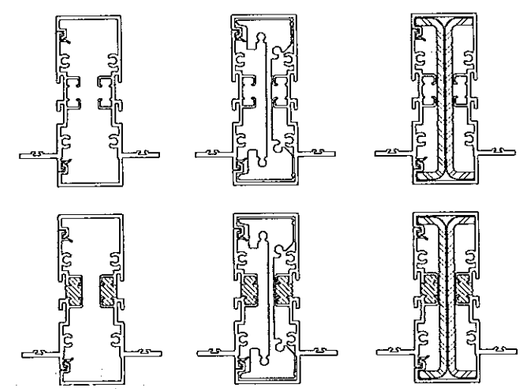

MULLION 'M1' MULLION 'M2' MULLION 'M3'

NOTE:
INTERPOLATION BETWEEN WIDTHS OR HEIGHTS ALLOWED.

MULLIONS

Engr: JAVAD AHMAD
CIVIL
FLA. PE # 70592
C.A.N. 3538
DEC 03 2013

PRODUCT REVISED
as complying with the Florida
Building Code
Acceptance No 13-1021.06
Expiration Date June 2, 2015
By Manuel Gomez
Miami Dade Product Control

AL-FAROOQ CORPORATION
ENGINEERS & PRODUCT DEVELOPMENT
1235 S.W. 87 AVE
MIAMI, FLORIDA 33174
TEL. (305) 264-8100 FAX. (305) 262-6978

COMP-ANL\W10-04SM

SERIES SMI-090 ALUM WINDOW WALL (N.I.)

Aldora Aluminum & Glass Products, Inc.
11500 MIRAMAR PARKWAY SUITE 300
MIRAMAR, FL. 33025
TEL. (305) 888-6288 FAX. (305) 888-6289

revisions:

no	date	by	description
A	04.21.10		NO CHANGE THIS SHEET
B	10.21.11		NO CHANGE THIS SHEET
C	08.12.13		MANUF. NAME REV.
D	12.09.13		MANUF. NAME REV.

date: 02-05-10
scale: –
dr. by: HAMID
chk. by:

drawing no.
W10-04

ANCHOR LOAD CAPACITY – PSF EXT.(+) & INT.(–)								
NOMINAL DIMS.		ANCHORS TYPE 'A'			ANCHORS TYPE 'B'		ANCHORS TYPE 'C'	
WIDTH (W)	FRAME HEIGHT	A2	A3	A4	B2	B3	C2	C3
30"	60"	120.0	120.0	120.0	120.0	120.0	120.0	120.0
36"		120.0	120.0	120.0	120.0	120.0	120.0	120.0
42"		107.4	120.0	120.0	120.0	120.0	120.0	120.0
48"		94.0	120.0	120.0	120.0	120.0	120.0	120.0
54"		83.6	120.0	120.0	120.0	120.0	120.0	120.0
60"		75.2	112.8	120.0	115.2	120.0	120.0	120.0
30"	66"	120.0	120.0	120.0	120.0	120.0	120.0	120.0
36"		113.9	120.0	120.0	120.0	120.0	120.0	120.0
42"		97.7	120.0	120.0	120.0	120.0	120.0	120.0
48"		85.5	120.0	120.0	120.0	120.0	120.0	120.0
54"		76.0	113.9	120.0	116.4	120.0	120.0	120.0
60"		68.4	102.5	120.0	104.7	120.0	120.0	120.0
30"	72"	120.0	120.0	120.0	120.0	120.0	120.0	120.0
36"		104.4	120.0	120.0	120.0	120.0	120.0	120.0
42"		89.5	120.0	120.0	120.0	120.0	120.0	120.0
48"		78.3	117.5	120.0	120.0	120.0	120.0	120.0
54"		69.6	104.4	120.0	106.7	120.0	120.0	120.0
60"		62.7	94.0	120.0	96.0	120.0	120.0	120.0
30"	78"	115.7	120.0	120.0	120.0	120.0	120.0	120.0
36"		96.4	120.0	120.0	120.0	120.0	120.0	120.0
42"		82.6	120.0	120.0	120.0	120.0	120.0	120.0
48"		72.3	108.5	120.0	110.8	120.0	120.0	120.0
54"		64.3	96.4	120.0	98.5	120.0	120.0	120.0
60"		57.8	86.8	115.7	88.6	120.0	117.9	120.0
30"	84"	107.4	120.0	120.0	120.0	120.0	120.0	120.0
36"		89.5	120.0	120.0	120.0	120.0	120.0	120.0
42"		76.7	115.1	120.0	117.6	120.0	120.0	120.0
48"		67.1	100.7	120.0	102.9	120.0	120.0	120.0
54"		59.7	89.5	119.4	91.4	120.0	120.0	120.0
60"		53.7	80.6	107.4	82.3	120.0	109.5	120.0
30"	90"	100.3	120.0	120.0	120.0	120.0	120.0	120.0
36"		83.6	120.0	120.0	120.0	120.0	120.0	120.0
42"		71.6	107.4	120.0	109.7	120.0	120.0	120.0
48"		62.7	94.0	120.0	96.0	120.0	120.0	120.0
54"		55.7	83.6	111.4	85.3	120.0	113.5	120.0
60"		50.1	75.2	100.3	76.8	115.2	102.2	120.0
30"	96"	94.0	120.0	120.0	120.0	120.0	120.0	120.0
36"		78.3	117.5	120.0	120.0	120.0	120.0	120.0
42"		67.1	100.7	120.0	102.9	120.0	120.0	120.0
48"		58.8	88.1	117.5	90.0	120.0	119.8	120.0
54"		52.2	78.3	104.4	80.0	120.0	106.4	120.0
60"		47.0	70.5	94.0	72.0	108.0	95.8	120.0
30"	102"	88.5	120.0	120.0	120.0	120.0	120.0	120.0
36"		73.7	110.6	120.0	112.9	120.0	120.0	120.0
42"		63.2	94.8	120.0	96.8	120.0	120.0	120.0
48"		55.3	82.9	110.6	84.7	120.0	112.7	120.0
54"		49.2	73.7	98.3	75.3	112.9	100.2	120.0
30"	108"	83.6	120.0	120.0	120.0	120.0	120.0	120.0
36"		69.6	104.4	120.0	106.7	120.0	120.0	120.0
42"		59.7	89.5	119.4	91.4	120.0	120.0	120.0
48"		52.2	78.3	104.4	80.0	120.0	106.4	120.0
30"	114"	79.2	118.7	120.0	120.0	120.0	120.0	120.0
36"		66.0	98.9	120.0	101.1	120.0	120.0	120.0
42"		56.5	84.8	113.1	86.6	120.0	115.2	120.0
48"		49.5	74.2	98.9	75.8	113.7	100.8	120.0
30"	120"	75.2	112.8	120.0	115.2	120.0	120.0	120.0
36"		62.7	94.0	120.0	96.0	120.0	120.0	120.0
42"		53.7	80.6	107.4	82.3	120.0	109.5	120.0
48"		47.0	70.5	94.0	72.0	108.0	95.8	120.0

ANCHOR LOAD CAPACITY – PSF EXT.(+) & INT.(–)								
NOMINAL DIMS.		ANCHORS TYPE 'A'			ANCHORS TYPE 'B'		ANCHORS TYPE 'C'	
WIDTH (W)	FRAME HEIGHT	A2	A3	A4	B2	B3	C2	C3
30"	126"	71.6	107.4	120.0	109.7	120.0	120.0	120.0
36"		59.7	89.5	119.4	91.4	120.0	120.0	120.0
42"		51.2	76.7	102.3	78.4	117.6	104.3	120.0
30"	132"	68.4	102.5	120.0	104.7	120.0	120.0	120.0
36"		57.0	85.5	113.9	87.3	120.0	116.1	120.0
42"		48.8	73.2	97.7	74.8	112.2	99.5	120.0
30"	138"	65.4	98.1	120.0	100.2	120.0	120.0	120.0
36"		54.5	81.7	109.0	83.5	120.0	111.1	120.0
30"	144"	62.7	94.0	120.0	96.0	120.0	120.0	120.0
36"		52.2	78.3	104.4	80.0	120.0	106.4	120.0

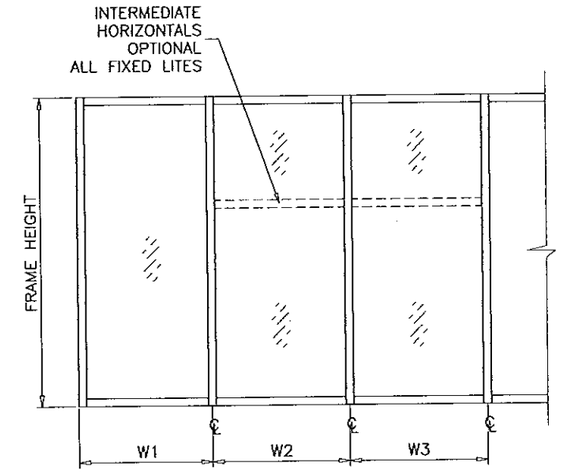

WIDTH (W) = W1
AT FRAME JAMB

WIDTH (W) = $\frac{W2 + W3}{2}$
AT FRAME MULLION

TYPICAL ANCHORS: SEE ELEV. FOR SPACING

TYPE 'A'

1/4" DIA ULTRACON BY 'ELCO' (Fu=177 KSI, Fy=155 KSI)
INTO 2BY WOOD BUCKS OR WOOD STRUCTURES
WITH 1–3/8" MIN. PENETRATION INTO WOOD

THRU 1BY WOOD BUCKS INTO CONC. OR MASONRY
WITH 1–1/4" MIN. EMBED INTO CONC. OR MASONRY

ANCHOR EDGE DISTANCES
INTO CONCRETE = 2–1/2" MIN.
INTO WOOD STRUCTURE = 1" MIN.

TYPE 'B'

1/4" DIA ULTRACON BY 'ELCO' (Fu=177 KSI, Fy=155 KSI)
DIRECTLY INTO CONCRETE OR MASONRY
WITH 1–1/4" MIN. EMBED INTO CONC. OR MASONRY

ANCHOR EDGE DISTANCES
INTO CONCRETE = 2–1/2" MIN.

TYPE 'C'

#14 SMS OR SELF DRILLING SCREWS ST/ST (GRADE 2 CRS)
INTO METAL STRUCTURES
STEEL : 12 GA. MIN. (Fy = 36 KSI MIN.)
ALUMINUM : 1/8" THK. MIN. (6063–T5 MIN.)
(STEEL IN CONTACT WITH ALUMINUM TO BE PLATED OR PAINTED)

ANCHOR EDGE DISTANCES
INTO METAL STRUCTURE = 3/4" MIN.

CONCRETE AT HEAD, SILL OR JAMBS f'c = 3000 PSI MIN.
C–90 HOLLOW/FILLED BLOCK AT JAMBS f'm = 2000 PSI MIN.

WOOD BUCKS AND METAL STRUCTURE NOT BY 'ALDORA ALUMINUM & GLASS PRODUCTS' MUST SUSTAIN LOADS IMPOSED BY GLAZING SYSTEM AND TRANSFER THEM TO THE BUILDING STRUCTURE.

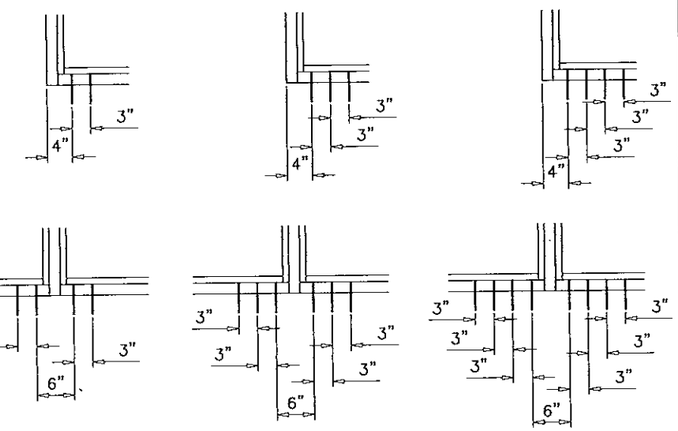

A2, B2, C2 A3, B3 A4

ANCHORS TYPES:

A2 = (2) ANCHORS TYPE 'A' AT EACH SIDE OF JAMB AND MULLION
B2 = (2) ANCHORS TYPE 'B' AT EACH SIDE OF JAMB AND MULLION
C2 = (2) ANCHORS TYPE 'C' AT EACH SIDE OF JAMB AND MULLION

A3 = (3) ANCHORS TYPE 'A' AT EACH SIDE OF JAMB AND MULLION
B3 = (3) ANCHORS TYPE 'B' AT EACH SIDE OF JAMB AND MULLION

A4 = (4) ANCHORS TYPE 'A' AT EACH SIDE OF JAMB AND MULLION

Engr: JAVAD AHMAD
CIVIL
FLA. PE # 70592
C.A.N. 3538

PRODUCT REVISED
as complying with the Florida Building Code
Acceptance No 13-1021.06
Expiration Date June 2, 2015
By Manuel Sera
Miami Dade Product Control

ANCHORS

DEC 0 9 2013

AL-FAROOQ CORPORATION
ENGINEERS & PRODUCT DEVELOPMENT
1235 S.W. 87 AVE
MIAMI, FLORIDA 33174
TEL (305) 264-8100 FAX. (305) 262-6978
COMP-ANL\W10-04SM

SERIES SMI-090 ALUM WINDOW WALL (N.I.)

Aldora Aluminum & Glass Products, Inc.
11500 MIRAMAR PARKWAY SUITE 300
MIRAMAR, FL. 33025
TEL. (305) 888-6288 FAX. (305) 888-6289

revisions:

no	date	by	description
A	04.21.10		NO CHANGE THIS SHEET
B	10.21.11		NO CHANGE THIS SHEET
C	08.12.13		MANUF. NAME REV.
D	12.09.13		MANUF. NAME REV.

date: 02-05-10
scale: 1/2" = 1"
dr. by: HAMID
chk. by:

drawing no. W10-04

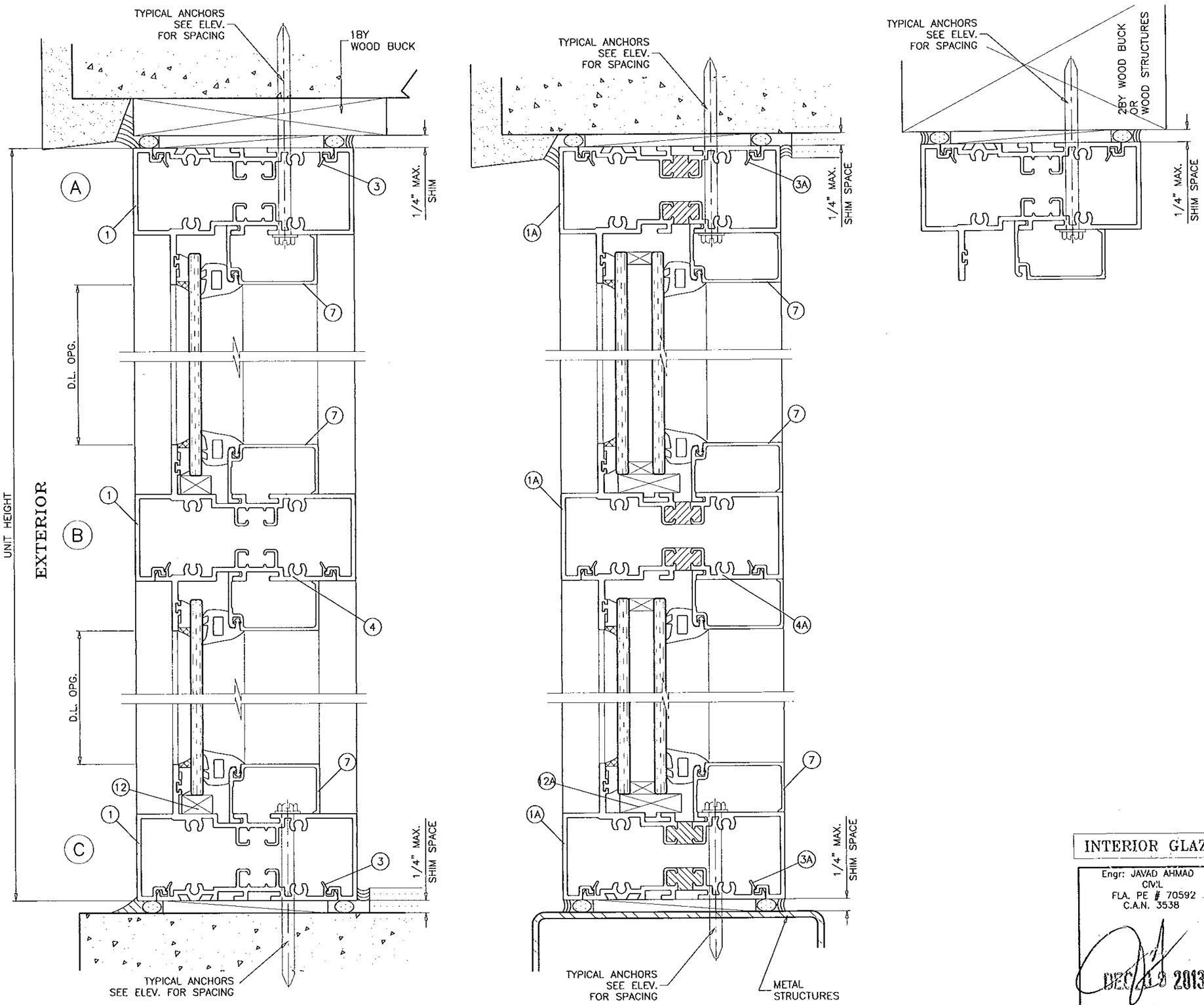

INTERIOR GLAZED

Engr: JAVAD AHMAD
CIVIL
FLA. PE # 70592
C.A.N. 3538

DEC 13 2013

PRODUCT REVISED
as complying with the Florida
Building Code
Acceptance No 13-1021.06
Expiration Date June 2, 2015
By Manuel Perez
Miami Dade Product Control

AL-FAROOQ CORPORATION
ENGINEERS & PRODUCT DEVELOPMENT
1235 S.W. 87 AVE
MIAMI, FLORIDA 33174
TEL. (305) 264-8100 FAX. (305) 262-6978
COMP-ANL\W10-04SM

SERIES SMI-090 ALUM WINDOW WALL (N.I.)

Aldora Aluminum & Glass Products, Inc.
11500 MIRAMAR PARKWAY SUITE 300
MIRAMAR, FL. 33025
TEL. (305) 888-6288 FAX. (305) 888-6289

revisions:

no	date	by	description
A	04.21.10		NO CHANGE THIS SHEET
B	10.21.11		NO CHANGE THIS SHEET
C	08.12.13		MANUF. NAME REV.
D	12.09.13		MANUF. NAME REV.

date: 02-05-10
scale: 1/2" = 1"
dr. by: HAMID
chk. by:

drawing no.
W10-04

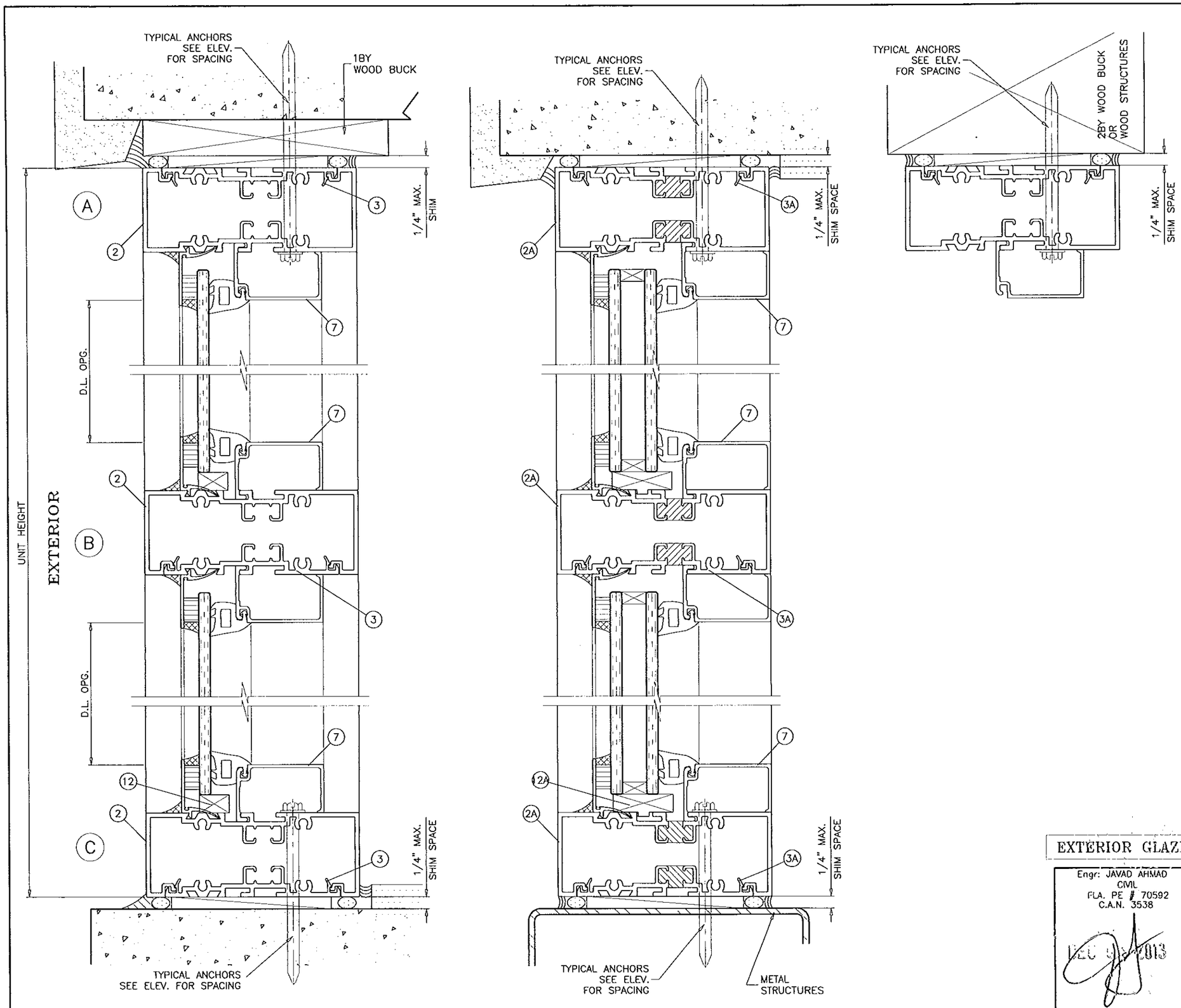

EXTERIOR GLAZED

Engr: JAVAD AHMAD
CIVIL
FLA. PE # 70592
C.A.N. 3538

DEC 9 2013

PRODUCT REVISED
as complying with the Florida
Building Code
Acceptance No 13-1024.06
Expiration Date June 2, 2015
By Manuel Perez
Miami Dade Product Control

AL-FAROOQ CORPORATION
ENGINEERS & PRODUCT DEVELOPMENT
1235 S.W. 87 AVE
MIAMI, FLORIDA 33174
TEL. (305) 264-8100 FAX. (305) 262-6978
COMP-ANL\W10-04SM

SERIES SMI-090 ALUM WINDOW WALL (N.I.)

Aldora Aluminum & Glass Products, Inc.
11500 MIRAMAR PARKWAY SUITE 300
MIRAMAR, FL. 33025
TEL. (305) 888-6288 FAX. (305) 888-6289

revisions:

no	date	by	description
A	04.21.10		NO CHANGE THIS SHEET
B	10.21.11		NO CHANGE THIS SHEET
C	08.12.13		MANUF. NAME REV.
D	12.09.13		MANUF. NAME REV.

date: 02-05-10
scale: 1/2" = 1"
dr. by: HAMID
chk. by:

drawing no.
W10-04

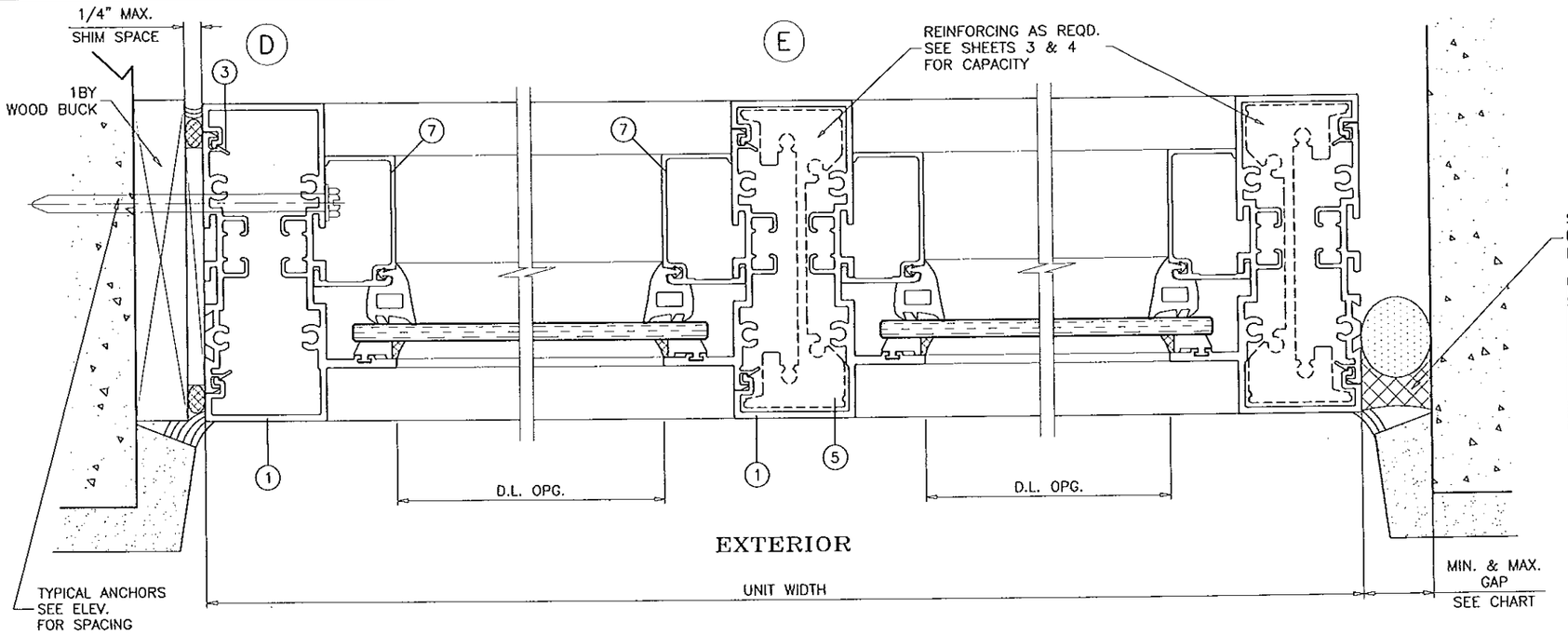

SILICONE
DOW CORNING CCS
DEPTH = 3/8" MIN.

MAX. FRAME HEIGHT	GAP	
	MIN.	MAX.
72"	3/8"	1"
96"	1/2"	1"
120"	5/8"	1"
144"	3/4"	1"

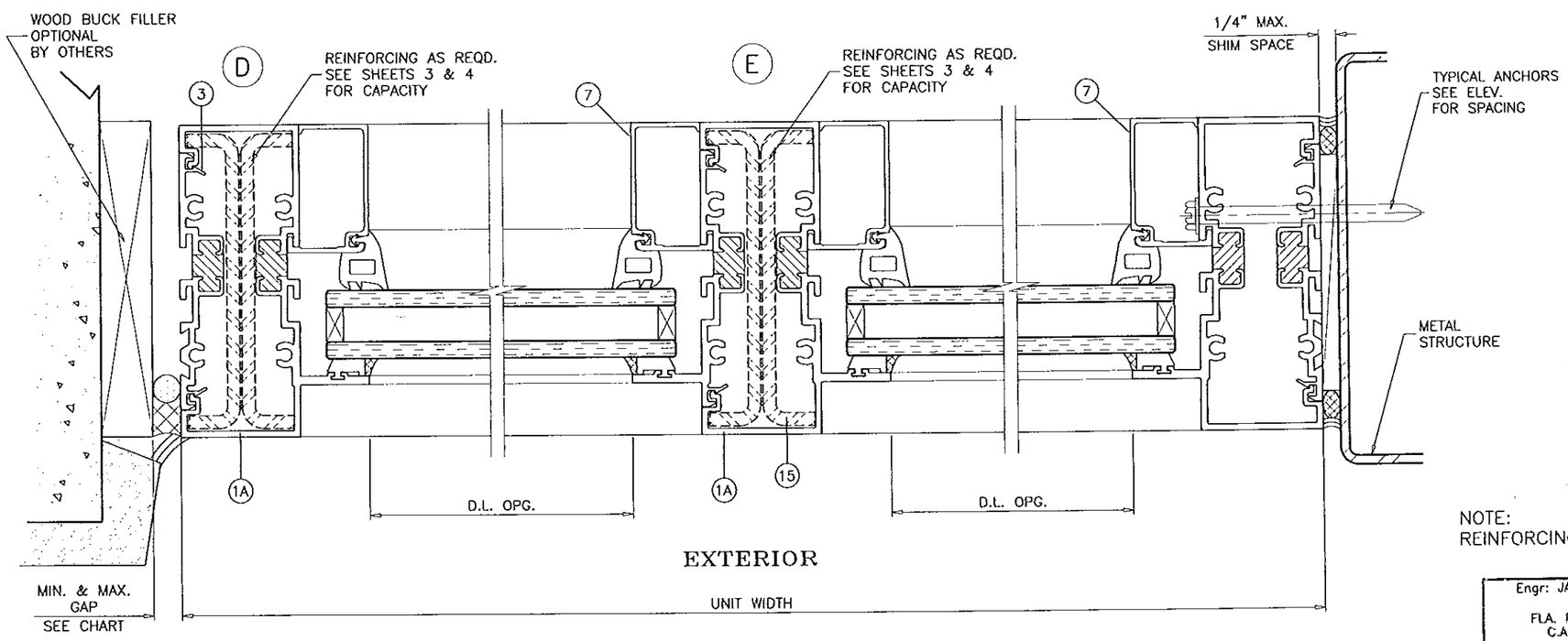

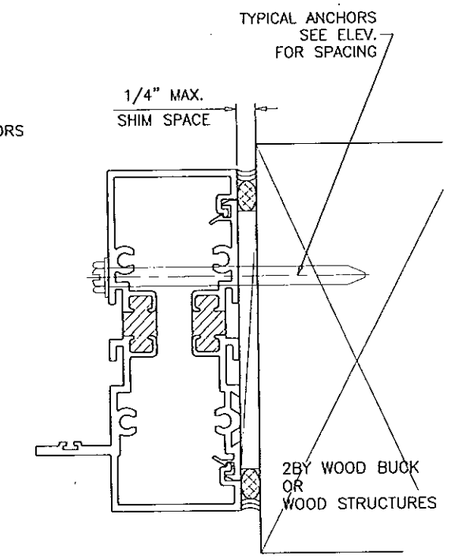

NOTE:
REINFORCINGS NOT REQUIRED AT SECURED JAMBS

INTERIOR OR EXTERIOR GLAZED

Engr: JAVAD AHMAD
CIVIL
FLA. PE # 70592
C.A.N. 3558

DEC 09 2013

PRODUCT REVISED
as complying with the Florida
Building Code
Acceptance No 13-1021.06
Expiration Date June 2, 2015
By Manuel Perez
Miami Dade Product Control

AL-FAROOQ CORPORATION
ENGINEERS & PRODUCT DEVELOPMENT
1235 S.W. 87 AVE
MIAMI, FLORIDA 33174
TEL (305) 264-8100 FAX. (305) 262-6978
COMP-ANL\W10-04SM

SERIES SMI-090 ALUM WINDOW WALL (N.I.)

Aldora Aluminum & Glass Products, Inc.
11500 MIRAMAR PARKWAY SUITE 300
MIRAMAR, FL. 33025
TEL. (305) 888-6288 FAX. (305) 888-6289

revisions:

no	date	by	description
A	04.21.10		NO CHANGE THIS SHEET
B	10.21.11		NO CHANGE THIS SHEET
C	08.12.13		MANUF. NAME REV.
D	12.09.13		MANUF. NAME REV.

date: 02-05-10
scale: 1/2" = 1"
dr. by: HAMID
chk. by:

drawing no.
W10-04

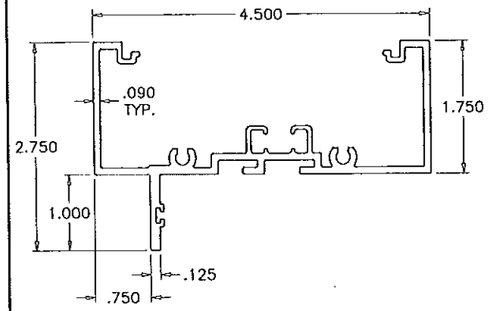

(1) FRAME HEAD/SILL/JAMB/MULLION
INTERIOR GLAZED

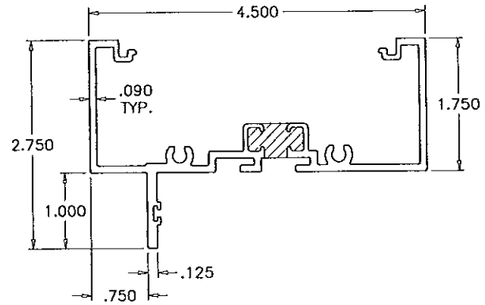

(1A) FRAME HEAD/SILL/JAMB/MULLION
INTERIOR GLAZED (THERMAL)

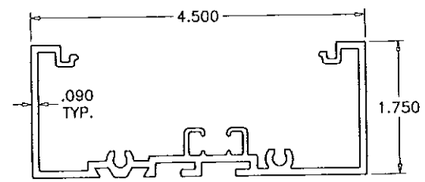

(2) FRAME HEAD/SILL/INTERM. HORIZ.
EXTERIOR GLAZED

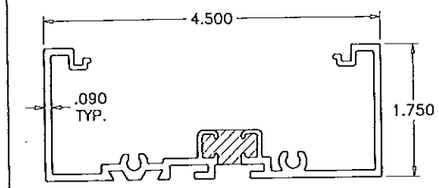

(2A) FRAME HEAD/SILL/INTERM. HORIZ.
EXTERIOR GLAZED (THERMAL)

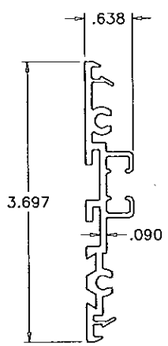

(3) PLAIN SNAP
INT./EXT. GLAZED

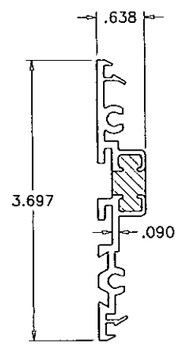

(3A) PLAIN SNAP
INT./EXT. GLAZED (THERMAL)

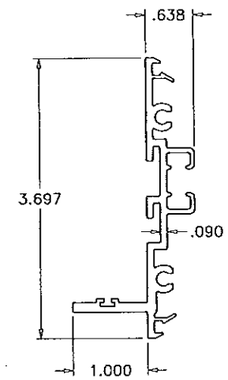

(4) FIN SNAP
INTERIOR GLAZED

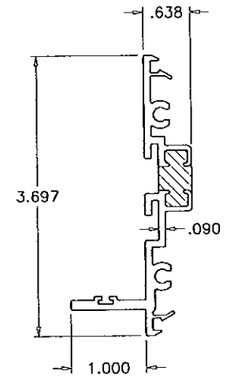

(4A) FIN SNAP
INTERIOR GLAZED (THERMAL)

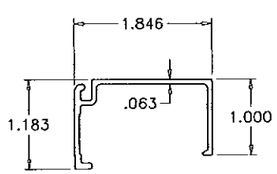

(7) INTERIOR GLASS STOP

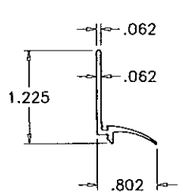

(8) EXTERIOR GLASS STOP

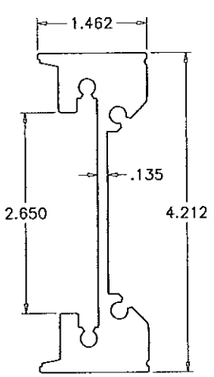

(5) REINFORCING SPLICE

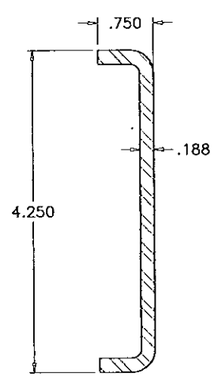

(15) REINFORCING CHANNEL

Engr: JAVAD AHMAD
CIVIL
FLA. PE # 70592
C.A.N. 3538

DEC 05 2013

PRODUCT REVISED
as complying with the Florida
Building Code
Acceptance No 13-1021.06
Expiration Date June 2, 2015
By Wamed Sera
Miami Dade Product Control

AL-FAROOQ CORPORATION
ENGINEERS & PRODUCT DEVELOPMENT
1235 S.W. 87 AVE
MIAMI, FLORIDA 33174
TEL. (305) 264-8100 FAX. (305) 262-6978

COMP-ANL\W10-04SM

SERIES SMI-090 ALUM WINDOW WALL (N.I.)

Aldora Aluminum & Glass Products, Inc.
11500 MIRAMAR PARKWAY SUITE 300
MIRAMAR, FL. 33025
TEL. (305) 888-6288 FAX. (305) 888-6289

revisions:

no	date	by	description
A	04.21.10		NO CHANGE THIS SHEET
B	10.21.11		NO CHANGE THIS SHEET
C	08.12.13		MANUF. NAME REV.
D	12.09.13		MANUF. NAME REV.

date: 02-05-10
scale: 1/2" = 1"
dr. by: HAMID
chk. by:

drawing no.
W10-04

sheet 9 of 10

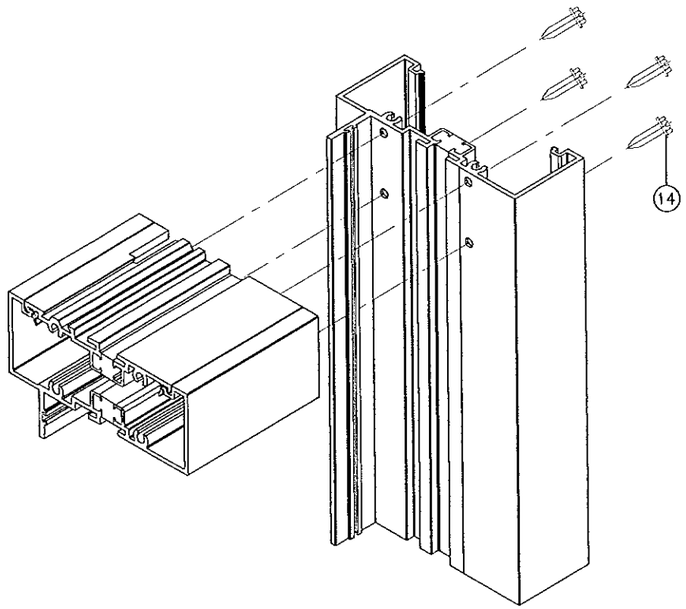

ITEM #	PART #	QUANTITY	DESCRIPTION	MATERIAL	MANF./SUPPLIER/REMARKS
1	SMI-091	AS REQD.	INT. GLAZED FRAME HEAD/SILL/JAMB/MULLION	6063-T6	SMI SYSTEMS
1A	SMI-091T	AS REQD.	INT. GLAZED FRAME HEAD/SILL/JAMB/MULLION (POUR & DEBRIDGE)	6063-T6	SMI SYSTEMS
2	SMI-098	AS REQD.	EXT. GLAZED FRAME HEAD/SILL/INTERM. HORIZ.	6063-T6	SMI SYSTEMS
2A	SMI-098T	AS REQD.	EXT. GLAZED FRAME HEAD/SILL/INTERM. HORIZ. (POUR & DEBRIDGE)	6063-T6	SMI SYSTEMS
3	SMI-094	AS REQD.	INT./EXT. GLAZED PLAIN SNAP	6063-T6	SMI SYSTEMS
3A	SMI-094T	AS REQD.	INT./EXT. GLAZED PLAIN SNAP (POUR & DEBRIDGE)	6063-T6	SMI SYSTEMS
4	SMI-093	AS REQD.	INT./EXT. GLAZED FIN SNAP	6063-T6	SMI SYSTEMS
4A	SMI-093T	AS REQD.	INT./EXT. GLAZED FIN SNAP (POUR & DEBRIDGE)	6063-T6	SMI SYSTEMS
5	SMI-095	AS REQD.	REINFORCING SPLICE	6005-T5	SMI SYSTEMS
7	SMI-092	AS REQD.	INTERIOR GLASS STOP	6063-T6	SMI SYSTEMS
8	SMI-097	AS REQD.	EXTERIOR GLASS STOP	6063-T6	SMI SYSTEMS
9	SMI-G08	AS REQD.	INTERIOR GASKET (DUROMETER 70±5)	EPDM	CENTRAL PLASTICS INC.
10	SMI-G02	AS REQD.	SINGLE FACE TAPE (3/8" X 1/2")	VINYL FOAM	FRANK LOWE
11	SMI-G07	AS REQD.	EXTERIOR GASKET (DUROMETER 70±5)	EPDM	CENTRAL PLASTICS INC.
12	SMI-SB06	2/ LITE	SETTING BLOCK MONOLITHIC GLASS (3/8" X 5/8" X 4" LG.) (DUROMETER 85±5)	EPDM	CENTRAL PLASTICS INC.
12A	SMI-SB04	2/ LITE	SETTING BLOCK INSUL. GLASS (3/8" X 1-1/4" X 4" LG.) (DUROMETER 85±5)	EPDM	CENTRAL PLASTICS INC.
13	SMI-P04	AS REQD.	THERMAL BRAKE SPACER FOR ALUM SPLICE	RIGID PVC	CENTRAL PLASTICS INC.
14	#12 X 1-1/2"	4/ CORNER	FRAME ASSEMBLY SCREWS	ST. STEEL	HEX. HEAD MACHINE SCREWS
15	–	AS REQD.	REINFORCING CHANNEL (36 KSI MIN.)	STEEL	–

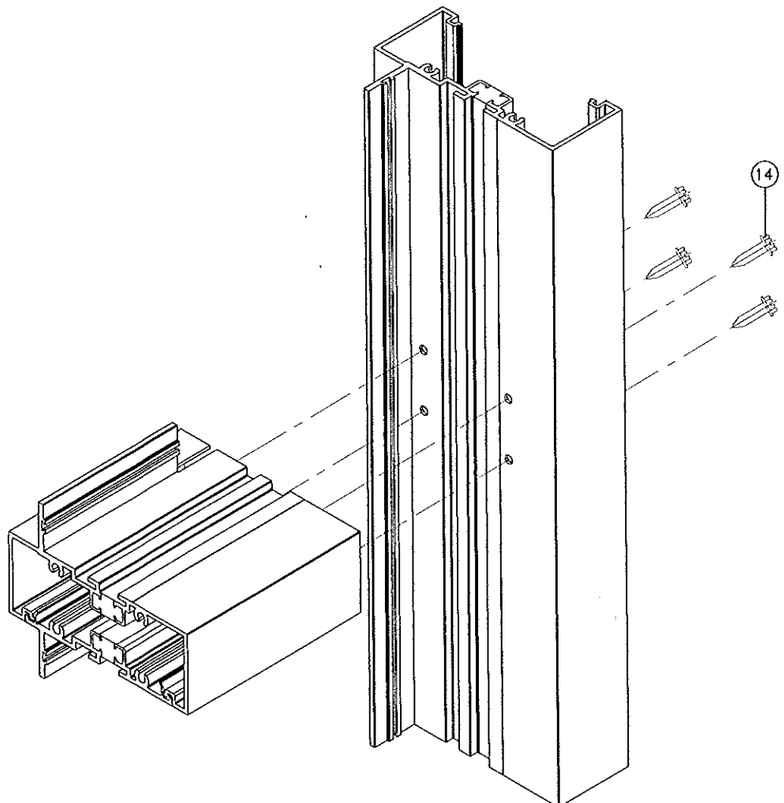

FRAME CORNERS

SEALANTS:

ALL FRAME CORNERS, JOINTS, MULLION SEAMS AND PERIMETER OF GLAZING BEAD TO FRAME TO BE SEALED WITH DOW CORNING CWS, GE 2000 OR PECORA 895 SILICONE SEALANT.

Engr: JAVAD AHMAD
CIVIL
FLA/ PE # 70592
C.A.N. 3538

DEC/09/2013

PRODUCT REVISED
as complying with the Florida
Building Code
Acceptance No 13-1021.06
Expiration Date June 2, 2015
By Wamed Sirez
Miami Dade Product Control

AL-FAROOQ CORPORATION
ENGINEERS & PRODUCT DEVELOPMENT
1235 S.W. 87 AVE
MIAMI, FLORIDA 33174
TEL. (305) 264-8100 FAX. (305) 262-6978
COMP-ANL\W10-04SM

SERIES SMI-090 ALUM WINDOW WALL (N.I.)

Aldora Aluminum & Glass Products, Inc.
11500 MIRAMAR PARKWAY SUITE 300
MIRAMAR, FL. 33025
TEL. (305) 888-6289 FAX. (305) 888-6288

revisions:

no	date	by	description
A	04.21.10		REV. PER BCCO COMMENTS
B	10.21.11		DURO ADDED
C	08.12.13		MANUF. NAME REV.
D	12.09.13		MANUF. NAME REV.

date: 02-05-10
scale: 1/2" = 1"
dr. by: HAMID
chk. by:

drawing no.
W10-04