MIAMI-DADE COUNTY
DEPARTMENT OF REGULATORY AND ECONOMIC RESOURCES (RER)
BOARD AND CODE ADMINISTRATION DIVISION

MIAMI–DADE COUNTY, FLORIDA
PRODUCT CONTROL SECTION
11805 SW 26 Street, Room 208
T (786) 315–2590 F (786) 315–2599
www.miamidade.gov/economy

NOTICE OF ACCEPTANCE (NOA)

PGT Industries, Inc.
1070 Technology Drive
North Venice, FL 34275

SCOPE:

This NOA is being issued under the applicable rules and regulations governing the use of construction materials. The documentation submitted has been reviewed and accepted by Miami–Dade County RER–Product Control Section to be used in Miami–Dade County and other areas where allowed by the Authority Having Jurisdiction (AHJ).

This NOA shall not be valid after the expiration date stated below. The Miami–Dade County Product Control Section (In Miami–Dade County) and/ or the AHJ (in areas other than Miami–Dade County) reserve the right to have this product or material tested for quality assurance purposes. If this product or material fails to perform in the accepted manner, the manufacturer will incur the expense of such testing and the AHJ may immediately revoke, modify, or suspend the use of such product or material within their jurisdiction. RER reserves the right to revoke this acceptance, if it is determined by Miami–Dade County Product Control Section that this product or material fails to meet the requirements of the applicable building code.

This product is approved as described herein, and has been designed to comply with the Florida Building Code, including the High Velocity Hurricane Zone.

DESCRIPTION: Series "AW2740" PVC Awning Window – L.M.I.

APPROVAL DOCUMENT: Drawing No. **08-00880** titled "AW2740 PVC Awning Window Impact", sheets 1 through 6 of 6, dated 10/20/09, with revision **E** dated 05/20/15, prepared by manufacturer, signed and sealed by Anthony Lynn Miller, P.E., bearing the Miami-Dade County Product Control Section Revision stamp with the Notice of Acceptance number and expiration date by the Miami-Dade County Product Control Section.

MISSILE IMPACT RATING: Large and Small Missile Impact Resistant

LABELING: Each unit shall bear a permanent label with the manufacturer's name or logo, city, state, series, and following statement: "Miami–Dade County Product Control Approved" and per American Architectural Manufacturers Association Permanent Label Requirements, unless otherwise noted herein.

RENEWAL of this NOA shall be considered after a renewal application has been filed and there has been no change in the applicable building code negatively affecting the performance of this product.

TERMINATION of this NOA will occur after the expiration date or if there has been a revision or change in the materials, use, and/ or manufacture of the product or process. Misuse of this NOA as an endorsement of any product, for sales, advertising or any other purposes shall automatically terminate this NOA. Failure to comply with any section of this NOA shall be cause for termination and removal of NOA.

ADVERTISEMENT: The NOA number preceded by the words Miami–Dade County, Florida, and followed by the expiration date may be displayed in advertising literature. If any portion of the NOA is displayed, then it shall be done in its entirety.

INSPECTION: A copy of this entire NOA shall be provided to the user by the manufacturer or its distributors and shall be available for inspection at the job site at the request of the Building Official.

This NOA **revises and renews NOA No. 11-1114.23** and consists of this page 1 and evidence pages E–1 and E–2, as well as approval document mentioned above.

The submitted documentation was reviewed by **Manuel Perez, P. E.**

MIAMI-DADE COUNTY APPROVED

6/5/15

PGT Industries, Inc.

NOTICE OF ACCEPTANCE: EVIDENCE SUBMITTED

A. DRAWINGS

1. Manufacturer's die drawings and sections.
2. Drawing No. **08-00880** titled "AW2740 PVC Awning Window Impact", sheets 1 through 6 of 6, dated 10/20/09, with revision **E** dated 05/20/15, prepared by manufacturer, signed and sealed by Anthony Lynn Miller, P.E.

B. TESTS

1. Test reports on: 1) Air Infiltration Test, per FBC, TAS 202-94
   2) Uniform Static Air Pressure Test, Loading per FBC TAS 202-94
   3) Water Resistance Test, per FBC, TAS 202-94
   4) Large Missile Impact Test per FBC, TAS 201-94
   5) Cyclic Wind Pressure Loading per FBC, TAS 203-94
   6) Forced Entry Test, per FBC 2411.3.2.1, TAS 202-94

   Along with marked-up drawings and installation diagram of a PVC awning window, prepared by Fenestration Testing Laboratory, Test Report No. **FTL-7483**, dated 08/23/13, signed and sealed by Marlin D. Brinson, P.E.
2. Test reports on: 1) Air Infiltration Test, per FBC, TAS 202-94
   2) Uniform Static Air Pressure Test, Loading per FBC TAS 202-94
   3) Water Resistance Test, per FBC, TAS 202-94
   4) Large Missile Impact Test per FBC, TAS 201-94
   5) Cyclic Wind Pressure Loading per FBC, TAS 203-94
   6) Forced Entry Test, per FBC 2411 3.2.1, TAS 202-94

   Along with marked-up drawings and installation diagram of a PVC casement window, prepared by National Certified Testing Laboratories, Inc., Test Reports No.'s **NCTL-210-3633-1** and **NCTL-210-3633-2A**, dated 12/04/07 and 05/28/08, both signed and sealed by Gerard J. Ferrara, P.E.
   (Submitted under NOA No. 09-1103.06)

C. CALCULATIONS

1. Anchor verification calculations and structural analysis, complying with **FBC 5th Edition (2014)**, dated 05/22/15, prepared by manufacturer, signed and sealed by Luis R. Lomas, P.E.
2. **Glazing complies with ASTM E1300-04/ 09**

D. QUALITY ASSURANCE

1. Miami-Dade Department of Regulatory and Economic Resources (RER).

Manuel Perez, P.E.
Product Control Examiner
NOA No. 13-1021.12
Expiration Date: August 11, 2020
Approval Date: June 11, 2014

NOTICE OF ACCEPTANCE: EVIDENCE SUBMITTED

E. MATERIAL CERTIFICATIONS

1. Notice of Acceptance No. **13-0129.27** issued to **E.I. DuPont DeNemours & Co., Inc.** for their **"DuPont Butacite® PVB Interlayer"** dated 04/11/13, expiring on 12/11/16.
2. Notice of Acceptance No. **11-0624.02** issued to **E.I. DuPont DeNemours & Co.**, Inc. for their "**DuPont SentryGlas® Interlayer**" dated 08/25/11, expiring on 01/14/17.
3. Notice of Acceptance No. **12-0420.01** issued to L.B. Plastics, Inc. for their "**Florida Bronze Color Laminated White Rigid PVC Exterior Extrusions**" dated 12/06/12, expiring on 12/30/15.
4. Notice of Acceptance No. **10-1208.02** issued to L.B. Plastics, Inc. for their "**White Rigid PVC Exterior Extrusions**" dated 12/30/10, expiring on 12/30/15.

F. STATEMENTS

1. Statement letter of conformance, complying with **FBC-2010** and with **FBC 5th Edition (2014)**, dated 05/22/15, signed and sealed by Anthony Lynn Miller, P.E.
2. Statement letter of no financial interest and independence, dated 10/15/13, signed and sealed by Anthony Lynn Miller, P.E.
3. Laboratory compliance letter for Test Report No. **FTL-7483**, issued by Fenestration Testing Laboratory, Inc., dated 08/23/13, signed and sealed by Marlin D. Brinson, P.E.
4. Proposal issued by Product Control, dated 04/30/13, signed by Jaime D. Gascon, P.E.
5. Letter of *Adoption of as his Own, the Work of another Engineer* per Section 61G15-27.001 of the F.B.P.E., dated 10/07/11 signed and sealed by Anthony Lynn Miller, P.E.
   (Submitted under previous NOA No. 11-1114.23)
6. Laboratory compliance letter for Test Reports No. **NCTL-210-3633-1** and **NCTL-210-3633-2A**, issued by National Certified Testing Laboratories, Inc., dated 04/06/10, both signed and sealed by Gerard J. Ferrara, P.E.
   (Submitted under NOA No. 09-1103.06)

G. OTHERS

1. Notice of Acceptance No. **11-1114.23**, issued to PGT Industries, Inc. for their Series "AW 2740/ 2840" White PVC Awning Window - L.M.I., approved on 02/02/12 and expiring on 08/11/15.

Manuel Perez, P.E.
Product Control Examiner
NOA No. 13-1021.12
Expiration Date: August 11, 2020
Approval Date: June 11, 2014

REVISIONS			
REV	DESCRIPTION	DATE	APPROVED
E	ADDED GLASS TYPE G, UPDATED TO FBC 5TH ED.	05/20/15	JR

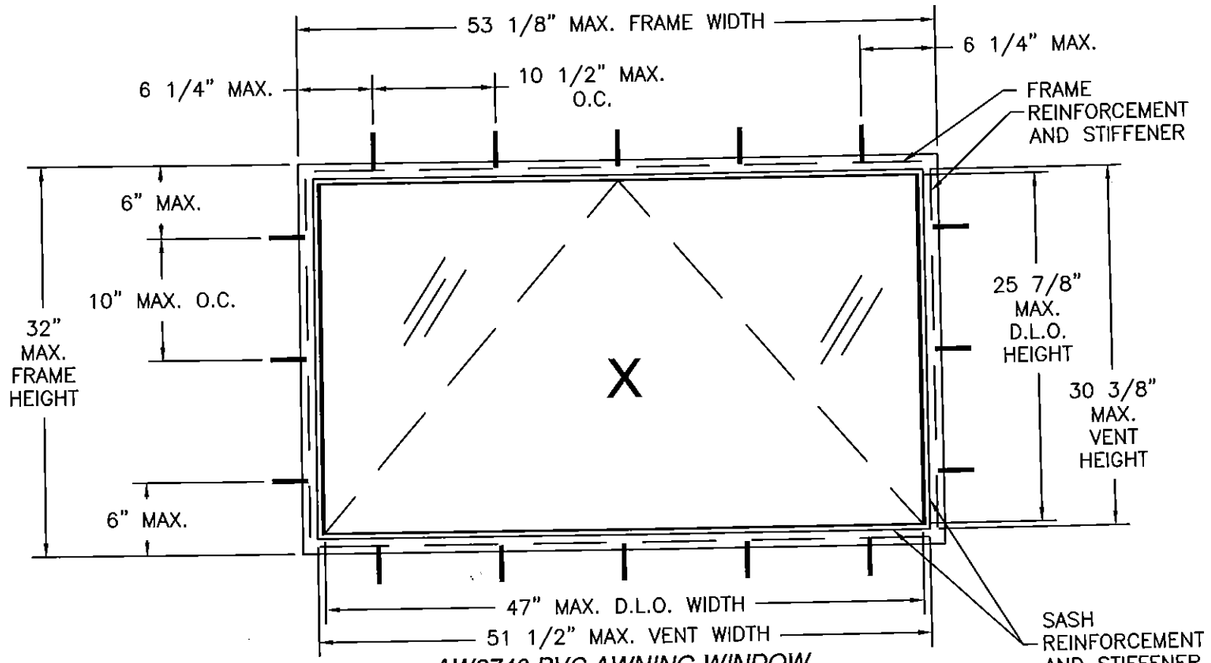

AW2740 PVC AWNING WINDOW

EXTERIOR VIEW

AW2740 WITH GLAZING TYPES B, E & F

DESIGN PRESSURE RATING	IMPACT RATING
+ 65.0 PSF - 80.0 PSF	LARGE AND SMALL MISSILE IMPACT

AW2740 FLANGE AND BOX WINDOWS WITH GLAZING TYPES A, C, D & G

DESIGN PRESSURE RATING	IMPACT RATING
+ 75.0 PSF - 100.0 PSF	LARGE AND SMALL MISSILE IMPACT

AW2740 FIN WINDOWS WITH GLAZING TYPES A, C, D & G

DESIGN PRESSURE RATING	IMPACT RATING
+ 65.0 PSF - 80.0 PSF	LARGE AND SMALL MISSILE IMPACT

NOTES:

1) THE PRODUCT SHOWN HEREIN IS DESIGNED AND MANUFACTURED TO COMPLY WITH REQUIREMENTS OF THE FLORIDA BUILDING CODE.
2) WOOD FRAMING AND MASONRY OPENING TO BE DESIGNED AND ANCHORED TO PROPERLY TRANSFER ALL LOADS TO STRUCTURE. FRAMING AND MASONRY OPENING IS THE RESPONSIBILITY OF THE ARCHITECT OR ENGINEER OF RECORD.
3) UNITS MUST BE GLAZED WITH 7/8" IGU LAMINATED OR 3/8" LAMINATED GLASS PER ASTM E1300 SEE SHEET 5 FOR APPROVED GLASS TYPES.
4) APPROVED IMPACT PROTECTIVE SYSTEM IS NOT REQUIRED FOR THIS PRODUCT IN WIND-BORNE DEBRIS REGIONS.
5) SHIM AS REQUIRED AT EACH INSTALLATION ANCHOR WITH LOAD BEARING SHIM. SHIM WHERE SPACE OF 1/16" OR GREATER OCCURS. MAXIMUM ALLOWABLE SHIM STACK TO BE 1/4".
6) ALL WOOD BUCKS LESS THAN 1-1/2" THICK ARE TO BE CONSIDERED 1X INSTALLATIONS. WOOD BUCKS DEPICTED AS 2X ARE 1-1/2" THICK OR GREATER. LOCATE ANCHORS AS SHOWN IN ELEVATIONS AND INSTALLATION DETAILS. WOOD BUCKS ARE OPTIONAL, UNIT MAY BE INSTALLED DIRECTLY TO SUBSTRATE. WOOD BUCKS (WHEN USED) SHALL BE DESIGNED TO PROPERLY TRANSFER LOADS TO THE STRUCTURE. WOOD BUCK DESIGN AND INSTALLATION IS THE RESPONSIBILITY OF THE ENGINEER, (EOR) OR ARCHITECT OF RECORD, (AOR)
7) FOR INSTALLATION INTO WOOD FRAMING OR 2X BUCKS, USE #10 WOOD SCREW WITH SUFFICIENT LENGTH TO ACHIEVE A 1-3/8" MIN. EMBEDMENT INTO SUBSTRATE WITH 13/16" MIN. EDGE DISTANCE.
8) FOR INSTALLATION THROUGH 1X WOOD BUCKS INTO CMU/MASONRY, USE 3/16" ITW TAPCON ANCHOR WITH SUFFICIENT LENGTH TO ACHIEVE A 1-1/4" MIN. EMBEDMENT INTO SUBSTRATE WITH 2-5/8"" MIN. EDGE DISTANCE.
9) FOR ANCHORING INTO METAL FRAMING USE #10 TEK SELF TAPPING SCREWS WITH SUFFICIENT LENGTH TO ACHIEVE A MINIMUM EMBEDMENT OF THREE THREADS PAST THE FRAME THICKNESS. LOCATE ANCHORS AS SHOWN IN ELEVATIONS AND INSTALLATION DETAILS.
10) ALL FASTENERS TO BE CORROSION RESISTANT.
11) INSTALLATION ANCHORS SHALL BE INSTALLED IN ACCORDANCE WITH ANCHOR MANUFACTURER'S INSTALLATION INSTRUCTIONS, AND ANCHORS SHALL NOT BE USED IN SUBSTRATES WITH STRENGTHS LESS THAN THE MINIMUM STRENGTH SPECIFIED BELOW:
    A. WOOD - MINIMUM SPECIFIC GRAVITY OF G=0.42
    B. CONCRETE - MINIMUM COMPRESSIVE STRENGTH OF 3,200 PSI.
    C. CONCRETE MASONRY UNIT, CMU - NORMAL WEIGHT AND COMPRESSIVE STRENGTH, FC OF MINIMUM 1.9 KSI. CONFORMS TO ASTM C90.
12) ALLOWABLE STRESS INCREASE OF 1/3 WAS NOT USED IN THE DESIGN OF THE PRODUCT SHOWN HEREIN. WIND LOAD DURATION FACTOR Cd=1.6 WAS USED FOR WOOD ANCHOR CALCULATIONS.
13) FRAME MATERIAL: EXTRUDED WHITE RIGID PVC .105" THICK.
    SASH MATERIAL: EXTRUDED WHITE RIGID PVC .100" THICK.
14) THE 2740 SERIES USES EITHER A PVB OR SENTRYGLAS (SG) INTERLAYER. UNITS GLAZED WITH GLASS CONTAINING AN SG INTERLAYER WERE PREVIOUSLY KNOWN AS THE 2840 SERIES.
15) REFERENCE L.B. PLASTICS, INC NOA'S FOR FLORIDA-BRONZE LAMINATED & WHITE RIGID PVC.

TABLE OF CONTENTS

SHEET NO.	DESCRIPTION
1	ELEVATION, ANCHORING AND NOTES
2	BILL OF MATERIALS AND CROSS SECTIONS
3 - 4	INSTALLATION DETAILS
5	GLAZING DETAILS
6	COMPONENTS

PRODUCT REVISED
as complying with the Florida
Building Code
Acceptance No 13-1021.12
Expiration Date 08/11/2020
By Manuel Perez
Miami Dade Product Control

PGT INDUSTRIES
1070 TECHNOLOGY DRIVE
NOKOMIS, FL 34275

AW2740 PVC AWNING WINDOW IMPACT
ELEVATION, ANCHORING AND NOTES

DRAWN: TJH	DWG NO. 08-00880	REV E
SCALE NTS	DATE 10/20/09	SHEET 1 OF 6

ANTHONY LYNN MILLER
LICENSE No. 58705
5/22/15
STATE OF FLORIDA
PROFESSIONAL ENGINEER
A. Lynn Miller P.E.
P.E.# 58705

REVISIONS			
REV	DESCRIPTION	DATE	APPROVED
E	ADDED GLASS TYPE G, UPDATED TO FBC 5TH ED.	05/20/15	JR

PARTS LIST

NO.	PART NUMBER	DESCRIPTION	MANUFACTURER	MATERIAL
1	8290	FRAME HEAD, JAMB & SILL	LB PLASTICS INC.	WHITE RIGID PVC
2	8290-1	SASH TOP, BOTTOM & VERTICAL	LB PLASTICS INC.	WHITE RIGID PVC
3	8294	7/16" GLAZING BEAD	LB PLASTICS INC.	WHITE RIGID PVC
4	8213	I.G. GLAZING BEAD	LB PLASTICS INC.	WHITE RIGID PVC
5	ST1007B	FRAME REINFORCEMENT HOT DIPPED	HYGRADE	A653 GALV. STEEL
6	ST1007B	SASH REINFORCEMENT HOT DIPPED	HYGRADE	A653 GALV. STEEL
7	OC-4952	SASH STIFFENER	EASTERN METALS	ALUMINUM 6063-T5
8	OC-4932	FRAME STIFFENER	EASTERN METALS	ALUMINUM 6063-T5
9	LBP-1375	BULB SEAL, SASH	REED RUBBER	65A TPE
10	LBP-1376	FRAME GASKET	REED RUBBER	65A TPE
11	OP06754100	X DRIVE AWNING OPERATOR ASSY	ROTO HARDWARE	STAINLESS STEEL
12	D1HW8X3/4-410	#8 FH TEK SCREW	GLF	STAINLESS STEEL
13	SIKAFLEX 552	GLAZING COMPOUND	SIKA	POLYURETHANE
14	NHC50038SS	SNUBBER	IPS	318 STAINLESS STL.
15	NHC50037SS	KEEPER	IPS	318 STAINLESS STL.
16	2NB-8K-038	RIGID FILLER DUROMETER 85	FRANK LOWE	NEOPRENE
17	8343	FIN ADAPTER	LB PLASTICS INC.	WHITE RIGID PVC
18		IMPACT GLAZING SEE SHEET 5		
50	62869/70	SUPERSPACER (5/16" & 7/16")	QUANEX	FOAM EPDM W/DES.
51	71752K	SET. BLOCK, 1/8" X 7/16" X 4"	DURO = 85 +/-5	NEOPRENE
52	71751K	SET. BLOCK, 1/8" X 1-1/16" X 4"	DURO = 85 +/-5	NEOPRENE

FLORIDA-BRONZE LAMINATED & WHITE RIGID PVC EXTRUSIONS BY L.B. PLASTICS, INC, ARE TO BE LABELED WITH AAMA EXTRUDER CODE, EXTRUDER NAME, CITY, STATE AND MDCA REQUIREMENTS

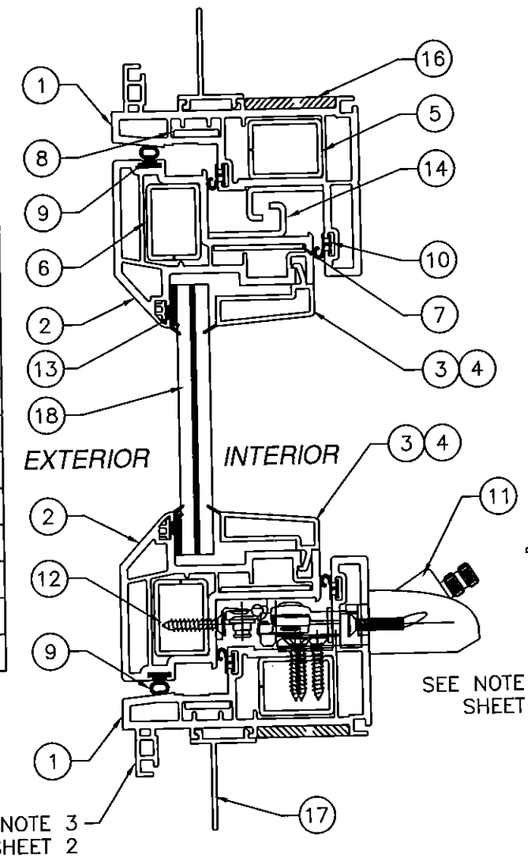

VERTICAL CROSS SECTION

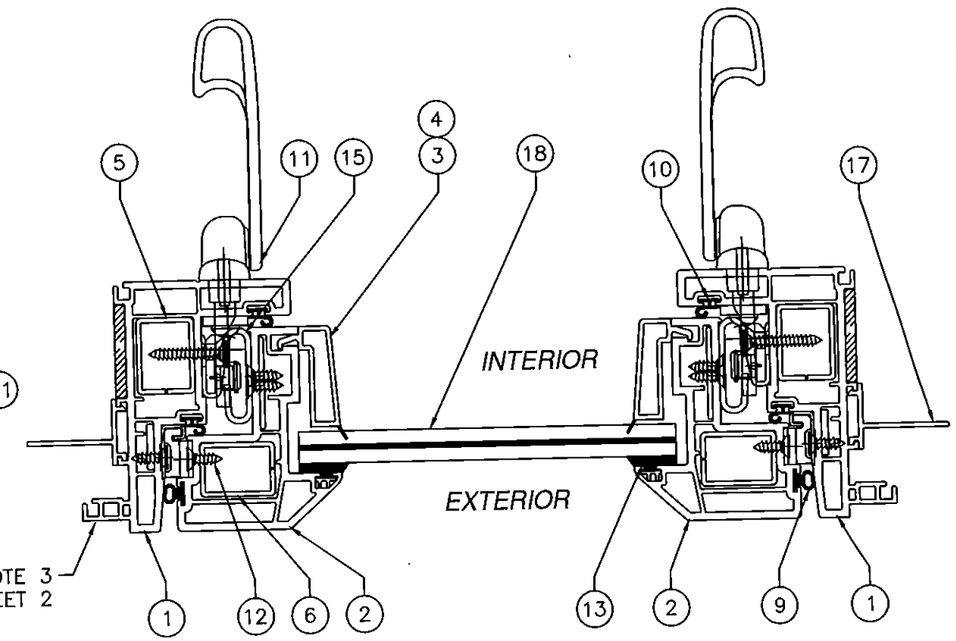

HORIZONTAL CROSS SECTION

CONSTRUCTION NOTES:

1) FRAME HEAD, JAMBS AND SILL ARE EXTRUDED RIGID PVC LINEALS AND UTILIZE A GALVANIZED A653 STEEL REINFORCING BAR. ALL CORNERS ARE MITERED AND WELDED.

2) ACTIVE SASH VERTICAL AND HORIZONTAL MEMBERS ARE EXTRUDED RIGID PVC LINEALS AND UTILIZE A GALVANIZED A653 STEEL REINFORCING BAR. ALL CORNERS ARE MITERED AND WELDED.

3) ITEM #17, FIN ADAPTER, IS A NON-STRUCTURAL ADD-ON PART. MASONRY FLANGE IS EXTRUDED INTO FRAME. WHEN UNIT IS NOT INSTALLED INTO A MASONRY SUBSTRATE FLANGE MAY BE SCORED AND REMOVED BEFORE INSTALLATION. SEE INSTALLATION DETAILS SHEETS 3-4.

PRODUCT REVISED
as complying with the Florida Building Code
Acceptance No. 13-102112
Expiration Date 08/11/2020
By Manuel Perez
Miami-Dade Product Control

PGT INDUSTRIES
1070 TECHNOLOGY DRIVE
NOKOMIS, FL 34275

AW2740 PVC AWNING WINDOW IMPACT
BILL OF MATERIALS AND CROSS SECTIONS

DRAWN: TJH	DWG NO. 008-00880	REV E
SCALE NTS	DATE 10/20/09	SHEET 2 OF 6

ANTHONY LYNN MILLER
LICENSE
No. 58705
5/22/15
STATE OF FLORIDA
PROFESSIONAL ENGINEER
A. Lynn Miller, P.E.
P.E.# 58705

REVISIONS			
REV	DESCRIPTION	DATE	APPROVED
E	ADDED GLASS TYPE G, UPDATED TO FBC 5TH ED.	05/20/15	JR

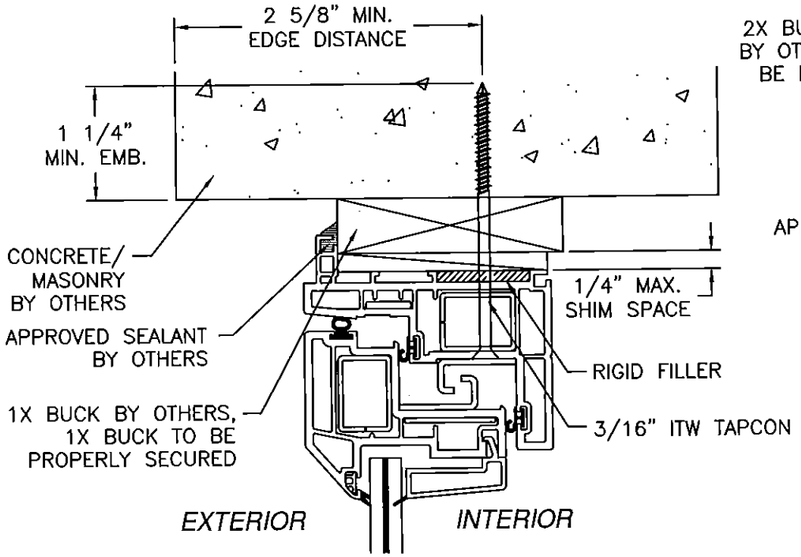

HEAD
CONCRETE/MASONRY FLANGE INSTALLATION
HEAD SHOWN, JAMBS AND SILL SIMILAR

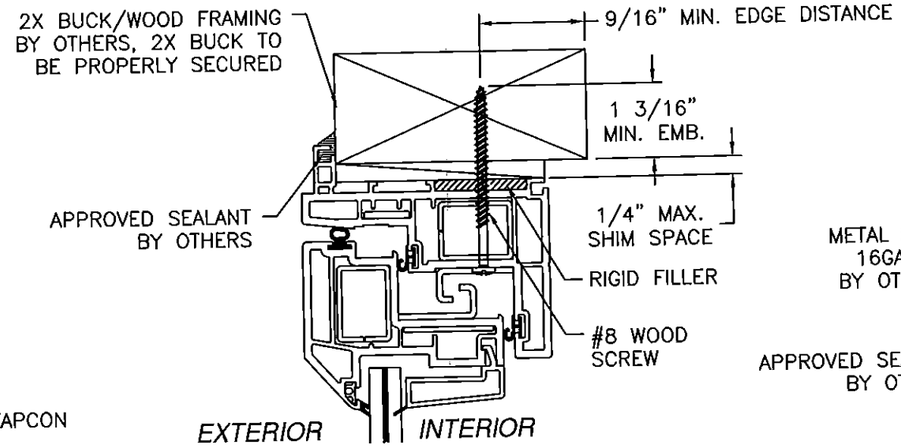

HEAD
WOOD FRAMING OR 2X BUCK FLANGE INSTALLATION
HEAD SHOWN, JAMBS AND SILL SIMILAR

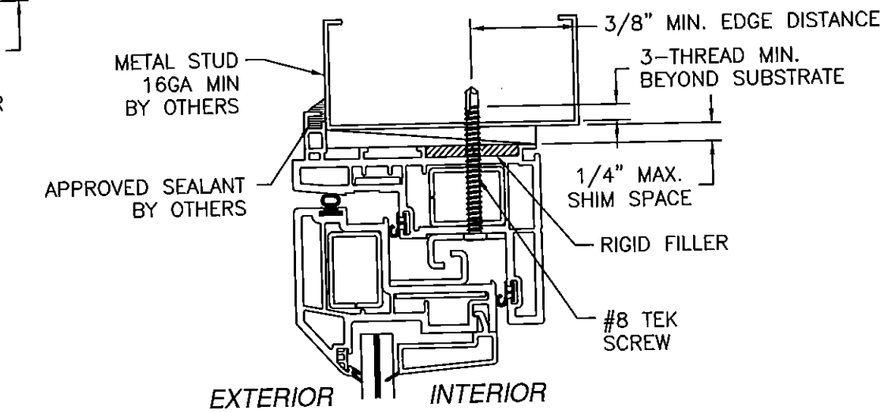

HEAD
METAL FRAMING FLANGE INSTALLATION
HEAD SHOWN, JAMBS AND SILL SIMILAR

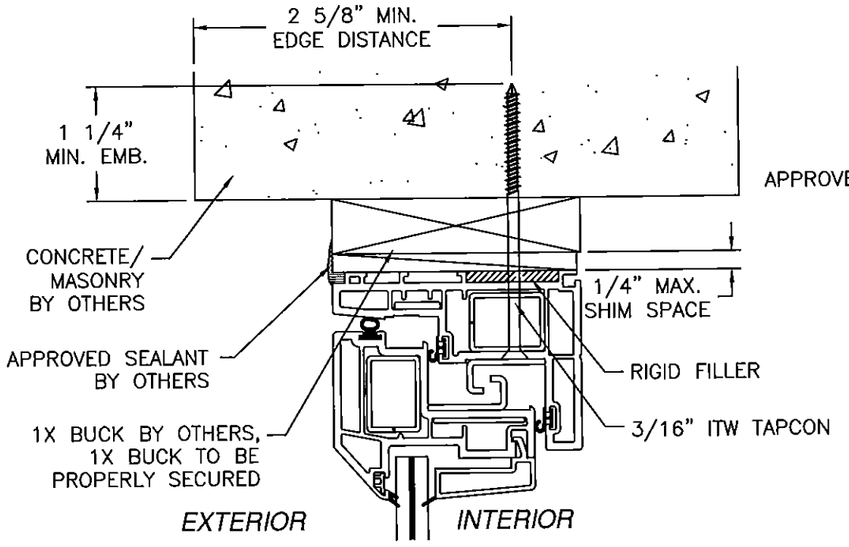

HEAD
CONCRETE/MASONRY BOX FRAME INSTALLATION
HEAD SHOWN, JAMBS AND SILL SIMILAR

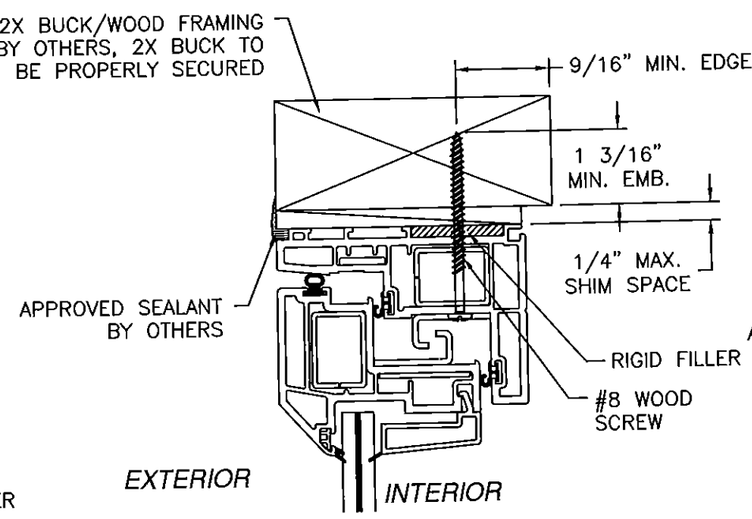

HEAD
WOOD FRAMING OR 2X BUCK BOX FRAME INSTALLATION
HEAD SHOWN, JAMBS AND SILL SIMILAR

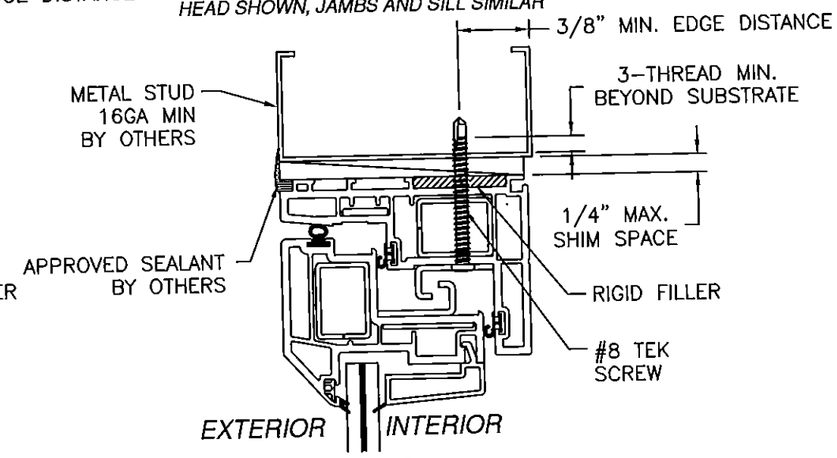

HEAD
METAL FRAMING BOX FRAME INSTALLATION
HEAD SHOWN, JAMBS AND SILL SIMILAR

PRODUCT REVISED
as complying with the Florida
Building Code
Acceptance No. 13-102112
Expiration Date 08/11/2020
By Manuel Perez
Miami-Dade Product Control

PGT INDUSTRIES
1070 TECHNOLOGY DRIVE
NOKOMIS, FL 34275

AW2740 PVC AWNING WINDOW IMPACT
INSTALLATION DETAILS

DRAWN: TJH	DWG NO. 08-00880	REV E
SCALE NTS	DATE 10/20/09	SHEET 3 OF 6

ANTHONY LYNN MILLER
LICENSE
No. 58705
STATE OF
FLORIDA
PROFESSIONAL ENGINEER
5/22/15
A. Lynn Miller, P.E.
P.E.# 58705

REVISIONS			
REV	DESCRIPTION	DATE	APPROVED
E	ADDED GLASS TYPE G, UPDATED TO FBC 5TH ED.	05/20/15	JR

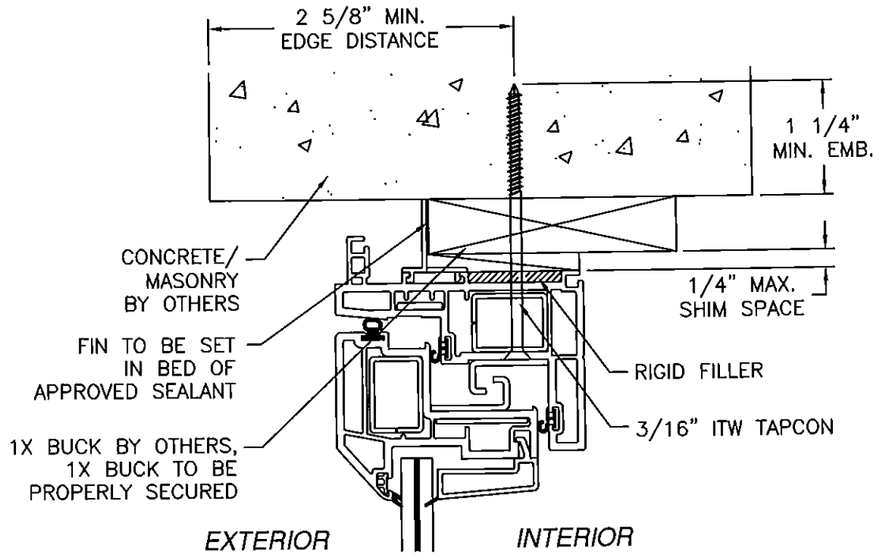

HEAD

CONCRETE/MASONRY FIN INSTALLATION
HEAD SHOWN, JAMBS AND SILL SIMILAR

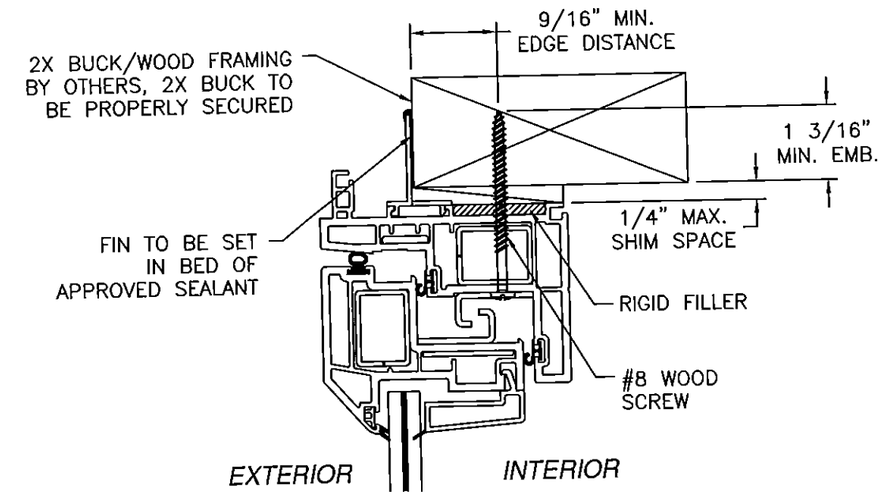

HEAD

WOOD FRAMING OR 2X BUCK FIN INSTALLATION
HEAD SHOWN, JAMBS AND SILL SIMILAR

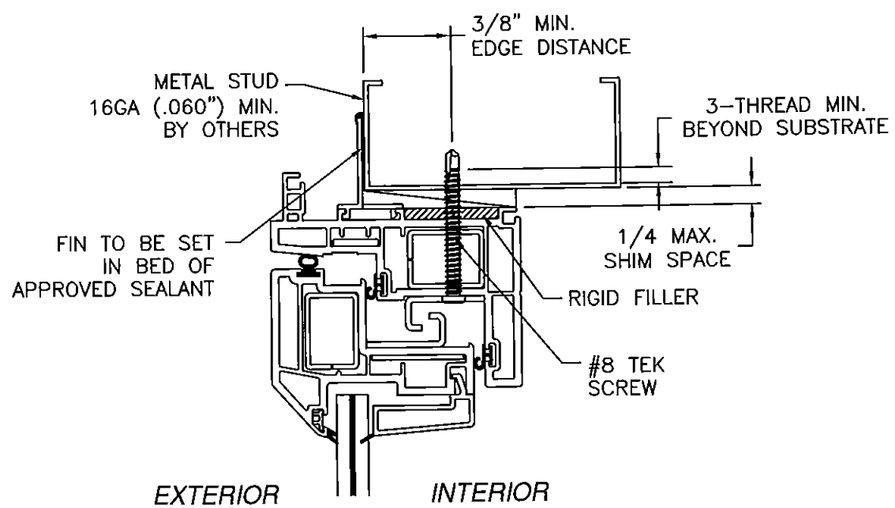

HEAD

METAL FRAMING FIN INSTALLATION
HEAD SHOWN, JAMBS AND SILL SIMILAR

PRODUCT REVISED
as complying with the Florida
Building Code
Acceptance No. 13-102112
Expiration Date 08/21/2020
By Manuel Perez
Miami Dade Product Control

PGT INDUSTRIES
1070 TECHNOLOGY DRIVE
NOKOMIS, FL 34275

AW2740 PVC AWNING WINDOW IMPACT
INSTALLATION DETAILS

DRAWN: TJH	DWG NO. 08-00880	REV E
SCALE NTS	DATE 10/20/09	SHEET 4 OF 6

ANTHONY LYNN MILLER
LICENSE
No. 58705
STATE OF
FLORIDA
PROFESSIONAL ENGINEER
5/22/15
A. Lynn Miller P.E.
P.E.# 58705

REVISIONS			
REV	DESCRIPTION	DATE	APPROVED
E	ADDED GLASS TYPE G, UPDATED TO FBC 5TH ED.	05/20/15	JR

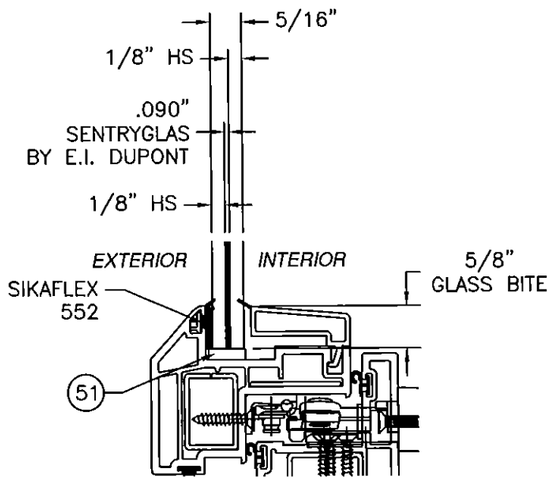

GLASS TYPE A

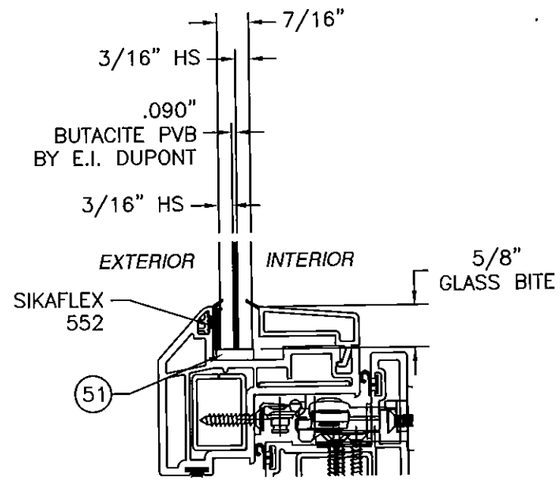

GLASS TYPE B

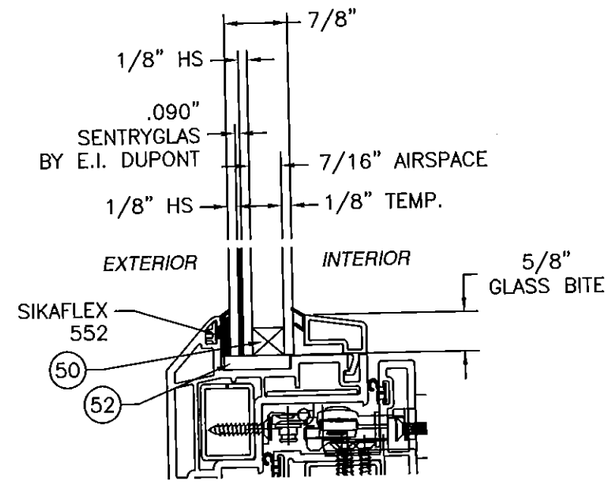

GLASS TYPE C

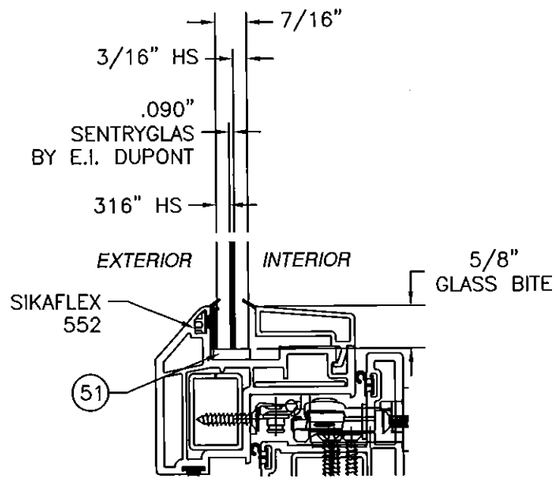

GLASS TYPE D

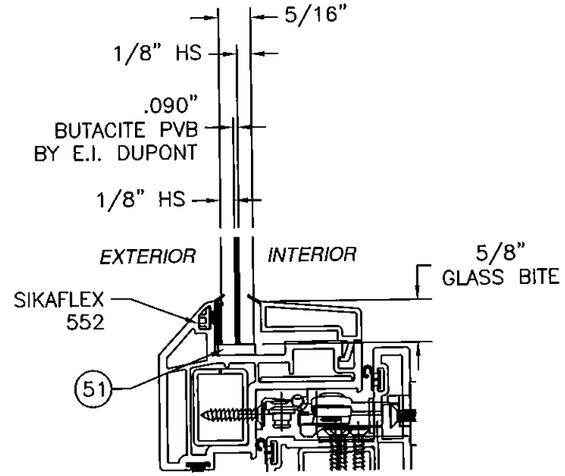

GLASS TYPE E

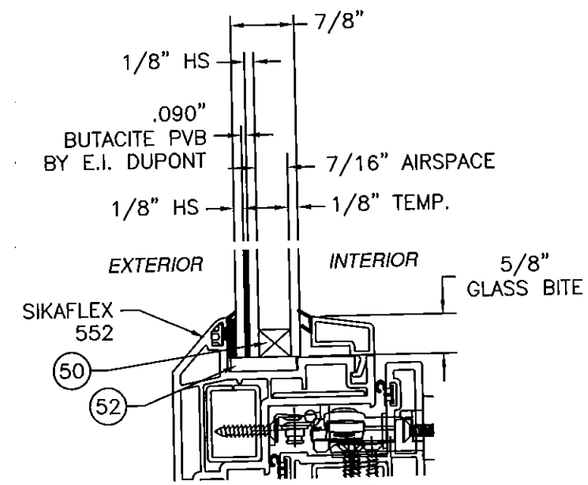

GLASS TYPE F

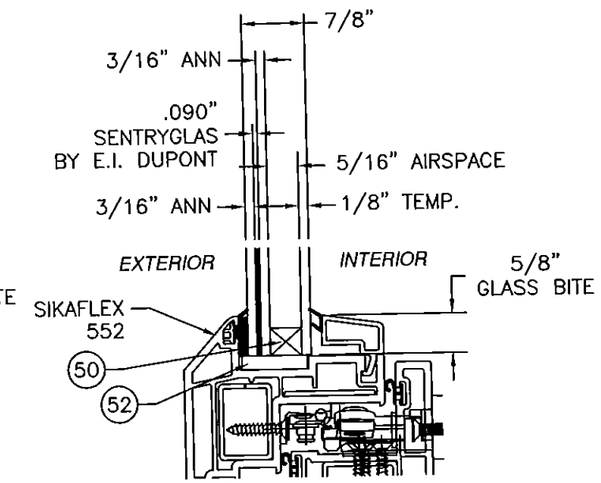

GLASS TYPE G

PRODUCT REVISED
as complying with the Florida
Building Code
Acceptance No. 13-1021.12
Expiration Date 08/11/2020
By Manuel Fuez
Miami-Dade Product Control

PGT INDUSTRIES
1070 TECHNOLOGY DRIVE
NOKOMIS, FL 34275

AW2740 PVC AWNING WINDOW IMPACT
GLAZING DETAILS

DRAWN: TJH	DWG NO. 08-00880	REV E
SCALE NTS	DATE 10/20/09	SHEET 5 OF 6

ANTHONY LYNN MILLER
LICENSE
No. 58705
STATE OF FLORIDA
PROFESSIONAL ENGINEER
5/22/15
A. Lynn Miller, P.E.
P.E.# 58705

REVISIONS			
REV	DESCRIPTION	DATE	APPROVED
E	ADDED GLASS TYPE G, UPDATED TO FBC 5TH ED.	05/20/15	JR

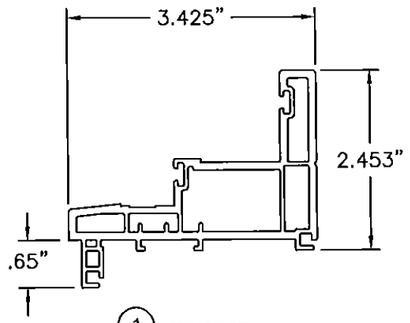

1 FRAME
WHITE RIGID PVC .105" THICK

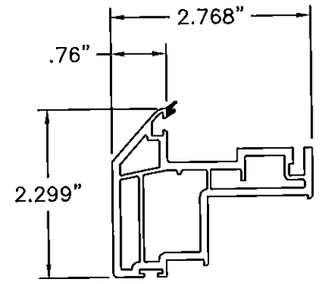

2 SASH FRAME
WHITE RIGID PVC .100" THICK

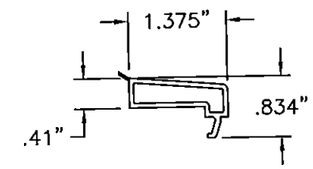

3 7/16" GLAZING BEAD
WHITE RIGID PVC .06" THICK

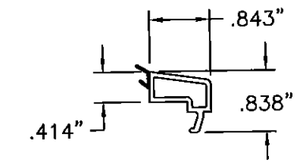

4 I.G. GLAZING BEAD
WHITE RIGID PVC .06" THICK

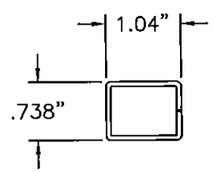

5 FRAME REINFORCEMENT
14GA (.079") GALVANIZED STEEL A653

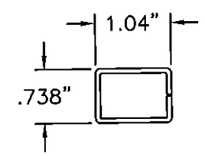

6 SASH REINFORCEMENT
16GA (.064") GALVANIZED STEEL A653

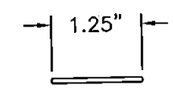

7 SASH STIFFENER
ALUMINUM 6063-T5 .065" THICK

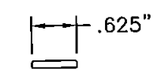

8 FRAME STIFFENER
ALUMINUM 6063-T5 .096" THICK

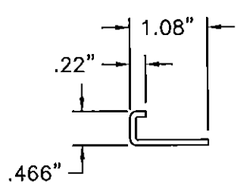

14 SNUBBER
318 STAINLESS STEEL .078" THICK

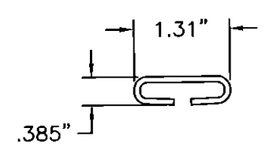

15 KEEPER
318 STAINLESS STEEL .079" THICK

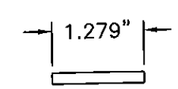

16 RIGID FILLER
DUROMETER 85
NEOPRENE .15" THICK

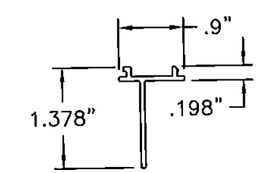

17 FIN ADAPTER
WHITE RIGID PVC .062" THICK

PRODUCT REVISED
is complying with the Florida
Building Code
Acceptance No. 13-1021.12
Expiration Date 08/31/2020
By Manuel Perez
Miami-Dade Product Control

PGT INDUSTRIES
1070 TECHNOLOGY DRIVE
NOKOMIS, FL 34275

AW2740 PVC AWNING WINDOW IMPACT COMPONENTS

DRAWN: TJH	DWG NO. 08-00880	REV E
SCALE NTS	DATE 10/20/09	SHEET 6 OF 6

ANTHONY LYNN MILLER
LICENSE
No. 58705
5/22/15
STATE OF FLORIDA
PROFESSIONAL ENGINEER
A. Lynn Miller, P.E.
P.E.# 58705