MIAMI-DADE COUNTY
DEPARTMENT OF REGULATORY AND ECONOMIC RESOURCES (RER)
BOARD AND CODE ADMINISTRATION DIVISION

MIAMI-DADE COUNTY
PRODUCT CONTROL SECTION
11805 SW 26 Street, Room 208
T (786) 315-2590 F (786) 315-2599
www.miamidade.gov/economy

NOTICE OF ACCEPTANCE (NOA)

Innovative Window Concepts, LLC
1801 Corporate Drive
Boynton Beach, FL 33426

SCOPE:

This NOA is being issued under the applicable rules and regulations governing the use of construction materials. The documentation submitted has been reviewed and accepted by Miami-Dade County RER - Product Control Section to be used in Miami Dade County and other areas where allowed by the Authority Having Jurisdiction (AHJ).

This NOA shall not be valid after the expiration date stated below. The Miami-Dade County Product Control Section (In Miami Dade County) and/or the AHJ (in areas other than Miami Dade County) reserve the right to have this product or material tested for quality assurance purposes. If this product or material fails to perform in the accepted manner, the manufacturer will incur the expense of such testing and the AHJ may immediately revoke, modify, or suspend the use of such product or material within their jurisdiction. RER reserves the right to revoke this acceptance, if it is determined by Miami-Dade County Product Control Section that this product or material fails to meet the requirements of the applicable building code.

This product is approved as described herein, and has been designed to comply with the Florida Building Code, including the High Velocity Hurricane Zone.

DESCRIPTION: Aluminum Single Hung Window-L.M.I.

APPROVAL DOCUMENT: Drawing No. **W03-53**, titled "Aluminum Single Hung Window (L.M.I.)", sheets 1 through 6 of 6, dated 07/14/03, with revision F dated 10/01/13, prepared by Al-Farooq Corporation, signed and sealed by Javad Ahmad, P.E., bearing the Miami-Dade County Product Control Revision stamp with the Notice of Acceptance number and expiration date by the Miami-Dade County Product Control Section.

MISSILE IMPACT RATING: Large and Small Missile Impact Resistant

LABELING: Each unit shall bear a permanent label with the manufacturer's name or logo, city, state, model/series, and following statement: "Miami-Dade County Product Control Approved", unless otherwise noted herein.

RENEWAL of this NOA shall be considered after a renewal application has been filed and there has been no change in the applicable building code negatively affecting the performance of this product.

TERMINATION of this NOA will occur after the expiration date or if there has been a revision or change in the materials, use, and/or manufacture of the product or process. Misuse of this NOA as an endorsement of any product, for sales, advertising or any other purposes shall automatically terminate this NOA. Failure to comply with any section of this NOA shall be cause for termination and removal of NOA.

ADVERTISEMENT: The NOA number preceded by the words Miami-Dade County, Florida, and followed by the expiration date may be displayed in advertising literature. If any portion of the NOA is displayed, then it shall be done in its entirety.

INSPECTION: A copy of this entire NOA shall be provided to the user by the manufacturer or its distributors and shall be available for inspection at the job site at the request of the Building Official.

This NOA **revises and renews NOA# 12-0301.06** and consists of this page 1 and evidence pages E-1 and E-2, as well as approval document mentioned above.

The submitted documentation was reviewed by **Manuel Perez, P.E.**

MIAMI-DADE COUNTY APPROVED

12/16/13

Innovative Window Concepts, LLC

NOTICE OF ACCEPTANCE: EVIDENCE SUBMITTED

A. DRAWINGS

1. Manufacturer's die drawings and sections.
2. Drawing No. **W03-53**, titled "Aluminum Single Hung Window (L.M.I.)", sheets 1 through 6 of 6, dated 07/14/03, with revision E dated 02/09/12, prepared by Al-Farooq Corporation, signed and sealed by Javad Ahmad, P.E.

B. TESTS

1. Test reports on: 1) Air Infiltration Test, per FBC, TAS 202-94
   2) Uniform Static Air Pressure Test, Loading per FBC, TAS 202-94
   3) Water Resistance Test, per FBC, TAS 202-94
   4) Large Missile Impact Test, per FBC, TAS 201-94
   5) Cyclic Wind Pressure Loading, per FBC, TAS 203-94
   6) Force Entry Test, per FBC 2411 3.2.1 and TAS 202-94

   along with marked-up drawings and installation diagram of an aluminum single hung window, prepared by American Test Lab of South Florida, Test Report No. **ATL-0527.01-03**, dated 06/12/03, signed and sealed by Henry Hattem, P.E.
   (Submitted under NOA# 03-1201.02)
2. Test reports on: 1) Uniform Static Air Pressure Test, Loading per FBC, TAS 202-94
   2) Large Missile Impact Test, per FBC, TAS 201-94
   3) Cyclic Wind Pressure Loading, per FBC, TAS 203-94

   along with marked-up drawings and installation diagram of an aluminum single hung window, prepared by American Test Lab of South Florida, Test Report No. **ATL-1109.01-04**, dated 01/25/05, signed and sealed by William R. Mehner, P.E.
   (Submitted under NOA# 05-0215.04)

C. CALCULATIONS

1. Anchor verification calculations and structural analysis prepared by Al-Farooq Corporation, complying with FBC-2007, dated 10/28/08, updated to **FBC-2010** on 01/12/12, signed and sealed by Javad Ahmad, P.E.
   (Partially submitted under NOA#08-1210.03)
2. Glazing complies with **ASTM E1300-04**

D. QUALITY ASSURANCE

1. Miami-Dade Department of Regulatory and Economic Resources (RER)

Manuel Perez, P.E.
Product Control Examiner
NOA No. 13-1024.05
Expiration Date: February 19, 2019
Approval Date: December 26, 2013

NOTICE OF ACCEPTANCE: EVIDENCE SUBMITTED

E. MATERIAL CERTIFICATIONS

1. Notice of Acceptance No. **11–0624.02** issued to **E.I. DuPont DeNemours & Co.**, Inc. for their "**DuPont SentryGlas® Interlayer**" dated 08/25/11, expiring on 01/14/17.
2. Notice of Acceptance No. **13–0129.27** issued to **E.I. DuPont DeNemours & Co., Inc.** for their "**DuPont Butacite® PVB Interlayer**" dated 04/11/13, expiring on 12/11/16.
3. Notice of Acceptance No. **12–1231.10** issued to **Eastman Chemical Company (MA)** for their "**Saflex Clear and Color Glass Interlayers**" dated 03/28/13, expiring on 05/21/16.

F. STATEMENTS

1. Statement letter of conformance, complying with **FBC-2010**, and of no financial interest, dated October 02, 2013, signed and sealed by Javad Ahmad, P.E.
2. Laboratory compliance letter for Test Report No. **ATLSF-1109.01-04**, issued by American Test Lab of South Florida, dated 01/25/05, signed and sealed by William R. Mehner, P.E. and Henry Hattem, P.E.
   (Submitted under NOA#05-0215.04)

G. OTHER

1. Notice of Acceptance No. **12-0301.06** issued to Innovative Window Concepts, LLC for their Aluminum Single Hung Window - L.M.I. approved on 05/10/12 and expiring on 02/19/14.

Manuel Perez, P.E.
Product Control Examiner
NOA No. 13-1024.05
Expiration Date: February 19, 2019
Approval Date: December 26, 2013

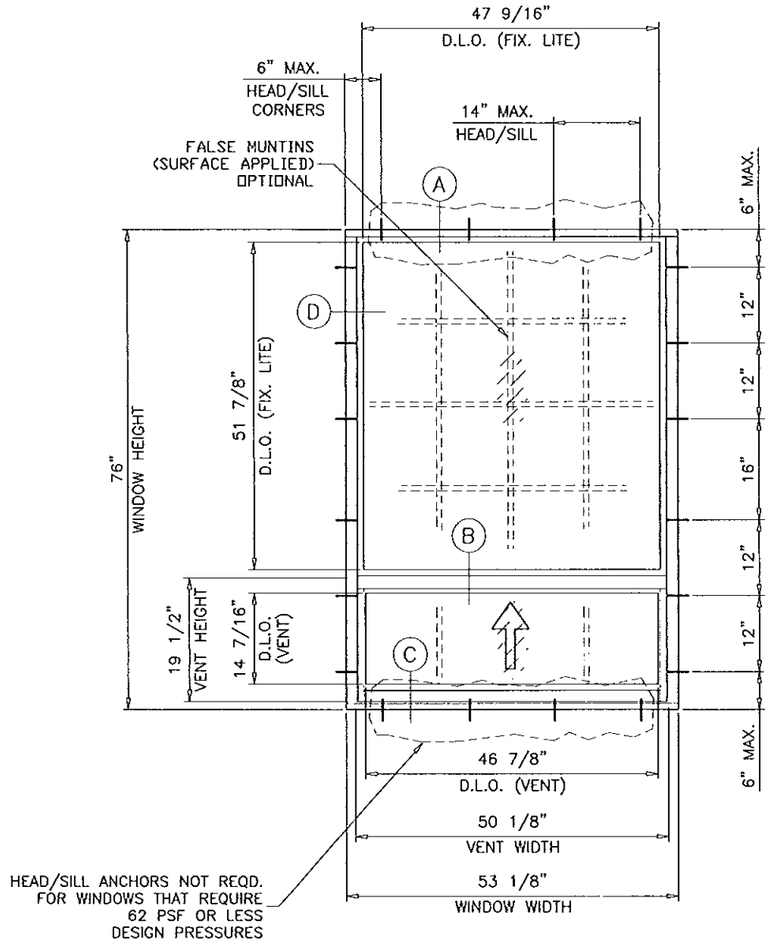

UNEQUAL LITES (ORIEL TYPE)

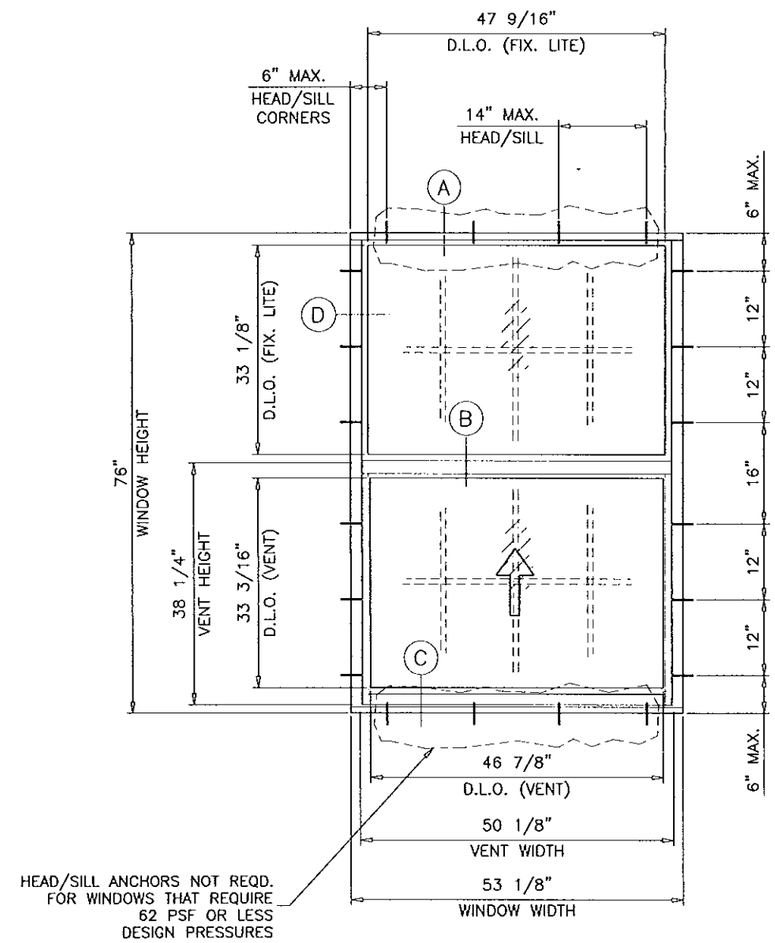

EQUAL LITES

TYPICAL ELEVATIONS

TESTED UNITS

ALUMINUM SINGLE HUNG WINDOW (L.M.I.)

DESIGN LOAD RATINGS FOR THESE WINDOWS TO BE AS PER CHARTS SHOWN ON SHEETS 2 & 3.

APPROVAL APPLIES TO SINGLE UNITS OR SIDE BY SIDE COMBINATIONS OF S.H./S.H. OR SINGLE HUNG WITH OTHER WINDOW TYPES IN MODULES OF TWO OR MORE WINDOWS USING MIAMI-DADE COUNTY APPROVED MULLIONS IN BETWEEN. LOWER DESIGN PRESSURE FROM WINDOWS OR MULLION APPROVAL WILL APPLY TO ENTIRE SYSTEM.

THIS PRODUCT HAS BEEN DESIGNED AND TESTED TO COMPLY WITH THE REQUIREMENTS OF THE FLORIDA BUILDING CODE INCLUDING HIGH VELOCITY HURRICANE ZONE (HVHZ).

WOOD BUCKS BY OTHERS, MUST BE ANCHORED PROPERLY TO TRANSFER LOADS TO THE STRUCTURE.

ANCHORS SHALL BE AS LISTED, SPACED AS SHOWN ON DETAILS, ANCHORS EMBEDMENT TO BASE MATERIAL SHALL BE BEYOND WALL DRESSING OR STUCCO.

ANCHORING OR LOADING CONDITIONS NOT SHOWN IN THESE DETAILS ARE NOT PART OF THIS APPROVAL.

A LOAD DURATION INCREASE IS USED IN DESIGN OF ANCHORS INTO WOOD ONLY.

MATERIALS INCLUDING BUT NOT LIMITED TO STEEL/METAL SCREWS, THAT COME INTO CONTACT WITH OTHER DISSIMILAR MATERIALS SHALL MEET THE REQUIREMENTS OF THE FLORIDA BLDG. CODE SECTION 2003.8.4.

THESE WINDOWS ARE RATED FOR LARGE MISSILE IMPACT. SHUTTERS ARE NOT REQUIRED.

Engr: JAVAD AHMAD
CIVIL
FLA. PE # 70592
C.A.N. 3538

OCT 0 2 2013

PRODUCT REVISED
as complying with the Florida Building Code
Acceptance No 13-1024.05
Expiration Date Feb. 19, 2019
By Manuel Perez
Miami Dade Product Control

AL-FAROOQ CORPORATION
ENGINEERS & PRODUCT DEVELOPMENT
1235 S.W. 87 AVE
MIAMI, FLORIDA 33174
TEL. (305) 264-8100 FAX. (305) 262-6978
COMP-ANL\W03-53IWC

ALUMINUM SINGLE HUNG WINDOW (L.M.I.)

INNOVATIVE WINDOW CONCEPTS, LLC
1801 CORPORATE DRIVE
BOYNTON BEACH, FL. 33426
TEL. (561) 493-2303 FAX. (561) 493-2302

revisions:

no	date	by	description
B	09.06.05		UPDATED FOR 2004 FBC
C	02.01.06		REV. PER BCCO COMMENTS
D	11.06.08		UPDATED FOR 2007 FBC
E	02.09.12		UPDATED TO 2010 FBC
F	10.01.13		NO CHANGE THIS SHEET

date: 07-14-03
scale: 1/2"=1'-0"
dr. by: HAMID
chk. by:

drawing no.
W03-53

UNEQUAL LITES WINDOWS

DESIGN LOAD CAPACITY – PSF

FLANGE DIMS.		SERIES 1030		SERIES 1040		SERIES 1041		SERIES 1062	
WIDTH	HEIGHT	EXT.(+)	INT.(–)	EXT.(+)	INT.(–)	EXT.(+)	INT.(–)	EXT.(+)	INT.(–)
19–1/8"	50–5/8" (4)	65.0	72.5	62.0	62.0	62.0	75.0	90.0	130.0
24"		65.0	72.5	62.0	62.0	62.0	75.0	90.0	130.0
26–1/2"		65.0	72.5	62.0	62.0	62.0	75.0	90.0	130.0
32"		65.0	72.5	62.0	62.0	62.0	75.0	90.0	130.0
37"		65.0	72.5	62.0	62.0	62.0	75.0	90.0	130.0
40"		65.0	72.5	62.0	62.0	62.0	75.0	90.0	130.0
48"		65.0	72.5	62.0	62.0	62.0	75.0	90.0	130.0
53–1/8"		65.0	65.2	62.0	62.0	62.0	75.0	90.0	130.0
19–1/8"	63" (5)	65.0	72.5	62.0	62.0	62.0	75.0	90.0	130.0
24"		65.0	72.5	62.0	62.0	62.0	75.0	90.0	130.0
26–1/2"		65.0	72.5	62.0	62.0	62.0	75.0	90.0	130.0
32"		65.0	72.5	62.0	62.0	62.0	75.0	90.0	130.0
37"		65.0	72.5	62.0	62.0	62.0	75.0	90.0	130.0
40"		–	–	62.0	62.0	62.0	75.0	90.0	130.0
48"		–	–	62.0	62.0	62.0	75.0	90.0	130.0
53–1/8"		–	–	62.0	62.0	62.0	75.0	90.0	129.6
19–1/8"	76" (6)	65.0	72.5	62.0	62.0	62.0	75.0	90.0	130.0
24"		65.0	72.5	62.0	62.0	62.0	75.0	90.0	130.0
26–1/2"		65.0	72.5	62.0	62.0	62.0	75.0	90.0	130.0
32"		–	–	62.0	62.0	62.0	75.0	90.0	130.0
37"		–	–	62.0	62.0	62.0	75.0	90.0	130.0
40"		–	–	62.0	62.0	62.0	75.0	90.0	130.0
48"		–	–	62.0	62.0	62.0	75.0	90.0	130.0
53–1/8"		–	–	62.0	62.0	62.0	75.0	90.0	128.1
19–1/8"	84" (7)	65.0	72.5	62.0	62.0	62.0	75.0	90.0	130.0
24"		65.0	72.5	62.0	62.0	62.0	75.0	90.0	130.0
26–1/2"		–	–	62.0	62.0	62.0	75.0	90.0	130.0
32"		–	–	62.0	62.0	62.0	75.0	90.0	130.0
37"		–	–	62.0	62.0	62.0	75.0	90.0	130.0
40"		–	–	62.0	62.0	62.0	75.0	90.0	130.0
19–1/8"	96" (8)	65.0	72.5	62.0	62.0	62.0	75.0	90.0	130.0
24"		–	–	62.0	62.0	62.0	75.0	90.0	130.0
26–1/2"		–	–	62.0	62.0	62.0	75.0	90.0	130.0
32"		–	–	62.0	62.0	62.0	75.0	90.0	130.0
37"		–	–	62.0	62.0	62.0	75.0	90.0	130.0

* NO. IN PARENTHESIS INDICATE NO. OF ANCHORS PER JAMB.

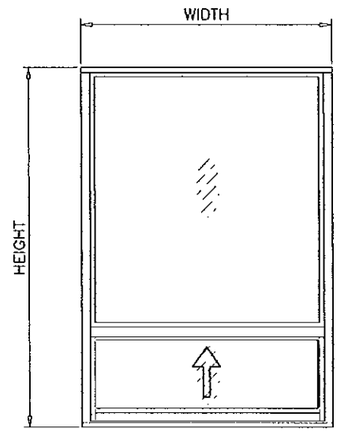

UNEQUAL LITES (ORIEL TYPE)

NOTE:
GLASS CAPACITIES ON THIS SHEET ARE BASED ON ASTM E1300–09 (3 SEC. GUSTS) AND FLORIDA BUILDING COMMISSION DECLARATORY STATEMENT DCA05–DEC–219

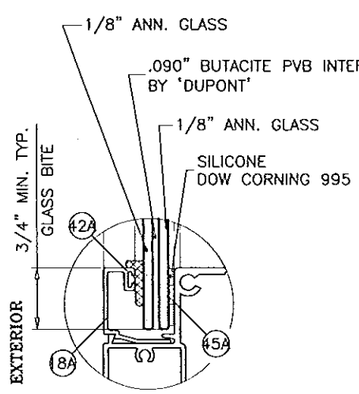

SERIES 1030

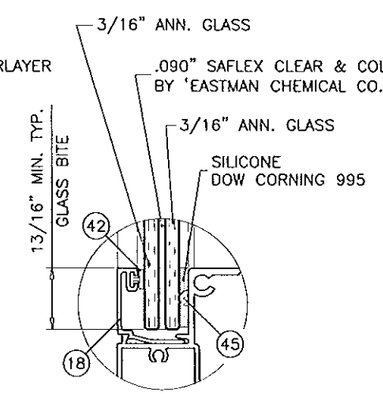

SERIES 1040

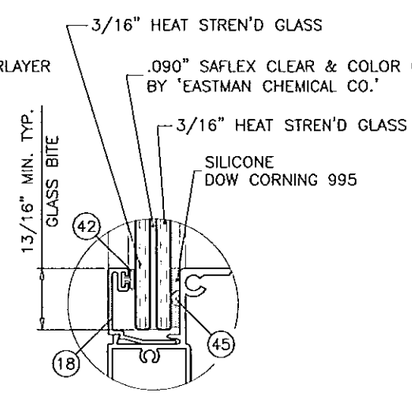

SERIES 1041

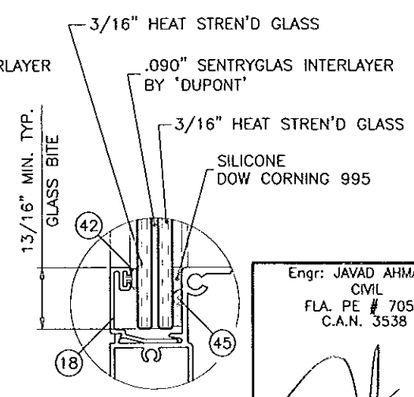

SERIES 1062

GLAZING OPTIONS

Engr: JAVAD AHMAD
CIVIL
FLA. PE # 70592
C.A.N. 3538

OCT 04 2013

PRODUCT REVISED
as complying with the Florida Building Code
Acceptance No 13-1024.05
Expiration Date Feb. 19, 2019
By Manuel Perez
Miami Dade Product Control

AL-FAROOQ CORPORATION
ENGINEERS & PRODUCT DEVELOPMENT
1235 S.W. 87 AVE
MIAMI, FLORIDA 33174
TEL (305) 264-8100 FAX. (305) 262-6978
COMP-ANL\W03-53IWC

ALUMINUM SINGLE HUNG WINDOW (L.M.I.)

INNOVATIVE WINDOW CONCEPTS, LLC
1801 CORPORATE DRIVE
BOYNTON BEACH, FL. 33426
TEL. (561) 493-2303 FAX. (561) 493-2302

revisions:

no	date	by	description
B	09.06.05		CHARTS REV.
C	02.01.06		NO CHANGE THIS SHEET
D	11.06.08		UPDATED FOR 2007 FBC
E	02.09.12		UPDATED TO 2010 FBC
F	10.01.13		INTERLAYERS REV.

date: 07-14-03
scale: 1/2"=1'-0"
dr. by: HAMID
chk. by:

drawing no.
W03-53

EQUAL LITES WINDOWS

DESIGN LOAD CAPACITY – PSF

FLANGE DIMS.		SERIES 1030		SERIES 1040		SERIES 1041		SERIES 1062	
WIDTH	HEIGHT	EXT.(+)	INT.(–)	EXT.(+)	INT.(–)	EXT.(+)	INT.(–)	EXT.(+)	INT.(–)
19-1/8"	26" (2)	65.0	72.5	62.0	62.0	65.0	75.0	90.0	130.0
24"		65.0	72.5	62.0	62.0	65.0	75.0	90.0	130.0
26-1/2"		65.0	72.5	62.0	62.0	65.0	75.0	90.0	130.0
32"		65.0	72.5	62.0	62.0	65.0	75.0	90.0	130.0
37"		65.0	72.5	62.0	62.0	65.0	75.0	90.0	130.0
40"		65.0	72.5	62.0	62.0	65.0	75.0	90.0	130.0
48"		65.0	72.5	62.0	62.0	65.0	75.0	90.0	130.0
53-1/8"		65.0	72.5	62.0	62.0	65.0	75.0	90.0	130.0
19-1/8"	38-3/8" (3)	65.0	72.5	62.0	62.0	65.0	75.0	90.0	130.0
24"		65.0	72.5	62.0	62.0	65.0	75.0	90.0	130.0
26-1/2"		65.0	72.5	62.0	62.0	65.0	75.0	90.0	130.0
32"		65.0	72.5	62.0	62.0	65.0	75.0	90.0	130.0
37"		65.0	72.5	62.0	62.0	65.0	75.0	90.0	130.0
40"		65.0	72.5	62.0	62.0	65.0	75.0	90.0	130.0
48"		65.0	72.5	62.0	62.0	65.0	75.0	90.0	130.0
53-1/8"		65.0	72.5	62.0	62.0	65.0	75.0	90.0	130.0
19-1/8"	50-5/8" (4)	65.0	72.5	62.0	62.0	65.0	75.0	90.0	130.0
24"		65.0	72.5	62.0	62.0	65.0	75.0	90.0	130.0
26-1/2"		65.0	72.5	62.0	62.0	65.0	75.0	90.0	130.0
32"		65.0	72.5	62.0	62.0	65.0	75.0	90.0	130.0
37"		65.0	72.5	62.0	62.0	65.0	75.0	90.0	130.0
40"		65.0	72.5	62.0	62.0	65.0	75.0	90.0	130.0
48"		65.0	72.5	62.0	62.0	65.0	75.0	90.0	130.0
53-1/8"		64.4	64.4	62.0	62.0	65.0	75.0	90.0	130.0
19-1/8"	63" (5)	65.0	72.5	62.0	62.0	65.0	75.0	90.0	130.0
24"		65.0	72.5	62.0	62.0	65.0	75.0	90.0	130.0
26-1/2"		65.0	72.5	62.0	62.0	65.0	75.0	90.0	130.0
32"		65.0	72.5	62.0	62.0	65.0	75.0	90.0	130.0
37"		65.0	72.5	62.0	62.0	65.0	75.0	90.0	130.0
40"		65.0	72.5	62.0	62.0	65.0	75.0	90.0	130.0
48"		64.9	64.9	62.0	62.0	65.0	75.0	90.0	130.0
53-1/8"		56.0	56.0	62.0	62.0	65.0	75.0	90.0	121.8
19-1/8"	76" (6)	65.0	72.5	62.0	62.0	65.0	75.0	90.0	130.0
24"		65.0	72.5	62.0	62.0	65.0	75.0	90.0	130.0
26-1/2"		65.0	72.5	62.0	62.0	65.0	75.0	90.0	130.0
32"		65.0	72.5	62.0	62.0	65.0	75.0	90.0	130.0
37"		65.0	72.5	62.0	62.0	65.0	75.0	90.0	130.0
40"		65.0	72.5	62.0	62.0	65.0	75.0	90.0	130.0
48"		–	–	62.0	62.0	65.0	75.0	90.0	130.0
53-1/8"		–	–	62.0	62.0	65.0	75.0	90.0	111.7
19-1/8"	84" (7)	65.0	72.5	62.0	62.0	65.0	75.0	90.0	130.0
24"		65.0	72.5	62.0	62.0	65.0	75.0	90.0	130.0
26-1/2"		65.0	72.5	62.0	62.0	65.0	75.0	90.0	130.0
32"		65.0	72.5	62.0	62.0	65.0	75.0	90.0	130.0
37"		65.0	72.5	62.0	62.0	65.0	75.0	90.0	130.0
40"		–	–	62.0	62.0	65.0	75.0	90.0	130.0
48"		–	–	62.0	62.0	65.0	75.0	90.0	130.0
19-1/8"	96" (8)	65.0	72.5	62.0	62.0	65.0	75.0	90.0	130.0
24"		65.0	72.5	62.0	62.0	65.0	75.0	90.0	130.0
26-1/2"		65.0	72.5	62.0	62.0	65.0	75.0	90.0	130.0
32"		65.0	72.5	62.0	62.0	65.0	75.0	90.0	130.0
37"		–	–	62.0	62.0	65.0	75.0	90.0	130.0
40"		–	–	62.0	62.0	65.0	75.0	90.0	130.0

* NO. IN PARENTHESIS INDICATE NO. OF ANCHORS PER JAMB.

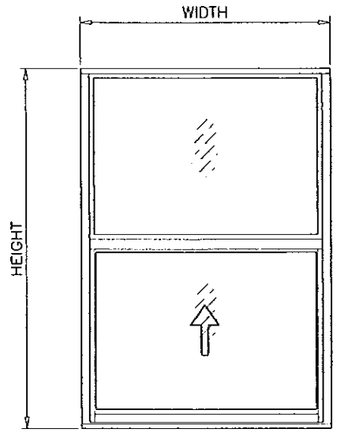

EQUAL LITES

NOTE:
GLASS CAPACITIES ON THIS SHEET ARE BASED ON ASTM E1300-09 (3 SEC. GUSTS) AND FLORIDA BUILDING COMMISSION DECLARATORY STATEMENT DCA05-DEC-219

Engr: JAVAD AHMAD
CIVIL
FLA. PE # 70592
C.A.N. 3538

OCT 0 2 2013

PRODUCT REVISED
as complying with the Florida Building Code
Acceptance No 13-1024.05
Expiration Date Feb. 19, 2019
By Manuel Lerz
Miami Dade Product Control

AL-FAROOQ CORPORATION
ENGINEERS & PRODUCT DEVELOPMENT
1235 S.W. 87 AVE
MIAMI, FLORIDA 33174
TEL. (305) 264-8100 FAX. (305) 262-6978
COMP-ANL\W03-53IWC

ALUMINUM SINGLE HUNG WINDOW (L.M.I.)

INNOVATIVE WINDOW CONCEPTS, LLC
1801 CORPORATE DRIVE
BOYNTON BEACH, FL. 33426
TEL. (561) 493-2303 FAX. (561) 493-2302

revisions:

no	date	by	description
B	09.06.05		CHARTS REV.
C	02.01.06		REV. PER BCCO COMMENTS
D	11.06.08		UPDATED FOR 2007 FBC
E	02.09.12		UPDATED TO 2010 FBC
F	10.01.13		NO CHANGE THIS SHEET

date: 07-14-03
scale: 1/2" = 1"
dr. by: HAMID
chk. by:

drawing no.
W03-53

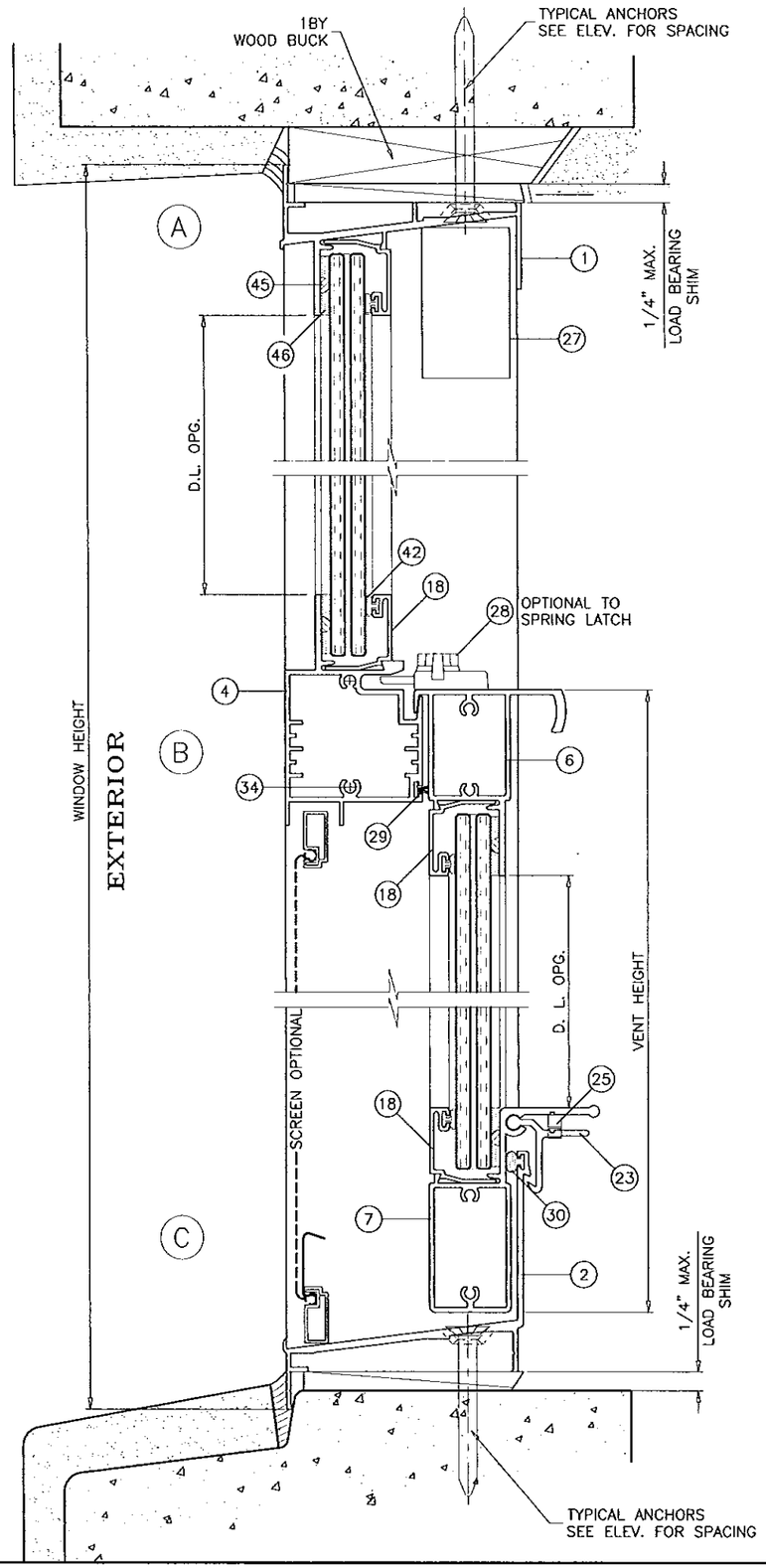

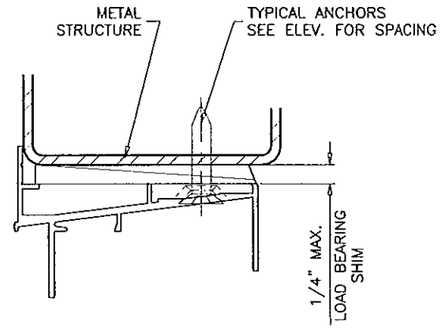

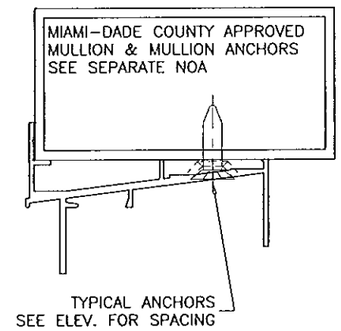

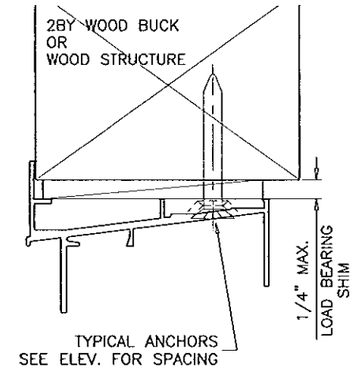

WOOD BUCKS AND METAL STRUCTURE NOT BY I.W.C. MUST SUSTAIN LOADS IMPOSED BY GLAZING SYSTEM AND TRANSFER THEM TO THE BUILDING STRUCTURE.

TYPICAL ANCHORS: SEE ELEV. FOR SPACING

1/4" DIA. ULTRACON BY 'ELCO' (Fu=177 KSI, Fy=155 KSI)

INTO 2BY WOOD BUCKS OR WOOD STRUCTURES
1-1/2" MIN. PENETRATION INTO WOOD

THRU 1BY BUCKS INTO CONC. OR MASONRY
1-1/4" MIN. EMBED INTO CONC. OR MASONRY

DIRECTLY INTO CONC. OR MASONRY
1-1/4" MIN. EMBED INTO CONC. OR MASONRY

#14 SMS OR SELF DRILLING SCREWS (GRADE 2 CRS)

INTO METAL STRUCTURES

STEEL : 12 GA. MIN. (Fy = 36 KSI MIN.)
ALUMINUM : 1/8" THK. MIN. (6063-T5 MIN.)
(STEEL IN CONTACT WITH ALUMINUM TO BE PLATED OR PAINTED)

#12 SMS OR SELF DRILLING SCREWS

INTO MIAMI-DADE COUNTY APPROVED MULLIONS (MIN. THK. = .090")
(NO SHIM SPACE)

TYPICAL EDGE DISTANCE

INTO CONCRETE AND MASONRY = 2-1/2" MIN.
INTO WOOD STRUCTURE = 1" MIN.
INTO METAL STRUCTURE = 3/4" MIN.

CONCRETE f'c = 3000 PSI MIN.
MASONRY f'm = 1500 PSI MIN.

SEALANT:

ALL JOINTS AND FRAME CONNECTIONS SEALED WITH SCHNEE MOREHEAD SEAM SEALER SM5504.

Engr: JAVAD AHMAD
CIVIL
FLA. PE # 70592
C.A.N. 3538

OCT 02 2013

PRODUCT REVISED
as complying with the Florida
Building Code
Acceptance No 13-1024.05
Expiration Date Feb. 19, 2019
By Manuel Perez
Miami Dade Product Control

AL-FAROOQ CORPORATION
ENGINEERS & PRODUCT DEVELOPMENT
1235 S.W. 87 AVE
MIAMI, FLORIDA 33174
TEL. (305) 264-8100 FAX. (305) 262-6978
COMP-ANL\W03-53IWC

ALUMINUM SINGLE HUNG WINDOW (L.M.I.)

INNOVATIVE WINDOW CONCEPTS, LLC
1801 CORPORATE DRIVE
BOYNTON BEACH, FL. 33426
TEL. (561) 493-2303 FAX. (561) 493-2302

revisions:

no	date	by	description
B	09.06.05		ANCHORS REV.
C	02.01.06		REV. PER BCCO COMMENTS
D	11.06.08		UPDATED FOR 2007 FBC
E	02.09.12		NO CHANGE THIS SHEET
F	10.01.13		NO CHANGE THIS SHEET

date: 07-14-03
scale: 1/2" = 1"
dr. by: HAMID
chk. by:

drowing no.
W03-53

sheet 4 of 6

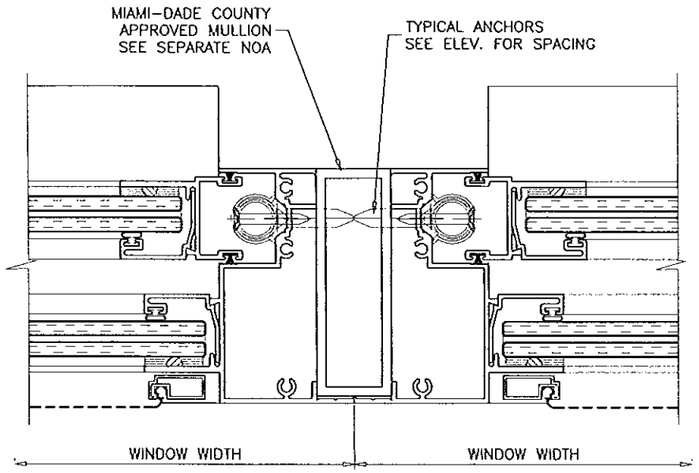

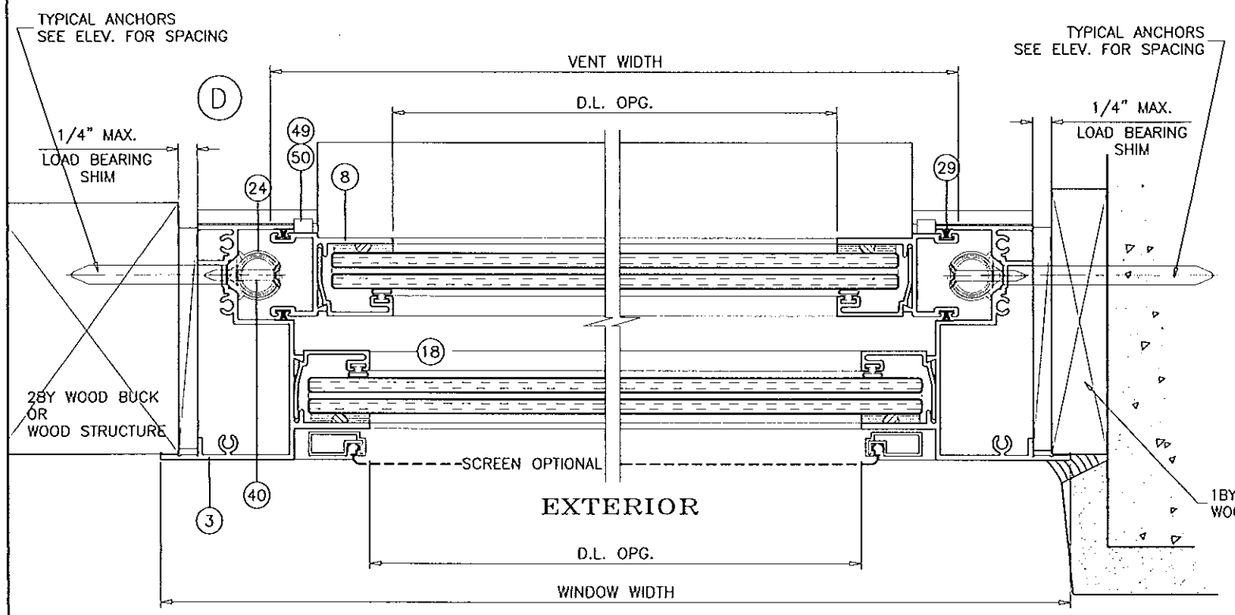

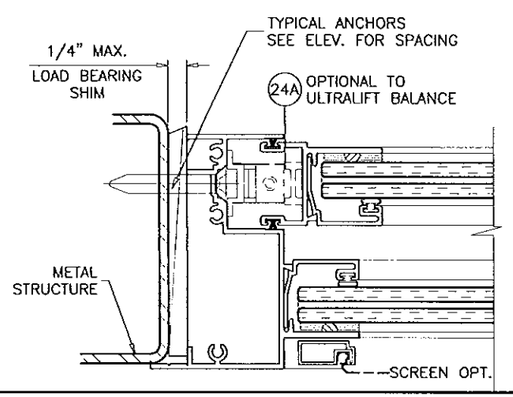

ITEM NO.	PART NO.	QUANTITY	DESCRIPTION	MATERIAL	MANF./SUPPLIER/REMARKS
1	021-029	1	FRAME HEAD	6063-T6	ARCH ALUM.
2	021-002	1	FRAME SILL	6063-T6	ARCH ALUM.
3	021-005	2	FRAME JAMB	6063-T6	ARCH ALUM.
4	022-007	1	MTG. RAIL	6063-T5	ARCH ALUM.
6	022-004	1	VENT TOP RAIL	6063-T5	ARCH ALUM.
7	022-001	1	VENT BOTTTOM RAIL	6063-T5	ARCH ALUM.
8	021-003	2	VENT SIDE RAIL	6063-T5	ARCH ALUM.
18	021-011	4/ LITE	GLAZING BEAD	6063-T5	ARCH ALUM.
18A	021-012	4/ LITE	GLAZING BEAD	6063-T5	ARCH ALUM.
23	021-008	2/ VENT	SNAP LATCH (2 @ 3" LG)	6063-T5	ARCH ALUM.
24	025-000	2	ULTRA LIFT BALANCE		CALDWELL MFG
24A	024-000	2	BLOCK & TACKLE BALANCE		BSI
25	006-001	2	SPRING	ST/ST	IND. SPRING
26	004-005	–	UEK BRACKET	STEEL	CALDWELL MFG
27	010-001	–	SASH STOP	RIGID VINYL	MASTER TOOL
28	004-002	–	SWEEP LOCK @ 7" FROM ENDS	METAL	SULLIVAN & ASSOC.
29	016-001	AS REQD.	FIN SEAL	WOOL PILE	ULTRA FAB
30	023-001	–	FILLED BULB VINYL		AMESBURY
31	015-009	–	CHIMNEY PLUG	CLOSED CELL	FRANK LOWE RUBBR
33	008-014	AS REQD.	#8X1 PHPH SMS	ST/ST	
34	008-031	2/ END	#10X1 PHPH SMS	ST/ST	
37	012-001	–	SEAM SEALER SM5504	ACRYLIC	SCHNEE MOREHEAD
39	008-010	–	#8X1/2 UCFHPH SMS	ST/ST	
40	008-017	–	#8X1 1/4 FHPH SMS	ST/ST	
42	015-001	AS REQD.	BULB VINYL	VINYL	MASTER TOOL
42A	015-007	AS REQD.	WEDGE GASKET	VINYL	–
45	015-006	–	0.150 SPACER	VINYL	FRANK LOWE RUBBR
45A	015-004	–	1/16 X .400 SPACER	VINYL	FRANK LOWE RUBBR
46	012-004	–	DOW 995	SILICONE	DOW CORNING
49	010-010	–	SASH GUIDE TOP	RIGID PVB	M & M PLASTICS
50	010-011	–	SASH GUIDE BOT	RIGID PVB	M & M PLASTICS
51	008-002	–	#6X1/2 FHPH SMS	ST/ST	
55	003-001	AS REQD.	ROLL FORM SCREEN FRAME	ALUMINUM	FLORIDA SCREEN

Engr: JAVAD AHMAD
CIVIL
FLA. PE # 70592
C.A.N. 3538

OCT 0 2 2013

PRODUCT REVISED
as complying with the Florida
Building Code
Acceptance No 13-1024.05
Expiration Date Feb. 19, 2019
By Manuel Perez
Miami Dade Product Control

AL-FAROOQ CORPORATION
ENGINEERS & PRODUCT DEVELOPMENT
1235 S.W. 87 AVE
MIAMI, FLORIDA 33174
TEL (305) 264-8100 FAX. (305) 262-6978
COMP-ANL\W03-53IWC

ALUMINUM SINGLE HUNG WINDOW (L.M.I.)

INNOVATIVE WINDOW CONCEPTS, LLC
1801 CORPORATE DRIVE
BOYNTON BEACH, FL. 33426
TEL (561) 493-2303 FAX. (561) 493-2302

revisions:

no	date	by	description
B	09.06.05		NO CHANGE THIS SHEET
C	02.01.06		REV. PER BCCO COMMENTS
D	11.06.08		UPDATED FOR 2007 FBC
E	02.09.12		UPDATED TO 2010 FBC
F	10.01.13		NO CHANGE THIS SHEET

date: 07-14-03
scale: 1/2" = 1"
dr. by: HAMID
chk. by:

drawing no.
W03-53

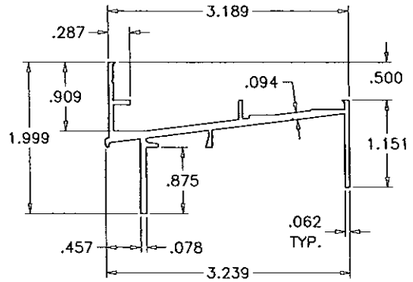

1 FRAME HEAD

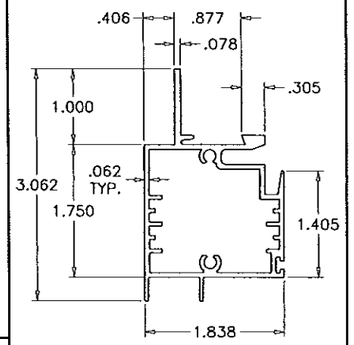

4 FIXED MEETING RAIL

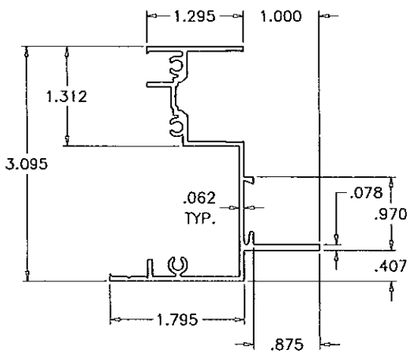

3 FRAME JAMB

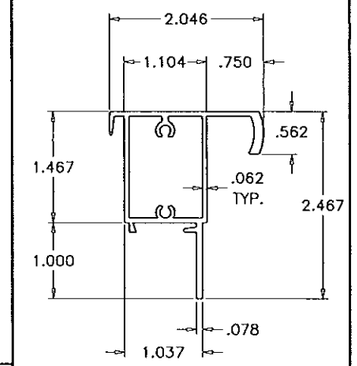

6 VENT TOP RAIL

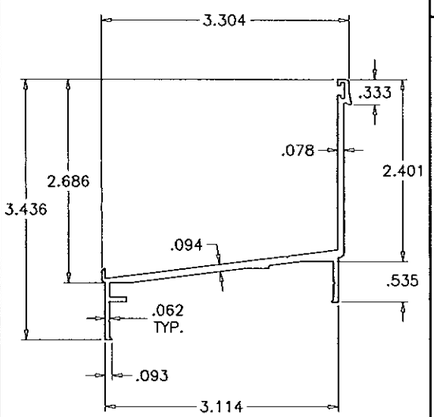

2 FRAME SILL

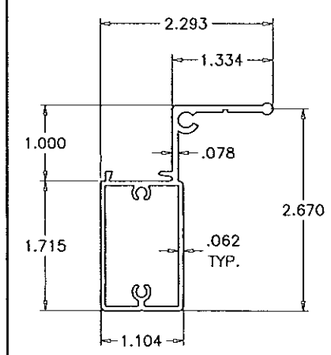

7 VENT BOTTOM RAIL

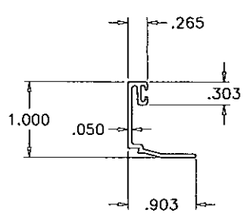

18 GLAZING BEAD

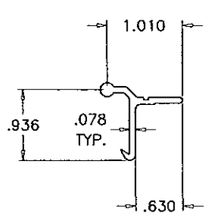

23 LATCH

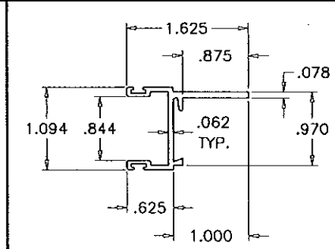

8 VENT SIDE RAIL

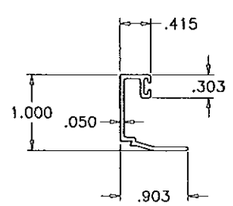

18A GLAZING BEAD

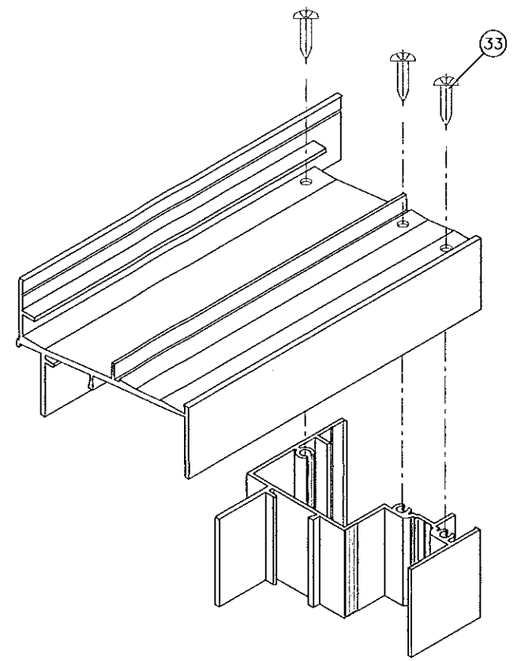

FRAME CORNERS

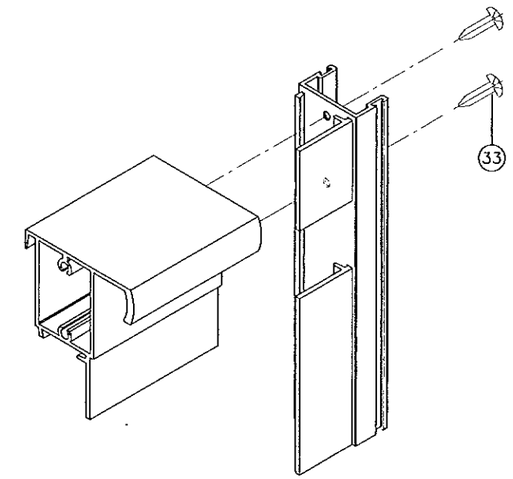

VENT TOP CORNER

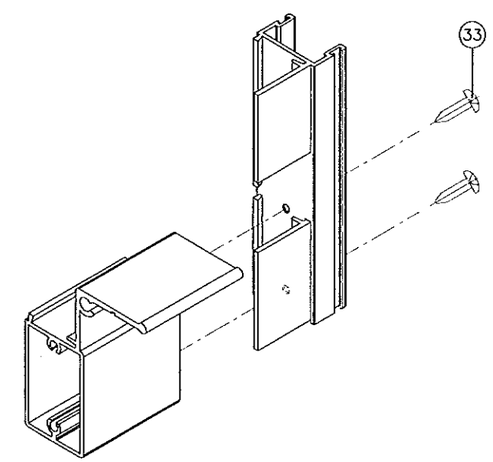

VENT BOTTOM CORNER

Engr: JAVAD AHMAD
CIVIL
FLA. PE # 70592
C.A.N. 3538

OCT 0 2 2013

PRODUCT REVISED
as complying with the Florida
Building Code
Acceptance No 13-1024.05
Expiration Date Feb. 19, 2019
By Manuel Perez
Miami Dade Product Control

AL-FAROOQ CORPORATION
ENGINEERS & PRODUCT DEVELOPMENT
1235 S.W. 87 AVE
MIAMI, FLORIDA 33174
TEL. (305) 264-8100 FAX. (305) 262-6978
COMP-ANL\W03-531WC

ALUMINUM SINGLE HUNG WINDOW (L.M.I.)

INNOVATIVE WINDOW CONCEPTS, LLC
1801 CORPORATE DRIVE
BOYNTON BEACH, FL. 33426
TEL. (561) 493-2303 FAX. (561) 493-2302

revisions:

no	date	by	description
B	09.06.05		NO CHANGE THIS SHEET
C	02.01.06		NO CHANGE THIS SHEET
D	11.06.08		UPDATED FOR 2007 FBC
E	02.09.12		NO CHANGE THIS SHEET
F	10.01.13		NO CHANGE THIS SHEET

date: 07-14-03
scale: 1/2" = 1"
dr. by: HAMID
chk. by:

drawing no.
W03-53