MIAMI-DADE COUNTY
PRODUCT CONTROL SECTION
11805 SW 26 Street, Room 208
Miami, Florida 33175-2474
T (786) 315-2590 F (786) 315-2599
www.miamidade.gov/economy

DEPARTMENT OF REGULATORY AND ECONOMIC RESOURCES (RER)
BOARD AND CODE ADMINISTRATION DIVISION

NOTICE OF ACCEPTANCE (NOA)

The Folding Sliding Door Company, LLC
240 Spring View Commerce Drive, Bldg. #1
Debary, FL 32713

SCOPE:

This NOA is being issued under the applicable rules and regulations governing the use of construction materials. The documentation submitted has been reviewed and accepted by Miami-Dade County RER -Product Control Section to be used in Miami Dade County and other areas where allowed by the Authority Having Jurisdiction (AHJ).

This NOA shall not be valid after the expiration date stated below. The Miami-Dade County Product Control Section (In Miami Dade County) and/or the AHJ (in areas other than Miami Dade County) reserve the right to have this product or material tested for quality assurance purposes. If this product or material fails to perform in the accepted manner, the manufacturer will incur the expense of such testing and the AHJ may immediately revoke, modify, or suspend the use of such product or material within their jurisdiction. RER reserves the right to revoke this acceptance, if it is determined by Miami-Dade County Product Control Section that this product or material fails to meet the requirements of the applicable building code.

This product is approved as described herein, and has been designed to comply with the Florida Building Code, including the High Velocity Hurricane Zone.

DESCRIPTION: Series HD-82 Aluminum in folding Door-L.M.I.

APPROVAL DOCUMENT: Drawing No. **FSD005 Rev C**, titled "Series HD82-70 In folding", sheets 1 through 11 of 11, prepared by Building Drops, Inc., dated 09/24/13 and last revised on 02-11-2015, signed and sealed by Hermes F. Norero, P.E., bearing the Miami-Dade County Product Control Approval stamp with the Notice of Acceptance number and approval date by the Miami-Dade County Product Control Section.

MISSILE IMPACT RATING: Large and Small Missile Impact Resistant

Limitations:

1. See Design Pressure rating Vs glazing types and sill types (Limited Water Barrier threshold detail **A/5** or Recess threshold detail **X/11 & Y/11**) in sheet **1**. See anchor layout, including Jamb anchor Schedule in sheet **2**.
2. See sheet **8** for max frame size (max. frame height x max frame width) to arrange various qualified in folding configurations. The max panel size **not** to exceed tested 36-1/8" wide and 91-1/4" high, in any configuration.
3. Water Barrier threshold is limited to +25 PSF. Recess threshold is **not** approved for water resistant unless complies w/ FBC requirements.

LABELING: Each unit shall bear a permanent label with the manufacturer's name or logo, city, state and series and following statement: "Miami-Dade County Product Control Approved", noted herein.

RENEWAL of this NOA shall be considered after a renewal application has been filed and there has been no change in the applicable building code negatively affecting the performance of this product.

TERMINATION of this NOA will occur after the expiration date or if there has been a revision or change in the materials, use, and/or manufacture of the product or process. Misuse of this NOA as an endorsement of any product, for sales, advertising or any other purposes shall automatically terminate this NOA. Failure to comply with any section of this NOA shall be cause for termination and removal of NOA.

ADVERTISEMENT: The NOA number preceded by the words Miami-Dade County, Florida, and followed by the expiration date may be displayed in advertising literature. If any portion of the NOA is displayed, then it shall be done in its entirety.

INSPECTION: A copy of this entire NOA shall be provided to the user by the manufacturer or its distributors and shall be available for inspection at the job site at the request of the Building Official.

This NOA consists of this page 1 and evidence pages E-1 & E-2, as well as approval document mentioned above. The submitted documentation was reviewed by **Ishaq I. Chanda, P.E.**

MIAMI-DADE COUNTY APPROVED
2/17/15

NOTICE OF ACCEPTANCE: EVIDENCE SUBMITTED

A. DRAWINGS

1. Manufacturer's die drawings and sections.
2. Drawing No. **FSD005 Rev C**, titled "Series HD82-70 In folding", sheets 1 through 11 of 11, prepared by Building Drops, Inc., dated 09/24/13 and last revised on 02-11-2015, signed and sealed by Hermes F. Norero, P.E.

B. TESTS

1. Test reports on: 1) Air Infiltration Test, per FBC, TAS 202-94
   2) Uniform Static Air Pressure Test, Loading per FBC TAS 202-94
   3) Water Resistance Test, per FBC, TAS 202-94 (See applicable threshold)
   4) Large Missile Impact Test per FBC, TAS 201-94
   5) Cyclic Wind Pressure Loading per FBC, TAS 203-94
   6) Forced Entry Test, per FBC 2411 3.2.1, TAS 202-94

along with marked-up drawings and installation diagram of aluminum In/out folding doors, prepared by National Certified Testing Lab, Test Report No. **NCTL-210-3846-1,** dated 02/0/13 signed and sealed by Gerald J. Ferrara, P. E.
(Note: This test report was re-issued by National certified Testing Lab with name change on 07/18/14, signed & sealed by Gerald J. Ferrara, P.E. This test report also has an addendum letter dated 02/19/14, issued by the lab.)

C. CALCULATIONS

1. Anchor verification calculations and structural analysis, complying with FBC-2010, prepared by Building Drops Inc., dated 10/21/13, 05/05/14 and last revised on 10-16-2014, signed and sealed by Hermes F. Norero, P.E.
2. Glazing complies w/ ASTME-1300-02 & -04

D. QUALITY ASSURANCE

1. Miami Dade Department of Regulatory and Economic Resources (RER).

E. MATERIAL CERTIFICATIONS

1. Notice of Acceptance No. **11-0624.02** issued to E.I. DuPont DeNemours & Co., Inc. for their "**DuPont Sentry Glass ®**", expiring on 01/14/17.
2. Test reports for Technoform18.6mm Flat I-Strut, Test reports No. **ETC-07-1043-19094.0,** dated 02/18/08 and **ETC-07-1043-20048.0** dated 09/19/07, issued by ETC Laboratories for Xenon Arch weathering per ASTM G-26 and tensile test per ASTMD-638 , signed by Joseph L. Doldan, P.E. and Test report No. **60520.01-106-18** dated 12/14/05, issued by Architectural Testing for " Technoform I-Strut" for smoke density per ASTMD-2843 and rate of burning per ASTMD-635, signed and sealed by Joseph A. Reed, P.E.
3. Technical strength properties cut sheet of LMI Custom Mixing's EPDM compound #D04080-03 per ASTMC846, extruded by Performance Elastomers.

Ishaq I. Chanda

Ishaq I. Chanda, P.E.
Product Control Examiner
NOA No. 13-1028.04
Expiration Date: February 19, 2020
Approval Date: February 19, 2015

NOTICE OF ACCEPTANCE: EVIDENCE SUBMITTED

F. STATEMENTS

1. Statement letter of conformance FBC 2010 and letter of no financial interest, Building Drops Inc., dated 04/24/13, signed and sealed by Hermes F. Norero, P.E.
2. Statement letters dated 07/14/14 from Folding Door Company limited (UK) and Folding Door Company, LLC to cancel original NOA application and distribution agreement, signed by Kehinde Jolaoso, Managing Director and David Shearman, C. E. O. on behalf of their respective companies.
3. Addendum letter dated 02/19/14, issued by National Certified Testing Lab, signed and sealed by Gerald J. Ferrara, P. E.
4. Lab compliance as part of the above referenced test report.

G. OTHER

1. Test proposal **#12-0911** dated June 12, 2012, approved by RER.
2. Commercial relation-Supply agreement of propriety hardware between Folding Sliding Door limited (UK) and Folding Sliding Door Company, LLC (USA).
3. Summary of conference call dated July 10, 2014 issued by RER.

Ishaq I. Chanda

Ishaq I. Chanda, P.E.
Product Control Examiner
NOA No. 13-1028.04
Expiration Date: February 19, 2020
Approval Date: February 19, 2015

THE FOLDING SLIDING DOOR COMPANY

HD82-70 MM FOLDING INFOLDING DOOR SYSTEM

INSTALLATION NOTES:

1. ONE (1) INSTALLATION ANCHOR IS REQUIRED AT EACH ANCHOR LOCATION SHOWN.
2. THE NUMBER OF INSTALLATION ANCHORS DEPICTED IS THE MINIMUM NUMBER OF ANCHORS TO BE USED FOR PRODUCT INSTALLATION.
3. INSTALL INDIVIDUAL INSTALLATION ANCHORS WITHIN A TOLERANCE OF ±1/16 INCH OF THE DEPICTED LOCATION IN THE ANCHOR LAYOUT DETAIL (I.E., WITHOUT CONSIDERATION OF TOLERANCES). TOLERANCES ARE NOT CUMULATIVE FROM ONE INSTALLATION ANCHOR TO THE NEXT.
4. SHIM AS REQUIRED AT EACH INSTALLATION ANCHOR WITH LOAD BEARING SHIM(S). MAXIMUM ALLOWABLE SHIM STACK TO BE 1/4 INCH. SHIM WHERE SPACE OF 1/16 INCH OR GREATER OCCURS. SHIM(S) SHALL BE CONSTRUCTED OF HIGH DENSITY PLASTIC OR BETTER.
5. FOR INSTALLATION INTO 2X WOOD FRAMING USE #12 WOOD SCREWS OF SUFFICIENT LENGTH TO ACHIEVE 3 INCH MINIMUM EMBEDMENT INTO WOOD SUBSTRATE WITH MINIMUM 1 INCH EDGE DISTANCE.
6. FOR INSTALLATION THROUGH PROPERLY SECURED 1X BUCK TO CONCRETE/MASONRY, OR DIRECTLY INTO CONCRETE/MASONRY, USE 1/4 INCH DIAMETER ITW TAPCONS OR ELCO ULTRACONS OF SUFFICIENT LENGTH TO ACHIEVE 1 3/4 INCH MINIMUM EMBEDMENT WITH MINIMUM 2 1/2 INCH EDGE DISTANCE.
7. FOR INSTALLATION INTO 33 KSI STEEL STUD USE 1/4 INCH DIAMETER GR. 5 TEK SCREWS OF SUFFICIENT LENGTH TO ACHIEVE THREE (3) THREADS MINIMUM PENETRATION BEYOND THE STEEL STRUCTURE.
8. MINIMUM EMBEDMENT AND EDGE DISTANCE EXCLUDE WALL FINISHES, INCLUDING BUT NOT LIMITED TO STUCCO, FOAM, BRICK VENEER, AND SIDING.
9. INSTALLATION ANCHORS AND ASSOCIATED HARDWARE MUST BE MADE OF CORROSION RESISTANT MATERIAL OR HAVE A CORROSION RESISTANT COATING.
10. FOR GROUT FILLED OR HOLLOW BLOCK, DO NOT INSTALL INSTALLATION ANCHORS INTO MORTAR JOINTS. EDGE DISTANCE IS MEASURED FROM FREE EDGE OF BLOCK OR EDGE OF MORTAR JOINT INTO FACE SHELL OF BLOCK.
11. INSTALLATION ANCHORS SHALL BE INSTALLED IN ACCORDANCE WITH ANCHOR MANUFACTURER'S INSTALLATION INSTRUCTIONS, AND ANCHORS SHALL NOT BE USED IN SUBSTRATES WITH STRENGTHS LESS THAN THE MINIMUM STRENGTH SPECIFIED IN THIS APPROVAL.
12. INSTALLATION ANCHOR CAPACITIES FOR PRODUCTS HEREIN ARE BASED ON SUBSTRATE MATERIALS WITH THE FOLLOWING PROPERTIES:
    A. WOOD - MINIMUM SPECIFIC GRAVITY OF 0.55.
    B. CONCRETE -MINIMUM COMPRESSIVE STRENGTH OF 3000 PSI.
    C. GROUT-FILLED CMU- UNIT STRENGTH CONFORMS TO ASTM C-90 WITH MINIMUM COMPRESSIVE STRENGTH OF 1924 PSI AND GROUT CONFORMS TO ASTM C 476, MINIMUM GROUT COMPRESSIVE STRENGTH OF 2000 PSI.
    D. STEEL - MINIMUM YIELD STRENGTH OF 33 KSI. MINIMUM WALL THICKNESS OF 43 MIL (0.0428" or 18 GAUGE). MIN. 1/2" EDGE DISTANCE.
13. FOR INSTALLATION OF RECESSED THRESHOLD 3X8 WOOD BUCK OR CONCRETE MUST BE RECESSED AND/OR ROUTED TO ACCOMMODATE THESE COMPONENTS PRIOR TO INSTALLATION. SEE DETAILS X/11 INTO WOOD AND Y/11 INTO CONCRETE SHEET 11 FOR TYPICAL DETAILS.

GENERAL NOTES:

1. THE PRODUCT SHOWN HEREIN IS DESIGNED AND MANUFACTURED TO COMPLY WITH THE 2010 FLORIDA BUILDING CODE (FBC), INCLUDING HVHZ AND HAS BEEN EVALUATED ACCORDING TO THE FOLLOWING:
    - TAS 201-94
    - TAS 202-94
    - TAS 203-94
2. ADEQUACY OF THE EXISTING STRUCTURAL CONCRETE/MASONRY, 2X WOOD & STEEL FRAMING AS A MAIN WIND FORCE RESISTING SYSTEM CAPABLE OF WITHSTANDING AND TRANSFERRING APPLIED PRODUCT LOADS TO THE FOUNDATION IS THE RESPONSIBILITY OF THE ENGINEER OR ARCHITECT OF RECORD FOR THE PROJECT OF INSTALLATION.
3. 1X AND 2X BUCKS (WHEN USED) SHALL BE DESIGNED AND ANCHORED TO PROPERLY TRANSFER ALL LOADS TO THE STRUCTURE. BUCK DESIGN AND INSTALLATION IS THE RESPONSIBILITY OF THE ENGINEER OR ARCHITECT OF RECORD FOR THE PROJECT OF INSTALLATION.
4. THE INSTALLATION DETAILS DESCRIBED HEREIN ARE GENERIC AND MAY NOT REFLECT ACTUAL CONDITIONS FOR A SPECIFIC SITE. IF SITE CONDITIONS CAUSE INSTALLATION TO DEVIATE FROM THE REQUIREMENTS DETAILED HEREIN, A LICENSED ENGINEER OR ARCHITECT SHALL PREPARE SITE SPECIFIC DOCUMENTS FOR USE WITH THIS DOCUMENT. FOR NON-HVHZ AREA, INSTALLATION TO BE REVIEWED BY AHJ (AUTHORITY HAVING JURISDICTION).
5. DEVIATION FROM THE CORRESPONDING FLORIDA PRODUCT APPROVAL IN HVHZ AREA REQUIRES A ONE TIME APPROVAL FROM MIAMI-DADE COUNTY OR AHJ.
6. APPROVED IMPACT PROTECTIVE SYSTEM **IS NOT REQUIRED** ON THIS PRODUCT IN AREAS REQUIRING IMPACT RESISTANCE.
7. DOOR FRAME MATERIAL: ALUMINUM 6063-T5
8. GLASS SHALL MEET THE REQUIREMENTS OF ASTM E 1300-04 GLASS CHARTS. SEE SHEET 7 FOR GLAZING DETAILS.
9. IN ACCORDANCE WITH THE 2010 FBC SEC. 2003.8.4 DISSIMILAR METALS INCLUDING FASTENERS THAT MAY COME INTO CONTACT WITH ALUMINUM UNIT FRAMING SHALL BE PROTECTED AS DEFINED IN SEC 2003.8.4.2.
10. GLAZING GASKETS SHALL MEET THE REQUIREMENTS OF SECTION 2411.3.4 OF THE 2010 FBC.
11. A BEAD OF SEALANT AROUND THE ENTIRE PERIMETER OF FRAME IS TO BE USED TO SEAL SYSTEM TO THE SUBSTRATE.

TABLE OF CONTENTS

SHEET	REVISION	SHEET DESCRIPTION
1	B	INSTALLATION & GENERAL NOTES
2	C	ELEVATION & ANCHOR LAYOUT (1)
3	C	ELEVATION & ANCHOR LAYOUT (2)
4	C	ELEVATION & ANCHOR LAYOUT (3)
5	B	VERTICAL SECTIONS
6	B	HORIZONTAL SECTIONS
7	C	HORIZONTAL SECTIONS & GLAZING DETAILS
8	B	HARDWARE REQUIREMENTS & CONFIGURATIONS
9	C	COMPONENTS & BILL OF MATERIALS (1)
10	B	COMPONENTS & BILL OF MATERIALS (2)
11	B	INSTALLATION PREPARATION DETAILS

DESIGN PRESSURE RATING

GLAZE TYPE	DESIGN PRESSURE		MISSILE IMPACT RATING
1 & 2	+25.0 / -70.0 PSF	WITH WATER INFILTRATION (WATER BARRIER THRESHOLD ABOVE SUBSTRATE)	LARGE AND SMALL MISSILE IMPACT RATED
	+70.0 / -70.0 PSF *	WITHOUT WATER INFILTRATION (WATER BARRIER & RECESS THRESHOLDS)*	

*WHERE WATER INFILTRATION IS REQUIRED, UNIT SHALL BE INSTALLED AT LOCATIONS PROTECTED BY OVERHANG SUCH THAT THE OVERHANG RATIO (OH) = OH LENGTH/OH HEIGHT GREATER THAN 1.0.

Approved as complying with the Florida Building Code
Date FEB 19 2015
NOA# 13-1028.04
Miami-Dade Product Control
By

The Folding Sliding Door Company
Jack of one trade, master of one

THE FOLDING SLIDING DOOR COMPANY
240 SPRING VIEW COMMERCE DRIVE, BLDG1
DEBARY, FL 32713
PH: (214) 234-9112

TITLE: HD82-70 MM FOLDING INFOLDING DOOR SYSTEM INSTALLATION & GENERAL NOTES

PREPARED BY:
BUILDING DROPS, INC.
398 E. DANIA BEACH BLVD. #338
DANIA BEACH, FL 33004
PH: 954.399.8478 FX: 954.744.4738

REVISIONS

NO.	DESCRIPTION	BY	DATE
A	MIAMI-DADE COMMENTS	TM	2.19.14
B	MIAMI-DADE COMMENTS	MS	9.22.14

HENRICES F. NORERO, P.E.
FLORIDA P.E. NO. 73772
398 EAST DANIA BEACH BLVD. #338
DANIA BEACH, FL 33004
FBPE CERT. OF AUTHORIZATION: NO. 29578

DATE: 09.24.13
DWN BY: MSS
CHK BY: HFN
SCALE: NTS

DWG #: FSD005

SHEET: 1 OF 11

2/11/2015 4:13 PM
s:\projects\fsc folding sliding door company\ind-12-0252 (ind submittal - inward and outward folding door)\dwgs\fsd005 2014-02-19.dwg

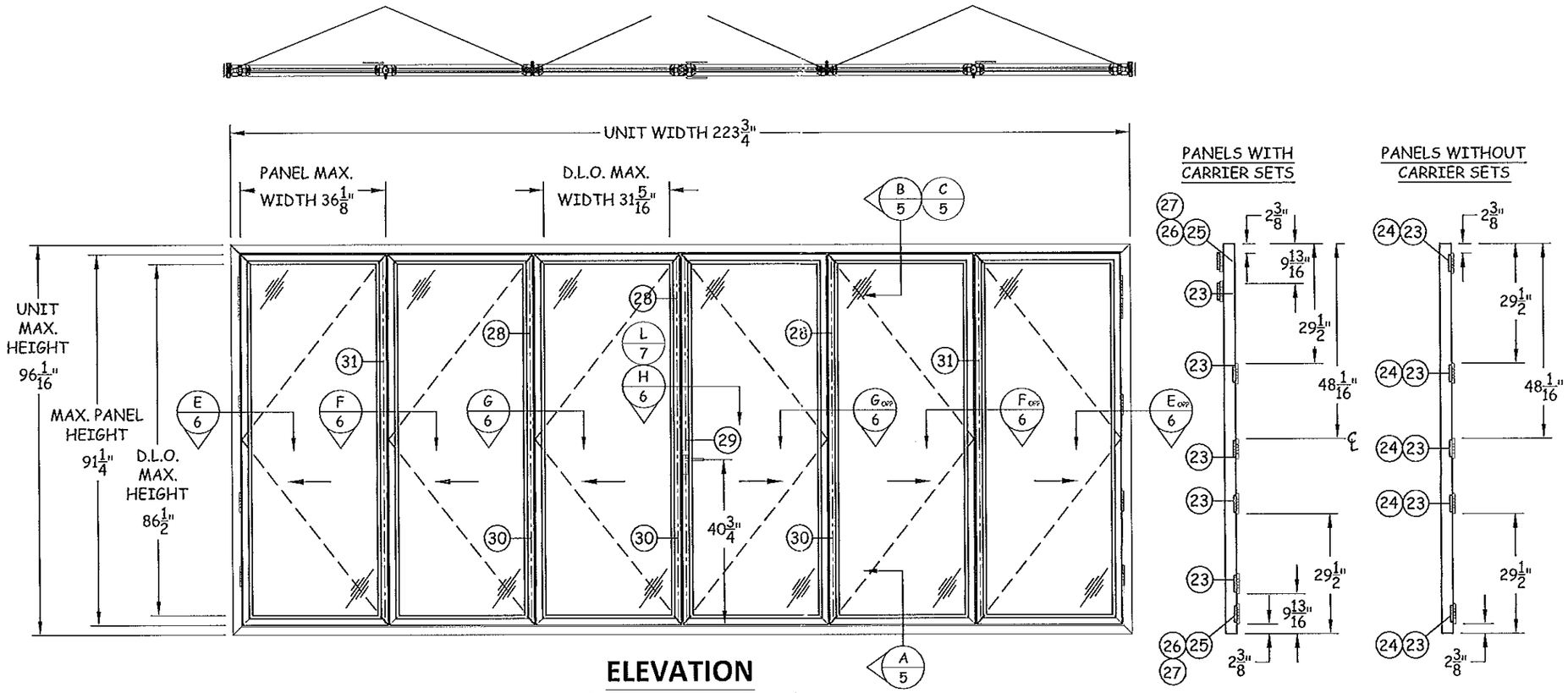

ELEVATION

INSWING 3L3R UNIT SHOWN

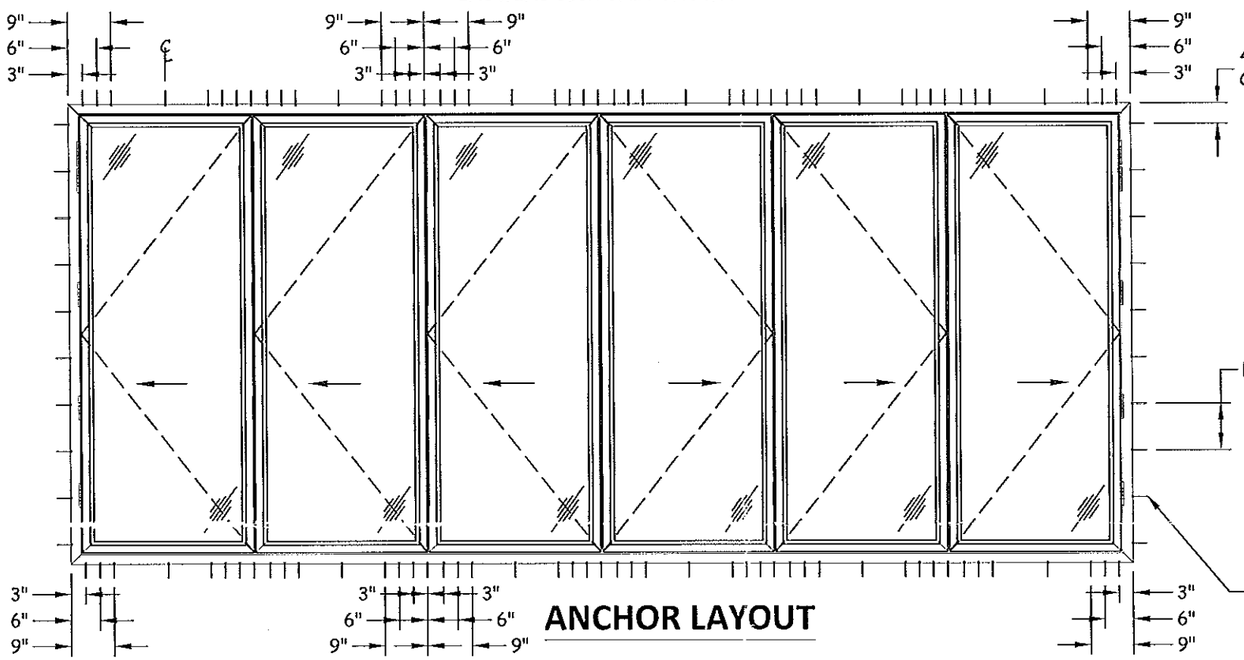

ANCHOR LAYOUT

NOTE:
1. AT JAMBS ONE (1) ADDITIONAL ANCHOR REQUIRED THROUGH EACH HINGE.
2. TESTED SIZE SHOWN. SEE SHEET 8 FOR OTHER QUALIFIED CONFIGURATIONS.
3. MAXIMUM ALLOWED FRAME WIDTH = 1.5 X 223.75" = 335.625" SUCH THAT THE MAXIMUM PANEL SIZE, AS SHOWN HEREIN, IS NOT EXCEEDED.

JAMB ANCHOR SCHEDULE	
SUBSTRATE	O.C. SPACING
WOOD	8 7/8"
CONCRETE/MASONRY	8"
STEEL STUD	5 7/8"

Approved as complying with the Florida Building Code
Date 2/19/15
NOA# 13-1028.04
Miami Dade Product Control
By [signature]

The Folding Sliding Door Company
Jack of one trade, master of one
THE FOLDING SLIDING DOOR COMPANY
240 SPRING VIEW COMMERCE DRIVE, BLDG1
DEBARY, FL 32713
PH: (214) 234-9112

TITLE: HD82-70 MM FOLDING INFOLDING DOOR SYSTEM ELEVATION & ANCHOR LAYOUT (1)

PREPARED BY:
BUILDING DROPS, INC.
398 E. DANIA BEACH BLVD. #338
DANIA BEACH, FL 33004
PH: 954.399.8478 FX: 954.744.4738

REVISIONS

NO.	DESCRIPTION	BY	DATE
A	MIAMI-DADE COMMENTS	TM	2.19.14
B	MIAMI-DADE COMMENTS	MS	9.22.14
C	ALLOWED FRAME WIDTH	MS	2.11.15

HERMES F. NORIEGO, P.E.
FLORIDA P.E. NO. 73778
398 EAST DANIA BEACH BLVD. #338
DANIA BEACH, FL 33004
FBPE CERT. OF AUTHORIZATION NO. 29578

DATE: 09.24.13
DWN BY: MSS
CHK BY: HFN
SCALE: NTS

DWG #: FSD005

SHEET: 2 OF 11

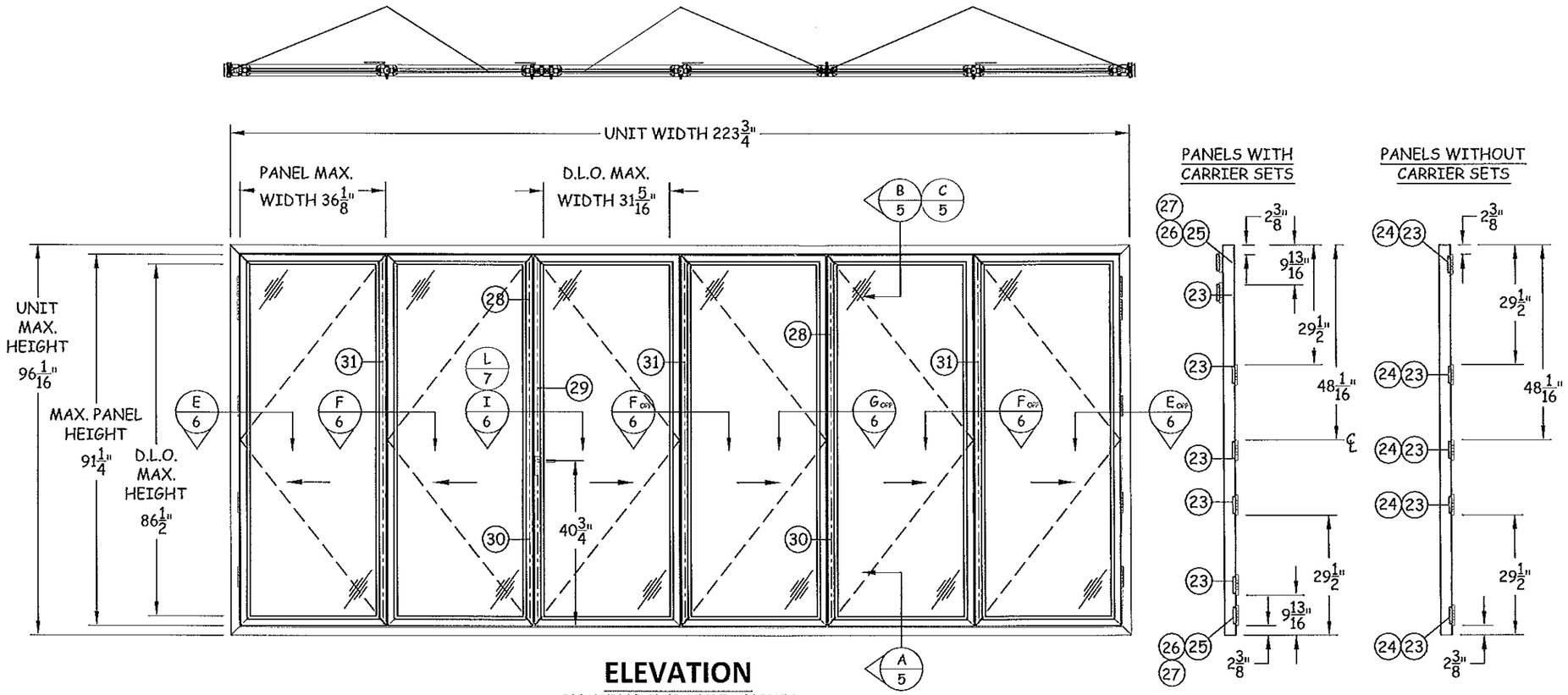

ELEVATION

INSWING 2L4R UNIT SHOWN

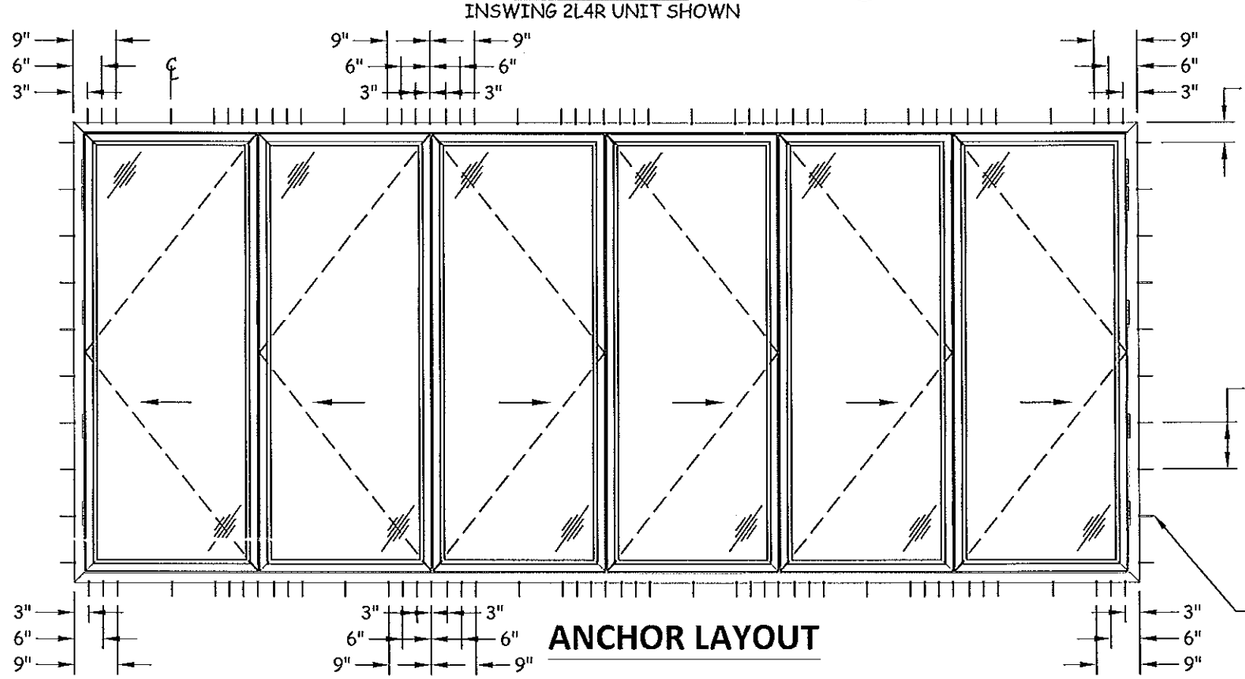

ANCHOR LAYOUT

NOTE:
1. AT JAMBS ONE (1) ADDITIONAL ANCHOR REQUIRED THROUGH EACH HINGE.
2. TESTED SIZE SHOWN. SEE SHEET 8 FOR OTHER QUALIFIED CONFIGURATIONS.
3. MAXIMUM ALLOWED FRAME WIDTH = 1.5 X 223.75" = 335.625" SUCH THAT THE MAXIMUM PANEL SIZE, AS SHOWN HEREIN, IS NOT EXCEEDED.

JAMB ANCHOR SCHEDULE	
SUBSTRATE	O.C. SPACING
WOOD	8 7/8"
CONCRETE/MASONRY	8"
STEEL STUD	5 7/8"

Approved as complying with the Fla. Bldg. Code
Date 2/19/15
NOA# 13-1029.04
Miami-Dade Product Control
By:

The Folding Sliding Door Company
Jack of one trade, master of one

THE FOLDING SLIDING DOOR COMPANY
240 SPRING VIEW COMMERCE DRIVE, BLDG1
DEBARY, FL 32713
PH: (214) 234-9112

TITLE: HD82-70 MM FOLDING INFOLDING DOOR SYSTEM ELEVATION & ANCHOR LAYOUT (2)

PREPARED BY:
BUILDING DROPS, INC.
398 E. DANIA BEACH BLVD. #338
DANIA BEACH, FL 33004
PH: 954.399.8478 FX: 954.744.4738

REVISIONS

NO.	DESCRIPTION	BY	DATE
A	MIAMI-DADE COMMENTS	TM	2.19.14
B	MIAMI-DADE COMMENTS	MS	9.22.14
C	ALLOWED FRAME WIDTH	MS	2.11.15

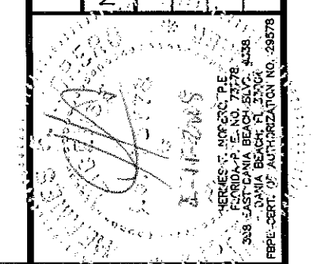

DATE: 09.24.13
DWN BY: MSS
CHK BY: HFN
SCALE: NTS

DWG #: FSD005

SHEET: 3 OF 11

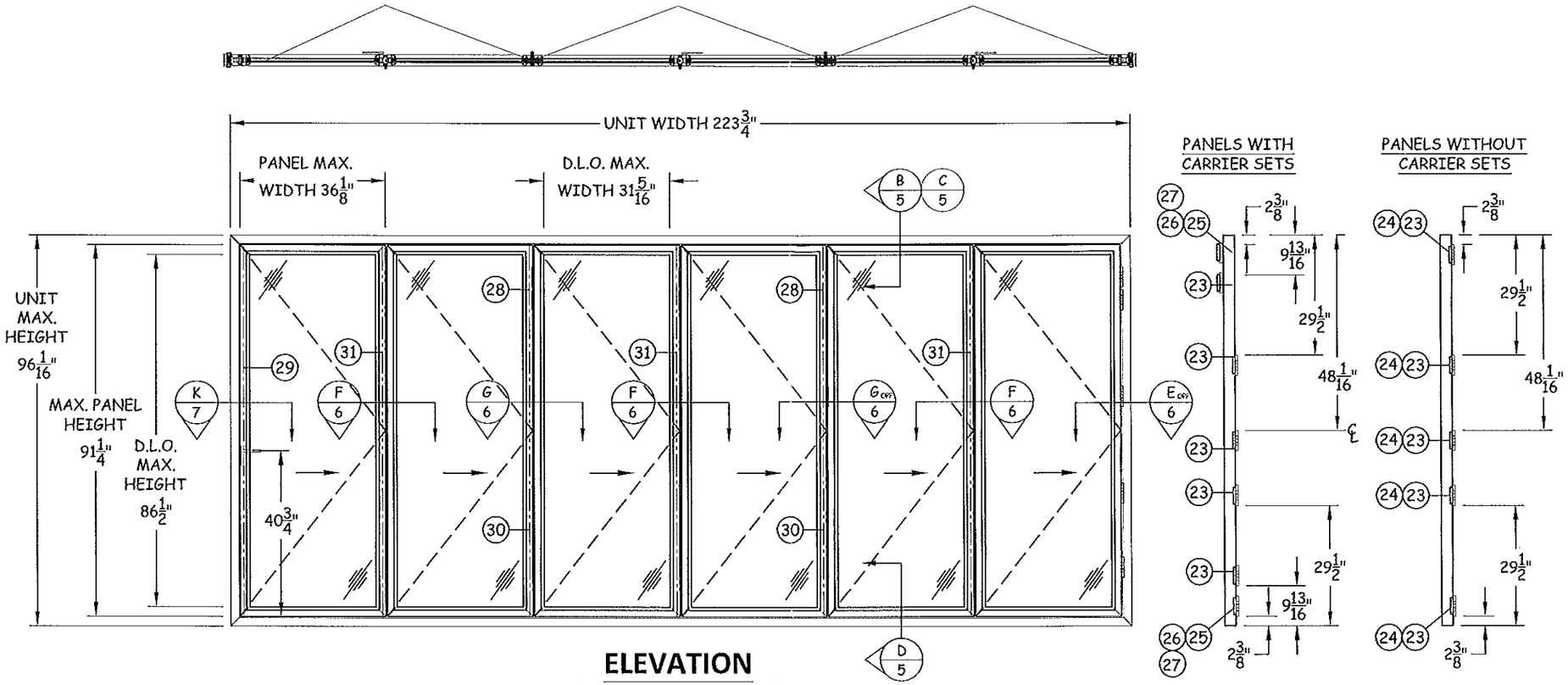

ELEVATION

INSWING 6R UNIT SHOWN

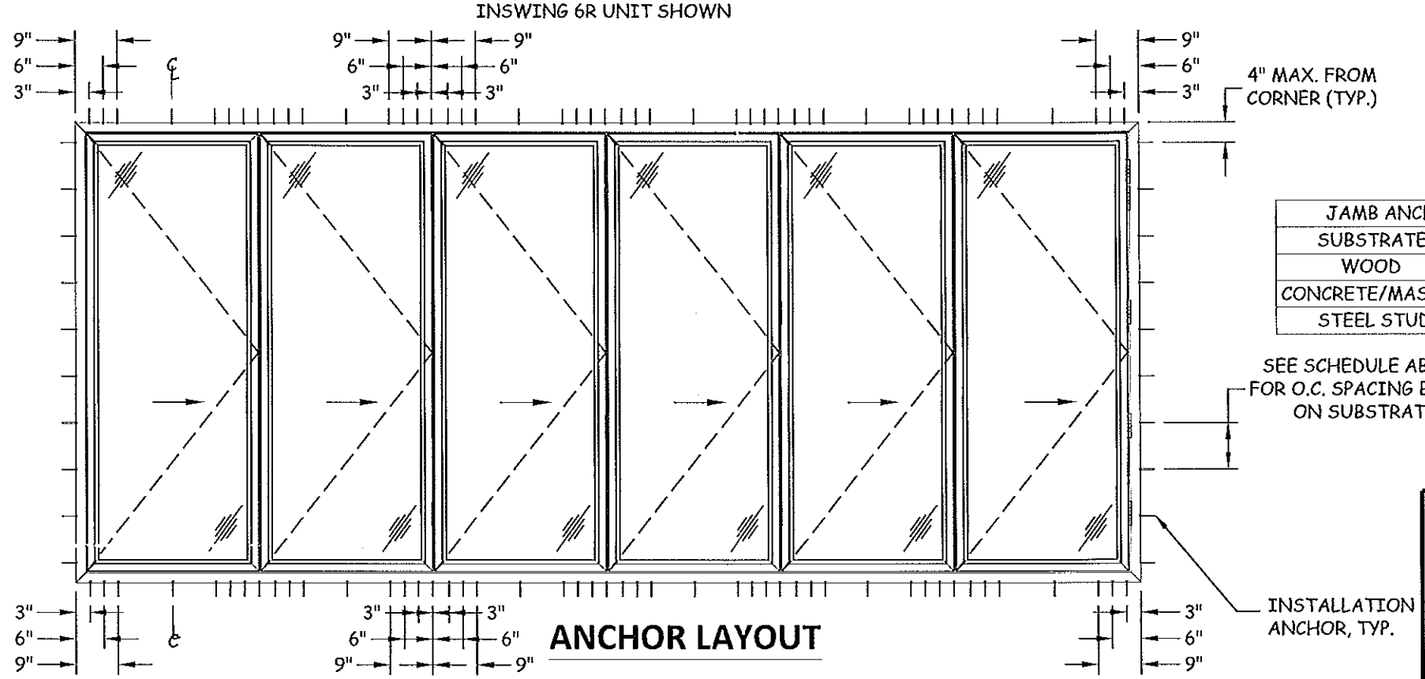

ANCHOR LAYOUT

NOTE:
1. AT JAMBS ONE (1) ADDITIONAL ANCHOR REQUIRED THROUGH EACH HINGE.
2. TESTED SIZE SHOWN. SEE SHEET 8 FOR OTHER QUALIFIED CONFIGURATIONS.
3. MAXIMUM ALLOWED FRAME WIDTH = 1.5 X 223.75" = 335.625" SUCH THAT THE MAXIMUM PANEL SIZE, AS SHOWN HEREIN, IS NOT EXCEEDED.

JAMB ANCHOR SCHEDULE	
SUBSTRATE	O.C. SPACING
WOOD	8 7/8"
CONCRETE/MASONRY	8"
STEEL STUD	5 7/8"

Approved as complying with the Florida Building Code
Date 2/19/15
NOA# 13-1028.04
Miami Dade Product Control
By: [signature]

The Folding Sliding Door Company
Jack of one trade, master of one

THE FOLDING SLIDING DOOR COMPANY
240 SPRING VIEW COMMERCE DRIVE, BLDG1
DEBARY, FL 32713
PH: (214) 234-9112

TITLE: HD82-70 MM FOLDING INFOLDING DOOR SYSTEM ELEVATION & ANCHOR LAYOUT (3)

PREPARED BY:
BUILDING DROPS, INC.
398 E. DANIA BEACH BLVD. #338
DANIA BEACH, FL 33004
PH: 954.399.8478 FX: 954.744.4738

REVISIONS

NO.	DESCRIPTION	BY	DATE
A	MIAMI-DADE COMMENTS	TM	2.19.14
B	MIAMI-DADE COMMENTS	MS	9.22.14
C	ALLOWED FRAME WIDTH	MS	2.11.15

HERMES F. NOGUERO, P.E.
FLORIDA P.E. NO. 72778
399 EAST DANIA BEACH BLVD. #338
DANIA BEACH, FL 33004
FBPE CERT. OF AUTHORIZATION NO. 29578

DATE: 09.24.13
DWN BY: MSS
CHK BY: HFN
SCALE: NTS

DWG #: FSD005

SHEET: 4 OF 11

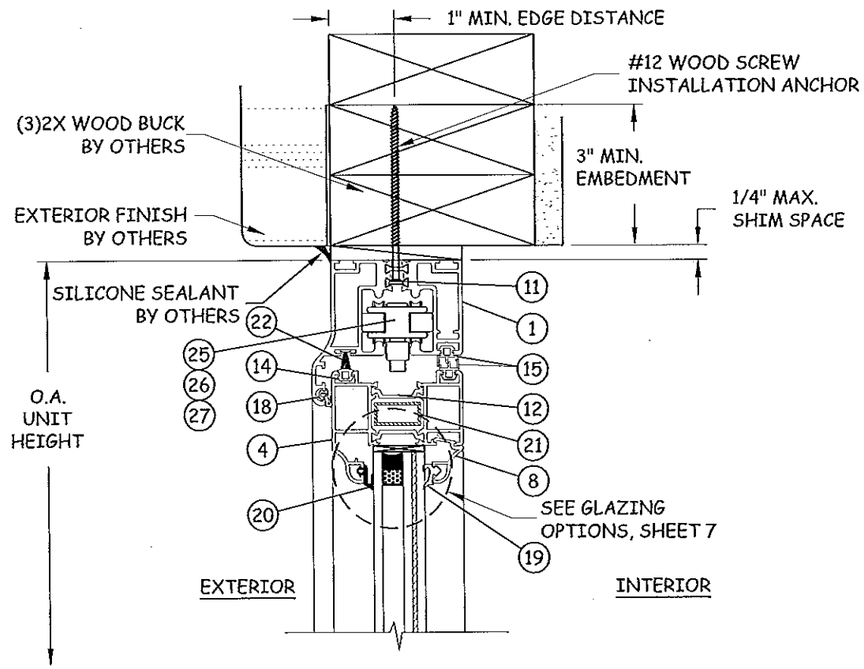

B/5 **VERTICAL SECTION**
HEAD - 2X WOOD BUCK

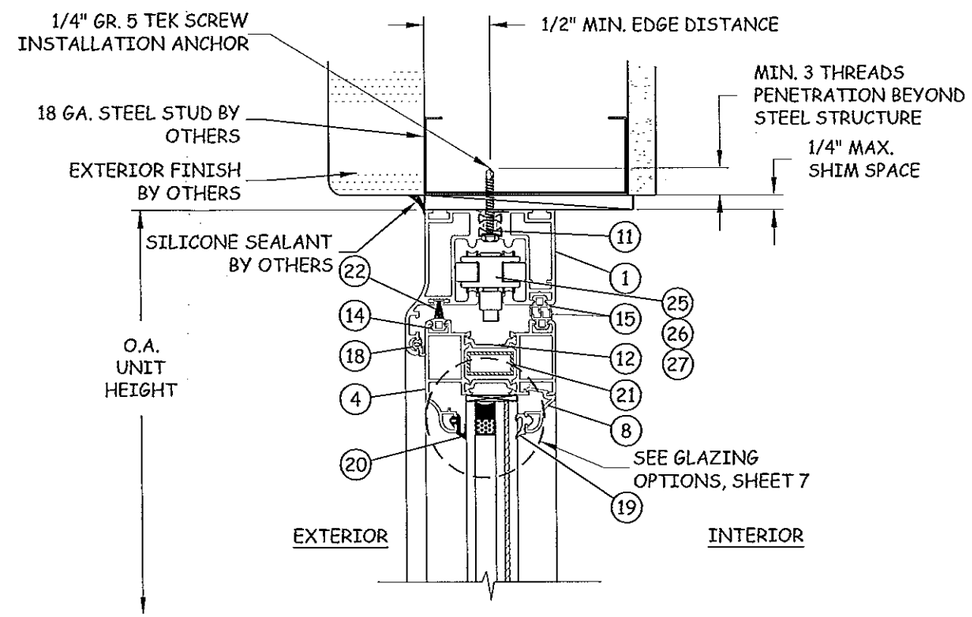

C/5 **VERTICAL SECTION**
HEAD - STEEL STUD

WOOD/MASONRY/CONCRETE SHALL BE RECESSED AND/OR ROUTED TO ACCOMMODATE FLUSH THRESHOLD PRIOR TO INSTALLATION. ALL APPLICABLE EDGE DISTANCES AND EMBEDMENTS FOR ANCHORS MUST BE MAINTAINED AS NOTED IN THIS DRAWING. SEE SHEET 11, DETAILS X/11 & Y/11 FOR RECESS THRESHOLD (SILL) PREPARATION DETAILS

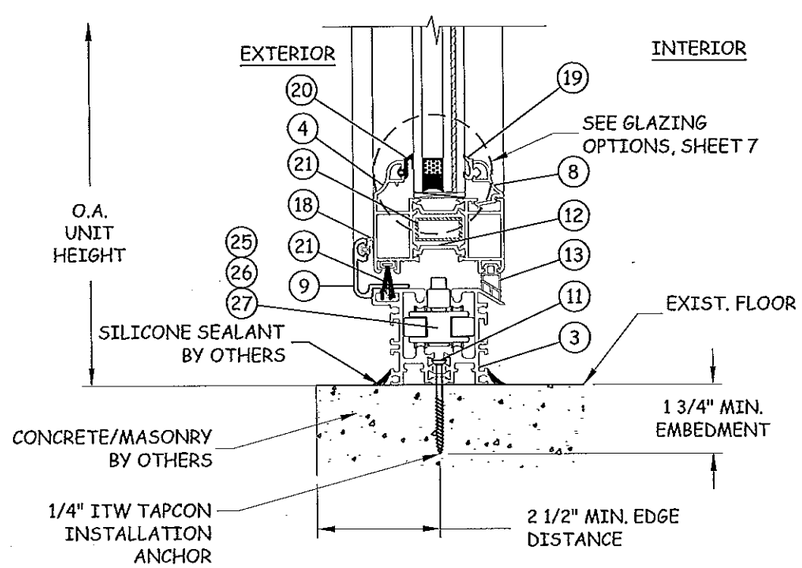

A/5 **VERTICAL SECTION**
SILL - CONCRETE/MASONRY WATER BARRIER THRESHOLD

W1: 1/4 WEEP HOLE AT 18" O.C. IN WATER BARRIER AND RECESSED THRESHOLD

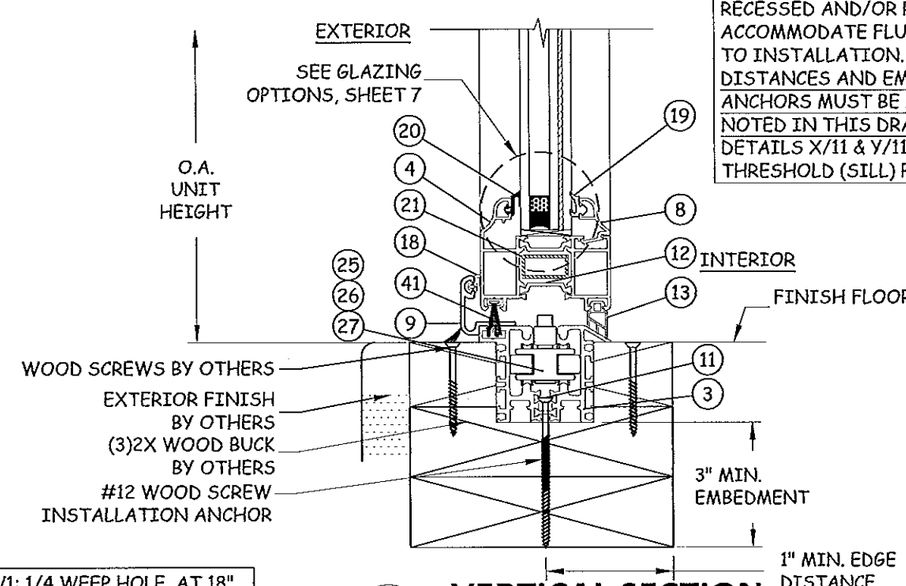

D/5 **VERTICAL SECTION**
SILL - 2X WOOD FRAME RECESSED THRESHOLD

Approved as complying with the Florida Building Code
Date 2/19/15
NOA# 13-1028.04
Miami Dade Product Control
By [signature]

The Folding Sliding Door Company
Jack of one trade, master of one

THE FOLDING SLIDING DOOR COMPANY
240 SPRING VIEW COMMERCE DRIVE, BLDG1
DEBARY, FL 32713
PH: (214) 234-9112

TITLE: HD82-70 MM FOLDING INFOLDING DOOR SYSTEM VERTICAL SECTIONS

PREPARED BY:
BUILDING DROPS, INC.
398 E. DANIA BEACH BLVD. #338
DANIA BEACH, FL 33004
PH: 954.399.8478 FX: 954.744.4738

REVISIONS

NO.	DESCRIPTION	BY	DATE
A	MIAMI-DADE COMMENTS	TM	2.19.14
B	MIAMI-DADE COMMENTS	MS	9.22.14

HERMES F. MORERO, P.E.
FLORIDA P. E. NO. 73578
398 EAST DANIA BEACH BLVD. #338
DANIA BEACH, FL 33004
FBPE CERT. OF AUTHORIZATION NO. 29578

2-11-2015

DATE: 09.24.13
DWN BY: MSS
CHK BY: HFN
SCALE: NTS

DWG #: FSD005

SHEET: 5 OF 11

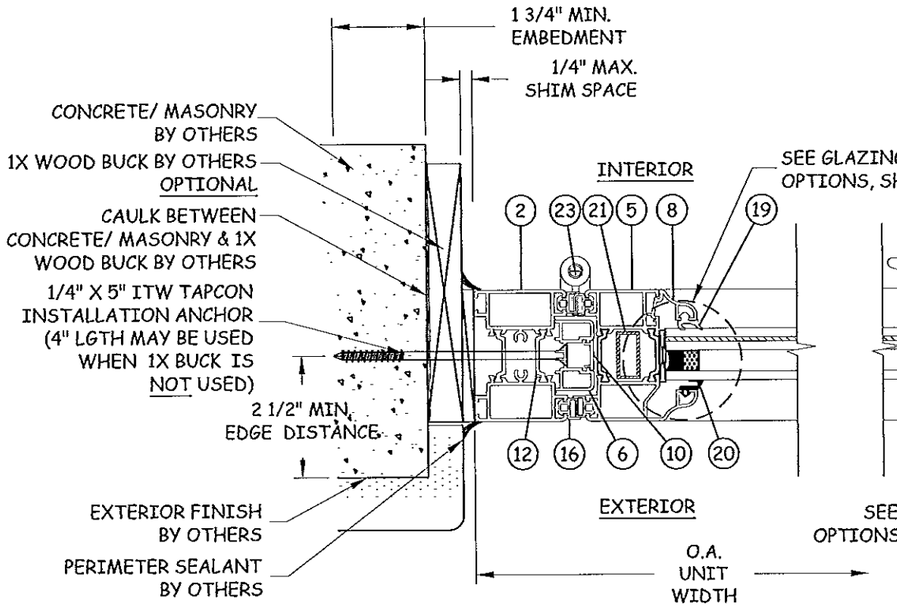

E/6 **HORIZONTAL SECTION**
JAMB - CONCRETE/MASONRY HINGE JAMB

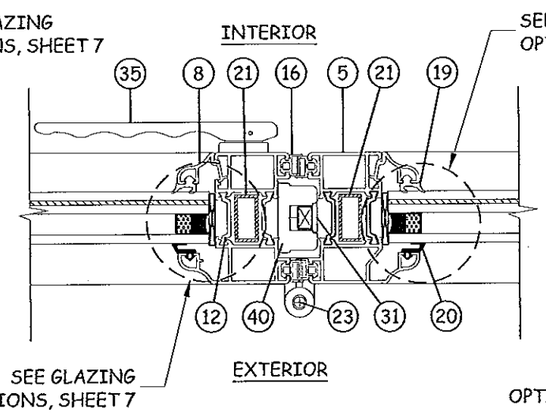

F/6 **HORIZONTAL SECTION**
ACTIVE PANEL STILE

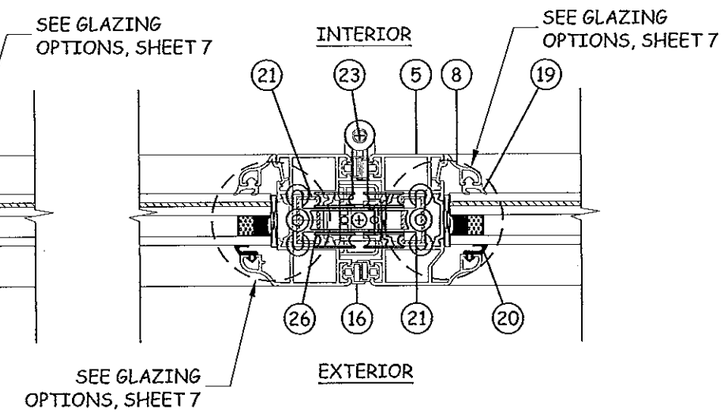

G/6 **HORIZONTAL SECTION**
INTERMEDIATE CARRIER SET

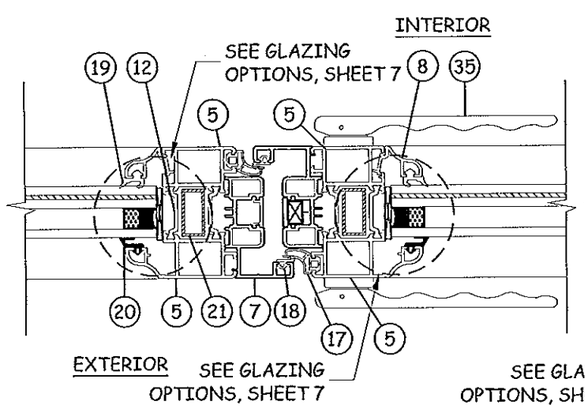

H/6 **HORIZONTAL SECTION**
ASTRAGAL

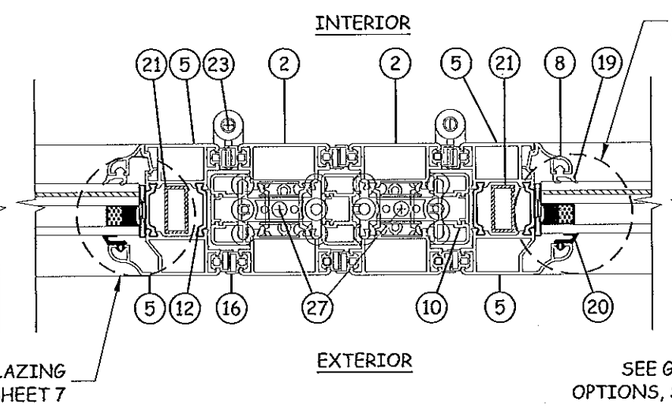

I/6 **HORIZONTAL SECTION**
INTERMEDIATE CARRIER SET MEET

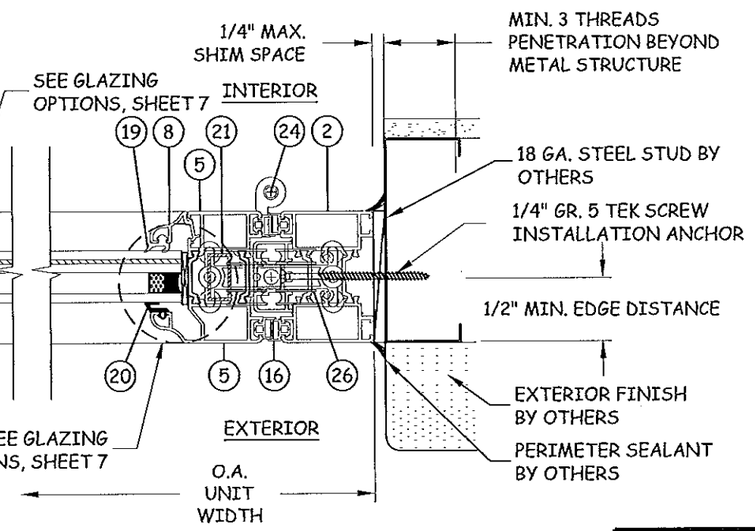

J/6 **HORIZONTAL SECTION**
JAMB - STEEL STUD END CARRIER SET

Approved as complying with the Florida Building Code
Date 2/19/15
NOA# 13-1023.04
Miami Dade Product Control
By: [signature]

The Folding Sliding Door Company
Jack of one trade, master of one

THE FOLDING SLIDING DOOR COMPANY
240 SPRING VIEW COMMERCE DRIVE, BLDG1
DEBARY, FL 32713
PH: (214) 234-9112

TITLE: HD82-70 MM FOLDING INFOLDING DOOR SYSTEM HORIZONTAL SECTIONS

PREPARED BY:
BUILDING DROPS, INC.
398 E. DANIA BEACH BLVD. #338
DANIA BEACH, FL 33004
PH: 954.399.8478 FX: 954.744.4738

REVISIONS

NO.	DESCRIPTION	BY	DATE
A	MIAMI-DADE COMMENTS	TM	2.19.14
B	MIAMI-DADE COMMENTS	MS	9.22.14

HERVICS F. NORERO, P.E.
FLORIDA P.E. NO. 73770
355 EAST DANIA BEACH BLVD. #233
DANIA BEACH, FL 33004
FBPE CERT. OF AUTHORIZATION NO. 29578

DATE: 09.24.13
DWN BY: MSS
CHK BY: HFN
SCALE: NTS

DWG #: FSD005

SHEET: 6 OF 11

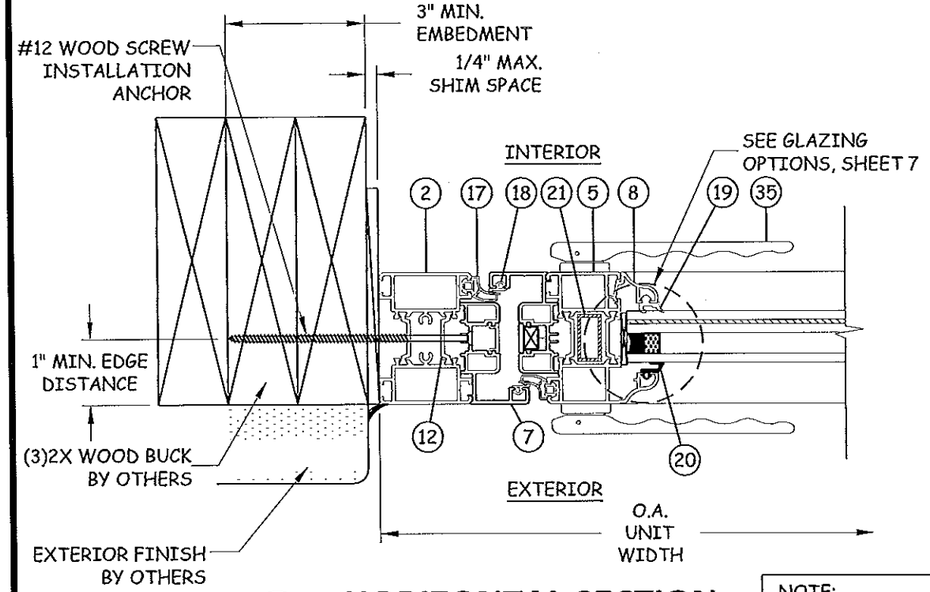

K/7 HORIZONTAL SECTION

JAMB - 2X WOOD FRAME LOCKING JAMB

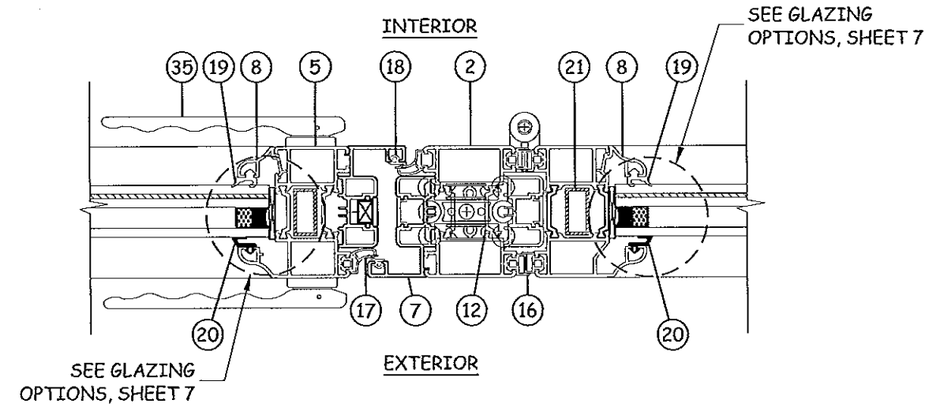

L/7 HORIZONTAL SECTION

INTERMEDIATE LOCK AT CARRIER

NOTE:
SEE SHEET 8 FOR APPLICABLE HARDWARE DETAILS AND LOCATIONS FOR EACH CONFIGURATION.

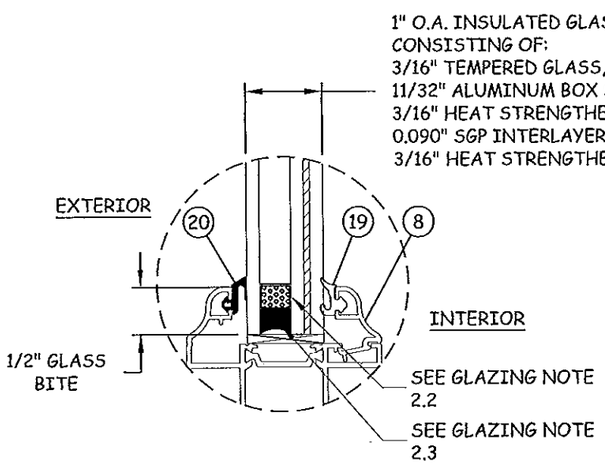

GLAZING DETAIL 1

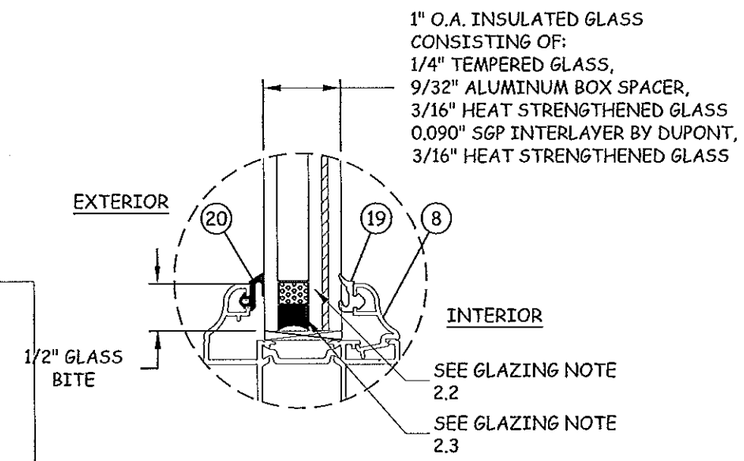

GLAZING DETAIL 2

GLAZING NOTES:

1. ALL GLAZING CONFIGURATIONS SHALL COMPLY WITH SAFETY GLAZING REQUIREMENTS OUTLINED IN 2010 FBC SECTION 2406 WITH EVIDENCE TO BE SUPPLIED TO BUILDING OFFICIAL.
2. SPACER SYSTEM
   - 2.1. ALUMINUM BOX SPACER AT PERIMETER OF GLASS.
   - 2.2. PRIMARY SEALANT IS PIB-29-BL BY ADCO
   - 2.3. SECONDARY SILICONE SEALANT IS GE3723, TWO PART
3. GLAZING GASKET ARE OF THERMOPLASTIC ELASTOMER (LMI CUSTOM MIXING COMPOUND D04080-03)
   - 3.1. 81 SHORE A HARDNESS.
   - 3.2. TENSILE STRENGTH = 2061 PSI
   - 3.3. ELONGATION = 271%
4. SPECIFIC GRAVITY = 1.18
5. GLAZING GASKETS SHALL COMPLY WITH SECTION 2411.3.4 OF THE 2010 FBC.

Approved as complying with the Florida Building Code
Date 2/13/15
NOA# 13-1028.04
Miami Dade Product Control
By

The Folding Sliding Door Company
Jack of one trade, master of one

THE FOLDING SLIDING DOOR COMPANY
240 SPRING VIEW COMMERCE DRIVE, BLDG1
DEBARY, FL 32713
PH: (214) 234-9112

TITLE: HD82-70 MM FOLDING INFOLDING DOOR SYSTEM HORIZONTAL SECTIONS & GLAZING DETAILS

PREPARED BY:
BUILDING DROPS, INC.
398 E. DANIA BEACH BLVD. #338
DANIA BEACH, FL 33004
PH: 954.399.8478 FX: 954.744.4738

REVISIONS

NO.	DESCRIPTION	BY	DATE
A	MIAMI-DADE COMMENTS	TM	2.19.14
B	MIAMI-DADE COMMENTS	MS	9.22.14
C	GASKET INFO. UPDATE	MS	02.09.15

HERMES F. NORERO, P.E.
FLORIDA P. E. NO. 73778
398 EAST DANIA BEACH BLVD., #338
DANIA BEACH, FL 33004
FBPE CERT. OF AUTHORIZATION NO. 29378

DATE: 09.24.13
DWN BY: MSS
CHK BY: HFN
SCALE: NTS

DWG #: FSD005

SHEET: 7 OF 11

ODD/ODD PANEL COUNT TYP. HARDWARE REQUIREMENTS

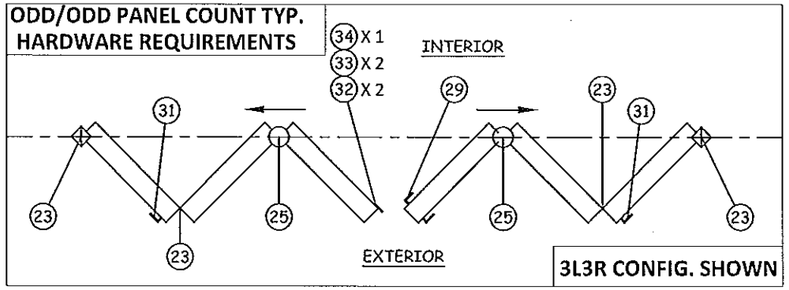

EVEN PANEL COUNT TYP. HARDWARE REQUIREMENTS

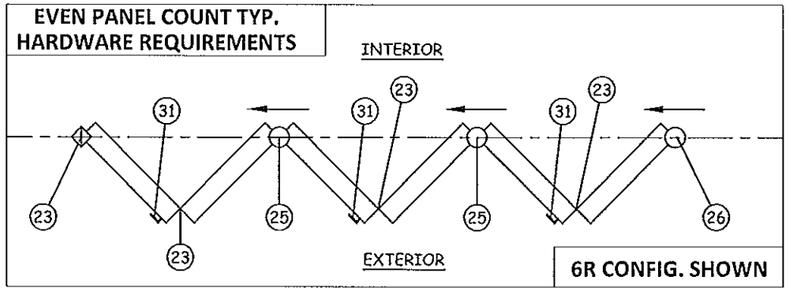

ODD/SWING PANEL COUNT TYP. HARDWARE REQUIREMENTS

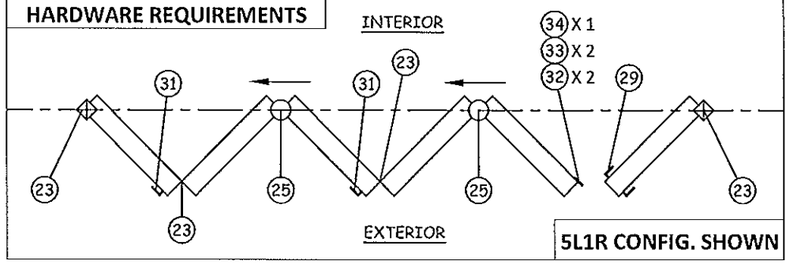

EVEN/EVEN PANEL COUNT TYP. HARDWARE REQUIREMENTS

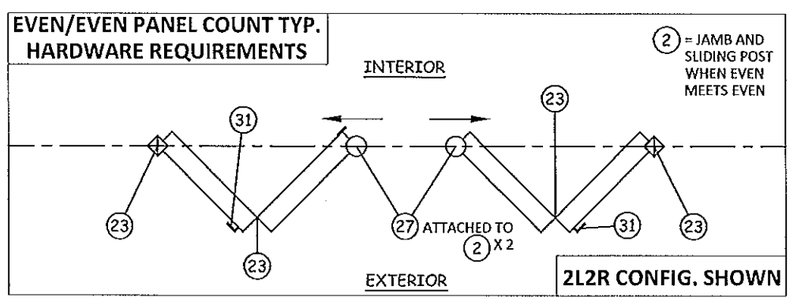

ODD/EVEN PANEL COUNT TYP. HARDWARE REQUIREMENTS

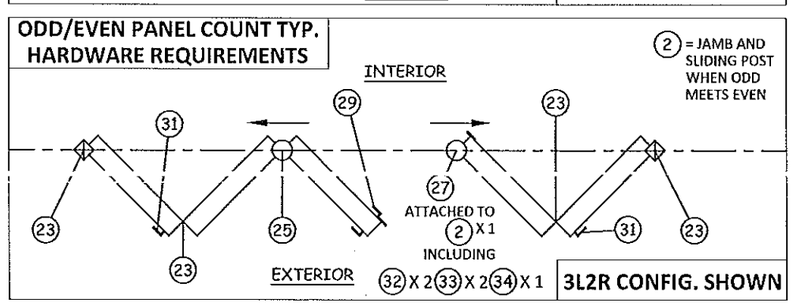

PANEL CT.	QUALIFIED CONFIGURATIONS								
1	1L	1R	-	-	-	-	-	-	-
2	1L1R	2L	2R	-	-	-	-	-	-
3	1L2R	2L1R	3L	3R	-	-	-	-	-
4	1L3R	3L1R	2L2R	4L	4R	-	-	-	-
5	1L4R	4L1R	2L3R	3L2R	5L	5R	-	-	-
6	1L5R	5R1L	2L4R	4R2L	3L3R	6L	6R	-	-
7	1L6R	6L1R	2L5R	5L2R	3L4R	4R3L	7L	7R	-
8	1L7R	7L1R	2L6R	6L2R	3L5R	5L3R	4L4R	8L	8R
9	1L8R	8L1R	2L7R	7L2R	3L6R	6R3L	4L5R	5L4R	-
10	2L8R	8L2R	3L7R	7L3R	4L6R	6L4R	5L5R	-	-
11	3L8R	8L3R	4L7R	7L4R	5L6R	6L5R	-	-	-
12	4L8R	8L4R	5L7R	7L5R	6L6R	-	-	-	-
13	5L8R	8L5R	6L7R	7L6R	-	-	-	-	-
14	6L8R	8L6R	7L7R	-	-	-	-	-	-
15	7L8R	8L7R	-	-	-	-	-	-	-
16	8L8R	-	-	-	-	-	-	-	-

NOTES:

1. MAXIMUM PANEL SIZE: 36-1/8" X 91-1/4".
2. TERMINAL PANEL HARDWARE:
   - A. 'ODD' TO 'ODD' PANEL COUNT (I.E. 3L3R CONFIG.)- REQUIRES 5-PT LOCK (ITEM 29) ON ACTIVE SWING PANEL.
   - B. 'ODD' TO 'EVEN' PANEL COUNT (I.E. 3L2R CONFIG.)- REQUIRES 5-PT LOCK (ITEM 29) ON ACTIVE SWING PANEL AND ONE END CARRIER SET (ITEM 27) ON CARRIER JOINT PANEL.
   - C. 'EVEN' TO 'EVEN' PANEL COUNT (I.E. 2L4R CONFIG.) - REQUIRES ONE END CARRIER SET (ITEM 27) ON BOTH CARRIER JOINT PANELS.
   - D. 'ODD' PANEL COUNT INTO JAMB (I.E. 5L CONFIG.) - REQUIRES 5-PT LOCK (ITEM 29) ON ACTIVE SWING PANEL
   - E. 'EVEN' PANEL INTO JAMB (I.E. 6L) - REQUIRES ONE END CARRIER SET (ITEM 26)
3. HINGED JOINT PANELS - ALL HINGED PANELS REQUIRE FIVE CENTER HINGES (ITEM 23 OR 24) AND 2-PT LOCK (ITEM 31)
4. CARRIER JOINT PANELS - ALL CARRIER PANELS REQUIRE AN INTERMEDIATE CARRIER SET (ITEM 25), AND FIVE HINGES (ITEM 23)

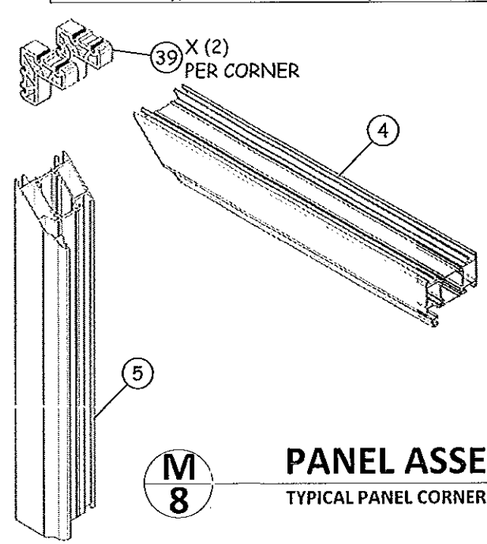

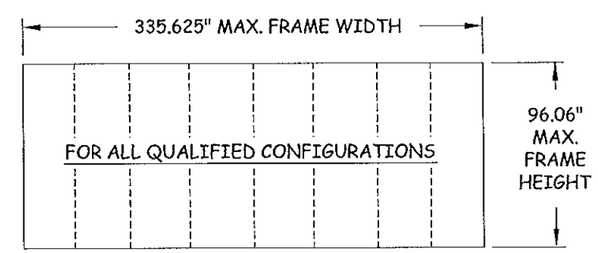

NOTE: FRAME CORNER ASSEMBLY IS SIMILAR USING (2) FRAME CORNER KEYS(38)

M 8

PANEL ASSEMBLY

TYPICAL PANEL CORNER ASSEMBLY

Approved for compliance with Florida Building Code
Date 3/19/15
NOA# 12-1028.06
Miami Dade Product Control
By:

The Folding Sliding Door Company
Jack of one trade, master of one

THE FOLDING SLIDING DOOR COMPANY
240 SPRING VIEW COMMERCE DRIVE, BLDG1
DEBARY, FL 32713
PH: (214) 234-9112

TITLE: HD82-70 MM FOLDING INFOLDING DOOR SYSTEM HARDWARE REQUIREMENTS & CONFIGURATIONS

PREPARED BY:
BUILDING DROPS, INC.
398 E. DANIA BEACH BLVD. #338
DANIA BEACH, FL 33004
PH: 954.399.8478 FX: 954.744.4738

REVISIONS

NO.	DESCRIPTION	BY	DATE
A	MIAMI-DADE COMMENTS	TM	2.19.14
B	MIAMI-DADE COMMENTS	MS	9.22.14

HOMAS F. HOWARD, P.E.
FLORIDA LICENSE NO. 47766
398 EAST DANIA BEACH BLVD. #338
DANIA BEACH, FL 33004
FBPE CERT. OF AUTHORIZATION NO. 29578

7-11-2015

DATE: 09.24.13
DWN BY: MSS
CHK BY: HFN
SCALE: NTS

DWG #: FSD005

BILL OF MATERIALS

ITEM NO.	DESCRIPTION	PART NO.	MATERIAL	MANUFACTURER
1	FRAME HEAD (WITH ITEM 11)	8202	AL. 6063-T5	FSD CO.
2	FRAME JAMB/STILE (WITH ITEM 12)	8203	AL. 6063-T5	FSD CO.
3	FRAME THRESHOLD (WITH ITEM 11)	8001	AL. 6063-T5	FSD CO.
4	PANEL RAIL (WITH ITEM 12)	8201	AL. 6063-T5	FSD CO.
5	PANEL STILE (WITH ITEM 12)	8201	AL. 6063-T5	FSD CO.
6	ACTIVE STILE ADAPTOR	8211	AL. 6063-T5	FSD CO.
7	ASTRAGAL ADAPTOR	8210	AL. 6063-T5	FSD CO.
8	GLAZING BEAD	8208	AL. 6063-T5	FSD CO.
9	THRESHOLD ADAPTOR	7003	AL. 6063-T5	FSD CO.
10	DUST COVER	G1194	PLASTIC	FSD CO.
11	SMALL THERMAL STRUT	---	POLYAMIDE	TECHNOFORM
12	LARGE THERMAL STRUT	---	POLYAMIDE	TECHNOFORM
13	BOTTOM RAIL GASKET	HD82BPG	EPDM	PERFORMANCE ELASTOMER
14	TOP RAIL GASKET	FSDBTG	EPDM	PERFORMANCE ELASTOMER
15	HEAD GASKET	HD82TPG	EPDM	PERFORMANCE ELASTOMER
16	STILE GASKET	HD82PGW	EPDM	PERFORMANCE ELASTOMER
17	ASTRAGAL SEAL	HD82FG	EPDM	PERFORMANCE ELASTOMER
18	COMPRESSION SEAL	F135	EPDM	PERFORMANCE ELASTOMER
19	INT. GLAZING GASKET	E732	EPDM	PERFORMANCE ELASTOMER
20	EXT. GLAZING GASKET	E732	EPDM	PERFORMANCE ELASTOMER
21	REINFORCEMENT (STILES)	---	AL. 6063-T5	FSD CO.
22	TOP PILE	FS75BS	NYLON BRUSH	FSD CO.
23	CENTER HINGE	FSH5	AL. 6063-T5	FSD CO.
24	OFFSET HINGE	FSHH	AL. 6063-T5	FSD CO.
25	INT. CARRIER SET	FS70RAHD	AL. 6063-T5	FSD CO.
26	END CARRIER SET	FS70RAHHD	ALUM./S.S.	FSD CO.
27	SNGLE CARRIER SET	FS70PRSW	ALUM./S.S.	FSD CO.
28	INTERNAL SHOOT BOLT (TOP)	FSRAB250	S.S./ZINC	FSD CO.
29	5-PT LATCH W/ DEADBOLT	FS5PL	STEEL	GU
30	INTERNAL SHOOT BOLT (BOTTOM)	FSNASB250	STEEL	FSD CO.
31	BI-FOLD 2-PT LOCK	FS2PL	STEEL	GU
32	FINGERBOLT	FSSB2/4/600	STEEL	FSD CO.
33	HOOK KEEP	FSHK	STEEL	GU
34	CENTER KEEP	FSCKL/R	STEEL	GU

1 FRAME HEAD ALUMINUM 6063-T5

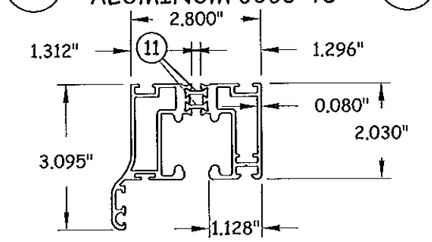

2 FRAME JAMB/STILE ALUMINUM 6063-T5

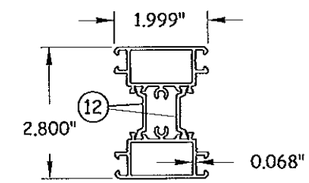

3 FRAME THRESHOLD ALUMINUM 6063-T5

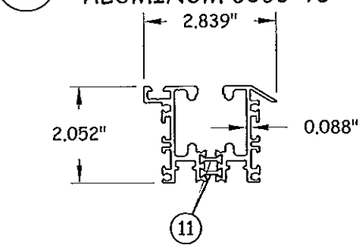

4 PANEL RAIL ALUMINUM 6063-T5

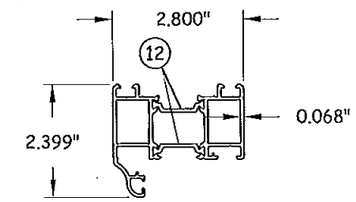

5 PANEL STILE ALUMINUM 6063-T5

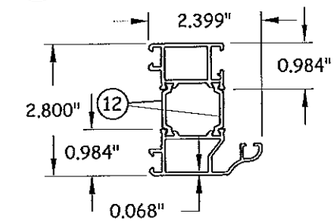

6 ACTIVE STILE ADAPTOR ALUMINUM 6063-T5

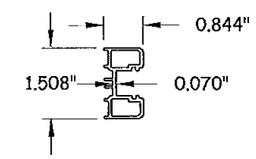

7 ASTRAGAL ADAPTOR ALUMINUM 6063-T5

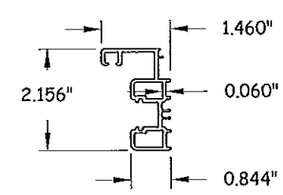

8 GLAZING BEAD ALUMINUM 6063-T5

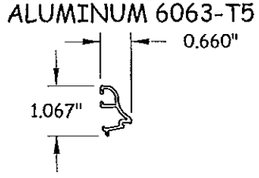

NOTE: ITEMS #23 THROUGH #27 AND ITEMS #35 THROUGH #37, MAY BE CONSTRUCTED ALTERNATIVELY, FROM GRADE 316 STAINLESS STEEL.

Approved as complying with Al
Flo.Ada Building Code
Date 2/19/15
NOA# 13-1029.04
Miami Dade Product Control
By Sheng L. Chang

The Folding Sliding Door Company
Jack of one trade, master of one

THE FOLDING SLIDING DOOR COMPANY
240 SPRING VIEW COMMERCE DRIVE,
BLDG1
DEBARY, FL 32713
PH: (214) 234-9112

TITLE: HD82-70 MM FOLDING INFOLDING DOOR SYSTEM COMPONENTS & BILL OF MATERIALS (1)

PREPARED BY:
3 BUILDING DROPS, INC.
398 E. DANIA BEACH BLVD. #338
DANIA BEACH, FL 33004
PH: 954.399.8478 FX: 954.744.4738

REVISIONS

NO.	DESCRIPTION	BY	DATE
A	MIAMI-DADE COMMENTS	TM	2.19.14
B	MIAMI-DADE COMMENTS	MS	9.22.14
C	GASKET INFO. UPDATE	MS	2.09.15

HERMES F. NOPERO, P.E.
FLORIDA P. E. NO. 73773
390 EAST DANIA BEACH BLVD. #308
DANIA BEACH, FLORIDA 33004
FBPE CERT. OF AUTHORIZATION NO. 29578

DATE: 09.24.13
DWN BY: MSS
CHK BY: HFN
SCALE: NTS
DWG #: FSD005
SHEET: 9 OF 11

BILL OF MATERIALS

ITEM NO.	DESCRIPTION	PART NO.	MATERIAL	MANUFACTURER
35	LEVER HANDLE	FSLL	ALUMINUM	FSD CO.
36	HALF CYLINDER	FSHC	BRASS/STEEL	FSD CO.
37	FULL CYLINDER	FSFC	BRASS/STEEL	FSD CO.
38	FRAME CORNER KEY	---	ALUMINUM	FSD CO.
39	PANEL CORNER KEY	---	ALUMINUM	FSD CO.
40	SOLID TONGUE	8211S	ALUMINUM	FSD CO.
41	BOTTOM PILE	FS75BS	NYLON BRUSH	FSD CO.

9 THRESHOLD ADAPTOR
ALUMINUM 6063-T5

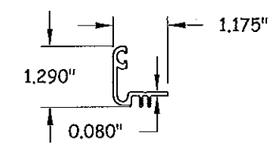

10 DUST COVER
ALUMINUM 6063-T5

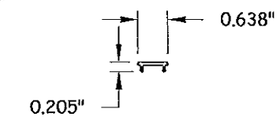

11 SMALL THERMAL STRUT
POLYAMIDE

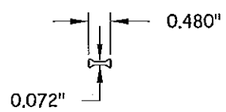

12 LARGE THERMAL STRUT
POLYAMIDE

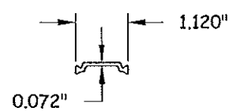

13 BOTTOM RAIL GASKET
EPDM

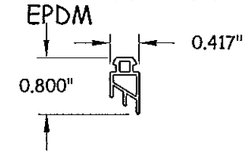

14 TOP RAIL GASKET
EPDM

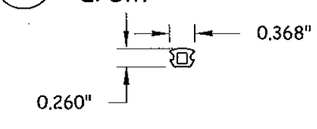

15 HEAD GASKET
EPDM

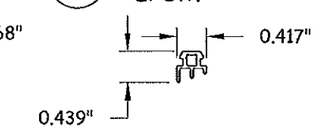

16 STILE GASKET
EPDM

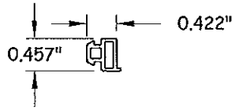

17 ASTRAGAL SEAL
EPDM

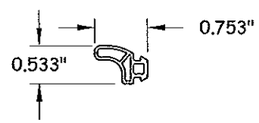

18 COMPRESSION SEAL
EPDM

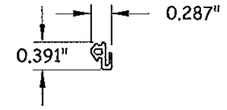

19 INTERIOR GLAZING GASKET
EPDM

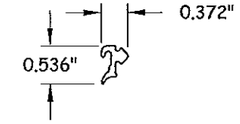

20 EXTERIOR GLAZING GASKET
EPDM

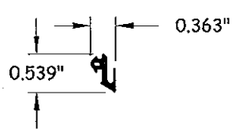

21 REINFORCEMENT
ALUMINUM 6063-T5

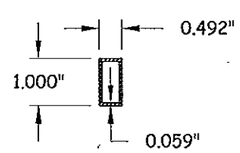

22 TOP PILE
POLYETHYLENE

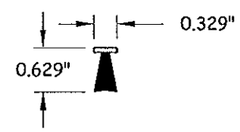

23 CENTER HINGE
ALUMINUM 6063-T5

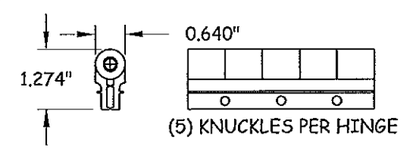

24 OFFSET HINGE
ALUMINUM 6063-T5

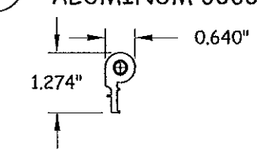

25 INTERMEDIATE CARRIER SET
ALUMINUM 6063-T5

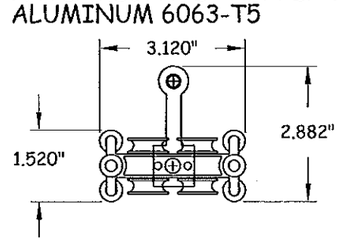

26 END CARRIER SET
ALUMINUM 6063-T5

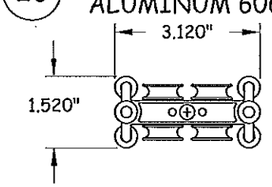

27 SINGLE CARRIER SET
ALUMINUM 6063-T5

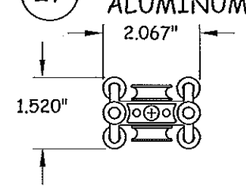

40 SOLID TONGUE
ALUMINUM 6063-T5

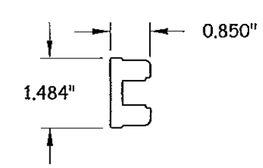

41 BOTTOM PILE
POLYETHYLENE

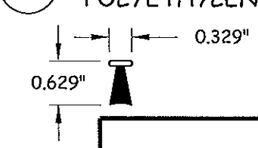

Approved as complying with the
Florida Building Code
Date 2/19/15
NOA# 13-1028.04
Miami Dade Product Control
By Sheng L. Chang

The Folding Sliding Door Company
Jack of one trade, master of one

THE FOLDING SLIDING DOOR COMPANY
240 SPRING VIEW COMMERCE DRIVE, BLDG1
DEBARY, FL 32713
PH: (214) 234-9112

TITLE: HD82-70 MM FOLDING INFOLDING DOOR SYSTEM COMPONENTS & BILL OF MATERIALS (2)

PREPARED BY:
BUILDING DROPS, INC.
398 E. DANIA BEACH BLVD. #338
DANIA BEACH, FL 33004
PH: 954.399.8478 FX: 954.744.4738

REVISIONS

NO.	DESCRIPTION	BY	DATE
A	MIAMI-DADE COMMENTS	TM	2.19.14
B	MIAMI-DADE COMMENTS	MS	9.22.14

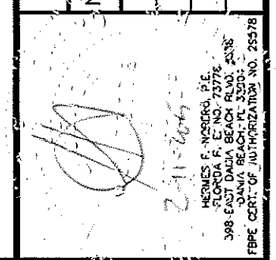

DATE: 09.24.13
DWN BY: MSS
CHK BY: HFN
SCALE: NTS

DWG #: FSD005

SHEET: 10 OF 11

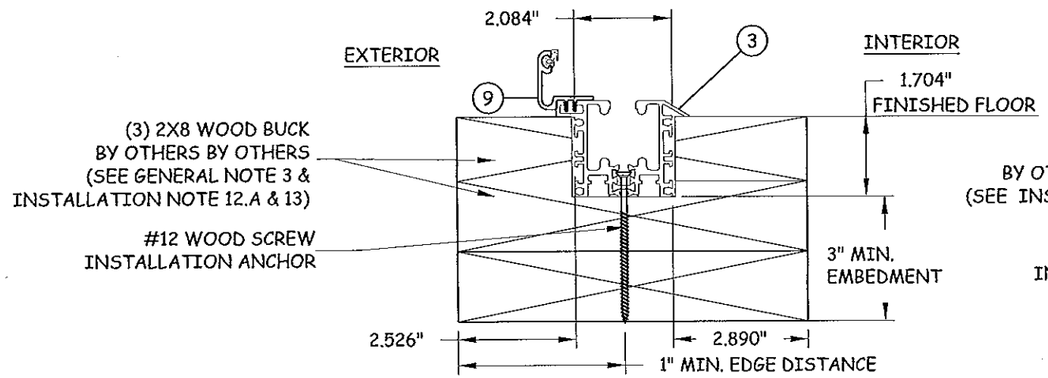

X/11 RECESSED THRESHOLD (SILL)

2X8 WOOD BUCK INSTALLATION PREPARATION

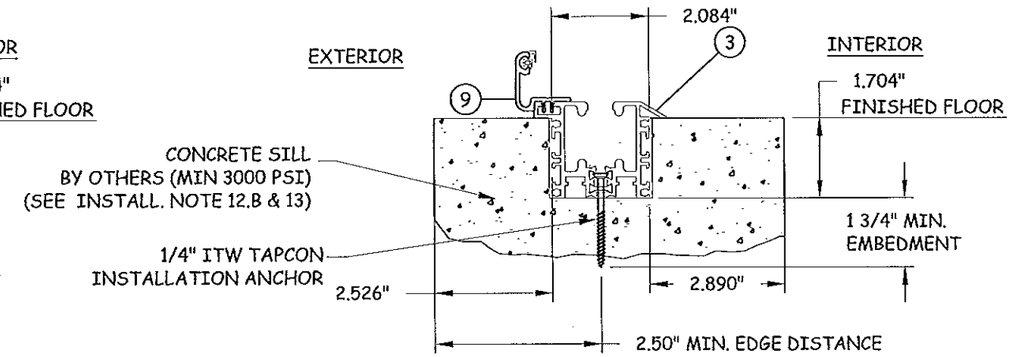

Y/11 FLUSH RECESSED THRESHOLD (SILL)

CONCRETE INSTALLATION PREPARATION

WOOD & CONC. SUBSTRATES SHOWN MUST BE RECESSED AND/OR ROUTED TO ACCOMMODATE THESE COMPONENTS PRIOR TO INSTALLATION. ALL EDGE DISTANCES AND EMBEDMENTS FOR ANCHORS MUST BE MAINTAINED AS NOTED IN THIS SHEET.

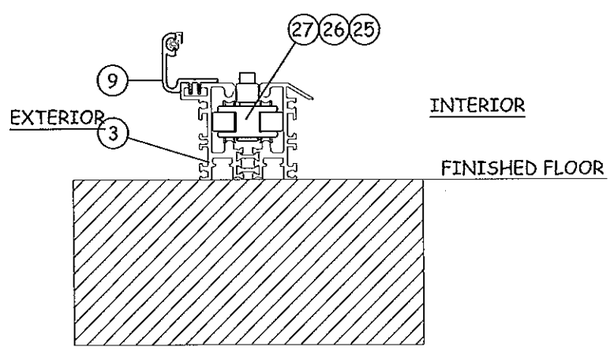

WATER BARRIER THRESHOLD

(SEE INSTALLATION DETAIL A/5)

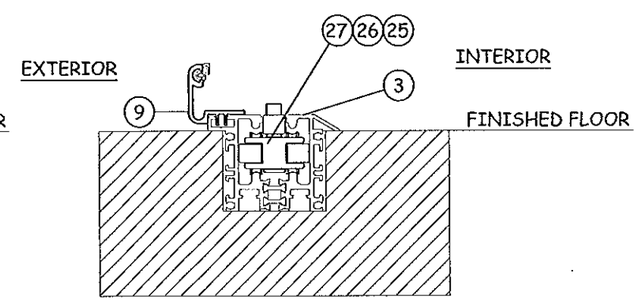

FLUSH RECESS THRESHOLD (SILL)

(SEE INSTALLATION DETAILS X/11 & Y/11 ABOVE)

Approved as complying with the Florida Building Code
Date 2/19/15
NOA# 13-1028.04
Miami Dade Product Control
By

The Folding Sliding Door Company
Jack of one trade, master of one

THE FOLDING SLIDING DOOR COMPANY
240 SPRING VIEW COMMERCE DRIVE, BLDG1
DEBARY, FL 32713
PH: (214) 234-9112

TITLE: HD82-70 MM FOLDING INFOLDING DOOR SYSTEM INSTALLATION PREPARATION DETAILS

PREPARED BY:
BUILDING DROPS, INC.
398 E. DANIA BEACH BLVD. #338
DANIA BEACH, FL 33004
PH: 954.399.8478 FX: 954.744.4738

REVISIONS

NO.	DESCRIPTION	BY	DATE
A	MIAMI-DADE COMMENTS	TM	2.19.14
B	MIAMI-DADE COMMENTS	MS	9.22.14

HERMES F. NUNEZ, P.E.
FLORIDA P. E. NO. 73578
398 EAST DANIA BEACH BLVD. #338
DANIA BEACH, FL 33004
FBPE CERT. OF AUTHORIZATION NO. 29578

DATE: 09.24.13
DWN BY: MSS
CHK BY: HFN
SCALE: NTS

DWG #: FSD005