MIAMI-DADE COUNTY
DEPARTMENT OF REGULATORY AND ECONOMIC RESOURCES (RER)
BOARD AND CODE ADMINISTRATION DIVISION

MIAMI–DADE COUNTY, FLORIDA
PRODUCT CONTROL SECTION
11805 SW 26 Street, Room 208
T (786) 315–2590 F (786) 315–2599
www.miamidade.gov/economy

NOTICE OF ACCEPTANCE (NOA)

Historical Arts & Casting, Inc.
5580 West Bagley Park Road
West Jordan, UT 84081–5697

SCOPE:

This NOA is being issued under the applicable rules and regulations governing the use of construction materials. The documentation submitted has been reviewed and accepted by Miami–Dade County RER–Product Control Section to be used in Miami–Dade County and other areas where allowed by the Authority Having Jurisdiction (AHJ).

This NOA shall not be valid after the expiration date stated below. The Miami–Dade County Product Control Section (In Miami–Dade County) and/ or the AHJ (in areas other than Miami–Dade County) reserve the right to have this product or material tested for quality assurance purposes. If this product or material fails to perform in the accepted manner, the manufacturer will incur the expense of such testing and the AHJ may immediately revoke, modify, or suspend the use of such product or material within their jurisdiction. RER reserves the right to revoke this acceptance, if it is determined by Miami–Dade County Product Control Section that this product or material fails to meet the requirements of the applicable building code.

This product is approved as described herein, and has been designed to comply with the Florida Building Code, including the High Velocity Hurricane Zone.

DESCRIPTION: Series "Palmetto" Bronze Outswing French Door – L.M.I.

APPROVAL DOCUMENT: Drawing No. **NONE**, titled "Palmetto Series Bronze Doors", sheets 01 through 15 of 15, dated 02/14/14 with the latest revision, prepared by manufacture, dated 06/04/14, signed and sealed by Scott Wolters, P. E., bearing the Miami–Dade County Product Control Section Approval stamp with the Notice of Acceptance number and Approval date by the Miami–Dade County Product Control Section.

MISSILE IMPACT RATING: Large and Small Missile Impact Resistant

LABELING: Each unit shall bear a permanent label with the manufacturer's name or logo, city, state, series, and following statement: "Miami–Dade County Product Control Approved", unless otherwise noted herein.

RENEWAL of this NOA shall be considered after a renewal application has been filed and there has been no change in the applicable building code negatively affecting the performance of this product.

TERMINATION of this NOA will occur after the expiration date or if there has been a revision or change in the materials, use, and/ or manufacture of the product or process. Misuse of this NOA as an endorsement of any product, for sales, advertising or any other purposes shall automatically terminate this NOA. Failure to comply with any section of this NOA shall be cause for termination and removal of NOA.

ADVERTISEMENT: The NOA number preceded by the words Miami–Dade County, Florida, and followed by the expiration date may be displayed in advertising literature. If any portion of the NOA is displayed, then it shall be done in its entirety.

INSPECTION: A copy of this entire NOA shall be provided to the user by the manufacturer or its distributors and shall be available for inspection at the job site at the request of the Building Official.

This NOA consists of this page 1 and evidence pages E–1 and E–2, as well as approval document mentioned above.

The submitted documentation was reviewed by **Jaime D. Gascon, P. E.**

MIAMI-DADE COUNTY APPROVED

J. Gascon
7/8/14

Historical Arts & Casting, Inc.

NOTICE OF ACCEPTANCE: EVIDENCE SUBMITTED

A. DRAWINGS

1. Manufacturer's die drawings and sections.
2. Drawing No. **NONE**, titled "Palmetto Series Bronze Doors", sheets 01 through 15 of 15, dated 02/14/14 with the latest revision, prepared by manufacture, dated 06/04/14, signed and sealed by Scott Wolters, P. E.

B. TESTS

1. Test reports on: 1) Air Infiltration Test, per FBC, TAS 202–94
   2) Uniform Static Air Pressure Test, Loading per FBC, TAS 202–94
   3) Water Resistance Test, per FBC, TAS 202–94
   4) Large Missile Impact Test per FBC, TAS 201–94
   5) Cyclic Wind Pressure Loading per FBC, TAS 203–94
   6) Forced Entry Test, per AAMA 1304–02 and per FBC 2411.3.2.1, and TAS 202–94

   along with marked–up drawings and installation diagram of an outswing French doors, prepared by Architectural Testing, Inc., revised Test Report No. **ATI–B3805.01–450–18R01**, dated 03/28/14, signed and sealed by Vinu J. Abraham, P. E.
2. Test reports on: 1) Air Infiltration Test, per FBC, TAS 202–94
   2) Uniform Static Air Pressure Test, Loading per FBC, TAS 202–94
   3) Water Resistance Test, per FBC, TAS 202–94
   4) Large Missile Impact Test per FBC, TAS 201–94
   5) Cyclic Wind Pressure Loading per FBC, TAS 203–94
   6) Forced Entry Test, per AAMA 1304–02 and per FBC 2411.3.2.1, and TAS 202–94

   along with marked–up drawings and installation diagram of an outswing French doors, prepared by Architectural Testing, Inc., Test Report No. **ATI–B3804.01–450–18**, dated 11/15/12, signed and sealed by Vinu J. Abraham, P. E.
3. Test reports on: 1) Air Infiltration Test, per FBC, TAS 202–94
   2) Uniform Static Air Pressure Test, Loading per FBC, TAS 202–94
   3) Water Resistance Test, per FBC, TAS 202–94
   4) Large Missile Impact Test per FBC, TAS 201–94
   5) Cyclic Wind Pressure Loading per FBC, TAS 203–94
   6) Forced Entry Test, per AAMA 1304–02 and per FBC 2411.3.2.1, and TAS 202–94

   along with marked–up drawings and installation diagram of an outswing French doors, Specimens No.'s 1, 2, 4, 5 and 7, prepared by Hurricane Test Laboratory, Inc., Test Reports No.'s **HTL–0222–0521–001**, dated 12/27/01, signed and sealed by Vinu J. Abraham, P. E.

Jaime D. Gascon, P. E.
Product Control Section Supervisor
NOA No. 13–1028.10
Expiration Date: July 17, 2019
Approval Date: July 17, 2014

NOTICE OF ACCEPTANCE: EVIDENCE SUBMITTED

C. CALCULATIONS

1. Anchor verification calculations and structural analysis, complying with **FBC 5th Edition (2014)**, dated 02/21/14, prepared by Wolters Engineering, Inc., dated 04/21/14, signed and sealed by Scott Wolters, P. E.
2. **Glazing complies with ASTM E–1300–04/ 09**

D. QUALITY ASSURANCE

1. Miami–Dade Department of Regulatory and Economic Resources (RER).

E. MATERIAL CERTIFICATIONS

1. Notice of Acceptance No. **12–1231.08** issued to **Eastman Chemical Company (MA)** for their "**Saflex CP – Saflex and Saflex HP Composite Glass Interlayers with PET Core**" dated 03/28/13, expiring on 12/11/18.
2. Notice of Acceptance No. **13-1105.10** issued to **SAF-GLAS, LLC** for their "**SAF–GLAS Polycarbonate Glass Interlayer**", dated 12/19/13, expiring on 12/16/17.

F. STATEMENTS

1. Statement letter of conformance, complying with **FBC 5th Edition (2014)**, issued by Wolters Engineering, Inc., dated 06/04/14, signed and sealed by Scott Wolters, P. E.
2. Statement letter of no financial interest, issued by Wolters Engineering, Inc., dated 02/21/14, signed and sealed by Scott Wolters, P. E.
3. Laboratory compliance letter for revised Test Report No. **ATI–B3805.01–450–18R01**, issued by Architectural Testing, Inc., dated 03/28/14, signed and sealed by Vinu J. Abraham, P.E.
4. Laboratory compliance letter for Test Report No. **ATI–B3804.01–450–18**, issued by Architectural Testing, Inc., dated 11/15/12, signed and sealed by Vinu J. Abraham, P. E.
5. Laboratory compliance letter for Test Report No. **HTL–0222–0521–001**, issued by Hurricane Test Laboratory, LLC, dated 12/27/01, signed and sealed by Vinu J. Abraham, P.E.
6. Department of State Certification of **HURRICANE MANUFACTURING CORPORATION, INC.** as a for profit corporation, active and organized under the laws of the State of Florida, dated 12/09/11 and signed by Kurt S. Browning, Secretary of State.

G. OTHERS

1. None.

Jaime D. Gascon, P. E.
Product Control Section Supervisor
NOA No. 13–1028.10
Expiration Date: July 17, 2019
Approval Date: July 17, 2014

PALMETTO SERIES BRONZE DOORS

GENERAL NOTES:
1. THIS APPROVAL APPLIES TO PALMETTO SERIES IMPACT RESISTANT DOORS WHEN CONSTRUCTED AND INSTALLED AS DESCRIBED HEREIN.
2. APPROVED CONFIGURATIONS ARE SHOWN BELOW.
3. ALLOWABLE DESIGN PRESSURES: +/−70 PSF
4. THESE DOORS HAVE BEEN DESIGNED AND TESTED TO TAS 201, 202, AND 203 PROTOCOLS IN ACCORDANCE WITH THE REQUIREMENTS OF THE FLORIDA BUILDING CODE 5TH EDITION (2014), INCLUDING THE HIGH VELOCITY HURRICANE ZONE PROVISIONS.
5. THESE DOORS ARE LARGE AND SMALL MISSILE IMPACT RATED, SHUTTERS ARE NOT REQUIRED.
6. WOOD OR MASONRY OPENINGS, BUCKS, AND BUCK FASTENERS, BY OTHERS, SHALL BE PROPERLY DESIGNED AND INSTALLED TO TRANSFER LOADS TO THE STRUCTURE.
7. ANCHOR TYPE, SIZE, SPACING, AND EMBEDMENT SHALL BE AS INDICATED IN THIS APPROVAL. ANCHOR EMBEDMENT TO SUBSTRATE SHALL BE BEYOND WALL DRESSING OR STUCCO.
8. ALL FASTENERS PENETRATING INTO PRESSURE TREATED WOOD SHALL BE CAPABLE OF PREVENTING CORROSION DUE TO REACTION WITH PRESSURE TREATMENT CHEMICALS.
9. DISSIMILAR MATERIALS THAT COME INTO CONTACT SHALL BE PROTECTED TO PREVENT REACTIONS IN ACCORDANCE WITH FBC AND ADM−1−2010 SECTION M.7.
10. WIND LOAD ALLOWABLE STRESS INCREASES WERE NOT USED IN THIS APPROVAL. A WIND LOAD DURATION FACTOR Cd = 1.6 WAS USED FOR THE ANALYSIS OF WOOD SCREWS.
11. DOORS SHALL BE GLAZED IN ACCORDANCE WITH DETAIL A AND B ON THIS SHEET AND THE TABLE BELOW.

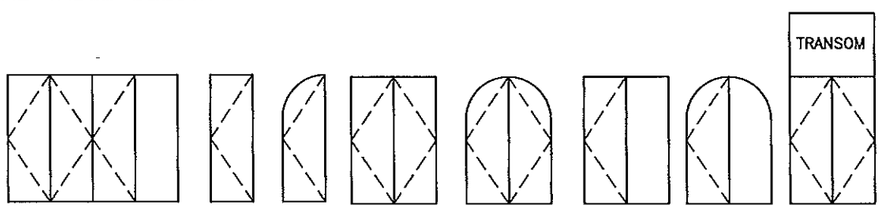

APPROVED CONFIGURATIONS

DRAWING INDEX

SHT. NO.	DESCRIPTION
1	NOTES AND GLAZING DETAILS
2	WINDOW ELEVATIONS
3	BILL OF MATERIALS
4	MOUNTING OPTIONS
5 − 7	SECTION DETAILS
8	EXTRUSION PROFILES
9 − 13	HARDWARE DETAILS
13 − 15	ISOMETRIC VIEWS
15	MOLDING OPTIONS

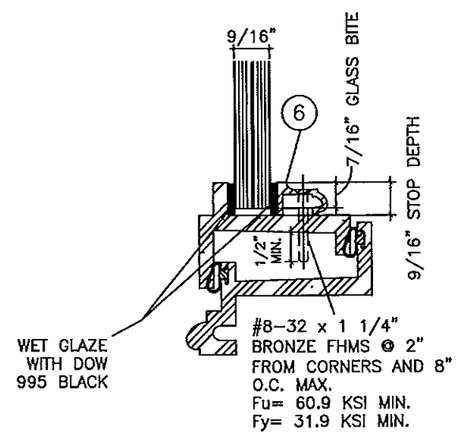

(A) SAF−GLAS GLAZING DETAIL

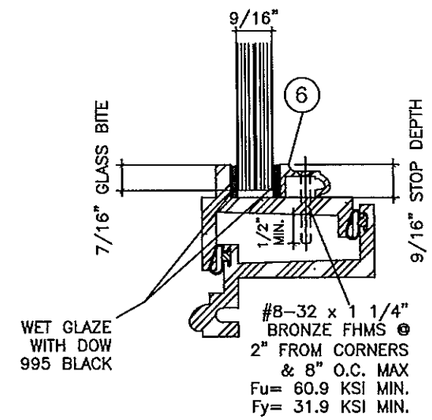

(B) SAFLEX CP GLAZING DETAIL

GLASS TYPE	GLASS THICKNESS	LAYERS	PRESSURE
SAF−GLAS (GLASS TYPE A)	9/16"	1. 3/16" HEAT STRENGTHENED GLASS 2. 0.05" URETHANE ADHESIVE 3. 0.125" POLYCARBONATE BY SAF−GLAS 4. 0.05" URETHANE ADHESIVE 5. 3/16" HEAT STRENGTHENED GLASS	+70/−70 PSF
SAFLEX CP (GLASS TYPE B)	9/16"	1. 1/4" HEAT STRENGTHENED GLASS 2. 0.075 SAFLEX CP INTERLAYER 3. 1/4" HEAT STRENGTHENED GLASS	+70/−70 PSF

Approved as complying with the Florida Building Code
Date 8/14/2014
NOA# 13-1028.10
Miami Dade Product Control
By

SCOTT WOLTERS
FLPE# 62354
WOLTERS ENGINEERING, INC.
(COA# 27194)
1725 SW 25TH AVENUE
FT. LAUDERDALE, FL 33312

JUN 04 2014

PALMETTO SERIES BRONZE DOORS

HISTORICAL ARTS & CASTING, INC.
5580 WEST BALLOY PARK RD., WEST JORDAN, UT. 84088-5642
PHONE 801-280-2400 FAX 801-280-2493

2/14/14 RKH

NOTES REVISIONS

PALMETTO SERIES DOORS

NOTE: MUNTINS OPTIONAL

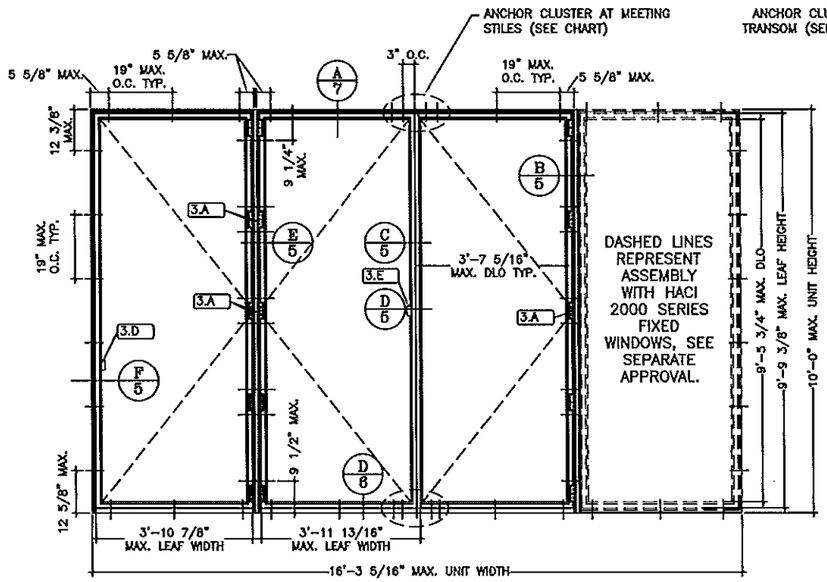

1 OUTSWING PAIR MULLED WITH SINGLE AND FIXED SIDELITE
LOCK OPTIONS 5 (PAIR) AND 1 (SINGLE) SHOWN
(EXTERIOR VIEW)

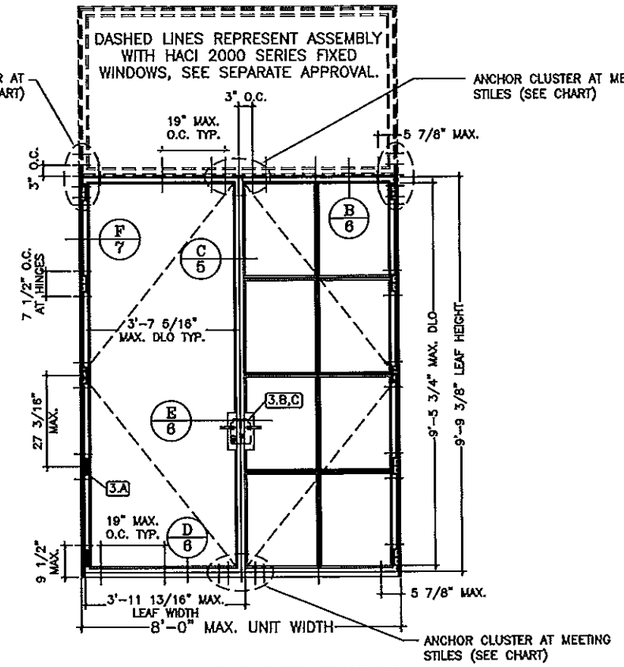

2 OUTSWING PAIR WITH TRANSOM
LOCK OPTION 4 SHOWN
(EXTERIOR VIEW)

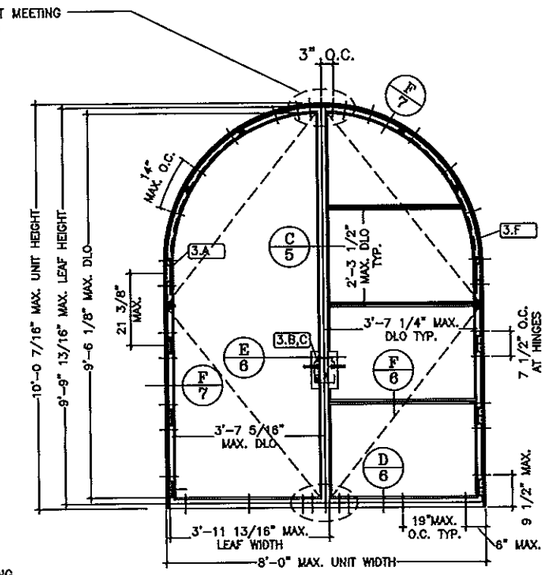

3 OUTSWING PAIR
WITH ROUND TOP
LOCK OPTION 6 SHOWN
(EXTERIOR VIEW)

ANCHOR CLUSTER CHART				
	AT MEETING STILES		AT TRANSOM	
	DOOR FRAME SIZE (WxH)		DOOR FRAME SIZE (WxH)	
SUBSTRATE	UP TO 6'-6" x 9'-3"	UP TO 8'-0" x 10'-0"	UP TO 6'-6" x 9'-3"	UP TO 8'-0" x 10'-0"
WOOD (S.G. ≥ 0.5)	7	9	6	8
CONCRETE/CMU (3000 psi / ASTM C90)	4	5	4	5
STEEL/ALUMINUM (16 Ga / 1/8")	3	4	3	4

HINGES (PART# 3A)	
MAX DOOR SIZE (FRAME SIZE)	HINGES REQUIRED (PER LEAF)
3'-3" x 9'-3" (SINGLE)	4
6'-6" x 9-3" (PAIRS)	4
4'-0" x 10'-0" (SINGLE)	5
8'-0" x 10'-0" (PAIRS)	5
8'-0" x 10'-0" ROUND TOP (PAIRS ONLY)	4

LOCK OPTIONS			
OPTION #	MAX DOOR SIZE (FRAME SIZE)	ACTIVE LEAF	INACTIVE LEAF
1	3'-3" x 9'-3" (SINGLE ONLY)	MULTI-POINT ROLLER LATCH WITH LEVER (PART# 3D)	N/A
2	3'-4 3/4" x 9'-3" (SINGLE) 6'-6" x 9-3" (PAIRS)	MORTISE LOCK ASSEMBLY (PART# 3I)	FLUSH BOLTS (PART# 3H)
3	3'-3" x 9'-3" (SINGLE) 6'-6" x 9-3" (PAIRS)	CREMONE BOLT ASSEMBLY (PART# 3G)	CREMONE BOLT ASSEMBLY (PART# 3G)
4	4'-0" x 10'-0" (SINGLE) 8'-0" x 10'-0" (PAIRS)	MORTISE GEAR LOCK (PART# 3B,3C)	MORTISE GEAR LOCK (PART# 3B,3C)
5	4'-0" x 10'-0" (SINGLE) 8'-0" x 10'-0" (PAIRS)	MULTI-POINT LEVER LOCK (PART# 3E)	MULTI-POINT LEVER LOCK (PART# 3E)
6	8'-0" x 10'-0" ROUND TOP (PAIRS ONLY)	MORTISE GEAR LOCK (PART# 3B,3C) WITH CURVED MULTI-POINT LOCK AT HEAD (PART# 3F)	MORTISE GEAR LOCK (PART# 3B,3C) WITH CURVED MULTI-POINT LOCK AT HEAD (PART# 3F)

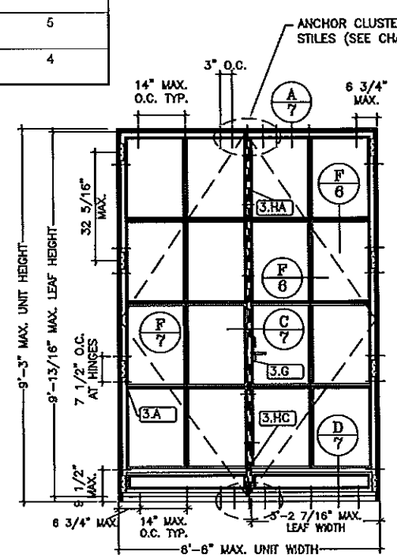

4 OUTSWING PAIR
WITH OPTIONAL KICKPLATE
LOCK OPTION 3 SHOWN
(EXTERIOR VIEW)

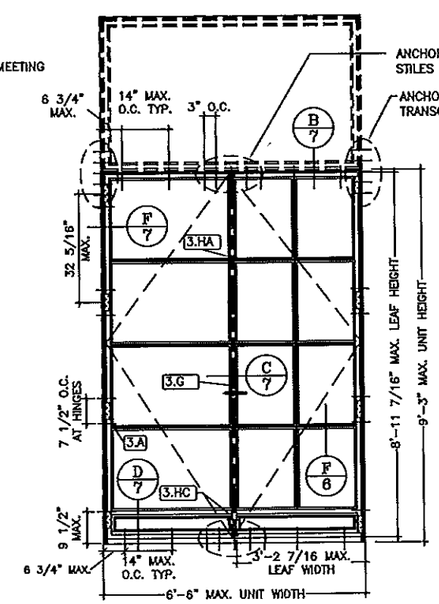

5 OUTSWING PAIR WITH TRANSOM
AND OPTIONAL KICKPLATE
LOCK OPTION 3 SHOWN
(EXTERIOR VIEW)

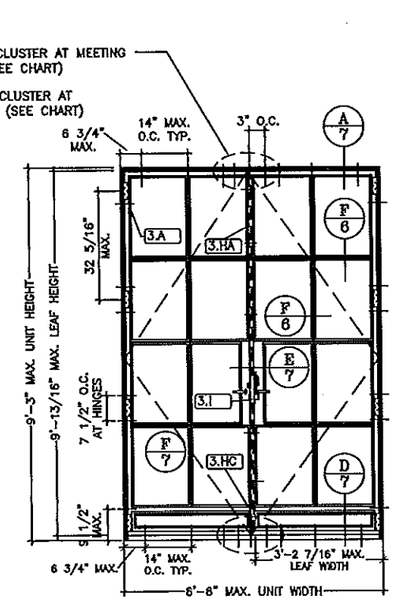

6 OUTSWING PAIR
WITH OPTIONAL KICKPLATE
LOCK OPTION 2 SHOWN
(EXTERIOR VIEW)

Approved as complying with the Florida Building Code
Date 9/17/2014
NOA# 13-1028.10
Miami-Dade Product Control
By

SCOTT WOLTERS
FLPE# 62354
WOLTERS ENGINEERING, INC.
(COA# 27194)
1725 SW 25TH AVENUE
FT. LAUDERDALE, FL 33312

JUN 04 2014

PALMETTO SERIES BRONZE DOORS

HISTORICAL ARTS & CASTING, INC.
5580 WEST BALLOY PARK RD., WEST JORDAN, UT. 84088-5642
PHONE 801-280-2400 FAX 801-280-2493

2/14/14

RKH

NOTES | REVISIONS

BILL OF MATERIALS

INDEX	PART DESCRIPTION	MATERIAL	MANUFACTURER	DET/SHEET
	HACI-2009-W			
	1. BRONZE EXTRUSIONS			
1	A. SILL-DW2000.01/CR99B1.1	BRONZE 385	HACI	1/8 OF 15
2	B. JAMB-DW2000.02/CR99B1.2	BRONZE 385	HACI	2/8 OF 15
3	C. HEAD-DW2000.03 /CR99B1.3	BRONZE 385	HACI	3/8 OF 15
4	D. SASH-DW2000.04/CR99B2.1	BRONZE 385	HACI	4/8 OF 15
5	E. MUNTIN-DW2000.05/CR99B2.2	BRONZE 385	HACI	5/8 OF 15
6	F. GLASS STOP-DW2000.06/CR99B3	BRONZE 385	HACI	6/8 OF 15
20	G. MEETING STILE-DW2000.07/CR99B2.3	BRONZE 385	HACI	20/8 OF 15
7	H. MEETING STILE-DW2000.08	BRONZE 385	HACI	7/8 OF 15
8	I. MEETING STILE-DW2000.09	BRONZE 385	HACI	8/8 OF 15
21	J. TRANSOM WINDOW AND DOOR	BRONZE 385	HACI	21/8 OF 15
	HEADER -- CR99B1.7			
	1.K AND 1.L WERE NOT USED			
10	M. MACHINED MOLDING-DW2000.MP1	S.S. 304	HACI	10/8 OF 15
11	N. MACHINED BAR-DW2000.MP2	S.S. 304	HACI	11/8 OF 15
12	O. MACHINED BAR-DW2000.MP3	S.S. 304	HACI	12/8 OF 15
13	P. MACHINED BAR-DW2000.MP4	S.S. 304	HACI	13/8 OF 15
14	Q. MACHINED BAR-DW2000.MP5	S.S. 304	HACI	14/8 OF 15
15	R. MACHINED BAR-DW2000.MP8	S.S. 304	HACI	15/8 OF 15
16	S. MACHINED BAR-DW2000.MP7	S.S. 304	HACI	16/8 OF 15
17	T. MACHINED BAR-DW2000.MP8	S.S. 304	HACI	17/8 OF 15
	U. KICK PLATE HORIZONTAL DIVIDER	BRONZE 385	HACI	
	V. KICK PLATE SPACER CHANNELS	BRONZE 385	HACI	
	W. 1/8" BRONZE INTERIOR FILLER PLATE	BRONZE 385	HACI	
	X. 1/8" BRONZE EXTERIOR FILLER PLATE	BRONZE 385	HACI	
19	Y. KICK PLATE-DW2000.13/CR99B2.4	BRONZE 385	HACI	19/8 OF 15
22	Z. KICK PLATE W/ NOTCH-CR99B2.4A	BRONZE 385	HACI	22/8 OF 15
	2. GASKETS			
23	A. 7/16" GASKET-DW2000.G1	SILICONE	WEST COAST GASKET CO.	23/8 OF 15
24	B. 3/8" GASKET-CR99S6	SILICONE	WEST COAST GASKET CO.	24/8 OF 15
25	C. MEETING STILE GASKET-CR99S6A	SILICONE	WEST COAST GASKET CO.	25/8 OF 15
	3. HARDWARE			
	A. 5" HINGE			1/9 OF 15
	A. FINIAL	BRASS 360	HACI	
	B. 1/4" S.S. HINGE PIN	S.S. 304	HACI	
	C. JAMB LEAF	BRASS 360	HACI	
	D. SASH LEAF	BRASS 360	HACI	
	B. MULTI-POINT MORTISE GEAR LOCK			2/9 OF 15
	A. DOG	BRASS 360	HACI	
	B. DOG PIN	S.S. 304	HACI	
	C. #10 FHMS	BRASS 360	HACI	
	D. SLIDE BLOCK	BRASS 360	HACI	
	E. ACTIVE WING BAR	BRASS 360	HACI	
	F. GU LOCK 8778107 90041	BRASS 360	HACI	
	H LS9000 MP GEAR M/45/25/09			
	G. 3/16" X 3/8"-8/32" ROLLER SHOULDER SCREW	S.S. 304	HACI	
	H. ACTIVE WING COVER PLATE	BRASS 360	HACI	
	I. ROD #1	BRASS 360	HACI	
	J. ROD #2	BRASS 360	HACI	
	K. ROD #3	BRASS 360	HACI	
	L. #8 FHMS	BRASS 360	HACI	
	M. INACTIVE WING COVER PLATE #1	BRASS 360	HACI	
	N. INACTIVE WING COVER PLATE #2	BRASS 360	HACI	
	O. INACTIVE WING COVER PLATE #3	BRASS 360	HACI	
	P. INACTIVE WING COVER PLATE #4	BRASS 360	HACI	
	Q. RECEIVER	BRASS 360	HACI	
	R. FLUSH BOLT	BRASS 360	HACI	
	S. INACTIVE WING BAR	BRASS 360	HACI	
	T. INACTIVE WING ROD	BRASS 360	HACI	
	U. ROD CONNECTOR #1	BRASS 360	HACI	
	V. ROD CONNECTOR #2	BRASS 360	HACI	
	W. CAM	BRASS 360	HACI	
	C. MULTI-POINT MORTISE GEAR LOCK			
	A. MEETING STILE-DW2000.09	BRASS 360	HACI	
	B. MEETING STILE-DW2000.08	BRASS 360	HACI	
	C. SILICONE GASKET-DW2000.G1	SILICONE	HACI	
	D. ACTIVE COVER BOX	BRASS 360	HACI	
	E. INACTIVE INTERIOR COVER PLATE	BRASS 360	HACI	
	F. INACTIVE EXTERIOR COVER PLATE	BRASS 360	HACI	
	G. INACTIVE COVER BOX	BRASS 360	HACI	
	H. GU LOCK 8778107 90041 H	BRASS 360	HACI	
	LS9000 MP GEAR M/45/25/09			
	I. HANDLE	BRASS 360	HACI	
	J. STEEL INSERT-DW.2000.MP3	S.S. 304	HACI	
	K. STEEL INSERT-DW.2000.MP4	S.S. 304	HACI	
	L. RECEIVER	BRASS 360	HACI	
	M. LOCK FACEPLATE	BRASS 360	HACI	
	N. STRIKE PLATE	BRASS 360	HACI	
	O. #8 FHMS	BRASS 360	HACI	
	P. #10 FHMS	BRASS 360	HACI	
	Q. ACTIVE EXTERIOR COVER PLATE	BRASS 360	HACI	
	R. ACTIVE INTERIOR COVER PLATE	BRASS 360	HACI	
	S. THUMB TURN	BRASS 360	HACI	
	T. LOCK CYLINDER	BRASS 360	HACI	
	U. SET SCREW	BRASS 360	HACI	
	V. 3/4" X 3/4" X 1/8" STEEL ANGLE 1" LONG	STEEL	HACI	

PART DESCRIPTION	MATERIAL	MANUFACTURER	DET/SHEET
HACI-2009-W			
3. HARDWARE (CONTINUED)			
D. MULTI-POINT ROLLER LATCH			1/10 OF 15
A. #10 FHMS	BRASS 360	HACI	
B. ROLLER SHOULDER SCREW	S.S. 304	HACI	
C. ROLLER	BRASS 360	HACI	
D. TOP GUIDE	BRASS 360	HACI	
E. LEVER	BRASS 360	HACI	
F. WINDOW LEVER HOUSING	BRASS 360	HACI	
G. WASHER	DELRIN	HACI	
H. LEVER LINKAGE	BRASS 360	HACI	
I. GUIDE	BRASS 360	HACI	
J. ROD	BRASS 360	HACI	
K. ROLLER DOCK	BRASS 360	HACI	
L. #10 FHMS	BRASS 360	HACI	
M. WASHER	BRASS 360	HACI	
N. ROD LINKAGE ARM	BRASS 360	HACI	
O. BOLT	BRASS 360	HACI	
P. FINGER PULL	BRONZE 385	HACI	
E. MULTI-POINT LEVER LOCK			1/11 OF 15
A. RECEIVER COVER	BRASS 360	HACI	
B. #10 FHMS	BRASS 360	HACI	
C. UPPER COVER	BRASS 360	HACI	
D. LOCK COVER	BRASS 360	HACI	
E. FINGER PULL	BRONZE 385	HACI	
F. GEAR TRAVEL	BRASS 360	HACI	
G. DOG	BRASS 360	HACI	
H. ROD #1	BRASS 360	HACI	
I. ROD #2	BRASS 360	HACI	
J. BOTTOM COVER	BRASS 360	HACI	
K. SLIDE BLOCK	BRASS 360	HACI	
L. 3/16" X 3/8"-8/32" SHOULDER SCREW	S.S. 304	HACI	
M. DOOR LEAF INSERT	BRASS 360	HACI	
N. ROD #3	BRASS 360	HACI	
O. ROD #4	BRASS 360	HACI	
P. DOG PIN	S.S. 304	HACI	
Q. #8 FHMS	BRASS 360	HACI	
R. ACTUATOR BRACKET BOTTOM	BRASS 360	HACI	
S. CAM GEAR	BRASS 360	HACI	
T. ACTUATOR BRACKET TOP	BRASS 360	HACI	
U. HANDLE MOUNTING BLOCK	BRASS 360	HACI	
V. HANDLE	BRASS 360	HACI	
W. ROD #5	BRASS 360	HACI	
X. DOOR LEAF INSERT	BRASS 360	HACI	
F. MULTI-POINT LOCK (ROUNDED UNIT)			1/12 OF 15
A. DOG RECEIVER	BRASS 360	HACI	
B. #10 FHMS	BRASS 360	HACI	
C. SLIDE BLOCK MOUNTING BRACKET	BRASS 360	HACI	
D. DOG	BRASS 360	HACI	
E. DOG PIN	BRASS 360	HACI	
F. SLIDE BLOCK	BRASS 360	HACI	
G. #8 FHMS	BRASS 360	HACI	
H. BUTTON RECEIVER	BRASS 360	HACI	
I. SLIDE BAR BRACKET I	BRASS 360	HACI	
J. BUTTON	BRASS 360	HACI	
K. SLIDE BAR	S.S. 304	HACI	
L. SLIDE BAR BRACKET II	BRASS 360	HACI	
M. HANDLE BRACKET	BRASS 360	HACI	
N. HANDLE	BRASS 360	HACI	
G. CREMONE BOLT			1/13 OF 15
A. CREMONE BOX-CR99B4.3A	BRONZE 385	HACI	
B. 4) #10-24X1/2 F.H.M SCREW	BRASS 360	HACI	
C. COVER PLATE CR99B4.3B	BRONZE 385	HACI	
C1. 2) 8/32 X1/4 F.H.M SCREW	BRASS 360	HACI	
D. ROCKER ARM CR99B4.3C	BRONZE 385	HACI	
E. DOGS ONE RH CR99B4.3DR	BRASS 360	HACI	
F. DOGS ONE RL. CR99B4.3DL	BRASS 360	HACI	
G. LEVER HANDLE CR99B4.3E	BRONZE 385	HACI	
H. LEVER BOLT CR99B4.3F	BRONZE 385	HACI	
I. CREMONE BOX-CR99B4.3G	BRONZE 385	HACI	
J. 3) 1/4-20X 1/2F.H.M.SCREWS	BRASS 360	HACI	
K. CREMONE ROD-CR99B4.3HR	BRASS 360	HACI	
L. CREMONE ROD-CR99B4.3HL	BRASS 360	HACI	
M. 2) CREMONE STRIKES-CR99B4.3I	BRASS 360	HACI	
N. 2) 3/8"BRASS ROLLER	BRASS 360	HACI	
O. 2) 3/16" S.S.DOWL PIN .	S.S. 304	HACI	
P. 4) 10/32X3/8 F.H.M. SCREW	BRASS 360	HACI	
Q. 7) ROD GUIDE-CR99B4.3J1	BRONZE 385	HACI	
S. 14) 10-24X1/2 F.H.M.B.		HACI	
T. 2) 1/4" BALL PLUNGER	BRASS 360	HACI	
U. 2) LATCH BRACKETS RH CR99B4.3LR	BRONZE 385	HACI	
V. 6) #10-24X3/4 F.H.M.B. BRASS	BRASS 360	HACI	
W. 2) LATCH BRACKETS LH CR99B4.3LL	BRONZE 385	HACI	
X. 6)#10-24x3/4 F.H.M.SCREW	BRASS 360	HACI	
Y. FIXED HANDLE CR99B4.3M	BRONZE 385	HACI	
Z. 4) LOCKING LATCH-CR99B4.3KA	BRONZE 385	HACI	
AA. 4) 1/4-20X1/2 F.H.M.B.BRASS	BRASS 360	HACI	
AB. ROD GUIDE W/ LOCKING MECH..	BRONZE 385	HACI	
AC. 2) 1/4 20 FHM SCREWS BRASS	BRASS 360	HACI	
AD. FIXED HANDLE	BRONZE 385	HACI	

PART DESCRIPTION	MATERIAL	MANUFACTURER	DET/SHEET
HACI-2009-W			
3. HARDWARE (CONTINUED)			
H. FLUSH BOLTS			
A. FLUSH BOLT (LOWER)-CR99B4.7B	BRASS 360	HACI	2/10 OF 15
B. 4) 10/24X1/2 F.H.M SCREW	BRASS 360	HACI	
C. FLUSH BOLT (UPPER)-CR99B4.7C	BRASS 360	HACI	3/10 OF 15
D. 8) 10/24X1/2 F.H.M.B SCREW	BRASS 360	HACI	
E. FLUSH BOLT STRIKE PLATE	BRASS 360	HACI	
F. 4) 10/24X 3/4 F.H.M.B SCREW	BRASS 360	HACI	
I. MORTISE LOCK			2/12 OF 15
A. MORTISE HOUSING-CR99B4.7A	BRONZE 385	HACI	
D. REVERSE SHOOT BOLT-CR99B4.7D	BRONZE 385	HACI	
E. STRIKE PLATE-CR99B4.7E	BRASS 360	HACI	
F. 1/4"-20 BRASS FHMB.	BRASS 360	HACI	
G. STRIKE PLATE-CR99B4.7F	BRASS 360	HACI	
H. 1/4"-20 BRASS FHMB.	BRASS 360	HACI	

Approved as complying with the
Florida Building Code
Date 07/17/2014
NOA# 13-1028.10
Miami-Dade Product Control
By

SCOTT WOLTERS
FLPE# 62354
WOLTERS ENGINEERING, INC.
(COA# 27194)
1725 SW 25TH AVENUE
FT. LAUDERDALE, FL 33312

JUN 04 2014

PALMETTO SERIES BRONZE DOORS

HISTORICAL ARTS & CASTING, INC.
5580 WEST BALLOT PARK RD., WEST JORDAN, UT. 84088-5642
PHONE 801-280-2400 FAX 801-280-2493

2/14/14

RKH

NOTES | REVISIONS

MOUNTING OPTIONS

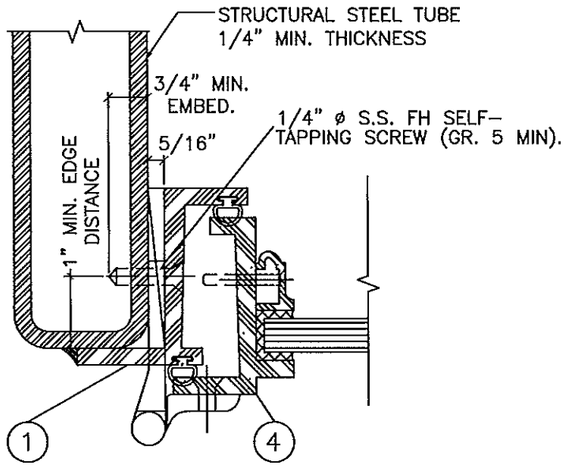

① MOUNT TO STEEL FRAME

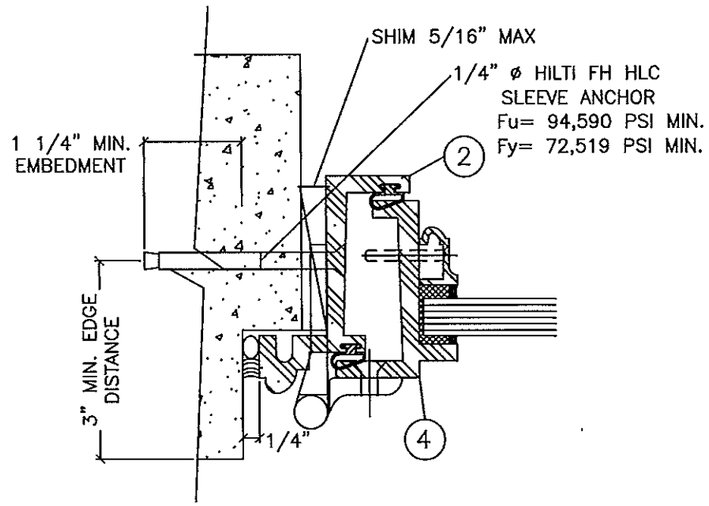

② MOUNT TO BLOCK/CONCRETE/CMU

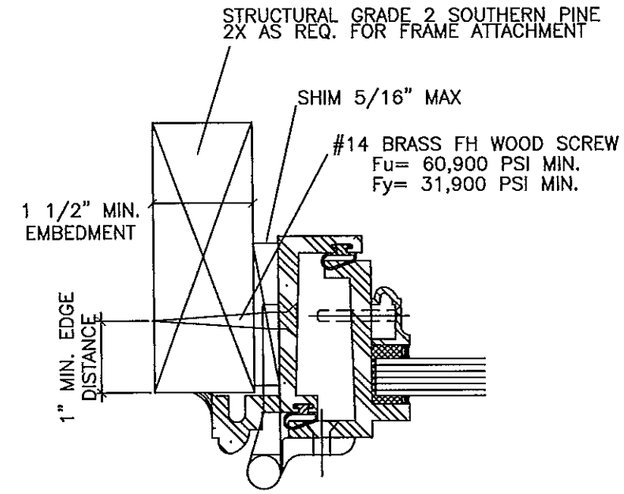

③ MOUNT TO WOOD

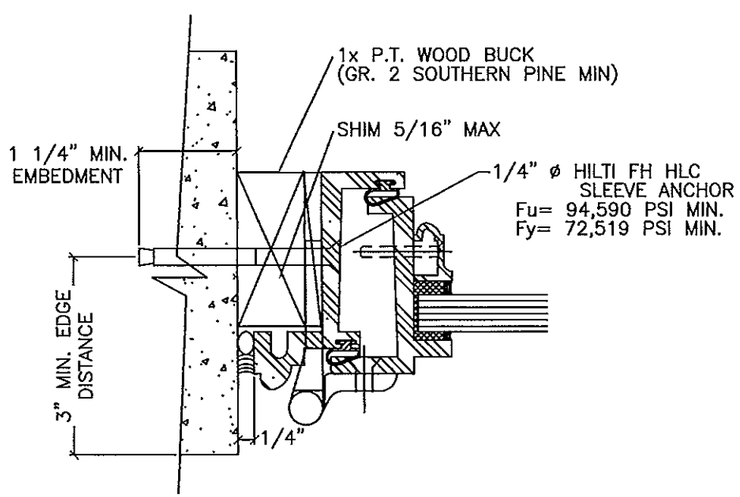

④ MOUNT TO BLOCK/CONCRETE/CMU
THRU WOOD BLOCKING

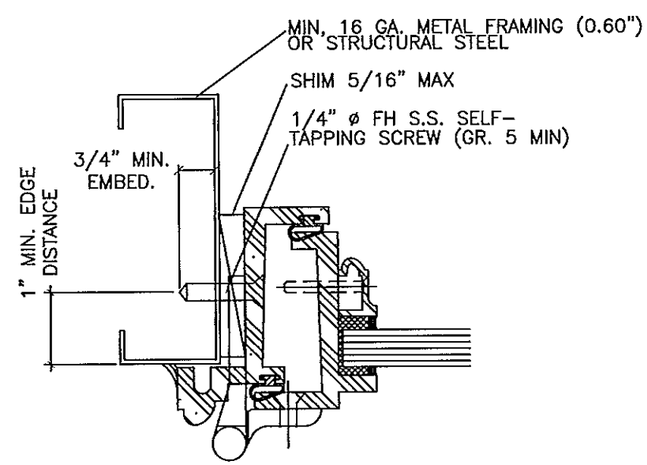

⑤ MOUNT TO METAL STUD

LISTED IN NO PARTICULAR ORDER. SEALANT BY OTHERS. FOR ANCHOR SPACING – SEE ELEVATIONS SHEET 2 OF 15

Approved as complying with the
Florida Building Code
Date 8/11/2014
NOA# 13-1028.10
Miami Dade Product Control
By

SCOTT WOLTERS
FLPE# 62354
WOLTERS ENGINEERING, INC.
(COA# 27194)
1725 SW 25TH AVENUE
FT. LAUDERDALE, FL 33312

JUN 04 2014

PALMETTO SERIES BRONZE DOORS

HISTORICAL ARTS & CASTING, INC.
5580 WEST BALLOY PARK RD., WEST JORDAN, UT. 84088-5642
PHONE 801-280-2400 FAX 801-280-2493

2/14/14

RKH

NOTES | REVISIONS

SECTION DETAILS

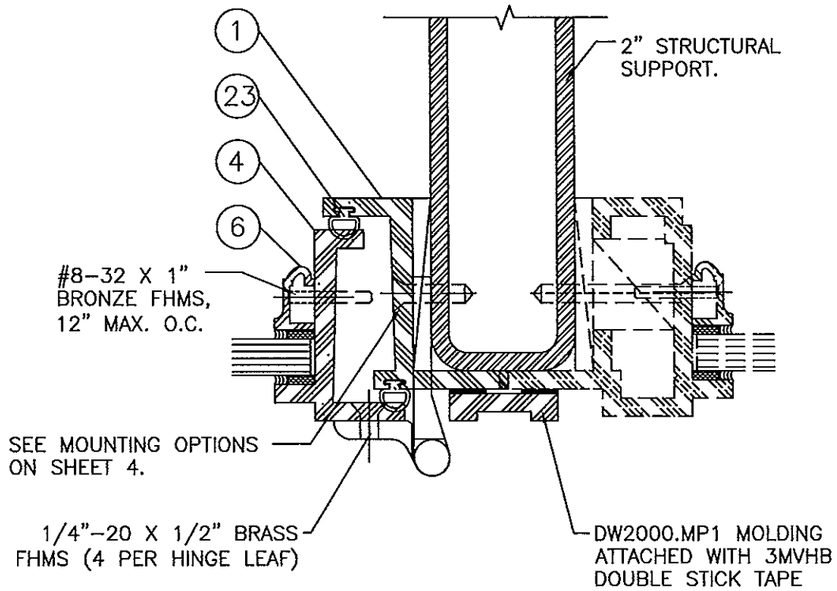

(B) MEETING JAMB

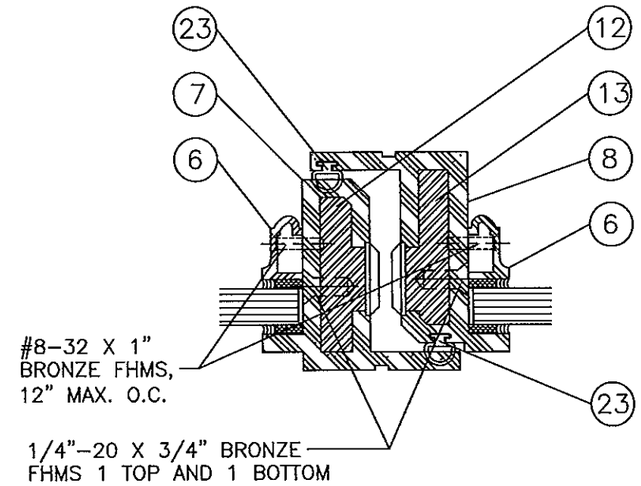

(C) MEETING STILE

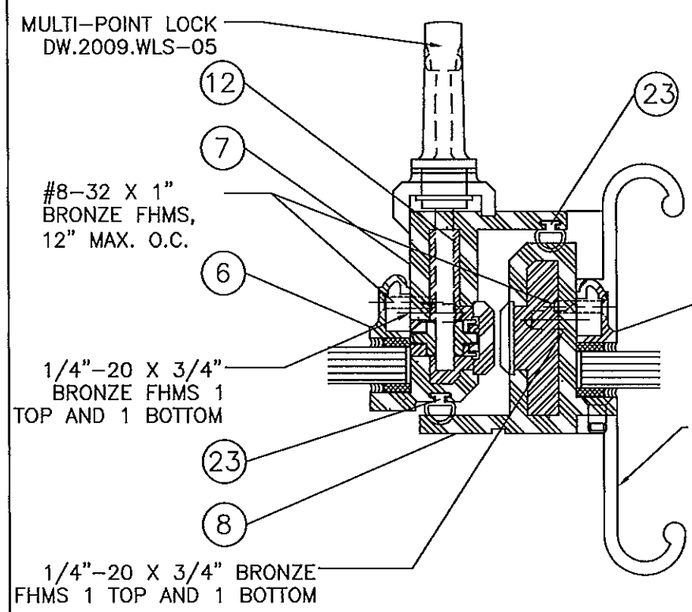

(D) MEETING STILE

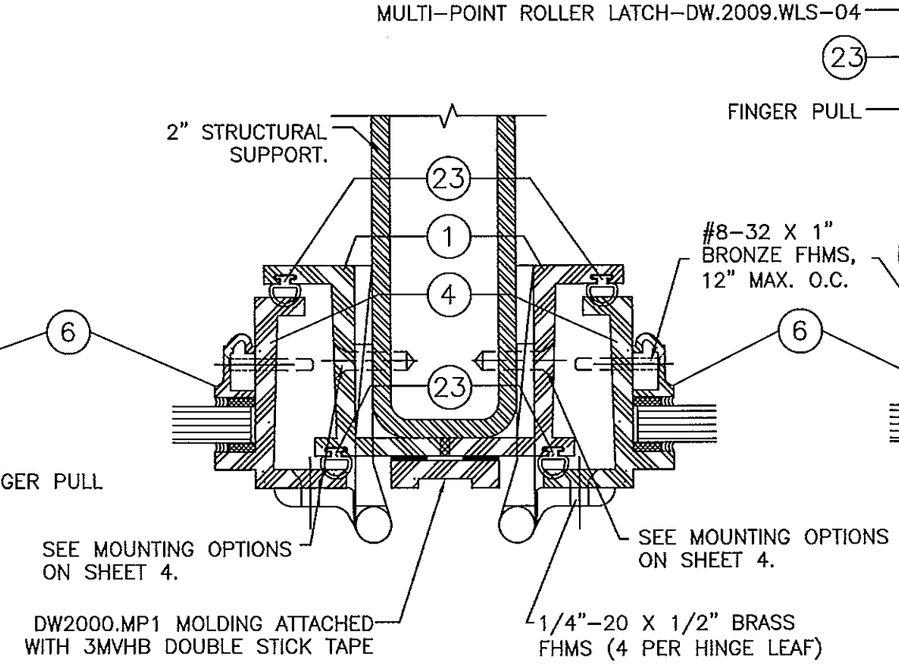

(E) MEETING JAMB

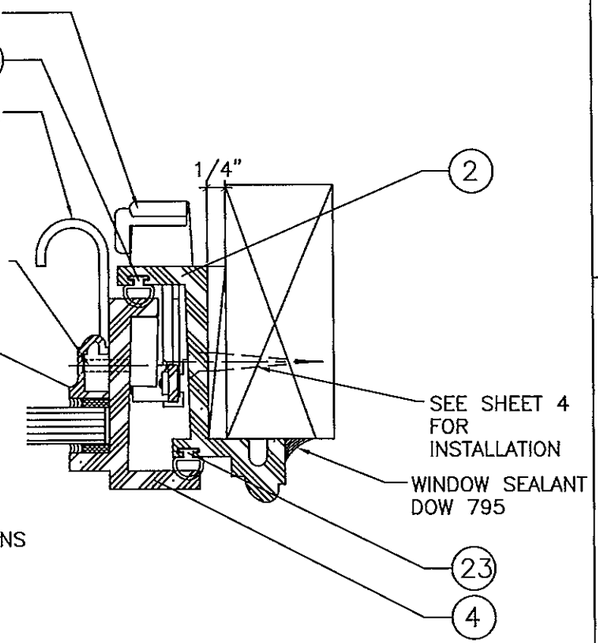

(F) JAMB

Approved as complying with the Florida Building Code
Date 2/13/2014
NOA# 13-1028.10
Miami Dade Product Control
By

SCOTT WOLTERS
FLPE# 62354
WOLTERS ENGINEERING, INC.
(COA# 27194)
1725 SW 25TH AVENUE
FT. LAUDERDALE, FL 33312

JUN 04 2014

PALMETTO SERIES BRONZE DOORS

HISTORICAL ARTS & CASTING, INC.
5580 WEST BALLOY PARK RD., WEST JORDAN, UT. 84088-5642
PHONE 801-280-2400 FAX 801-280-2493

2/14/14

RKH

NOTES | REVISIONS

5 OF 15

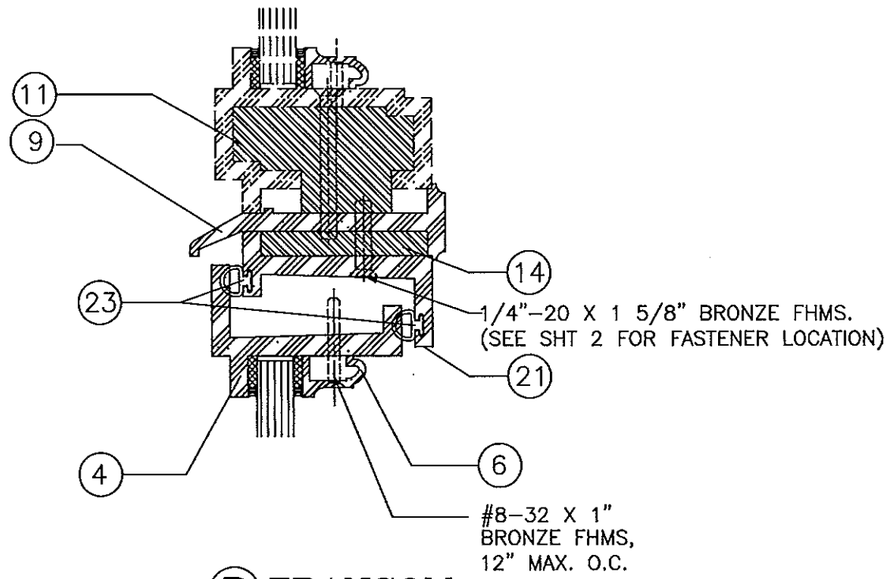

(B) TRANSOM

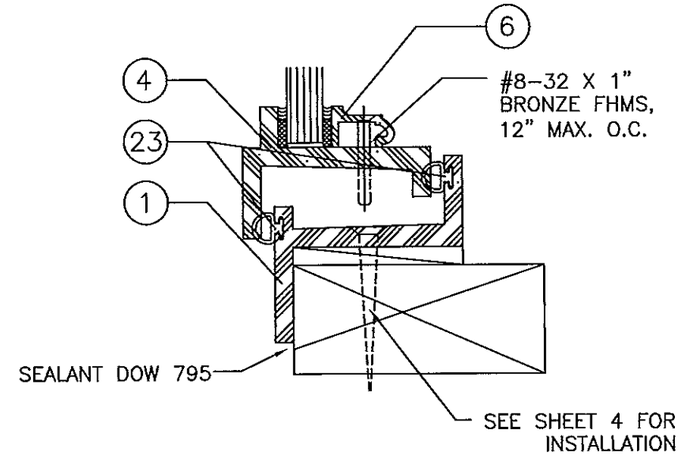

(D) SILL

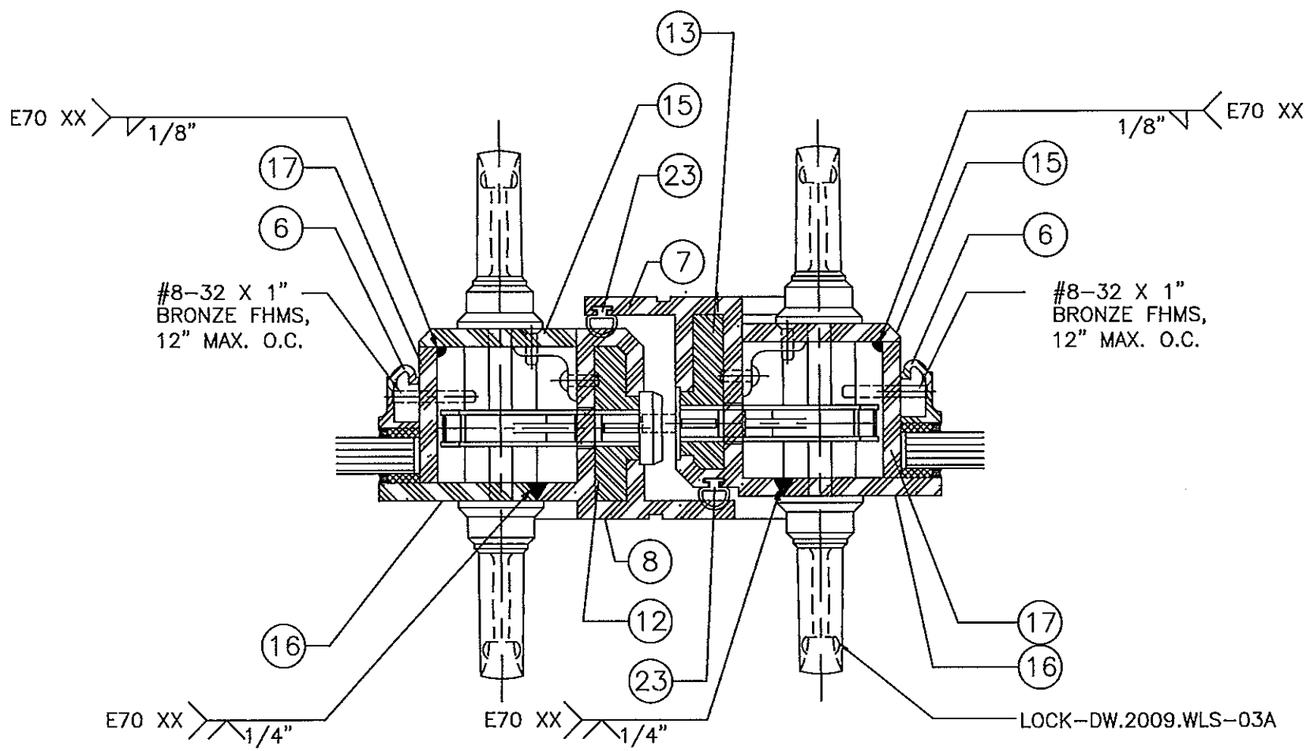

(E) MEETING STILE

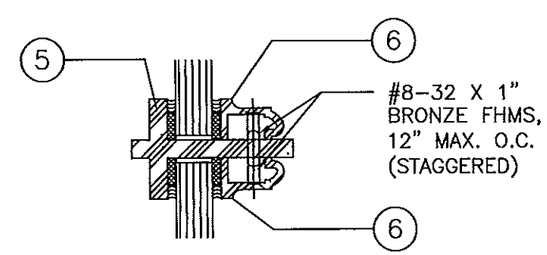

(F) MULLION

Approved as complying with the
Florida Building Code
Date 07/14/2014
NOA# 13-1028.10
Miami-Dade Product Control
By

SCOTT WOLTERS
FLPE# 62354
WOLTERS ENGINEERING, INC.
(COA# 27194)
1725 SW 25TH AVENUE
FT. LAUDERDALE, FL 33312

JUN 04 2014

PALMETTO SERIES BRONZE DOORS

HISTORICAL ARTS & CASTING, INC.
5580 WEST BALLOY PARK RD., WEST JORDAN, UT. 84088-5642
PHONE 801-280-2400 FAX 801-280-2493

2/14/14

RKH

NOTES | REVISIONS

6 OF 15

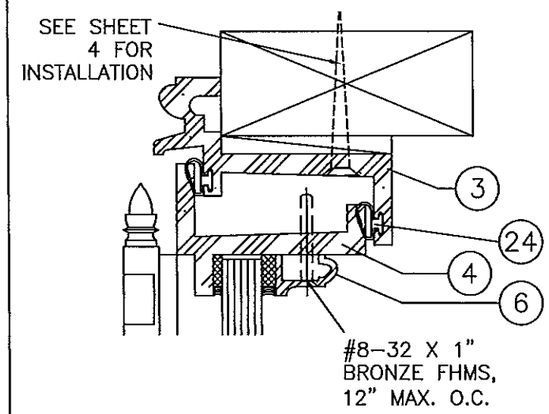

(A) HEAD

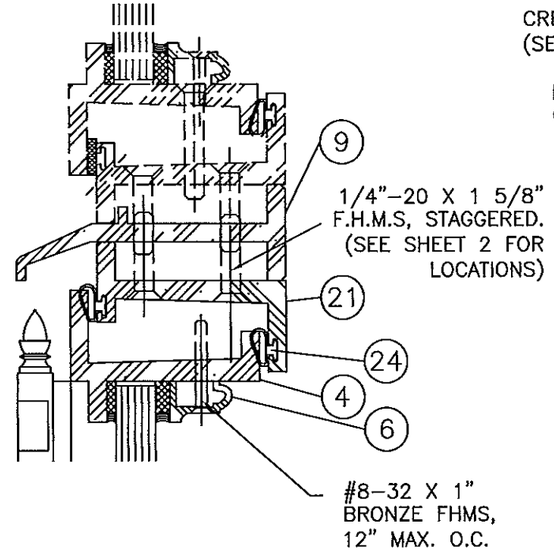

(B) HEAD/TRANSOM

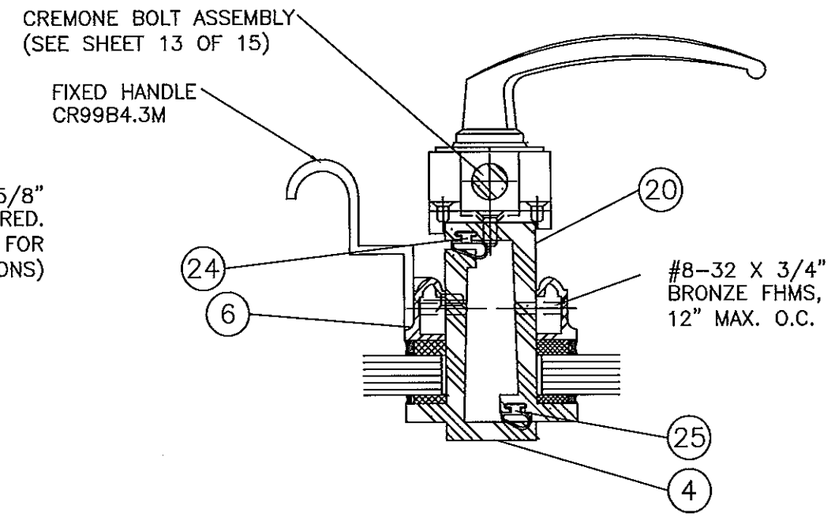

(C) MEETING STILE

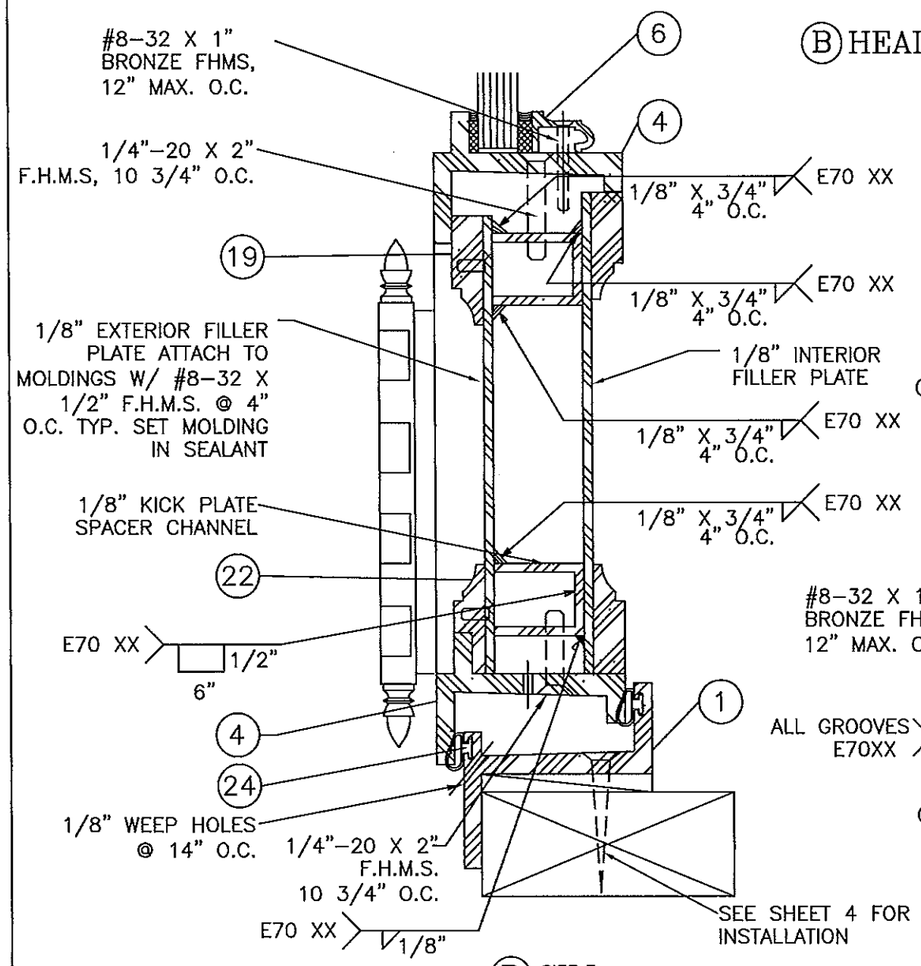

(D) SILL

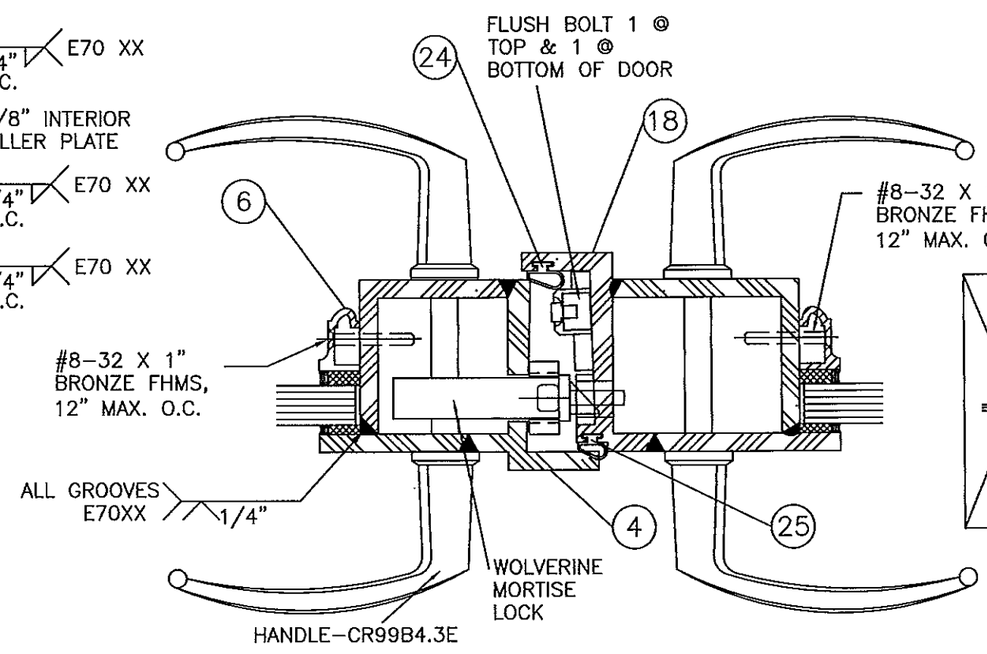

(E) MORTISE LOCK

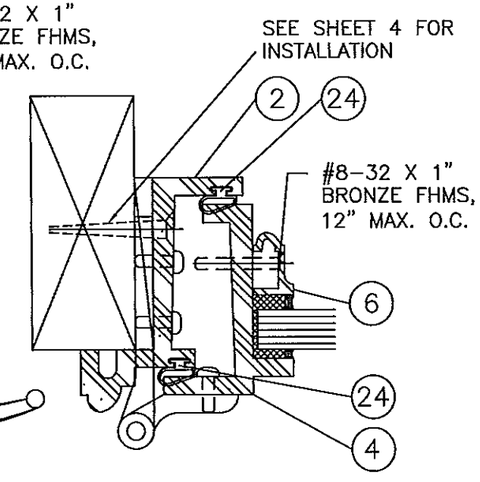

(F) JAMB

Approved as complying with the Florida Building Code
Date 8/11/2014
NOA# 13-1028.10
Miami-Dade Product Control
By

SCOTT WOLTERS
FLPE# 62354
WOLTERS ENGINEERING, INC.
(COA# 27194)
1725 SW 25TH AVENUE
FT. LAUDERDALE, FL 33312
JUN 04 2014

PALMETTO SERIES BRONZE DOORS

HISTORICAL ARTS & CASTING, INC.
5580 WEST BALLOY PARK RD., WEST JORDAN, UT. 84088-5642
PHONE 801-280-2400 FAX 801-280-2493

2/14/14	RKH

NOTES | REVISIONS

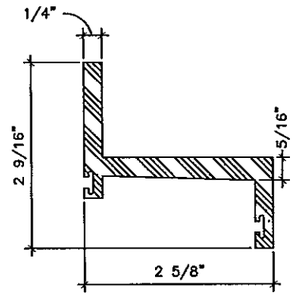

DW2000.01/CR99B1.1
1 SILL

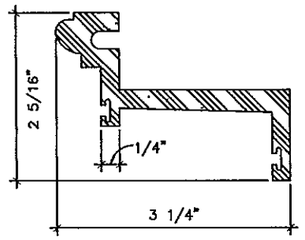

DW2000.02/CR99B1.2
2 JAMB

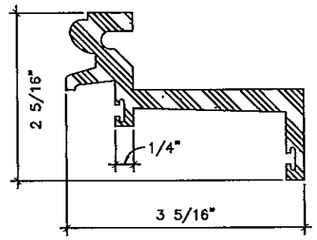

DW2000.03/CR99B1.3
3 HEAD

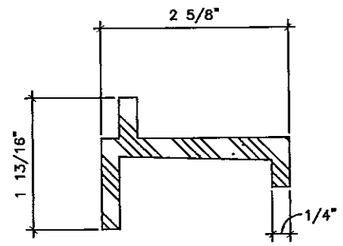

DW2000.04/CR99B2.1
4 SASH

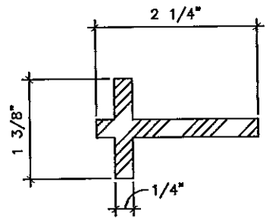

DW2000.05/CR99B2.2
5 MUNTIN

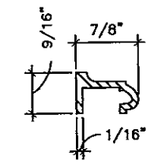

DW2000.06/CR99B3
6 GLASS STOP

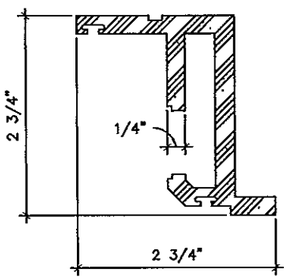

DW2000.08
7 MEETING STILE

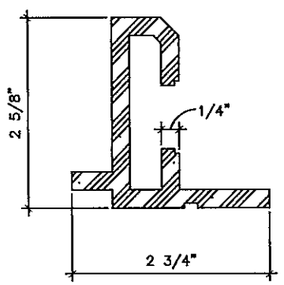

DW2000.09
8 MEETING STILE

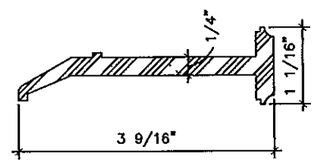

DW2000.11
9 TRANSOM DRIP EXTRUSION B
(ONLY USED WITH TRANSOM)

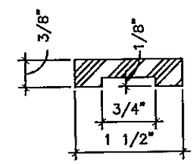

DW2000.MP1
10 MACHINED MOLDING

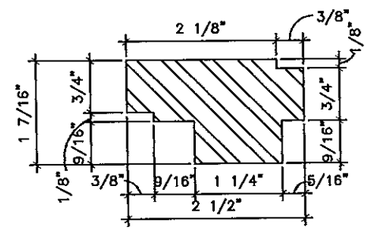

DW2000.MP2, STAINLESS STEEL 304
11 MACHINED BAR
TRANSOM REINFORCEMENT

Approved as complying with the Florida Building Code
Date 8/11/2014
NOA# 13-1028.10
Miami-Dade Product Control
By

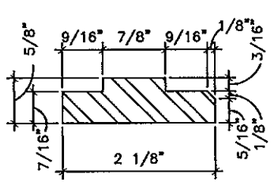

DW2000.MP3, STAINLESS STEEL 304
12 MACHINED BAR

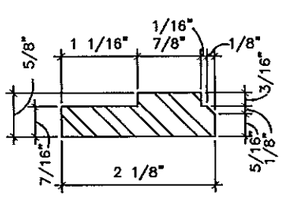

DW2000.MP4, STAINLESS STEEL 304
13 MACHINED BAR

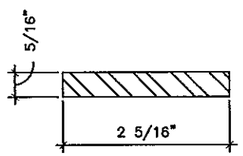

DW2000.MP5, STAINLESS STEEL 304
14 MACHINED BAR
TRANSOM REINFORCEMENT

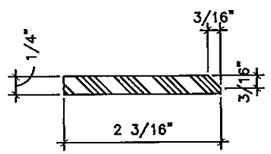

DW2000.MP6
15 MACHINED BAR

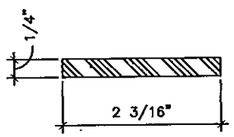

DW2000.MP7
16 MACHINED BAR

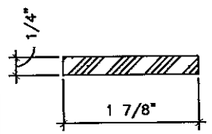

DW2000.MP8
17 MACHINED BAR

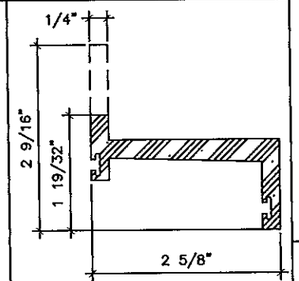

DW2000.01
18 SILL (TRIMMED)

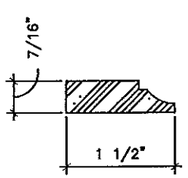

DW2000.13/CR99B2.3
19 KICKPLATE TRIM

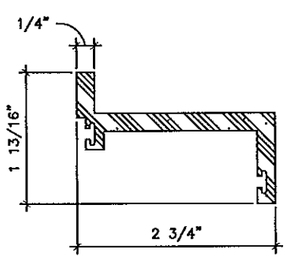

DW2000.07/CR99B2.4
20 MEETING STILE

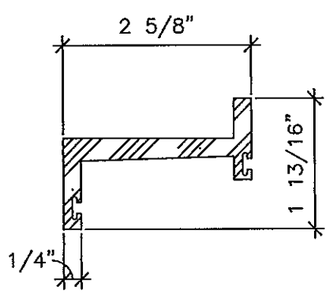

P.N.CR99B1.7
21 TRANS WIN & DR HEAD

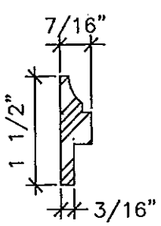

P.N.CR99B2.4A
22 KICKPLATE TRIM (ALT)

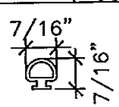

DW2000.G1
23 SILICONE GASKET

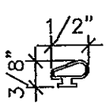

P.N.CR99S6
24 SILICONE GASKET

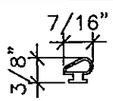

P.N.CR99S6A
25 SILICONE GASKET

EXTRUSION PROFILES

SCOTT WOLTERS
FLPE# 62354
WOLTERS ENGINEERING, INC.
(COA# 27194)
1725 SW 25TH AVENUE
FT. LAUDERDALE, FL 33312

JUN 04 2014

PALMETTO SERIES BRONZE DOORS

HISTORICAL ARTS & CASTING, INC.
5580 WEST BALLOY PARK RD., WEST JORDAN, UT. 84088-5642
PHONE 801-280-2400 FAX 801-280-2493

NOTES	REVISIONS	
	2/14/14	RKH

DW.2009.WLS-03	
LETTER	PART
A	DOG
B	DOG PIN
C	#10 FHMS
D	SLIDE BLOCK
E	ACTIVE WING BAR
F	GU LOCK 8778107 90041 H LS9000 MP GEAR M/45/25/09 (SEE SHEET 8OF17 FOR LOCK BOX DETAILS)
G	3/16" X 3/8"-8/32" ROLLER SHOULDER SCREW
H	ACTIVE WING COVER PLATE
I	ROD #1
J	ROD #2
K	ROD #3
L	#8 FHMS
M	INACTIVE WING COVER PLATE #1
N	INACTIVE WING COVER PLATE #2
O	INACTIVE WING COVER PLATE #3
P	INACTIVE WING COVER PLATE #4
Q	RECEIVER
R	FLUSH BOLT
S	INACTIVE WING BAR
T	INACTIVE WING ROD
U	ROD CONNECTOR #1
V	ROD CONNECTOR #2
W	CAM

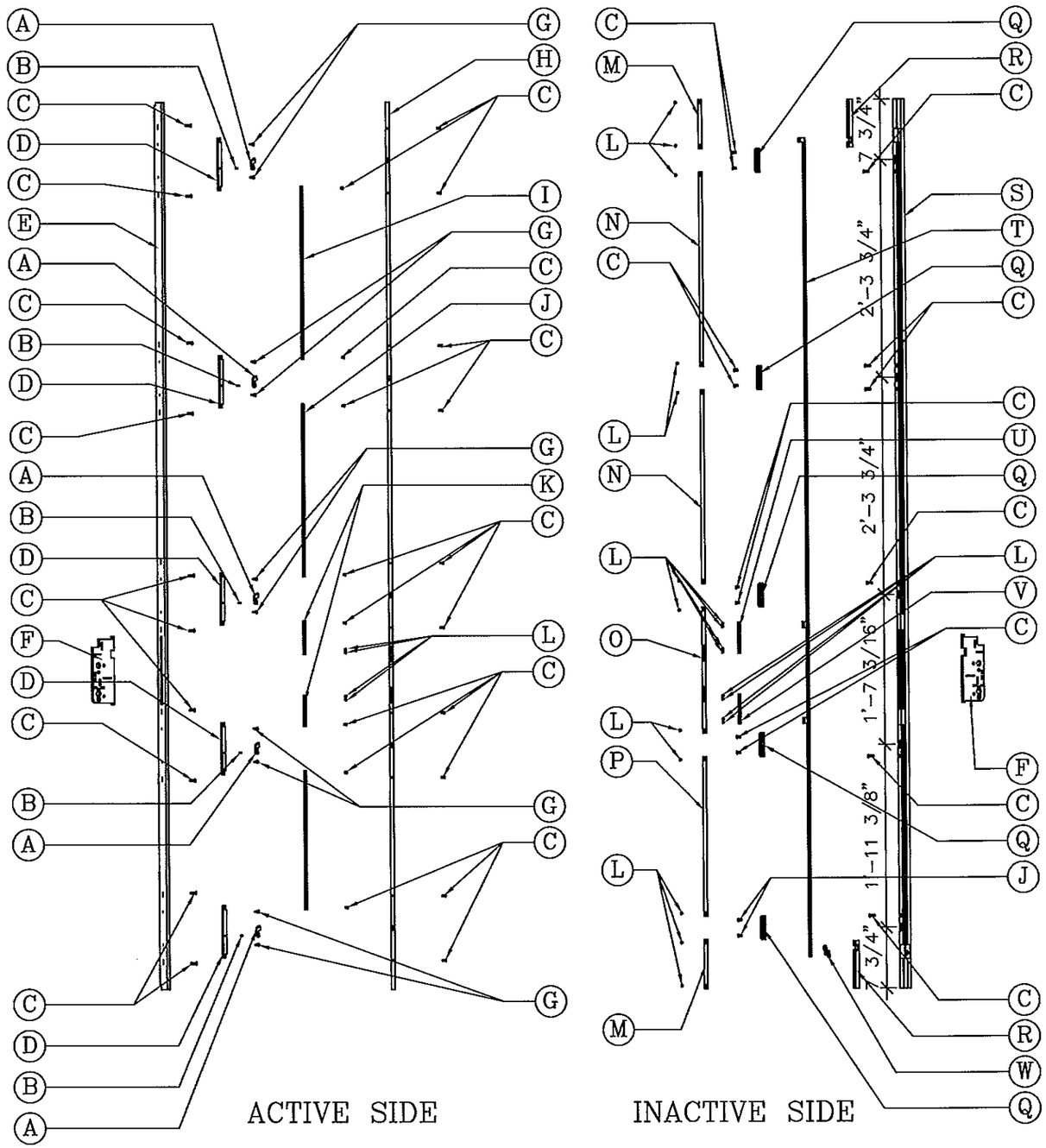

2 DW.2009.WLS-03 HACI MULTI-POINT MORTISE GEAR LOCK

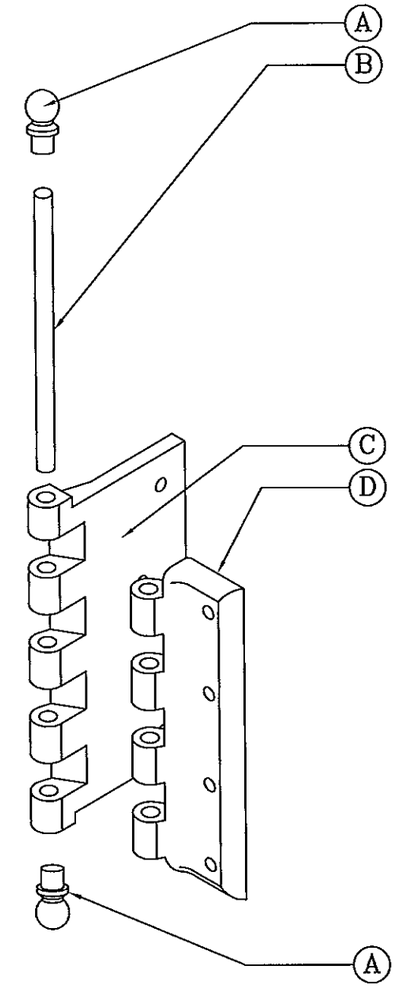

1 EXPLODED 5" HINGE

5" HINGE	
LETTER	PART
A	FINIAL
B	1/4" S.S. HINGE PIN
C	JAMB LEAF
D	SASH LEAF

Approved as complying with the Florida Building Code
Date 8/19/2014
NOA# 13-1028.10
Miami Dade Product Control
By

SCOTT WOLTERS
FLPE# 62354
WOLTERS ENGINEERING, INC.
(COA# 27194)
1725 SW 25TH AVENUE
FT. LAUDERDALE, FL 33312

JAN 04 2014

PALMETTO SERIES BRONZE DOORS

HISTORICAL ARTS & CASTING, INC.
5580 WEST BALLOT PARK RD., WEST JORDAN, UT. 84088-5642
PHONE 801-280-2400 FAX 801-280-2493

2/14/14

RKH

NOTES | REVISIONS

DW.2009.WLS-04	
LETTER	PART
A	#10 FHMS
B	3/16" X 3/8"-8/32" ROLLER SHOULDER SCREW
C	ROLLER
D	TOP GUIDE
E	LEVER
F	WINDOW LEVER HOUSING
G	WASHER
H	LEVER LINKAGE
I	GUIDE
J	ROD
K	ROLLER DOCK
L	#10 PHMS
M	WASHER
N	ROD LINKAGE ARM
O	BOLT
P	FINGER PULL

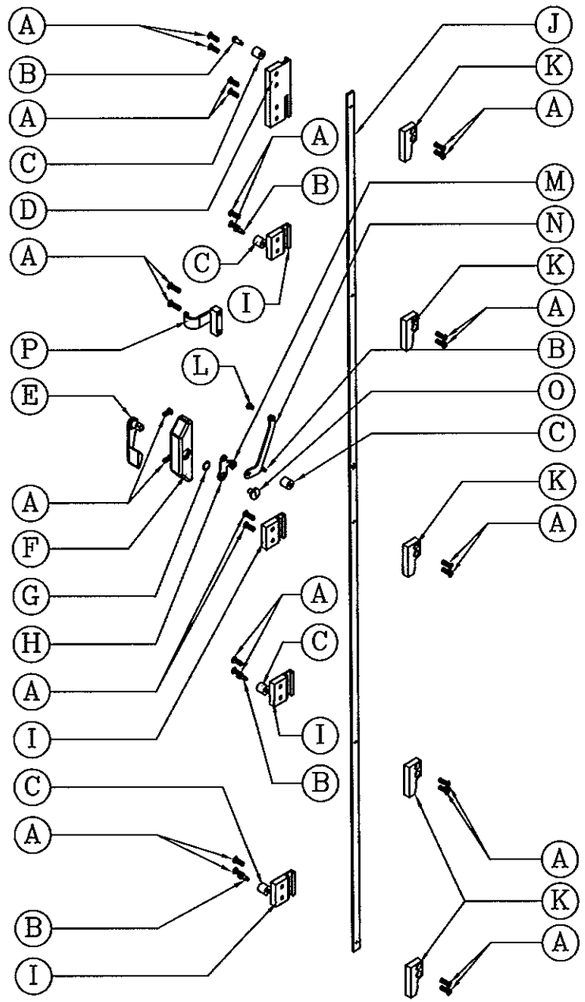

EXPLODED

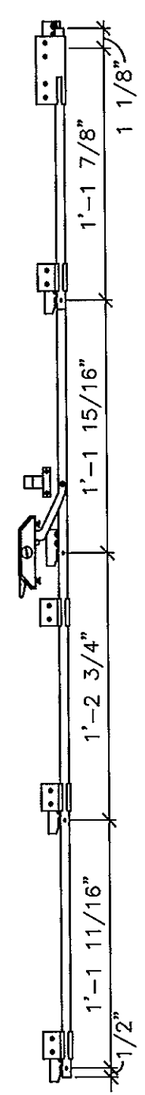

SIDE

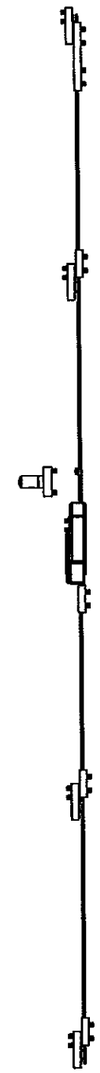

ELEVATION

1 DW.2009.WLS-04 HACI MULTI-POINT ROLLER LATCH WITH LEVER

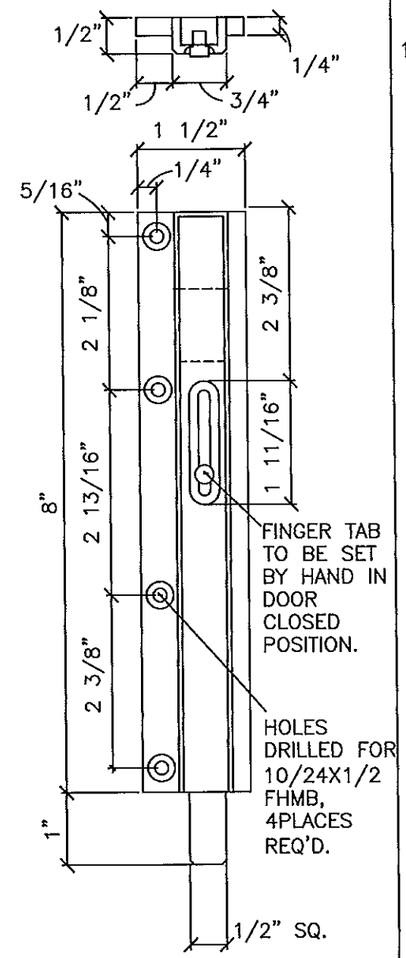

2 LOWER, PN CR99B4.7B
FLUSH BOLT

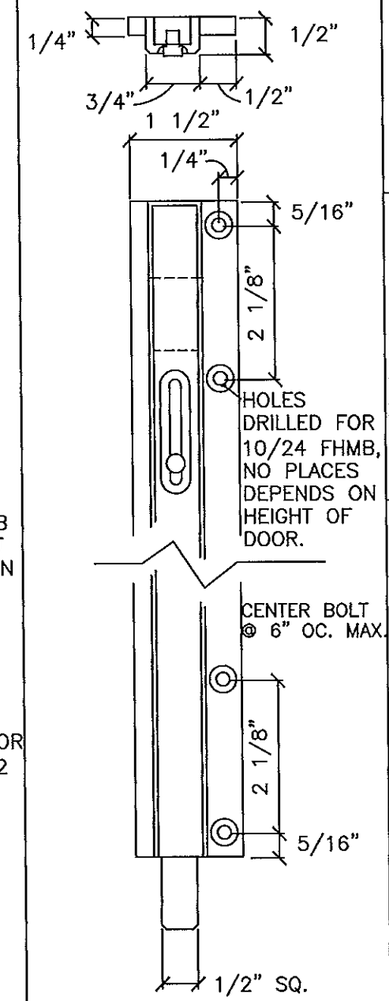

3 UPPER, PN CR99B4.7C
FLUSH BOLT

Approved as complying with the Florida Building Code
Date 8/13/2014
NOA# 13-1028.10
Miami-Dade Product Control
By

SCOTT WOLTERS
FLPE# 62354
WOLTERS ENGINEERING, INC.
(COA# 27194)
1725 SW 25TH AVENUE
FT. LAUDERDALE, FL 33312

JUN 04 2014

PALMETTO SERIES BRONZE DOORS

HISTORICAL ARTS & CASTING, INC.
5580 WEST BALLOY PARK RD., WEST JORDAN, UT. 84088-5642
PHONE 801-280-2400 FAX 801-280-2493

2/14/14

RKH

NOTES | REVISIONS

10 OF 15

DW.2009.WLS-05	
LETTER	PART
A	RECEIVER COVER
B	#10 FHMS
C	UPPER COVER
D	LOCK COVER
E	FINGER PULL
F	GEAR TRAVEL
G	DOG
H	ROD #1
I	ROD #2
J	BOTTOM COVER
K	SLIDE BLOCK
L	3/16" X 3/8"-8/32" SHOULDER SCREW
M	DOOR LEAF INSERT
N	ROD #3
O	ROD #4
P	DOG PIN
Q	#8 FHMS
R	ACTUATOR BRACKET BOTTOM
S	CAM GEAR
T	ACTUATOR BRACKET TOP
U	HANDLE MOUNTING BLOCK
V	HANDLE
W	ROD #5
X	DOOR LEAF INSERT

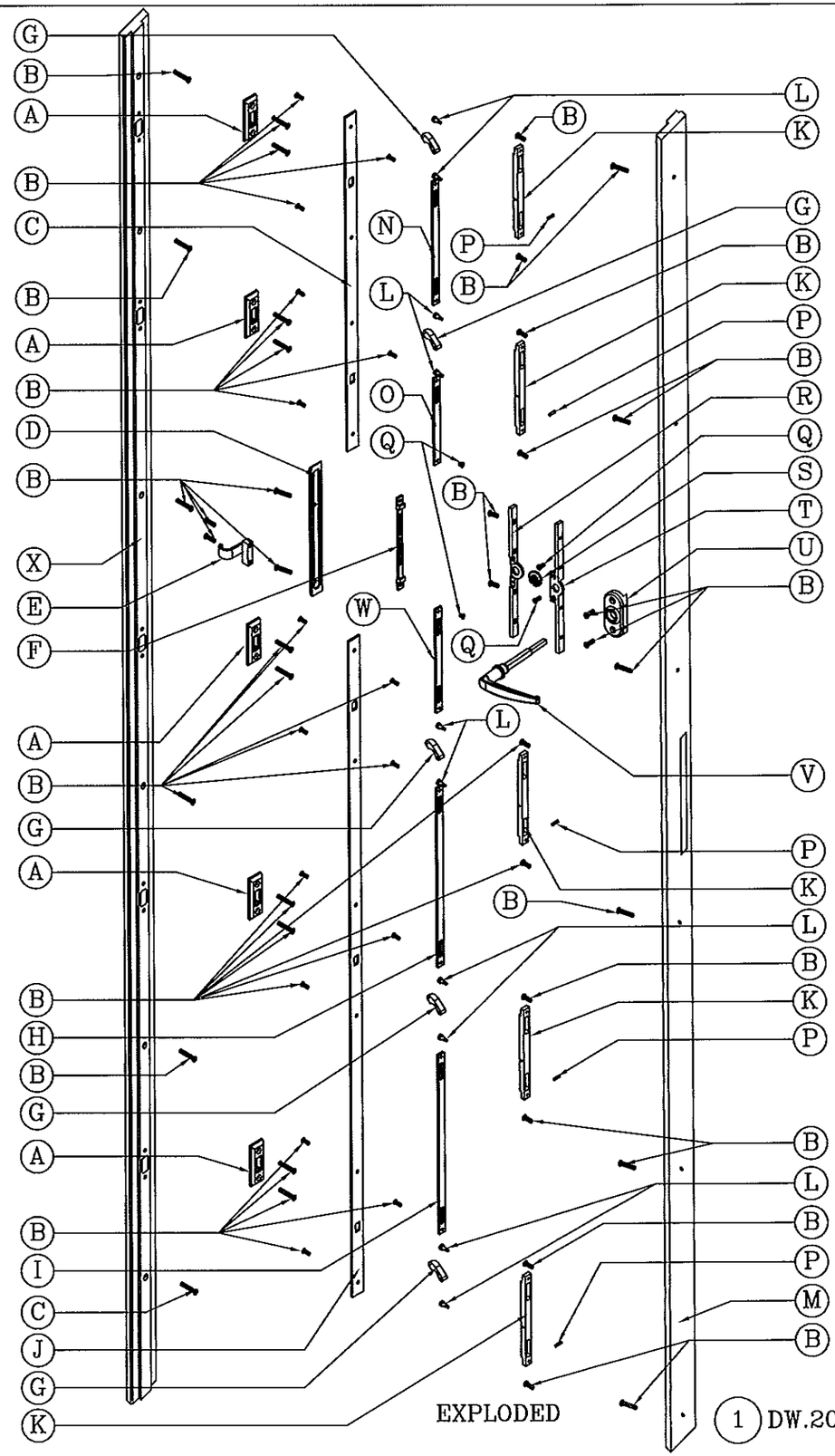

EXPLODED

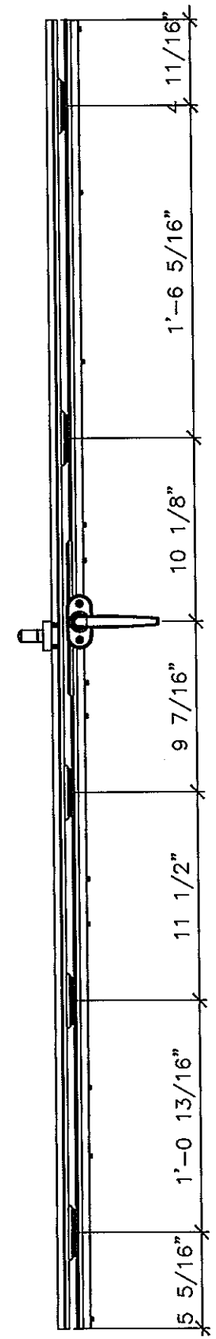

ELEVATION

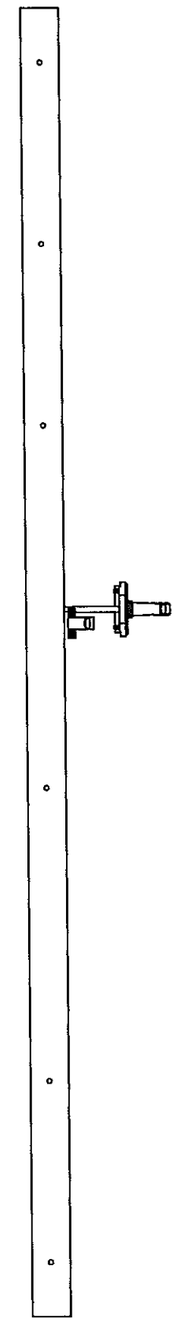

SIDE

1 DW.2009.WLS-05 HACI MULTI-POINT LEVER LOCK

Approved as complying with the Florida Building Code
Date 8/1/2014
NOA# 13-1028.10
Miami Dade Product Control
By

SCOTT WOLTERS
FLPE# 62354
WOLTERS ENGINEERING, INC.
(COA# 27194)
1725 SW 25TH AVENUE
FT. LAUDERDALE, FL 33312
JUN 04 2014

PALMETTO SERIES BRONZE DOORS

HISTORICAL ARTS & CASTING, INC.
5580 WEST BALLOT PARK RD., WEST JORDAN, UT. 84088-5642
PHONE 801-280-2400 FAX 801-280-2493

2/14/14

RKH

NOTES | REVISIONS

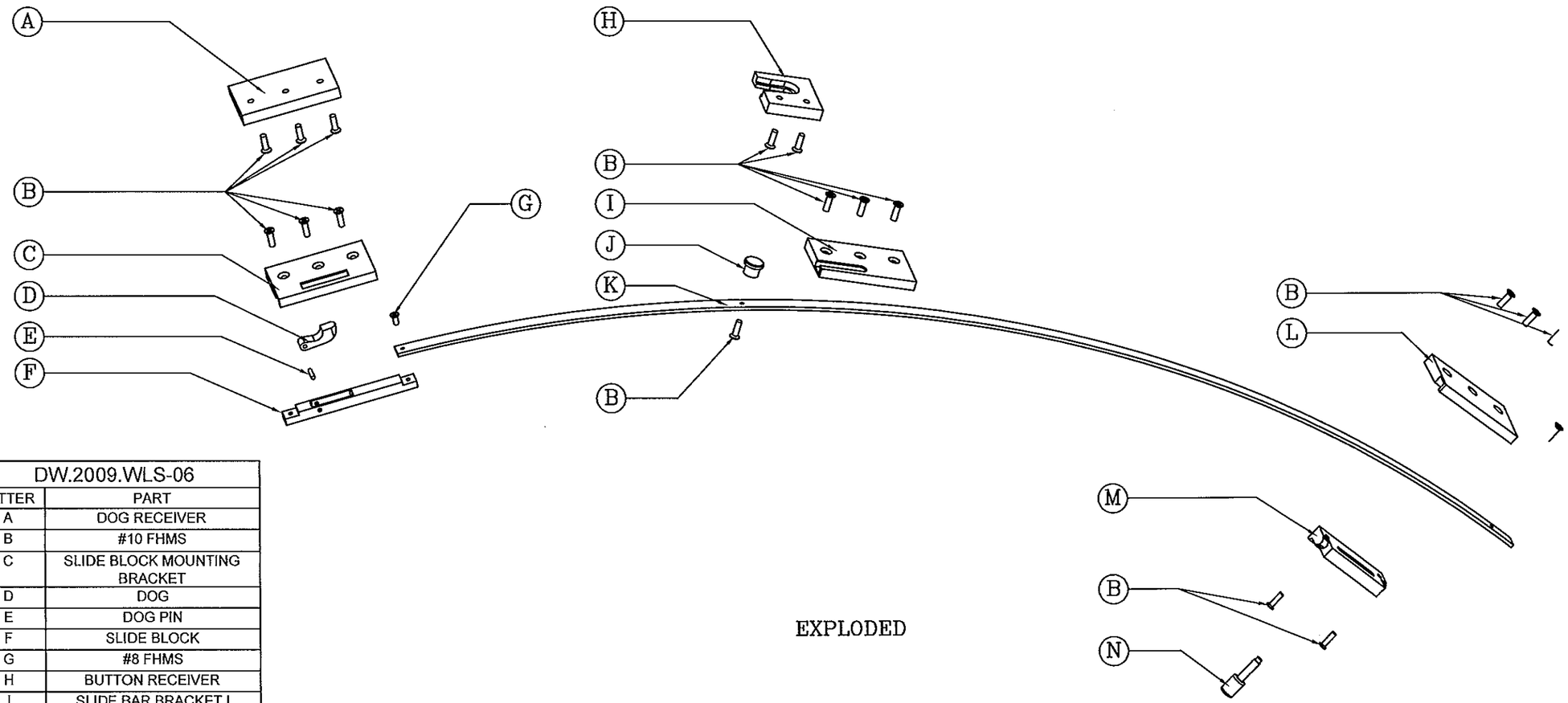

EXPLODED

DW.2009.WLS-06	
LETTER	PART
A	DOG RECEIVER
B	#10 FHMS
C	SLIDE BLOCK MOUNTING BRACKET
D	DOG
E	DOG PIN
F	SLIDE BLOCK
G	#8 FHMS
H	BUTTON RECEIVER
I	SLIDE BAR BRACKET I
J	BUTTON
K	SLIDE BAR
L	SLIDE BAR BRACKET II
M	HANDLE BRACKET
N	HANDLE

1 DW.2009.WLS-06 HACI MULTI-POINT LOCK

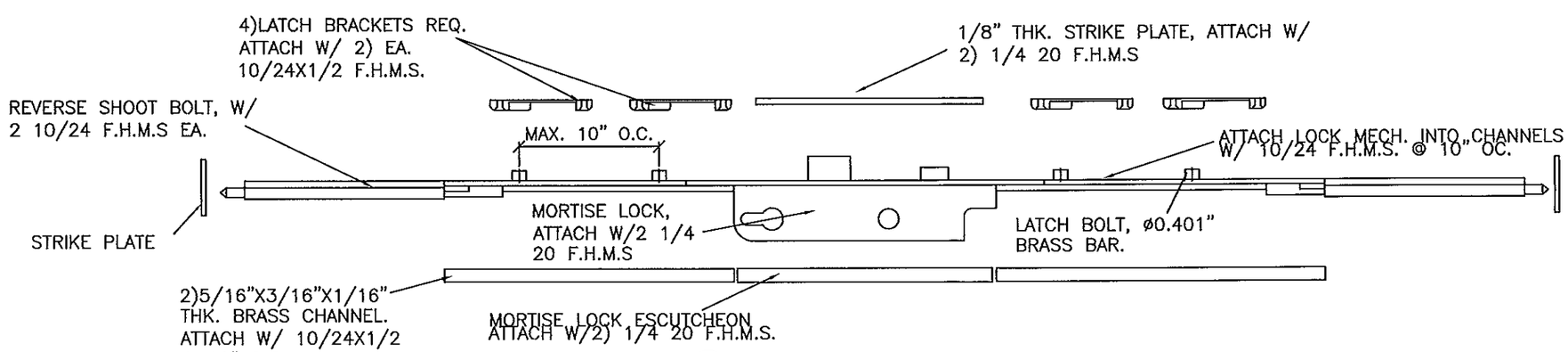

2 MORTISE LOCK ASSSEMBLY

Approved as complying with the
Florida Building Code
Date 07/17/2014
NOA# 13-1028.10
Miami-Dade Product Control
By

SCOTT WOLTERS
FLPE# 62354
WOLTERS ENGINEERING, INC.
(COA# 27194)
1725 SW 25TH AVENUE
FT. LAUDERDALE, FL 33312
JUN 04 2014

PALMETTO SERIES BRONZE DOORS

HISTORICAL ARTS & CASTING, INC.
5580 WEST BALLOY PARK RD., WEST JORDAN, UT. 84088-5642
PHONE 801-280-2400 FAX 801-280-2493

2/14/14

RKH

NOTES | REVISIONS

CREMON BOLT ASSEMBLY	
LETTER	PART
A	STRIKE
B	LATCH BRACKET
C	LOCKING LATCH W/ STOP
D	ROD GUIDE HEAVY
E	1/2" BRASS ROD THREADED
F	HANDLE
G	CREMONE BOX
H	FIXED HANDLE
I	DOG
J	LEVER BOLT
K	ROCKER ARM
L	COVER PLATE
M	CREMONE BOX SUPPORT PLATE

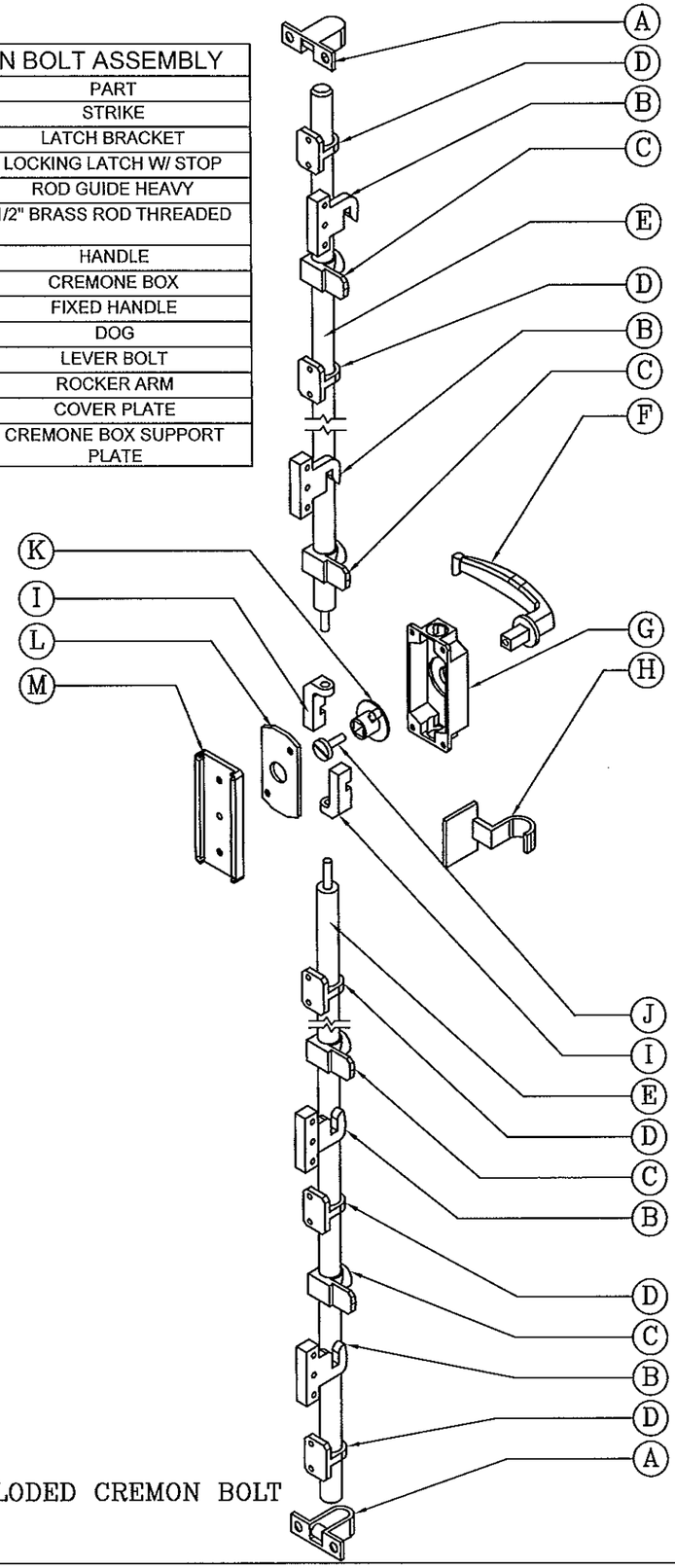

2 EXPLODED CREMON BOLT

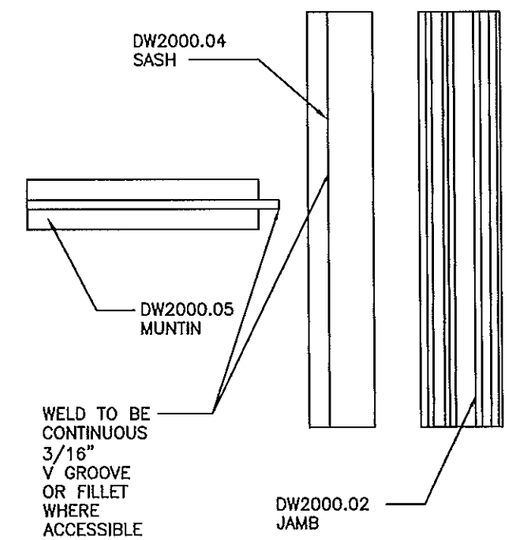

EXPLODED ELEVATION

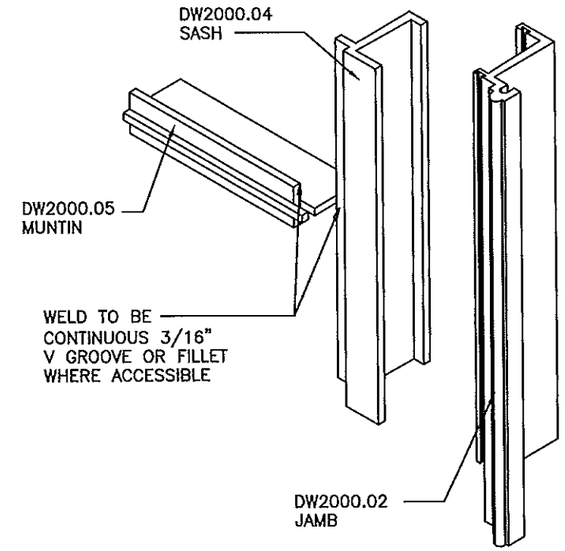

EXPLODED ISOMETRIC

3 LEAF MUNTIN (EXTERIOR VIEW)
EXTRUSIONS JOINTS

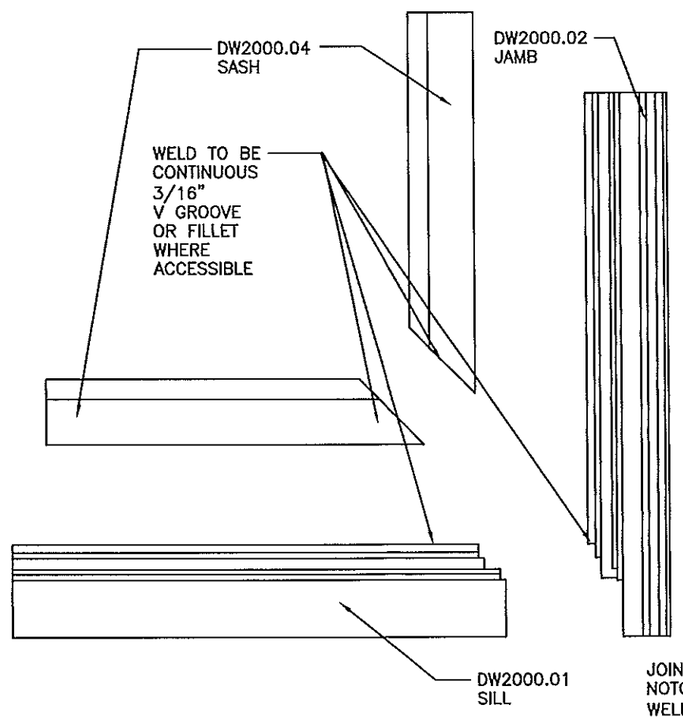

EXPLODED ELEVATION

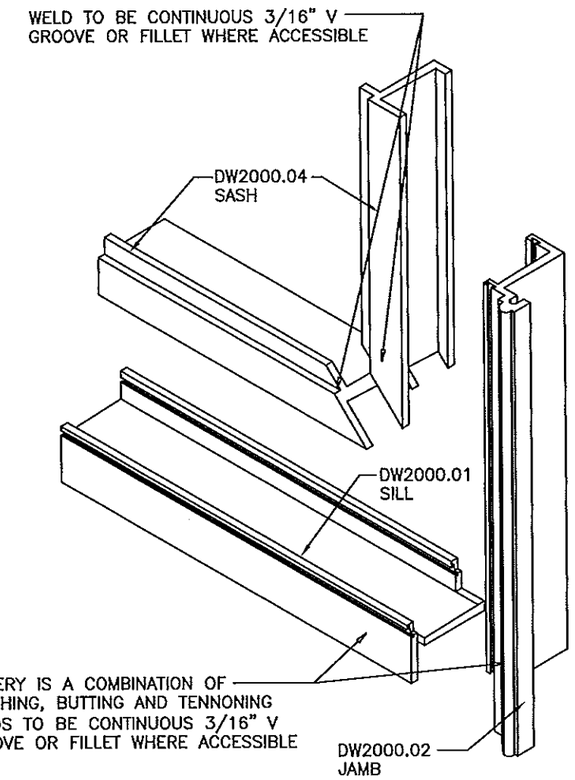

EXPLODED ISOMETRIC

1 BOTTOM RIGHT CORNER (EXTERIOR VIEW)
EXTRUSIONS JOINTS

Approved as complying with the
Florida Building Code
Date 6/11/2014
NOA# 13-1028.10
Miami Dade Product Control
By

SCOTT WOLTERS
FLPE# 62354
WOLTERS ENGINEERING, INC.
(COA# 27194)
1725 SW 25TH AVENUE
FT. LAUDERDALE, FL 33312
JUN 09 2014

PALMETTO SERIES BRONZE DOORS

HISTORICAL ARTS & CASTING, INC.
5580 WEST BALLOY PARK RD., WEST JORDAN, UT. 84088-5642
PHONE 801-280-2400 FAX 801-280-2493

2/14/14	RKH

NOTES REVISIONS

13 OF 15

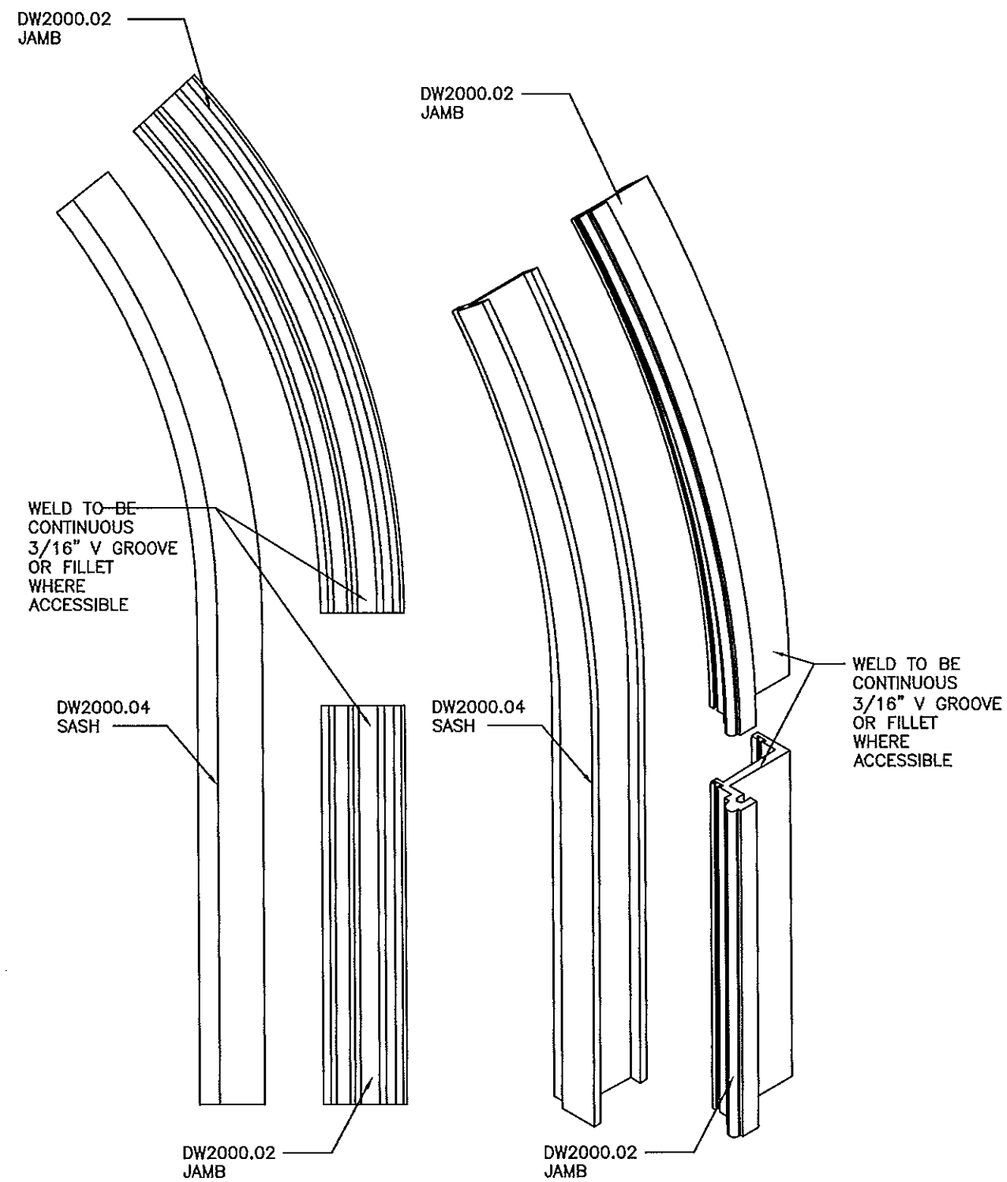

EXPLODED ELEVATION EXPLODED ISOMETRIC

2 ARCH TRANSITION (EXTERIOR VIEW)
EXTRUSIONS JOINTS

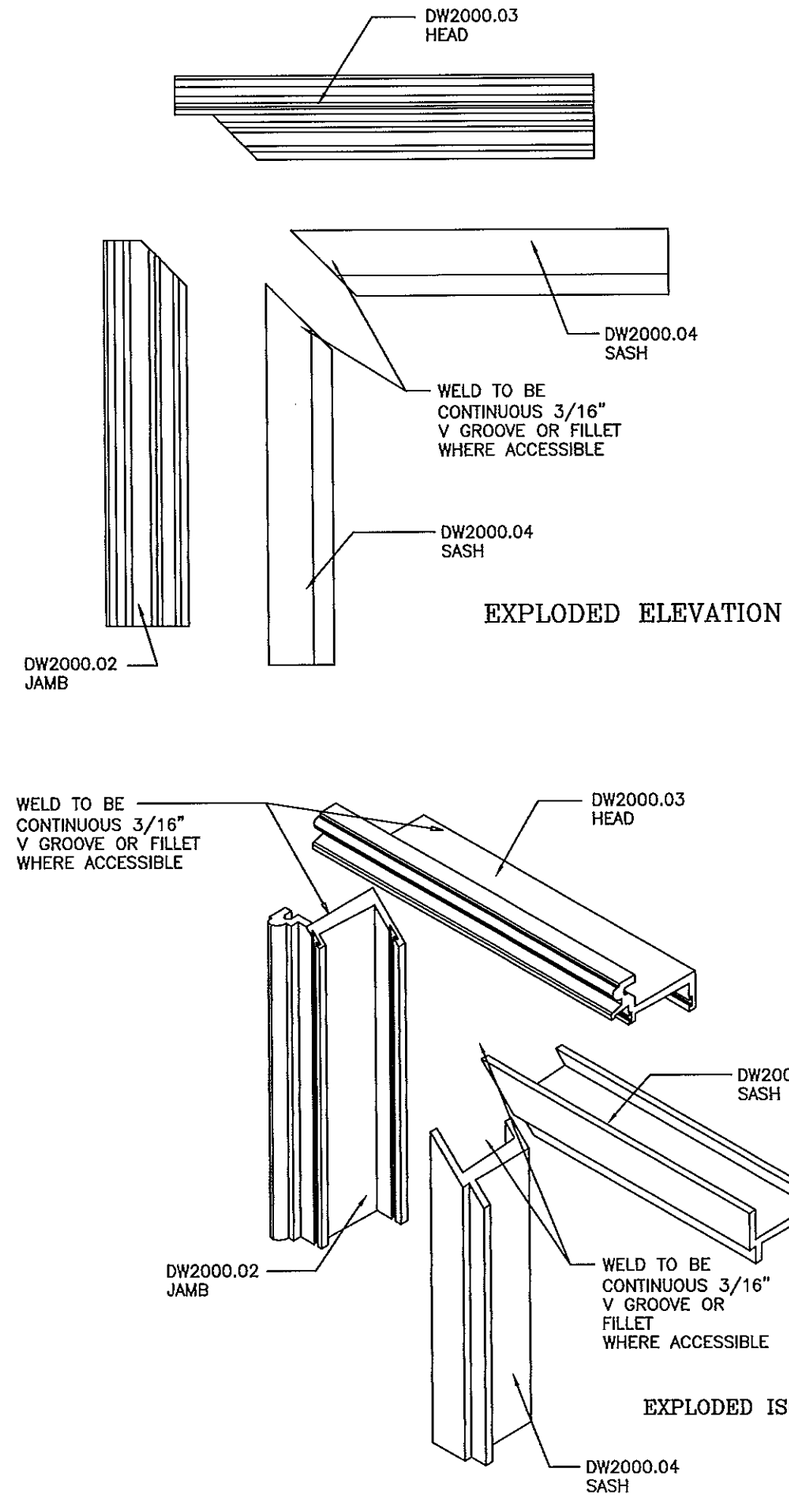

EXPLODED ELEVATION

EXPLODED ISOMETRIC

1 DOOR HEAD CORNER (EXTERIOR VIEW)
EXTRUSIONS JOINTS

Approved as complying with the
Florida Building Code
Date 04/24/2014
NOA# 13-1023.10
Miami Dade Product Control
By

SCOTT WOLTERS
FLPE# 62354
WOLTERS ENGINEERING, INC.
(COA# 27194)
1725 SW 25TH AVENUE
FT. LAUDERDALE, FL 33312

JUN 04 2014

PALMETTO SERIES BRONZE DOORS

HISTORICAL ARTS & CASTING, INC.
5580 WEST BALLOY PARK RD., WEST JORDAN, UT. 84088-5642
PHONE 801-280-2400 FAX 801-280-2493

2/14/14	RKH

NOTES REVISIONS

14 OF 15

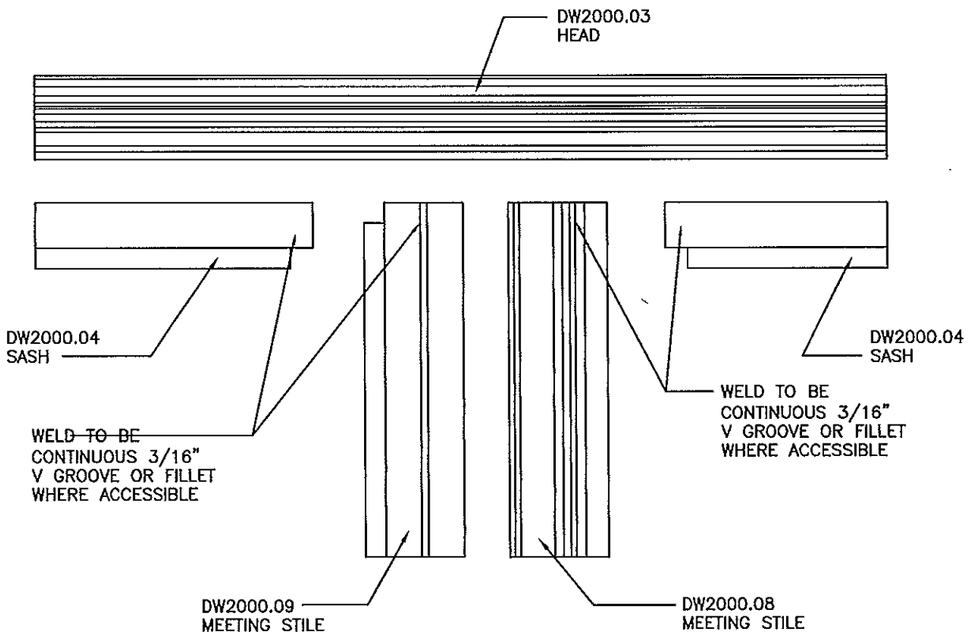

EXPLODED ELEVATION

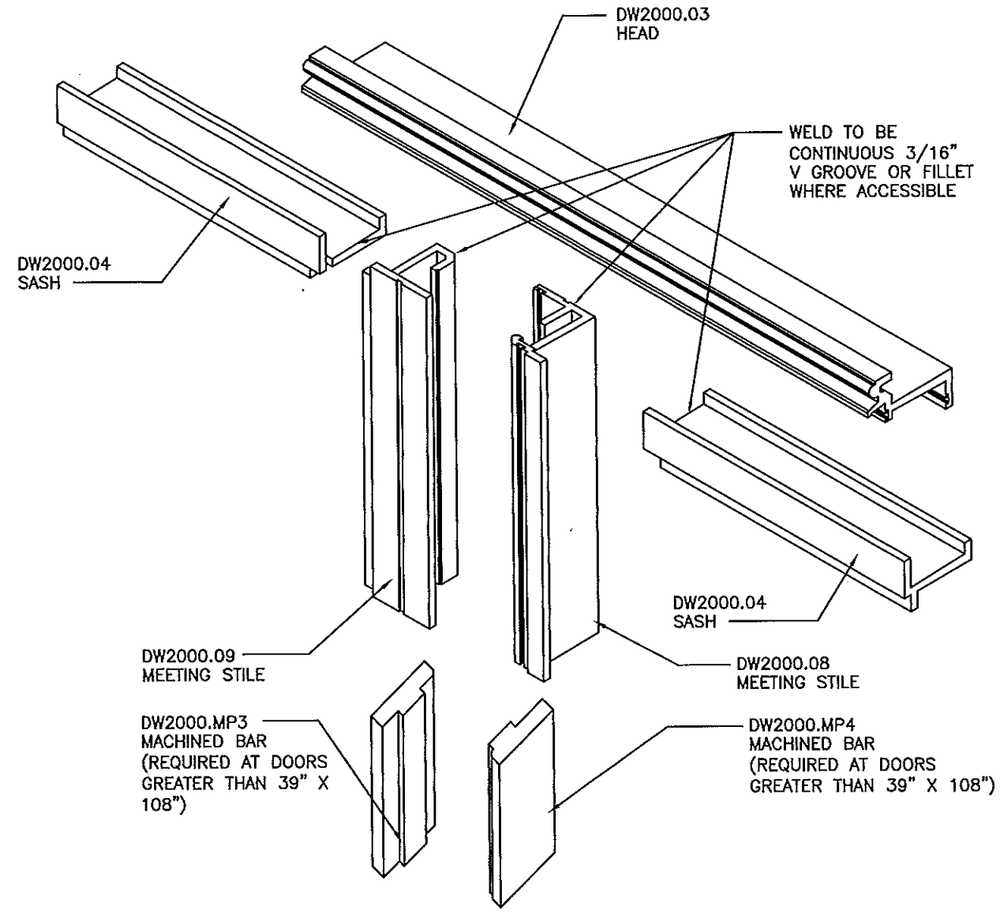

EXPLODED ISOMETRIC

1 DOOR HEAD (EXTERIOR VIEW)
EXTRUSIONS JOINTS

MOLDING OPTIONS (FOR ALL UNITS)

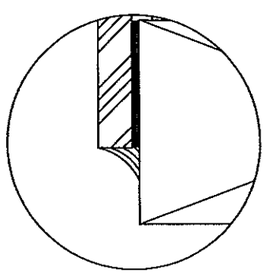

1 FLAT MOLDING

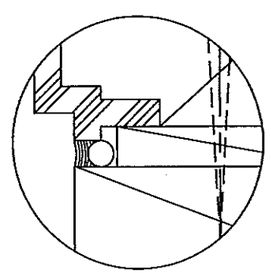

2 FLUSH MOLDING

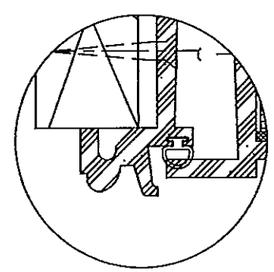

3 STANDARD BRICK MOLDING

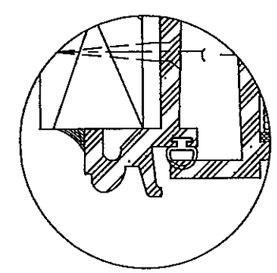

4 APPLIED BRICK MOLDING

LISTED IN NO PARTICULAR ORDER. SEALANT APPLIED BY OTHERS

Approved as complying with the
Florida Building Code
Date 07/17/2014
NOA# 13-1028.10
Miami Dade Product Control
By

SCOTT WOLTERS
FLPE# 62354
WOLTERS ENGINEERING, INC.
(COA# 27194)
1725 SW 25TH AVENUE
FT. LAUDERDALE, FL 33312
JUN 04 2014

PALMETTO SERIES BRONZE DOORS

HISTORICAL ARTS & CASTING, INC.
5580 WEST BALLOY PARK RD., WEST JORDAN, UT. 84088-5642
PHONE 801-280-2400 FAX 801-280-2493

2/14/14

RKH

NOTES | REVISIONS

15 OF 15