MIAMI-DADE COUNTY
PRODUCT CONTROL SECTION
11805 SW 26 Street, Room 208
Miami, Florida 33175-2474
T (786) 315-2590 F (786) 315-2599
www.miamidade.gov/economy

DEPARTMENT OF REGULATORY AND ECONOMIC RESOURCES (RER)
BOARD AND CODE ADMINISTRATION DIVISION

NOTICE OF ACCEPTANCE (NOA)

The Cookson Company
PO Box 23880
Phoenix, AZ 85063

SCOPE:

This NOA is being issued under the applicable rules and regulations governing the use of construction materials. The documentation submitted has been reviewed and accepted by Miami-Dade County RER-Product Control Section to be used in Miami Dade County and other areas where allowed by the Authority Having Jurisdiction (AHJ).

This NOA shall not be valid after the expiration date stated below. The Miami-Dade County Product Control Section (In Miami Dade County) and/or the AHJ (in areas other than Miami Dade County) reserve the right to have this product or material tested for quality assurance purposes. If this product or material fails to perform in the accepted manner, the manufacturer will incur the expense of such testing and the AHJ may immediately revoke, modify, or suspend the use of such product or material within their jurisdiction. RER reserves the right to revoke this acceptance, if it is determined by Miami-Dade County Product Control Section that this product or material fails to meet the requirements of the applicable building code.

This product is approved as described herein, and has been designed to comply with the Florida Building Code, including the High Velocity Hurricane Zone.

DESCRIPTION: # 45 Slat Steel Rolling Door up to 16'-0" Wide

APPROVAL DOCUMENT: Drawing No. **NPD-0050-02**, titled "Dade County Wind Door 16'-0" Wide #45 Slat", sheets 1 through 3 of 3, dated 10/19/1999, with revision 5 dated 11/26/2012, prepared by The Cookson Company, signed and sealed by Joseph H. Dixon, Jr., P.E., bearing the Miami-Dade County Product Control renewal stamp with the Notice of Acceptance number and expiration date by the Miami-Dade County Product Control Section.

MISSILE IMPACT RATING: Large and Small Missile Impact Resistant

LABELING: A permanent label with the manufacturer's name or logo, Gastonia, NC, model number, the positive and negative design pressure rating, indicate impact rated if applicable, installation instruction drawing reference number, approval number (NOA), the applicable test standards, and the statement reading 'Miami-Dade County Product Control Approved' is to be located on the door's side track, bottom angle, or inner surface of a panel.

RENEWAL of this NOA shall be considered after a renewal application has been filed and there has been no change in the applicable building code negatively affecting the performance of this product.

TERMINATION of this NOA will occur after the expiration date or if there has been a revision or change in the materials, use, and/or manufacture of the product or process. Misuse of this NOA as an endorsement of any product, for sales, advertising or any other purposes shall automatically terminate this NOA. Failure to comply with any section of this NOA shall be cause for termination and removal of NOA.

ADVERTISEMENT: The NOA number preceded by the words Miami-Dade County, Florida, and followed by the expiration date may be displayed in advertising literature. If any portion of the NOA is displayed, then it shall be done in its entirety.

INSPECTION: A copy of this entire NOA shall be provided to the user by the manufacturer or its distributors and shall be available for inspection at the job site at the request of the Building Official.

This NOA **renews NOA # 12-1219.06** and consists of this page 1 and evidence page E-1, as well as approval document mentioned above.

The submitted documentation was reviewed by **Carlos M. Utrera, P.E.**

MIAMI-DADE COUNTY APPROVED

01/23/2014

NOTICE OF ACCEPTANCE: EVIDENCE SUBMITTED

A. DRAWINGS

1. Drawing No. **NPD-0050-02**, titled "Dade County Wind Door 16'-0" Wide #45 Slat", sheets 1 through 3 of 3, dated 10/19/1999, with revision 5 dated 11/26/2012, prepared by The Cookson Company, signed and sealed by Joseph H. Dixon, Jr., P.E.

B. TESTS *"Submitted under NOA # 05-0815.11"*

1. Test Report No. **ETC-04-977-15284.0** on G60 and G40 galvanizing by ETC Laboratories dated 10/11/2004, signed and sealed by Joseph L. Doldan, P.E.

2. Test report on Large Missile Impact Test per FBC TAS 201-94, Cyclic Wind Pressure Test per FBC TAS 203-94 and Uniform Static Air Pressure Test per FBC TAS 202-94 of a "Steel Rolling Garage Door", prepared by Certified Testing Laboratories, Test Report No. **CTL-A468W**, dated 11/10/1999, signed and sealed by R. Patel, P.E.

C. CALCULATIONS *"Submitted under NOA # 05-0815.11"*

1. Calculations prepared by Joseph H. Dixon, Jr., P.E., dated 07/01/2005, sheets 1 to 5 and 9 and 10 with latest revised pages 6, 7 and 8, dated 09/08/2007, for 16 ft. wide door , signed and sealed by Joseph H. Dixon, Jr., P.E. on 08/06/2005 & 10/26/2007.

D. QUALITY ASSURANCE

1. Miami-Dade Department of Regulatory and Economic Resources (RER)

E. MATERIAL CERTIFICATIONS

1. Certified Testing Laboratories, Test Report # 99020 of test per ASTM E8, of .032" Steel, dated 10/20/1999, signed by R. Patel, P.E.

F. STATEMENTS

1. Statement letter of code conformance to 2010 FBC, dated 10/25/2013, signed and sealed by Joseph H. Dixon, Jr., P.E.
2. Statement letter of no financial interest, dated 10/25/2013, signed and sealed by Joseph H. Dixon, Jr., P.E.
3. Testing update letter issued by Architectural Testing, Inc., dated 10/08/2013 and signed by Michael D. Stremmel, P.E.

   "Submitted under NOA # 12-1219.06"

4. Testing contract letter issued by Architectural Testing, Inc. dated 03/18/2013 and signed by Michael D. Stremmel, P.E.

01/23/2014

Carlos M. Utrera, P.E.
Product Control Examiner
NOA No. 13-1105.02
Expiration Date: April 14, 2015
Approval Date: January 30, 2014

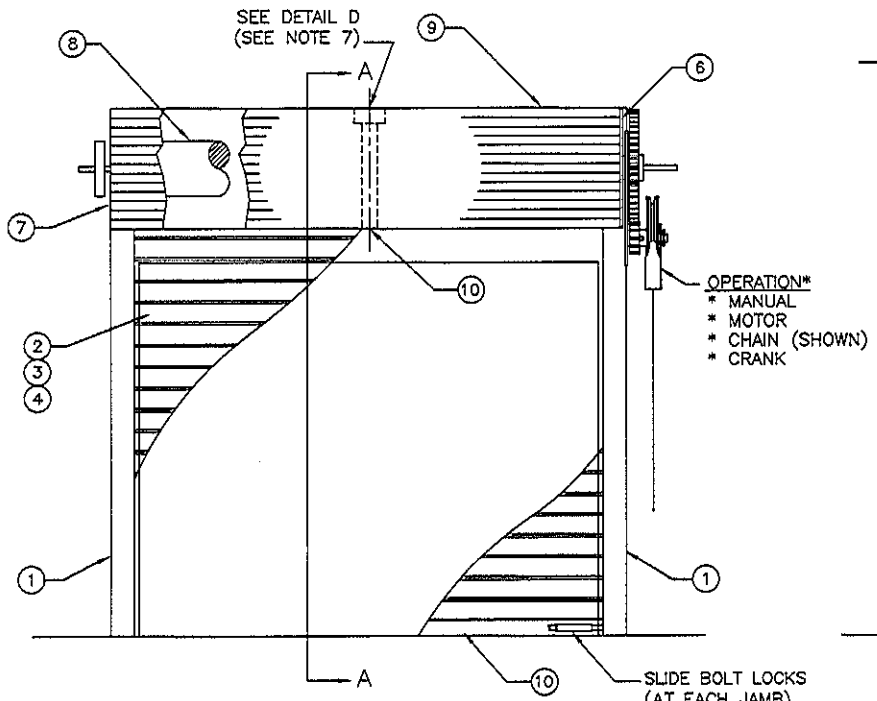

COIL-SIDE ELEVATION

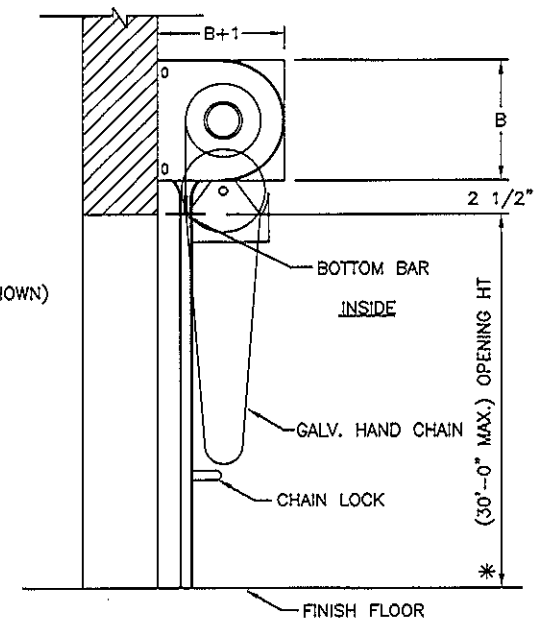

SECTION A-A

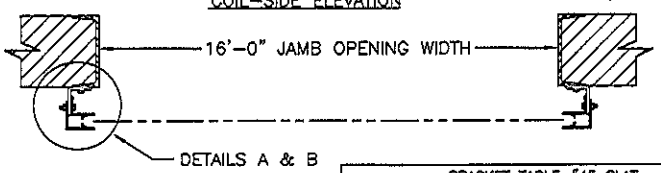

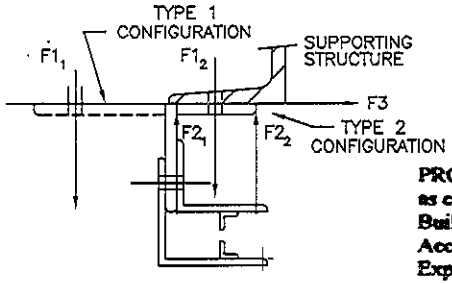

BRACKET TABLE #45 SLAT		
	CHAIN OPERATED	MOTOR OPERATED
DOOR HT UP TO (FT)	BRACKET SIZE "B"	BRACKET SIZE "B"
6	18"	16"
8	20"	16"
10	20"	18"
12	20"	18"
14	22"	20"
16	22"	20"
18	24"	22"
20	N/A	22"
26	N/A	24"
30	N/A	26"

TABLE OF CONTENTS

SHEET #	DESCRIPTION
1	GENERAL NOTES AND ELEVATION
2	CROSS SECTIONS AND DETAILS
3	FORCE TABLE, FASTENER SCHEDULE & PARTS LIST

NOTES:

1. THIS DRAWING HAS BEEN APPROVED AS COMPLYING WITH THE 2010 FLORIDA BUILDING CODE.
2. THIS DOOR HAS BEEN TESTED TO TAS 201,TAS 202,& TAS 203.
3. THE DOOR HAS A DESIGN PRESSURE OF 55lb/sq ft POS & 60lb/sq ft NEG.
4. ANCHOR BOLTS ARE HILTI KWIK BOLT 3 INSTALLED ON 3000 PSI CONCRETE.
5. WALL ANGLE BOLTS TO BE GRADE 5, CALCULATIONS MADE WITH THREADS IN SHEAR PLANE.
6. TYPE E60 OR HIGHER ELECTRODES TO BE USED FOR WELDED ATTACHMENT.
7. HOOD IS BOLTED TO BRKT. PLATE WITH #10 TEK SCREWS. INTERMEDIATE SUPPORT IS FURNISHED FOR DOORS OVER 14' WIDE.
8. CURTAIN IS FASTENED TO BARREL WITH 3/8" BOLTS.
9. STEEL PER ASTM A653, WITH A GALV COATING OF G60 (TAN), G60 (WHITE), G40 (GREY) AND G40 (POWDERCOATED) COATING AS TESTED IN THE ETC REPORT #ETC04013 DATED 10/11/04.
10. WINDLOCKS ARE CAST DUCTILE IRON, ON ALTERNATE SLATS.
11. WINDLOCKS/ENDLOCKS ARE ATTACHED TO SLATS WITH ø3/1 PLATED STEEL RIVETS.
12. WINDLOCK BAR MATERIAL: 1/2" X 1/2" X 1/8" STEEL ANGLES, ASTM A36, (DETAIL A).
13. ROLL UP MECHANISM NOT INCLUDED IN THIS APPROVAL. MUST BE CERTIFIED BY AN INDEPENDENT TESTING AGENCY.
14. SLATS ARE COLD ROLLED GALV STEEL, ASTM A653, SS, GRADE 50. TEST DOOR SAMPLE AT YIELD STRENGTH OF 52,200 PSI.

NO.	BY	DATE	REVISION
5	RG	11/26/12	CHANGED NOTE #1. UPDATED INSUL. NOTE
4	RG	1/4/08	CHANGED NOTE #9
3	RG	9/26/07	NOTE CHANGES
2	RG	7/18/05	TABLE UPDATES
	YL	10/19/99	ORIGINAL DRAWING

COOKSON ROLLING DOORS
2417 S. 50th AVENUE
PHOENIX, AZ 85043
800 TULIP DRIVE
GASTONIA, NC 28052

DADE COUNTY TEST DOOR 16'-0" +55/-60 PSF

ENG. NAME: JOSEPH H. DIXON JR.	COOKSON APPROVAL
DISCIPLINE: STRUCTURAL	BY:
FL REGISTRATION: 7768	DATE:
DRAWING NO. NPD-0050-02	SHEET 1 OF 3

PRODUCT RENEWED
as complying with the Florida
Building Code
Acceptance No 13-1105.02
Expiration Date 04/14/2015
By
Miami Dade Product Control

JOSEPH H. DIXON, JR.
LICENSE
No. 7768
STATE OF
FLORIDA
PROFESSIONAL ENGINEER

10/25/13

DADE COUNTY WIND DOOR 16'-0" WIDE #45 SLAT

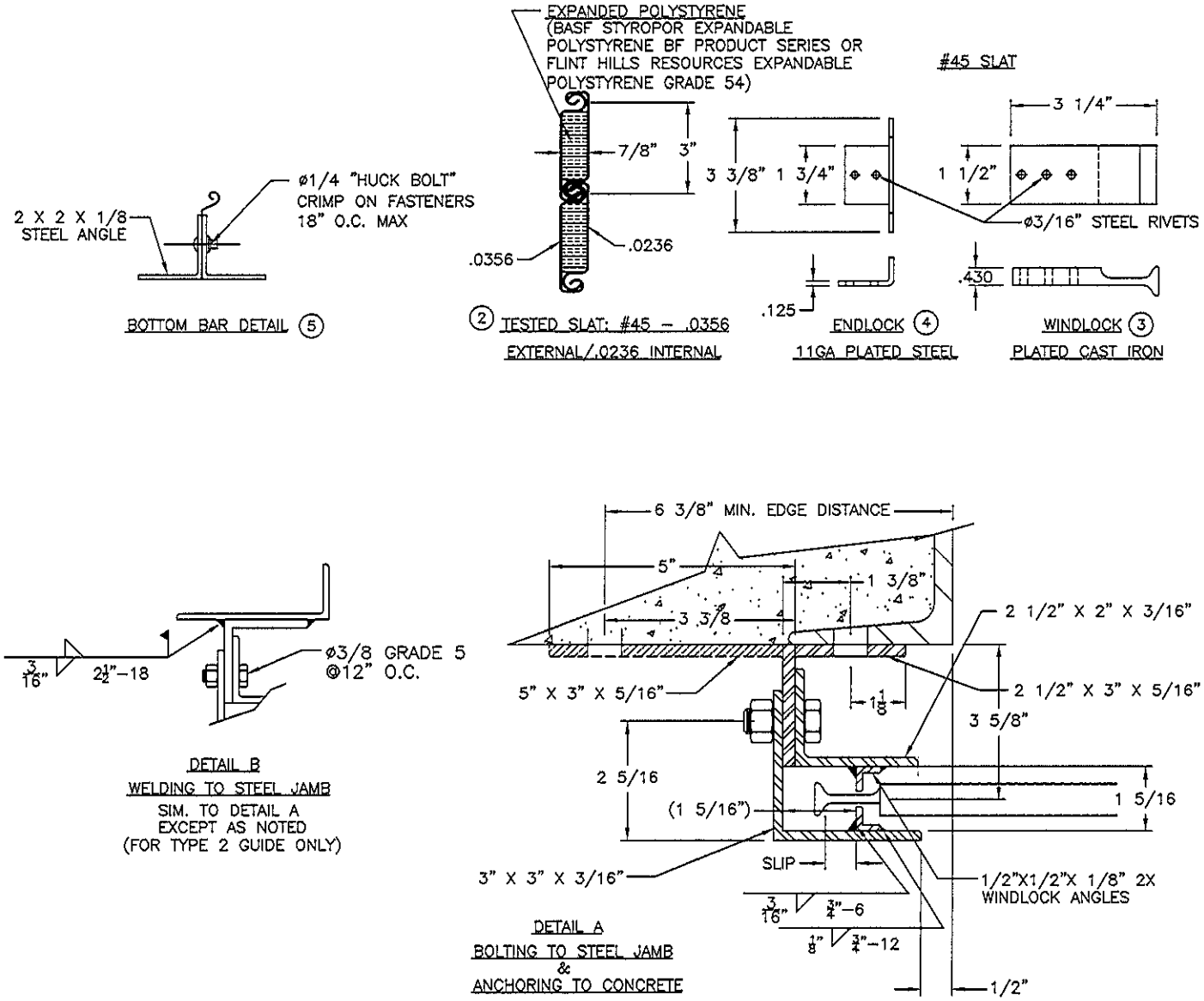

PRODUCT RENEWED
as complying with the Florida Building Code
Acceptance No 13-1105.02
Expiration Date 02/19/2015
By
Miami Dade Product Control

NO.	BY	DATE	REVISION
5	RG	11/26/12	CHANGED NOTE #1. UPDATED INSUL. NOTE
4	RG	1/4/08	CHANGED NOTE #9
3	RG	9/26/07	NOTE CHANGES
2	RG	7/18/05	TABLE UPDATES
	YL	10/19/99	ORIGINAL DRAWING

COOKSON® ROLLING DOORS
2417 S. 50th AVENUE
PHOENIX, AZ 85043
800 TULIP DRIVE
GASTONIA, NC 28052

DADE COUNTY TEST DOOR 16'–0" +55/–60 PSF

ENG. NAME: JOSEPH H. DIXON JR.	COOKSON APPROVAL
DISCIPLINE: STRUCTURAL	BY:
FL REGISTRATION: 7768	DATE:
DRAWING NO. NPD–0050–02	SHEET 2 OF 3

JOSEPH H. DIXON, JR. LICENSE No. 7768 STATE OF FLORIDA PROFESSIONAL ENGINEER

10/25/13

DADE COUNTY WIND DOOR 16'–0" WIDE #45 SLAT

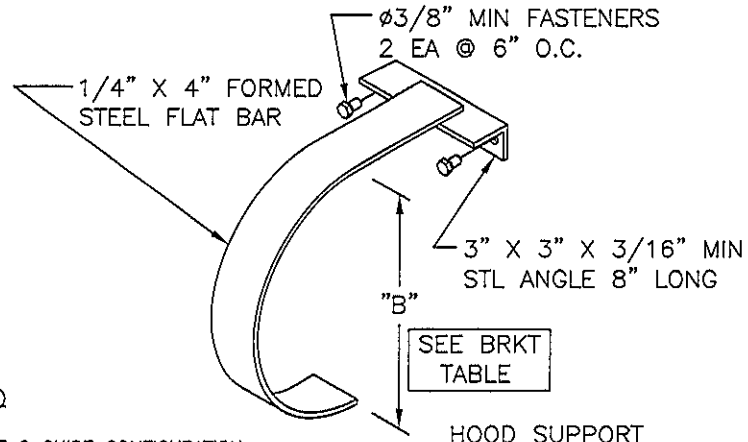

HOOD SUPPORT
DETAIL D

FORCE ON STRUCTURE (#/FT.)

OPENING WIDTH	TYPE 1 GUIDE CONFIGURATION						TYPE 2 GUIDE CONFIGURATION					
	POSITIVE (55 PSF)			NEGATIVE (60 PSF)			POSITIVE (55 PSF)			NEGATIVE (60 PSF)		
	F1	F2	F3	F1	F2	F3	F1	F2	F3	F1	F2	F3
UP TO 12'-0"	1269	937	38	362	725	187	456	124	38	244	606	187
12'-1"TO 16'-0"	1242	800	1343	1889	2371	1547	4807	4365	1343	4546	5028	1547

OPENING WIDTH	(1) WINDLOCK SPACING	SLIP	GUIDE ANGLE THICKNESS	WALL ANGLE THICKNESS	(3) CONCRETE ANCHOR	MIN EMBED-MENT	(2) WALL ANGLE BOLTS (GRADE 5)	GUIDE ANGLE ASSEMBLY BOLTS
UP TO 12'-0"	2	5/8"	3/16"	5/16"	1/2ø @ 14" O.C.	3 1/2"	1/2ø @ 18" O.C.	3/8ø @ 12" O.C.
12'-1"TO 16'-0"	2	5/8"	3/16"	5/16"	3/4ø @ 14" O.C.	4 3/4"	5/8ø @ 18" O.C.	3/8ø @ 12" O.C.

(1) WINDLOCK ON EVERY OTHER SLAT
(2) 1 3/8 O.D. X 1/8 THICK WASHER

(3) HILTI KWIK BOLT 3 – DO NOT USE FOR TYPE 2 INSTALLATION

PARTS LIST

ITEM NO.	DESCRIPTION	QTY.	MATERIAL
1	GUIDE (PAIR)	1	STEEL, ASTM A-36
2	GALVANIZED INSULATED SLAT	AS REQ'D	GALV STEEL, ASTM A-653 SS. GRADE 50 (NOTE 9)
3	WINDLOCK	AS REQ'D	DUCTILE CAST IRON, GRADE 65-45-12 ASTM A-536-72
4	ENDLOCK	AS REQ'D	C1018 STEEL, ASTM A-366
5	BOTTOM BAR	1	STEEL, ASTM A-36
6	DRIVE BRACKET ASSEMBLY	1	STEEL, ASTM A-36
7	TENSION BRACKET ASSEMBLY	1	STEEL, ASTM A-36
8	BARREL PIPE/COUNTER BALANCE		STEEL, ASTM A-108, A-229, A-53
9	GALVANIZED HOOD	1	GALVANIZED STEEL, ASTM A-653 (NOTE 9)
10	HOOD SUPPORT	AS REQ'D	STEEL, ASTM A-36

DADE COUNTY WIND DOOR 16'-0" WIDE #45 SLAT

PRODUCT RENEWED
as complying with the Florida Building Code
Acceptance No 13-1105.02
Expiration Date 04/14/2015
By _____
Miami Dade Product Control

NO.	BY	DATE	REVISION
5	RG	11/26/12	CHANGED NOTE #1. UPDATED INSUL. NOTE
4	RG	1/4/08	CHANGED NOTE #9
3	RG	9/26/07	NOTE CHANGES
2	RG	7/18/05	TABLE UPDATES
	YL	10/19/99	ORIGINAL DRAWING

COOKSON ROLLING DOORS
2417 S. 50th AVENUE
PHOENIX, AZ 85043
800 TULIP DRIVE
GASTONIA, NC 28052

DADE COUNTY TEST DOOR 16'-0" +55/-60 PSF

ENG. NAME: JOSEPH H. DIXON JR. | COOKSON APPROVAL
DISCIPLINE: STRUCTURAL | BY:
FL REGISTRATION: 7768 | DATE:

DRAWING NO. NPD-0050-02 | SHEET 3 OF 3

JOSEPH H. DIXON, JR.
LICENSE
No. 7768
STATE OF
FLORIDA
PROFESSIONAL ENGINEER

10/25/13