MIAMI-DADE COUNTY
DEPARTMENT OF REGULATORY AND ECONOMIC RESOURCES (RER)
BOARD AND CODE ADMINISTRATION DIVISION

MIAMI-DADE COUNTY
PRODUCT CONTROL SECTION
11805 SW 26 Street, Room 208
T (786) 315-2590 F (786) 315-2599
www.miamidade.gov/economy

NOTICE OF ACCEPTANCE (NOA)

Tischler und Sohn (USA) Ltd.
Six Suburban Avenue
Stamford, CT 06901

SCOPE:

This NOA is being issued under the applicable rules and regulations governing the use of construction materials. The documentation submitted has been reviewed and accepted by Miami-Dade County RER - Product Control Section to be used in Miami Dade County and other areas where allowed by the Authority Having Jurisdiction (AHJ).

This NOA shall not be valid after the expiration date stated below. The Miami-Dade County Product Control Section (In Miami Dade County) and/or the AHJ (in areas other than Miami Dade County) reserve the right to have this product or material tested for quality assurance purposes. If this product or material fails to perform in the accepted manner, the manufacturer will incur the expense of such testing and the AHJ may immediately revoke, modify, or suspend the use of such product or material within their jurisdiction. RER reserves the right to revoke this acceptance, if it is determined by Miami-Dade County Product Control Section that this product or material fails to meet the requirements of the applicable building code.

This product is approved as described herein, and has been designed to comply with the Florida Building Code, including the High Velocity Hurricane Zone.

DESCRIPTION: Series "Mahogany Impact" Inswing Wood Casement Window – L.M.I.

APPROVAL DOCUMENT: Drawing No. **1531**, titled "In–Swing Impact Wood Casement Window", sheets 1 through 14 of 14, dated 04/03/08, with revision **B1** dated 09/04/13, prepared by W.W. Schaefer Engineering & Consulting, P.A., signed and sealed by Warren W. Schaefer, P.E., bearing the Miami–Dade County Product Control Section Revision stamp with the Notice of Acceptance number and expiration date by the Miami–Dade County Product Control Section.

MISSILE IMPACT RATING: Large and Small Missile Impact Resistant

LABELING: Each unit shall bear a permanent label with the manufacturer's name or logo, city, state, model/series, and following statement: "Miami-Dade County Product Control Approved", unless otherwise noted herein.

RENEWAL of this NOA shall be considered after a renewal application has been filed and there has been no change in the applicable building code negatively affecting the performance of this product.

TERMINATION of this NOA will occur after the expiration date or if there has been a revision or change in the materials, use, and/or manufacture of the product or process. Misuse of this NOA as an endorsement of any product, for sales, advertising or any other purposes shall automatically terminate this NOA. Failure to comply with any section of this NOA shall be cause for termination and removal of NOA.

ADVERTISEMENT: The NOA number preceded by the words Miami-Dade County, Florida, and followed by the expiration date may be displayed in advertising literature. If any portion of the NOA is displayed, then it shall be done in its entirety.

INSPECTION: A copy of this entire NOA shall be provided to the user by the manufacturer or its distributors and shall be available for inspection at the job site at the request of the Building Official.

This NOA **revises and renews NOA# 11-1101.11** and consists of this page 1 and evidence pages E-1 and E-2, as well as approval document mentioned above.

The submitted documentation was reviewed by **Manuel Perez, P.E.**

MIAMI-DADE COUNTY APPROVED

12/19/13

Tischler und Sohn (USA) Ltd.

NOTICE OF ACCEPTANCE: EVIDENCE SUBMITTED

A. DRAWINGS

1. Manufacturer's die drawings and sections.
   (Submitted under previous NOA No. 08–0804.16)
2. Drawing No. **1531**, titled "In–Swing Impact Wood Casement Window", sheets 1 through 14 of 14, dated 04/03/08, with revision **B1** dated 09/04/13, prepared by W.W. Schaefer Engineering & Consulting, P.A., signed and sealed by Warren W. Schaefer, P.E.

B. TESTS

1. Test reports on: 1) Air Infiltration Test, per FBC, TAS 202-94
   2) Uniform Static Air Pressure Test, Loading per FBC TAS 202-94
   3) Water Resistance Test, per FBC, TAS 202-94
   4) Large Missile Impact Test per FBC, TAS 201-94
   5) Cyclic Wind Pressure Loading per FBC, TAS 203-94
   6) Forced Entry Test, per FBC 2411 3.2.1, TAS 202-94

   along with marked-up drawings and installation diagram of fixed and operable wood casement windows, prepared by Architectural Testing, Inc., Test Report No. **ATI-77324.01-109-18**, dated 06/30/08, and addendum letter dated 11/20/08, all signed and sealed by Michael D. Stremmel, P.E.
   (Submitted under NOA No. 08–0804.16)

C. CALCULATIONS

1. Anchor verification calculations and structural analysis, complying with FBC-2004 and FBC-2007, prepared by W.W. Schafer Engineering & Consulting, P.A., dated 07/28/08, and updated to **FBC-2010** on 10/28/13, signed and sealed by Warren W. Schafer, P.E.
2. Glazing complies with **ASTM E1300-04**

D. QUALITY ASSURANCE

1. Miami-Dade Department of Regulatory and Economic Resources (RER)

E. MATERIAL CERTIFICATIONS

1. Notice of Acceptance No. **12-1231.10** issued to **Eastman Chemical Company (MA)** for their "**Saflex Clear and Color Glass Interlayers**" dated 03/28/13, expiring on 05/21/16.
2. Notice of Acceptance No. **12-1231.08** issued to **Eastman Chemical Company (MA)** for their "**Saflex CP - Saflex and Saflex HP Composite Glass Interlayers with PET Core**" dated 03/28/13, expiring on 12/11/18.

Manuel Perez, P.E.
Product Control Examiner
NOA No. 13-1105.09
Expiration Date: January 08, 2019
Approval Date: December 26, 2013

F. STATEMENTS

1. Statement letter of conformance, and compliance with **FBC 2010**, issued by W. W. Schaefer Engineering & Consulting, P.A., dated 09/03/13, signed and sealed by Warren W. Schaefer, P.E.
2. Statement letter of independence and no financial interest, issued by W. W. Schaefer Engineering & Consulting, P.A., dated 09/04/13, signed and sealed by Warren W. Schaefer, P.E.
3. Distributor Agreement between Tischler und Sohn (USA), Ltd., Connecticut, USA, and Tischler/ Cornelius Korn, G.m.b.H., Wedel (Holstein) S. H., Germany, dated 04/13/09, signed by Tim Carpenter and Wilhelm Korn, respectively.
   (Submitted under previous NOA No. 11–1101.11)
4. Laboratory compliance letters for Test Report No. **ATI–77324.01–109–18**, issued by Architectural Testing, Inc., dated 07/01/08, all signed and sealed by Michael D. Stremmel, P.E.
   (Submitted under NOA No. 08–0804.16)

G. OTHERS

1. Notice of Acceptance No. **11–1101.11**, issued to Tischler und Sohn (USA), Ltd. for their Series "Mahogany Impact" Wood Inswing Casement Window – L.M.I., approved on 01/19/12 and expiring on 01/08/14.

Manuel Perez, P.E.
Product Control Examiner
NOA No. 13-1105.09
Expiration Date: January 08, 2019
Approval Date: December 26, 2013

GENERAL NOTES:

1. THESE WINDOW SYSTEMS HAVE BEEN TESTED, ANALYZED & APPROVED FOR DESIGN PRESSURES NOT TO EXCEED THOSE SHOWN IN THE "ALLOWABLE DESIGN PRESSURE TABLE(S).
2. OPENINGS, BUCKING & BUCKING FASTENERS MUST BE PROPERLY DESIGNED & INSTALLED TO TRANSFER WIND LOADS TO THE STRUCTURE.
3. ALL HARDWARE & FASTENERS SHALL BE IN ACCORDANCE WITH THESE DRAWINGS & SHALL NOT VARY UNLESS SPECIFICALLY MENTIONED ON THE DRAWINGS. SPECIFIED ANCHOR EMBED TO BASE MATERIAL SHALL BE BEYOND WALL FINISH OR STUCCO.
4. THE DETAILS & SPECIFICATIONS SHOWN HEREIN REPRESENT THE PRODUCTS TESTED & PROPOSED FOR WATER, AIR, IMPACT, CYCLIC & UNIFORM STATIC AIR PRESSURE TESTING IN CONFORMANCE WITH THE FLORIDA BUILDING CODE PROTOCALS TAS-201, 202 & 203 FOR LARGE MISSILE IMPACT WINDOWS.
5. THESE WINDOW SYSTEMS HAVE BEEN DESIGNED IN ACCORDANCE WITH AND MEET THE REQUIREMENTS OF THE FLORIDA BUILDING CODE (FBC) INCLUDING HIGH VELOCITY HURRICANE ZONES (HVHZ).
6. IMPACT SHUTTERS ARE NOT REQUIRED WITH THESE WINDOWS.
7. ALL ANCHORS SECURING WINDOW FRAME TO PRESSURE TREATED BUCKS OR WOOD FRAMING SHALL BE CAPABLE OF RESISTING CORROSION CAUSED BY THE PRESSURE TREATING CHEMICALS IN THE WOOD.
8. DETERMINE THE POSITIVE & NEGATIVE DESIGN LOADS TO USE WHEN REFERENCING THESE DOCUMENTS IN ACCORDANCE WITH THE GOVERNING CODE AND GOVERNING WIND VELOCITY. FOR WIND LOAD CALCULATIONS IN ACCORDANCE WITH THE FLORIDA BUILDING CODE, A DIRECTIONALITY FACTOR OF Kd = 0.85 MAY BE APPLIED PER THE ASCE 7 STANDARD.
9. NO INCREASE IN ALLOWABLE STRESS HAS BEEN USED IN THE CERTIFICATION OF THIS PRODUCT. WIND LOAD DURATION FACTOR Cd = 1.6 WAS USED FOR WOOD SCREW ANALYSIS ONLY.
10. MATERIALS, INCLUDING BUT NOT LIMITED TO STEEL SCREWS, THAT COME INTO CONTACT WITH OTHER DISSIMILAR MATERIALS SHALL MEET THE REQUIREMENTS OF FLORIDA BUILDING CODE CHAPTER 20.
11. ALL WOOD MEMBERS OF WINDOWS THAT MAY POSSIBLY COME INTO CONTACT WITH MASONRY OR CONCRETE SUBSTRATES, ARE SUBJECT TO MOISTURE &/OR ARE SUBJECT TO THE OUTSIDE ENVIRONMENT SHALL BE OF AN APPROVED DURABLE SPECIES OR BE TREATED IN AN APPROVED METHOD WITH AN APPROVED PRESERVATIVE PER FBC SECTION 2326.

CORNER CONSTRUCTION:

RECTANGULAR FRAME CORNERS: MORTISE & TENON CONSTRUCTION JOINED & GLUED WITH PONAL SUPER 3 WOOD GLUE OR EQUIVALENT.
ARCHED FRAME CORNERS: ARCHED FRAME BUTTED TO STRAIGHT FRAME, JOINED WITH ONE(1) NO.14 X 3" WOOD SCREW, & GLUED WITH PONAL SUPER 3 WOOD GLUE OR EQUIVALENT.
HALF ROUND FRAME CORNERS: FINGER JOINT CONSTRUCTION JOINED & GLUED WITH PONAL SUPER 3 WOOD GLUE OR EQUIVALENT.
RECTANGULAR SASH CORNERS: MORTISE & TENON CONSTRUCTION JOINED & GLUED WITH PONAL SUPER 3 WOOD GLUE OR EQUIVALENT.
ARCHED SASH CORNERS: ARCHED SASH BUTTED TO STRAIGHT SASH, JOINED WITH ONE(1) NO.14 X 3" WOOD SCREW, & GLUED WITH PONAL SUPER 3 WOOD GLUE OR EQUIVALENT.
HALF ROUND SASH CORNERS: FINGER JOINT CONSTRUCTION JOINED & GLUED WITH PONAL SUPER 3 WOOD GLUE OR EQUIVALENT.

FRAME ANCHOR REQUIREMENTS TABLE

OPENING TYPE (SUBSTRATE)	FRAME/CLIP/BRACKET TO OPENING FASTENER TYPE	MINIMUM EMBED	MINIMUM EDGE DIST.
FRAME SCREWS			
MIN. 2X4 WOOD FRAME OR BUCK (MIN. GR. 3 & G=0.55)	NO. 14 SMS/WOOD SCREW OR 1/4" BTI SCREW	1 1/4"	3/4"
MIN. 18 GA. 33 KSI METAL STUD	(2)1/4--14 SELF TAP/DRILLING SCREW	FULL	1/2"
MIN. 1/8" THK A36 STEEL	(2)1/4--14 SELF TAP/DRILLING SCREW	FULL	1/2"
MIN. 1/8" THK 6063-T5 ALUM.	(2)1/4--14 SELF TAP/DRILLING SCREW	FULL	1/2"
C--90 CMU/2500 PSI CONCRETE	(1) 1/4" CONCRETE SCREW	1 1/4"	2"
INSTALLATION CLIP SCREWS			
MIN. 2X6 WOOD FRAME OR BUCK (MIN. GR. 3 & G=0.55)	NO. 12 X 1 1/2" SMS	1 3/8"	3/4"
MIN. 18 GA. 33 KSI METAL STUD	(2)12-14 SELF TAP/DRILLING SCREW	FULL	1/2"
MIN. 1/8" THK A36 STEEL	(2)12-14 SELF TAP/DRILLING SCREW	FULL	1/2"
MIN. 1/8" THK 6063--T5 ALUM.	(2)12-14 SELF TAP/DRILLING SCREW	FULL	1/2"
C--90 CMU/2500 PSI CONCRETE	(1) 1/4" CONCRETE SCREW	1 1/4"	2"
BTI BRACKET & ANGLE CLIP SCREWS			
MIN. 2X6 WOOD FRAME OR BUCK (MIN. GR. 3 & G=0.55)	NO. 8 X 1 1/2" SMS	1 1/8"	3/4"
MIN. 18 GA. 33 KSI METAL STUD	(2) 8-18 SELF TAP/DRILLING SCREW	FULL	1/2"
MIN. 1/8" THK A36 STEEL	(2) 8-18 SELF TAP/DRILLING SCREW	FULL	1/2"
MIN. 1/8" THK 6063-T5 ALUM.	(2) 8-18 SELF TAP/DRILLING SCREW	FULL	1/2"

(1) CONCRETE SCREWS SHALL BE ELCO ULTRACONS, ELCO CRETE-FLEX OR HILTI KWIK-CON II (HARDENED STEEL OR S.S.).
(2) ALL SELF TAP/DRILLING SCREWS SHALL BE MIN. GR. 5

LOCK STRIKE REQUIREMENTS (TOP OF PANEL)

SASH WIDTH	QUANTITY PER PANEL
RECTANGULAR PANEL	
OVER 24"	2
LESS THAN 24"	1
ARCH TOP PANEL	
OVER 28"	3
15" TO 28"	2
LESS THAN 15"	1
ROUND TOP PANEL	
OVER 32"	4
20" TO 32"	3
12" TO 20"	2
LESS THAN 12"	1

LOCK STRIKE REQUIREMENTS (LOCK SIDE OF PANEL)

SASH HEIGHT	QUANTITY PER PANEL
ALL PANEL SHAPES	
OVER 77"	3
40" TO 77"	2
LESS THAN 40"	1

LOCK STRIKE REQUIREMENTS (BOTTOM OF PANEL)

SASH WIDTH	QUANTITY PER PANEL
ALL PANEL SHAPES	
OVER 32"	3
24" TO 32"	2
LESS THAN 24"	1

LOCK STRIKE REQUIREMENTS (HINGE SIDE OF TILT-TURN WINDOWS)

SASH HEIGHT	QUANTITY PER PANEL
ALL PANEL SHAPES	
OVER 79"	4
45" TO 79"	3
27" TO 45"	2
LESS THAN 27"	1

NOTE: WHEN WINDOW IS TILT- TURN, ONLY 2 HINGES ARE USED COMBINED WITH LOCK POINTS. WHEN WINDOW IS SWING ONLY, ONLY HINGES EXIST.

SASH WIDTH DIMENSIONS ARE APPROXIMATELY 2 1/2" LESS THAN THE FRAME WIDTH & SASH HEIGHT DIMENSIONS ARE APPROXIMATELY 3" LESS THAN THE FRAME HEIGHT

THE "SASH HEIGHT" IS CONSIDERED TO BE FULL SASH HEIGHT FOR RECTANGULAR UNITS OR DISTANCE FROM THE BASE OF SASH TO SASH SRINGLINE FOR SHAPED UNITS

HINGE REQUIREMENTS

SASH HEIGHT	QUANTITY PER PANEL
POT HINGES	
OVER 74"	5
51" TO 74"	4
27" TO 51"	3
LESS THAN 27"	2
SCREWED-IN HINGES	
OVER 74"	4
46" TO 74"	3
LESS THAN 46"	2
CONCEALED HINGES	
OVER 78"	5
54" TO 78"	4
29" TO 54"	3
LESS THAN 29"	2

HINGE REQUIREMENTS (TILT-TURN WINDOWS)

2 PER WINDOW
(ALL SIZES OF ALL WINDOWS)

ALLOWABLE DESIGN PRESSURE (SINGLE & DOUBLE WINDOWS)

MAX. FRAME HEIGHT (IN.)	MAX. FRAME WIDTH (IN.)	ALLOWABLE PRESSURE POSITIVE (PSF)	ALLOWABLE PRESSURE NEGATIVE (PSF)
SINGLE WINDOW			
100 3/4	51 1/8	70	70
76 11/16	35 15/16	70	(1) 85
DOUBLE WINDOW			
100 3/4	79 1/16	(2) 70	(2) 70
76 11/16"	71 13/16	70	(1) 85

(1) HIGHER PRESSURE OF --85 PSF IS ONLY APPLICABLE WHEN GLASS OPTION 2 & STANDARD SIZE MEETING STILES ARE USED
(2) WITH FULL SIZE SINGLE WINDOWS USING GLASS OPTION 4, ALLOWABLE PRESSURE MUST BE REDUCED TO +/-66 PSF. PRESSURE MAY BE INCREASED TO +/-70 PSF IF THE D.L.O. WIDTH IS DECREASED TO MAX. 39.5" OR THE D.L.O. HEIGHT IS DECREASED TO MAX. 87".

PRODUCT REVISED
as complying with the Florida Building Code
Acceptance No 12-1105.09
Expiration Date Jan. 8, 2019
By Manuel Perez
Miami Dade Product Control

WARREN W. SCHAEFER LICENSE NO. 44135 STATE OF FLORIDA PROFESSIONAL ENGINEER

THESE DRAWINGS ARE APPLICABLE ONLY TO THE PRODUCT SPECIFIED. THEY MAY NOT BE USED FOR THE ASSEMBLY AND/OR INSTALLATION OF ANY OTHER PRODUCT NOR MAY THEY BE USED FOR RATIONAL AND/OR LOCAL APPROVAL OF ANY PRODUCT NOT PRODUCED BY THE MANUFACTURER STATED ON THESE DRAWINGS.

DRAWN BY: W.R.M. | CHECKED BY: W.W.S.
PLOT: 1=24 | DATE: 04/03/08

NO.	REVISION DESCRIPTION	BY	DATE
A1	UPDATE TO CURENT STANDARDS	W.R.M.	10/25/11
B1	UPDATE GLASS DESCRIPTION	W.R.M.	09/04/13

DRAWING TITLE: IN-SWING IMPACT WOOD CASEMENT WINDOW

MANUFACTURER: TISCHLER UND SOHN (USA) LTD.
SIX SUBURBAN AVENUE
STAMFORD, CONNECTICUT
203-674-0600

CONSULTANTS: W. W. SCHAEFER ENGINEERING & CONSULTING, P.A. (CA 6809)
7480 150TH COURT NORTH
PALM BEACH GARDENS, FL 33418
PHONE: 561-744-3424

CERTIFICATION
SEP 04 2013
WARREN W. SCHAEFER P.E. NO. 44135 P.E.

DRAWING NO. 1531 | REV. B
SHEET NO. 1 OF 14

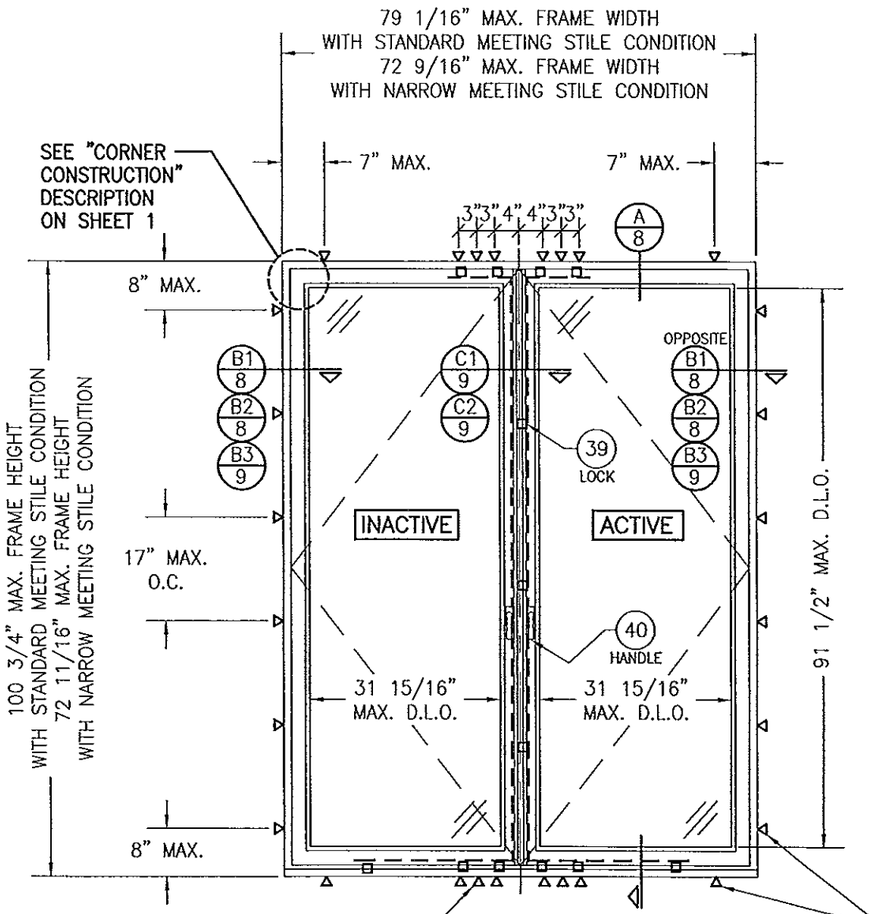

4 ANCHORS REQUIRED AT MEETING STILE ENDS WHEN WINDOW FRAME WIDTH IS 74" OR LESS OR WHEN FRAME HEIGHT IS 93" OR LESS; 6 ANCHORS REQUIRED OTHERWISE.

INTERIOR ELEVATION; DOUBLE RECTANGULAR CASEMENT WINDOWS (TURN ONLY CONDITION)

SCALE: 1/2" = 1'-0"

FRAME SHEAR SCREWS, INSTALLATION CLIPS, BTI BRACKETS OR ANGLE CLIPS WHERE SHOWN. SEE "FRAME ANCHOR REQUIREMENTS TABLE" ON SHEET 1 FOR REQUIREMENTS.

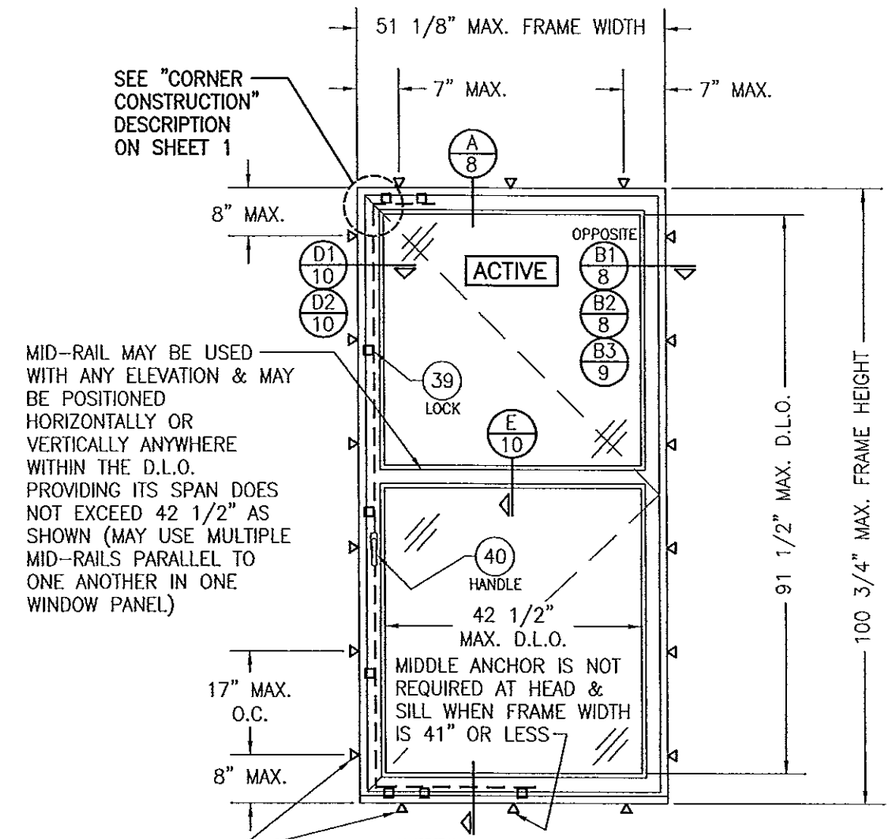

INTERIOR ELEVATION; SINGLE RECTANGULAR CASEMENT WINDOW (TURN ONLY CONDITION)

SCALE: 1/2" = 1'-0"

NOTE: WINDOW IS SHOWN WITH A MID-RAIL CONDITION. FULL LIGHT CONDITION ALSO APPLIES.

DUE TO HINGE CONDITION VARIATIONS, HINGES ARE NOT SHOWN IN ELEVATIONS, SEE SECTIONS & HINGE TABLES FOR HINGE REQUIREMENTS

PRODUCT REVISED
as complying with the Florida Building Code
Acceptance No 13-1105.09
Expiration Date Jan. 5, 2019
By Manuel Perez
Miami Dade Product Control

WARREN W. SCHAEFER LICENSE NO. 44135 STATE OF FLORIDA PROFESSIONAL ENGINEER

DRAWN BY: W.R.M.	CHECKED BY: W.W.S.
PLOT: 1=24	DATE: 04/03/08

NO.	REVISION DESCRIPTION	BY	DATE

DRAWING TITLE
IN-SWING IMPACT WOOD CASEMENT WINDOW

MANUFACTURER
TISCHLER UND SOHN (USA) LTD.
SIX SUBURBAN AVENUE
STAMFORD, CONNECTICUT
203-674-0600

CONSULTANTS
W. W. SCHAEFER ENGINEERING & CONSULTING, P.A. (CA 6809)
7480 150TH COURT NORTH
PALM BEACH GARDENS, FL 33418
PHONE: 561-744-3424

CERTIFICATION
SEP 04 2013
WARREN W. SCHAEFER, P.E.
P.E. NO. 44135

DRAWING NO. 1531
REV. B
SHEET NO. 2 OF 14

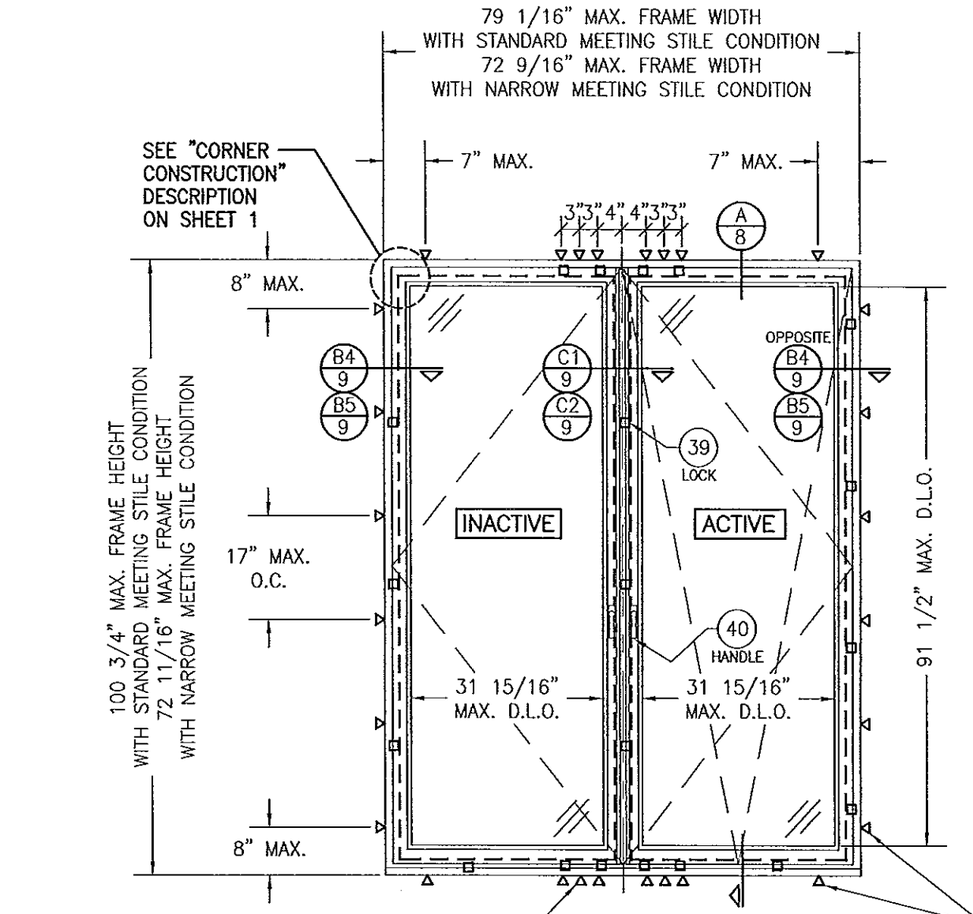

4 ANCHORS REQUIRED AT MEETING STILE ENDS WHEN WINDOW FRAME WIDTH IS 74" OR LESS OR WHEN FRAME HEIGHT IS 93" OR LESS; 6 ANCHORS REQUIRED OTHERWISE.

INTERIOR ELEVATION;
DOUBLE RECTANGULAR CASEMENT WINDOWS
(TURN & TILT CONDITION)
SCALE: 1/2" = 1'-0"

FRAME SHEAR SCREWS, INSTALLATION CLIPS, BTI BRACKETS OR ANGLE CLIPS WHERE SHOWN. SEE "FRAME ANCHOR REQUIREMENTS TABLE" ON SHEET 1 FOR REQUIREMENTS.

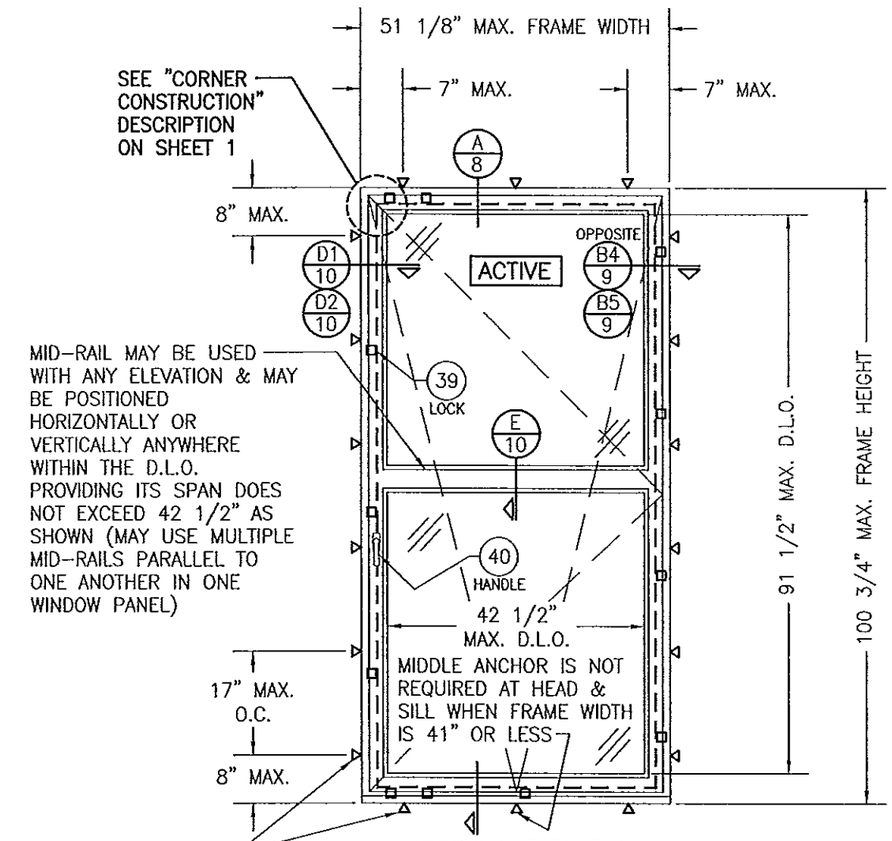

MID-RAIL MAY BE USED WITH ANY ELEVATION & MAY BE POSITIONED HORIZONTALLY OR VERTICALLY ANYWHERE WITHIN THE D.L.O. PROVIDING ITS SPAN DOES NOT EXCEED 42 1/2" AS SHOWN (MAY USE MULTIPLE MID-RAILS PARALLEL TO ONE ANOTHER IN ONE WINDOW PANEL)

INTERIOR ELEVATION;
SINGLE RECTANGULAR CASEMENT WINDOW
(TURN & TILT CONDITION)
SCALE: 1/2" = 1'-0"

NOTE: WINDOW IS SHOWN WITH A MID-RAIL CONDITION. FULL LIGHT CONDITION ALSO APPLIES.

DUE TO HINGE CONDITION VARIATIONS, HINGES ARE NOT SHOWN IN ELEVATIONS, SEE SECTIONS & HINGE TABLES FOR HINGE REQUIREMENTS

PRODUCT REVISED
as complying with the Florida Building Code
Acceptance No 13-1105.09
Expiration Date Jan. 6, 2019
By Manuel Perez
Miami Dade Product Control

WARREN W. SCHAEFER LICENSE NO 44135 STATE OF FLORIDA PROFESSIONAL ENGINEER

DRAWN BY: W.R.M.	CHECKED BY: W.W.S.
PLOT: 1=24	DATE: 04/03/08

NO.	REVISION DESCRIPTION	BY	DATE

DRAWING TITLE
IN-SWING IMPACT WOOD CASEMENT WINDOW

MANUFACTURER
TISCHLER UND SOHN (USA) LTD.
SIX SUBURBAN AVENUE
STAMFORD, CONNECTICUT
203-674-0600

CONSULTANTS
W. W. SCHAEFER ENGINEERING & CONSULTING, P.A. (CA 6809)
7480 150TH COURT NORTH
PALM BEACH GARDENS, FL 33418
PHONE: 561-744-3424

CERTIFICATION
SEP 04 2013
WARREN W. SCHAEFER, P.E.
P.E. NO. 44135

DRAWING NO. 1531
REV. B
SHEET NO. 3 OF 14

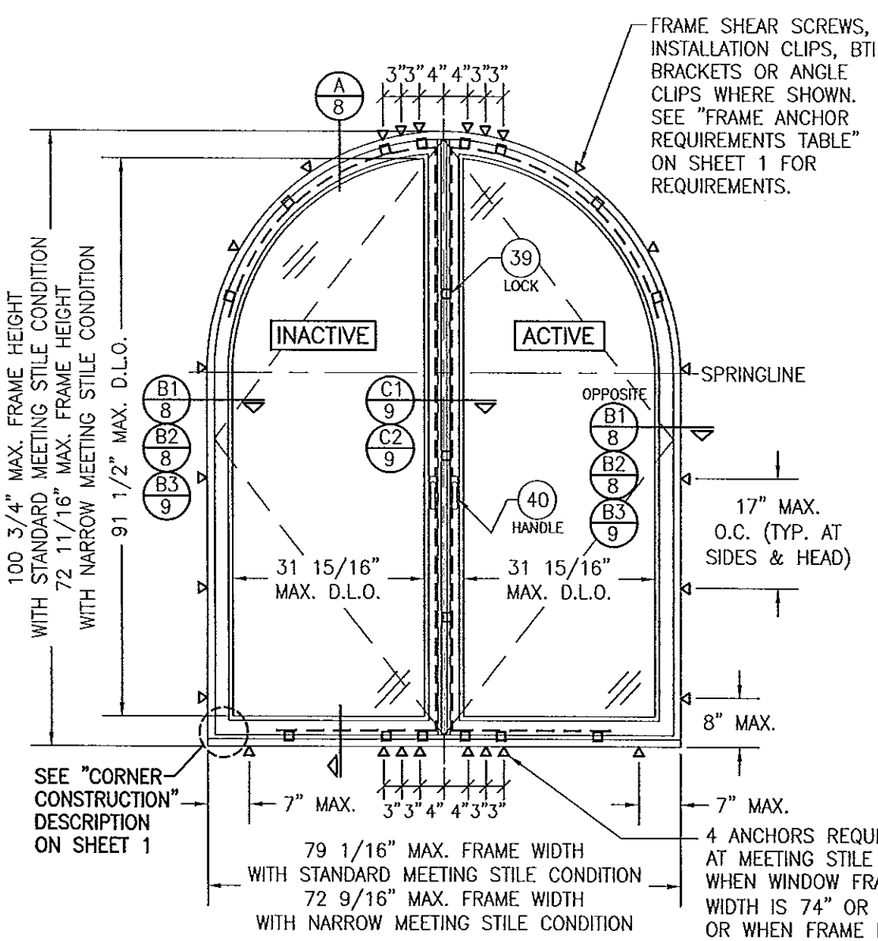

INTERIOR ELEVATION;
DOUBLE HALF ROUND CASEMENT WINDOWS
(TURN ONLY CONDITION)
SCALE: 1/2" = 1'-0"

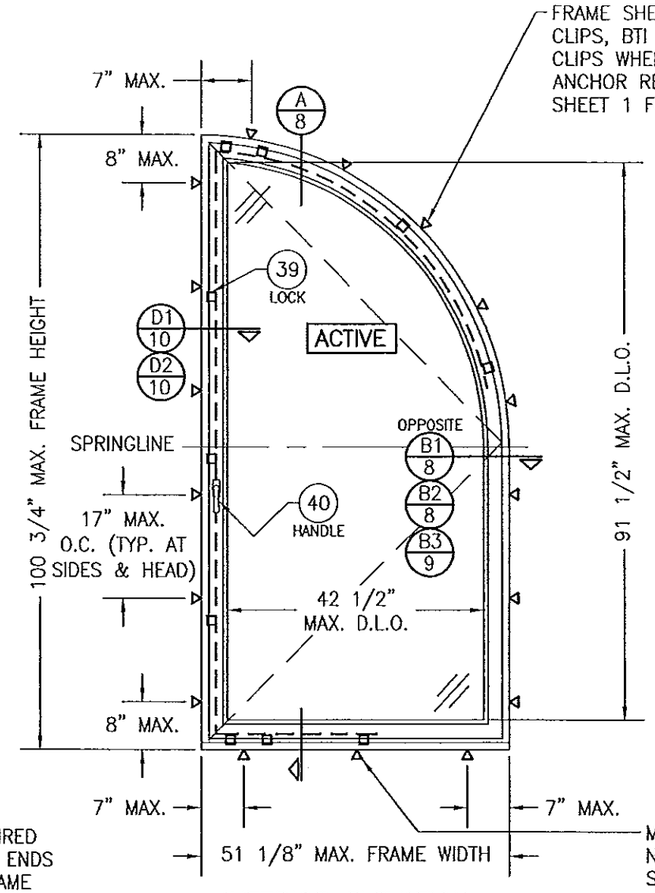

INTERIOR ELEVATION;
SINGLE QUARTER ROUND CASEMENT WINDOW
(TURN ONLY CONDITION)
SCALE: 1/2" = 1'-0"

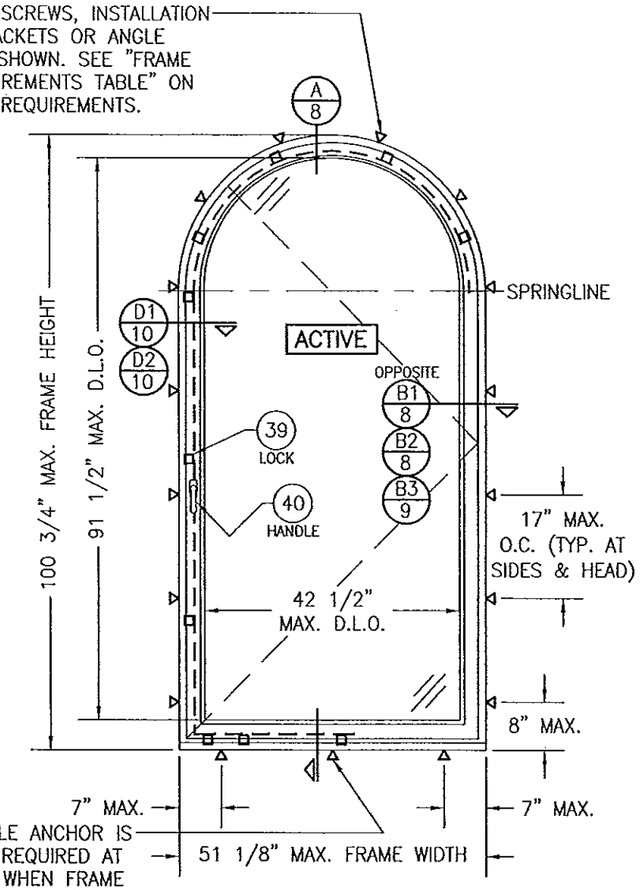

INTERIOR ELEVATION;
SINGLE HALF ROUND CASEMENT WINDOW
(TURN ONLY CONDITION)
SCALE: 1/2" = 1'-0"

APPROVED SHAPES

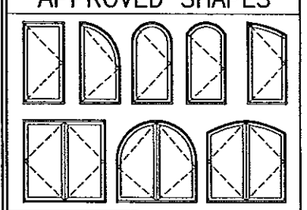

NOTES:

1. OTHER SHAPES MAY APPLY PROVIDING THEY ARE SIMILAR TO THOSE SHOWN & HAVE CORNER CONSTRUCTION AS DESCRIBED IN THIS DRAWING.
2. ALL SHAPED UNITS MUST FIT INSCRIBED INTO THE ALLOWABLE RECTANGULAR UNITS & BE GOVERNED BY THE ALLOWABLE PRESSURE OF THE RESPECTIVE RECTANGULAR UNIT.

ALLOWABLE DESIGN PRESSURE
SEE PRESSURE TABLE ON SHEET 1

ANCHOR NOTE: ANCHOR SPACING AT THE HEAD OF ALL TYPES OF SHAPED WINDOWS MUST EQUAL THAT SPECIFIED AT THE SIDES (17" MAX. O.C.)

DUE TO HINGE CONDITION VARIATIONS, HINGES ARE NOT SHOWN IN ELEVATIONS, SEE SECTIONS & HINGE TABLES FOR HINGE REQUIREMENTS

PRODUCT REVISED
as complying with the Florida Building Code
Acceptance No 13-1105.09
Expiration Date Jan. 8, 2019
By Manuel Perez
Miami-Dade Product Control

WARREN W. SCHAEFER LICENSE No 44135 STATE OF FLORIDA PROFESSIONAL ENGINEER

DRAWN BY: W.R.M.	CHECKED BY: W.W.S.
PLOT: 1=24	DATE: 04/03/08

NO.	REVISION DESCRIPTION	BY	DATE

DRAWING TITLE
IN-SWING IMPACT WOOD CASEMENT WINDOW

MANUFACTURER
TISCHLER UND SOHN (USA) LTD.
SIX SUBURBAN AVENUE
STAMFORD, CONNECTICUT
203-674-0600

CONSULTANTS
W. W. SCHAEFER ENGINEERING & CONSULTING, P.A. (CA 6809)
7480 150TH COURT NORTH
PALM BEACH GARDENS, FL 33418
PHONE: 561-744-3424

CERTIFICATION
SEP 04 2013
WARREN W. SCHAEFER, P.E.
P.E. NO. 44135

DRAWING NO. 1531
REV. B
SHEET NO. 4 OF 14

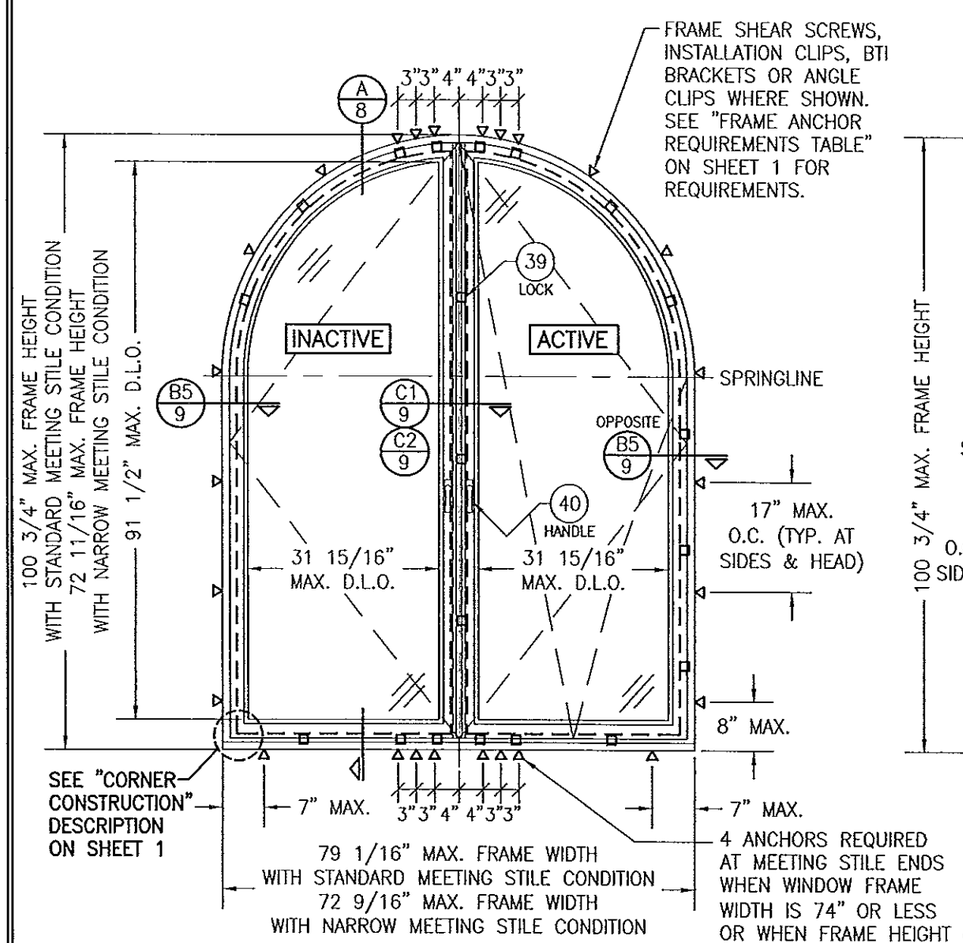

INTERIOR ELEVATION;
DOUBLE HALF ROUND CASEMENT WINDOWS
(TURN & TILT CONDITION)
SCALE: 1/2" = 1'-0"

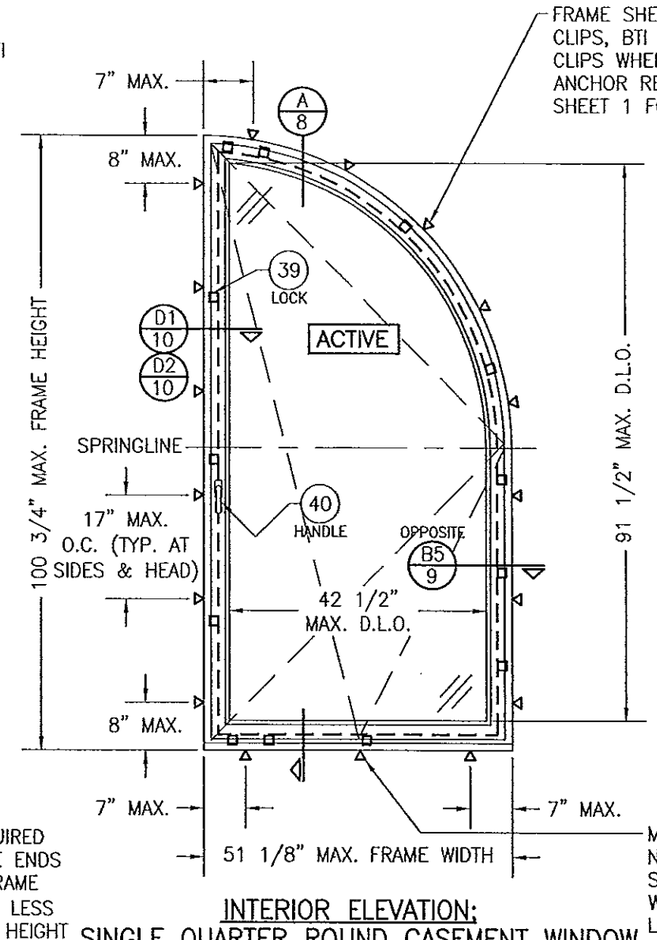

INTERIOR ELEVATION;
SINGLE QUARTER ROUND CASEMENT WINDOW
(TURN & TILT CONDITION)
SCALE: 1/2" = 1'-0"

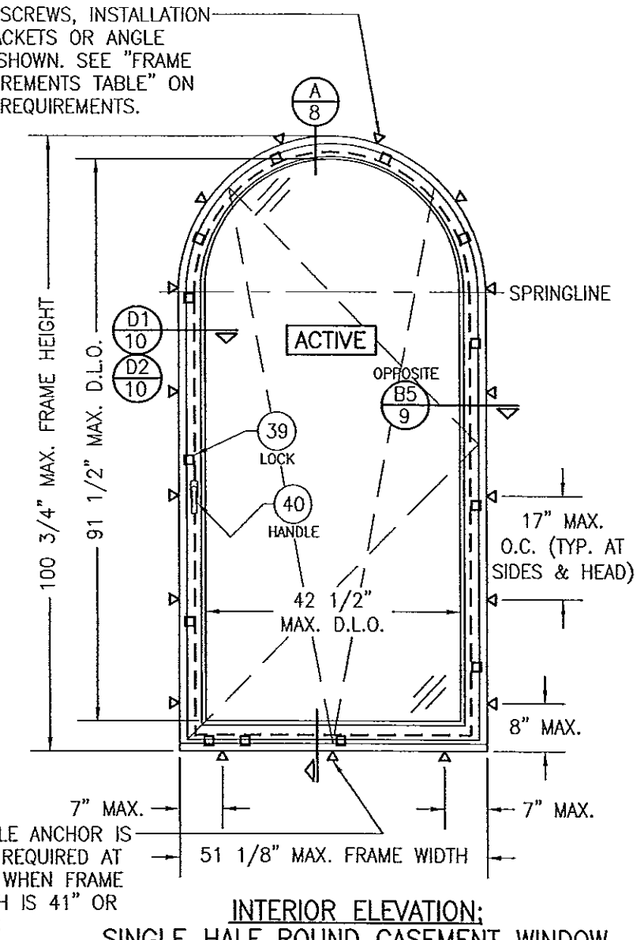

INTERIOR ELEVATION;
SINGLE HALF ROUND CASEMENT WINDOW
(TURN & TILT CONDITION)
SCALE: 1/2" = 1'-0"

APPROVED SHAPES

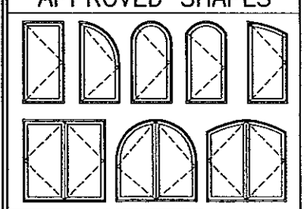

NOTES:

1. OTHER SHAPES MAY APPLY PROVIDING THEY ARE SIMILAR TO THOSE SHOWN & HAVE CORNER CONSTRUCTION AS DESCRIBED IN THIS DRAWING.
2. ALL SHAPED UNITS MUST FIT INSCRIBED INTO THE ALLOWABLE RECTANGULAR UNITS & BE GOVERNED BY THE ALLOWABLE PRESSURE OF THE RESPECTIVE RECTANGULAR UNIT.

ALLOWABLE DESIGN PRESSURE
SEE PRESSURE TABLE ON SHEET 1

ANCHOR NOTE: ANCHOR SPACING AT THE HEAD OF ALL TYPES OF SHAPED WINDOWS MUST EQUAL THAT SPECIFIED AT THE SIDES (17" MAX. O.C.)

DUE TO HINGE CONDITION VARIATIONS, HINGES ARE NOT SHOWN IN ELEVATIONS, SEE SECTIONS & HINGE TABLES FOR HINGE REQUIREMENTS

PRODUCT REVISED
as complying with the Florida
Building Code
Acceptance No 13-1105.09
Expiration Date Jan. 8, 2019
By Manuel Sera
Miami-Dade Product Control

WARREN W. SCHAEFER LICENSE No. 44135 STATE OF FLORIDA PROFESSIONAL ENGINEER

DRAWN BY: W.R.M.	CHECKED BY: W.W.S.
PLOT: 1=24	DATE: 04/03/08

NO.	REVISION DESCRIPTION	BY	DATE

DRAWING TITLE
IN-SWING IMPACT WOOD CASEMENT WINDOW

MANUFACTURER
TISCHLER UND SOHN (USA) LTD.
SIX SUBURBAN AVENUE
STAMFORD, CONNECTICUT
203-674-0600

CONSULTANTS
W. W. SCHAEFER ENGINEERING & CONSULTING, P.A. (CA 6809)
7480 150TH COURT NORTH
PALM BEACH GARDENS, FL 33418
PHONE: 561-744-3424

CERTIFICATION
SEP 04 2013
WARREN W. SCHAEFER, P.E.
P.E. NO. 44135

DRAWING NO.	REV.
1531	B

SHEET NO.
5 OF 14

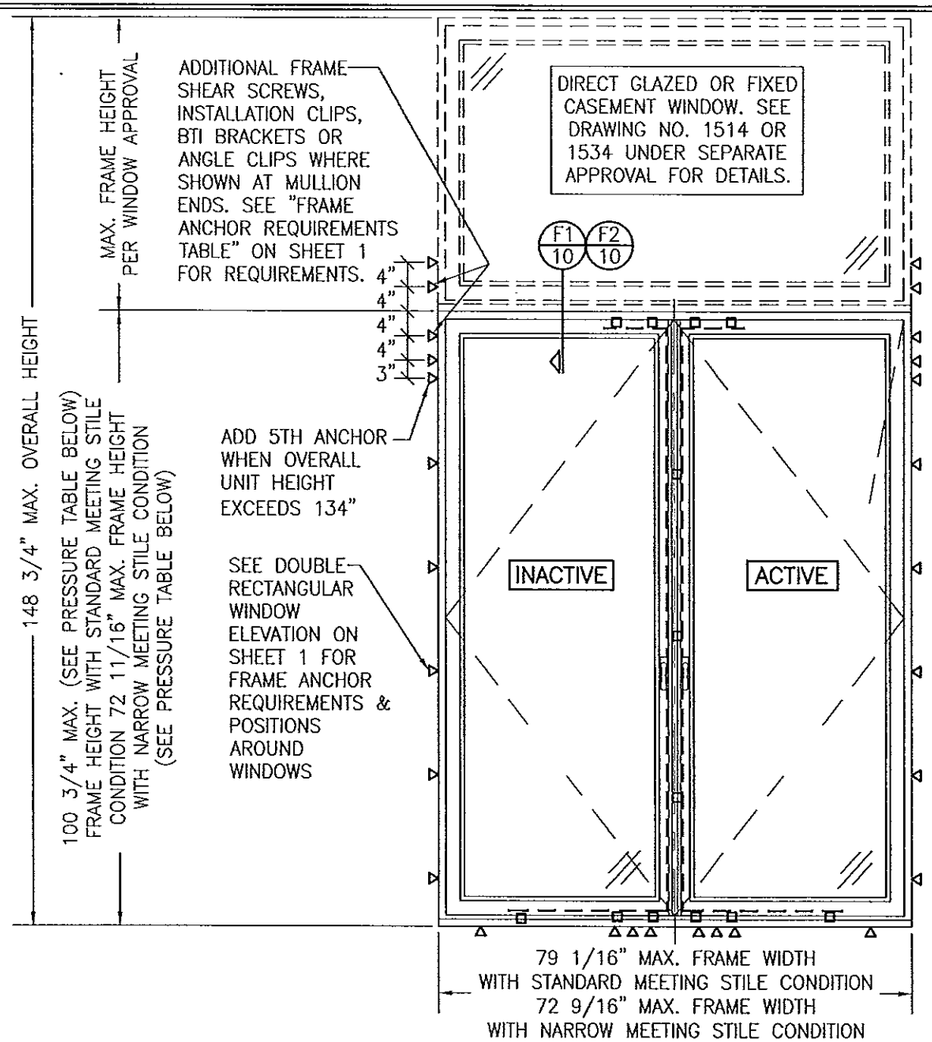

INTERIOR ELEVATION; DOUBLE CASEMENT WINDOWS WITH TRANSOM (TURN CONDITION SHOWN; TILT CONDITION ALSO APPLIES)

SCALE: 1/2" = 1'-0"

(SEE DOUBLE RECTANGULAR WINDOW ELEVATIONS ON SHEET 2 & 3 FOR WINDOW DETAIL NOT SHOWN)

ALLOWABLE DESIGN PRESSURE (DOUBLE WINDOW TRANSOM UNIT)			
MAX. BOTTOM WINDOW FRAME HEIGHT (IN.)	MAX. FRAME WIDTH (IN.)	ALLOWABLE PRESSURE	
		POSITIVE (PSF)	NEGATIVE (PSF)
101 3/4	79 1/16	70	70
76 11/16	71 13/16	70	(1) 85
(1) HIGHER PRESSURE OF -85 PSF IS ONLY APPLICABLE WHEN GLASS OPTION 2 & STANDARD SIZE MEETING STILES ARE USED			

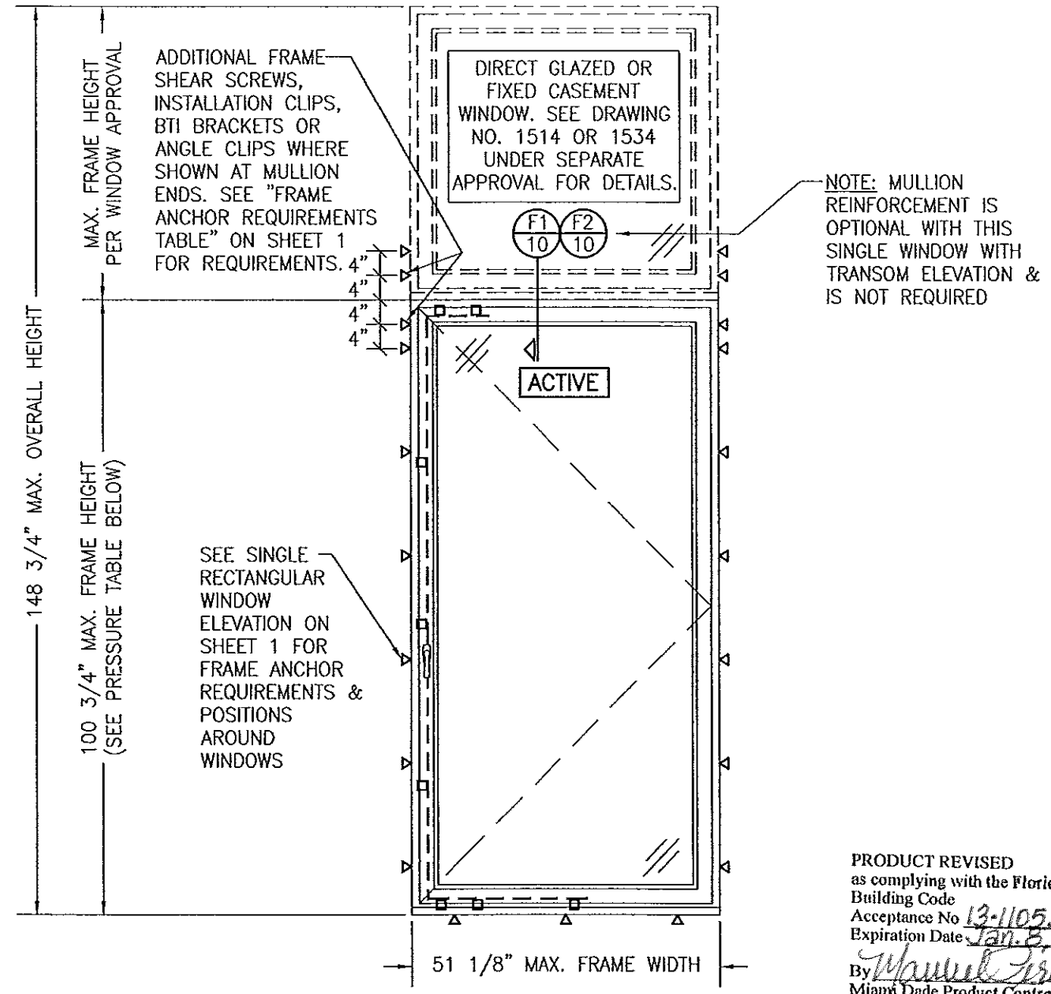

NOTE: MULLION REINFORCEMENT IS OPTIONAL WITH THIS SINGLE WINDOW WITH TRANSOM ELEVATION & IS NOT REQUIRED

PRODUCT REVISED
as complying with the Florida Building Code
Acceptance No 13-1105.09
Expiration Date Jan. 3, 2019
By Manuel Perez
Miami Dade Product Control

INTERIOR ELEVATION; SINGLE CASEMENT WINDOW WITH TRANSOM (TURN CONDITION SHOWN; TILT CONDITION ALSO APPLIES)

SCALE: 1/2" = 1'-0"

(SEE SINGLE RECTANGULAR WINDOW ELEVATIONS ON SHEET 2 & 3 FOR WINDOW DETAIL NOT SHOWN)

ALLOWABLE DESIGN PRESSURE (SINGLE WINDOW TRANSOM UNIT)			
MAX. BOTTOM WINDOW FRAME HEIGHT (IN.)	MAX. FRAME WIDTH (IN.)	ALLOWABLE PRESSURE	
		POSITIVE (PSF)	NEGATIVE (PSF)
101 3/4	51 1/8	70	70
76 11/16	36 11/16	70	(1) 85
(1) HIGHER PRESSURE OF -85 PSF IS ONLY APPLICABLE WHEN GLASS OPTION 2 & STANDARD SIZE MEETING STILES ARE USED			

WARREN W. SCHAEFER LICENSE NO. 44135 STATE OF FLORIDA PROFESSIONAL ENGINEER

DRAWN BY: W.R.M.	CHECKED BY: W.W.S.
PLOT: 1=24	DATE: 04/03/08

NO.	REVISION DESCRIPTION	BY	DATE

DRAWING TITLE
IN-SWING IMPACT WOOD CASEMENT WINDOW

MANUFACTURER
TISCHLER UND SOHN (USA) LTD.
SIX SUBURBAN AVENUE
STAMFORD, CONNECTICUT
203-674-0600

CONSULTANTS
W. W. SCHAEFER ENGINEERING & CONSULTING, P.A. (CA 6809)
7480 150TH COURT NORTH
PALM BEACH GARDENS, FL 33418
PHONE: 561-744-3424

CERTIFICATION
SEP 04 2013
WARREN W. SCHAEFER, P.E.
P.E. NO. 44135

DRAWING NO. 1531
REV. B
SHEET NO. 6 OF 14

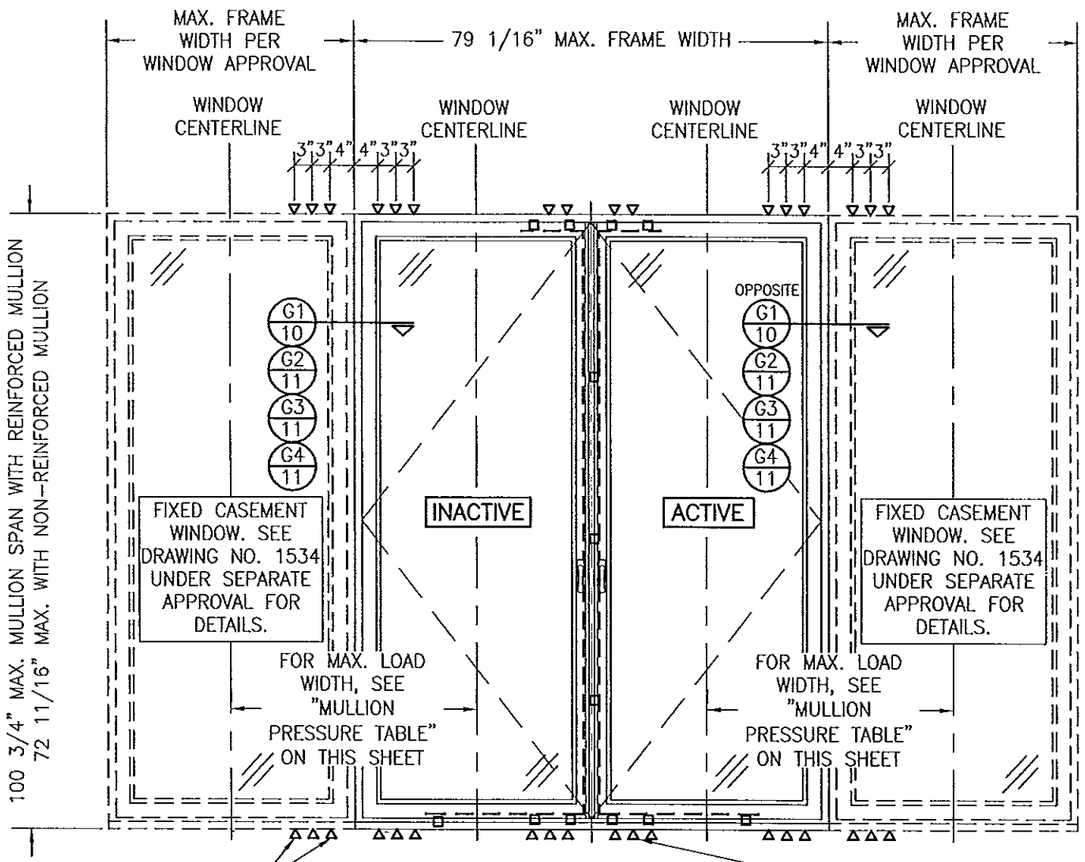

ADDITIONAL FRAME SHEAR SCREWS, INSTALLATION CLIPS, BTI BRACKETS OR ANGLE CLIPS WHERE SHOWN AT MULLION ENDS. SEE "FRAME ANCHOR REQUIREMENTS TABLE" ON SHEET 1 FOR REQUIREMENTS. (SEE MULLION PRESSURE TABLE FOR REQUIRED QUANTITY OF ANCHORS AT MULLION ENDS)

INTERIOR ELEVATION; DOUBLE WINDOW UNIT WITH SIDELITES

SCALE: 1/2" = 1'-0"

OXXO UNIT IS SHOWN. ALL OTHER FIXED/OPERABLE COMBINATIONS ALSO APPLY WITH THE MULLION CONDITIONS SHOWN.

SEE INDIVIDUAL WINDOW ELEVATIONS FOR FRAME ANCHOR REQUIREMENTS & POSITIONS AROUND WINDOWS

MULTIPLE UNIT NOTES:

1. FOR ALL DETAIL NOT SHOWN, INDIVIDUAL WINDOW ELEVATIONS.
2. THERE IS NO LIMIT ON THE NUMBER OF WINDOWS THAT MAY BE COMBINED IN ONE DIRECTION INTO ONE OPENING PROVIDING THE OPENING IS DESIGNED TO SUPPORT ALL LOADS TRANSFERED FROM THE WINDOWS & THEIR MULLIONS.
3. ANY COMBINATION OF FIXED/OPERABLE WINDOWS IN ONE OPENING SHALL APPLY.
4. SHAPED WINDOWS ALSO APPLY TO SIDE MULLING (WHEN APPLICABLE) UNDER THE SAME RESTRICTIONS SHOWN.
5. MULLIONS MAY BE A 1-PIECE SECTION OR JAMB TO JAMB. SEE SECTIONS G1 THROUGH G4 FOR DETAIL.

PRODUCT REVISED
as complying with the Florida Building Code
Acceptance No 13-1105.09
Expiration Date Jan. 8, 2019
By Manuel Perez
Miami Dade Product Control

MULLION ALLOWABLE DESIGN PRESSURE

MAXIMUM MULLION SPAN (IN.)	MAXIMUM LOAD WIDTH (IN.)	ALLOWABLE PRESSURE (+/- PSF) NON-REINFORCED 4 OR 6 END ANCHORS POS.	NON-REINFORCED 4 OR 6 END ANCHORS NEG.	REINFORCED 4 END ANCHORS POS.	REINFORCED 4 END ANCHORS NEG.	REINFORCED 6 END ANCHORS POS.	REINFORCED 6 END ANCHORS NEG.
101	51	N/A	N/A	46.5	46.5	53.8	53.8
	49	N/A	N/A	49.3	49.3	57.1	57.1
	43	N/A	N/A	56.2	56.2	65.1	65.1
	37	N/A	N/A	65.3	65.3	70.0	75.2
	31	N/A	N/A	70.0	78.0	70.0	85.0
	25	N/A	N/A	70.0	85.0	70.0	85.0
96	51	N/A	N/A	48.9	48.9	56.7	56.7
	49	N/A	N/A	51.9	51.9	60.1	60.1
	43	N/A	N/A	59.2	59.2	68.5	68.5
	37	N/A	N/A	68.8	68.8	70.0	79.6
	31	N/A	N/A	70.0	82.1	70.0	85.0
	25	N/A	N/A	70.0	85.0	70.0	85.0
84	51	N/A	N/A	55.9	55.9	64.7	64.7
	49	N/A	N/A	59.3	59.3	68.7	68.7
	43	N/A	N/A	67.6	67.6	70.0	78.3
	37	N/A	N/A	70.0	78.6	70.0	85.0
	31	N/A	N/A	70.0	85.0	70.0	85.0
77	51	N/A	N/A	61.0	61.0	70.0	70.6
	49	N/A	N/A	64.7	64.7	70.0	75.0
	43	N/A	N/A	70.0	73.8	70.0	85.0
	37	N/A	N/A	70.0	85.0	70.0	85.0
72 3/4	51	54.7	54.7	64.6	64.6	70.0	74.8
	49	56.7	56.7	68.5	68.5	70.0	79.3
	43	62.0	62.0	70.0	78.1	70.0	85.0
	37	70.0	70.0	70.0	85.0	70.0	85.0
	31	70.0	80.7	70.0	85.0	70.0	85.0
	25	70.0	85.0	70.0	85.0	70.0	85.0
67	51	66.9	66.9	70.0	70.1	70.0	81.2
	49	69.0	69.0	70.0	74.4	70.0	85.0
	43	70.0	74.9	70.0	84.8	70.0	85.0
	37	70.0	83.7	70.0	85.0	70.0	85.0
	31	70.0	85.0	70.0	85.0	70.0	85.0
61	51	70.0	77.0	70.0	77.0	70.0	85.0
	49	70.0	81.7	70.0	81.7	70.0	85.0
	43	70.0	85.0	70.0	85.0	70.0	85.0
55	51	70.0	85.0	70.0	85.0	70.0	85.0

NOTES:
1. LOAD WIDTH IS THE DISTANCE BETWEEN WINDOW CENTERLINES.
2. ALLOWABLE UNIT PRESSURE SHALL BE THE LESSER OF THE PRESSURES SHOWN IN THIS TABLE & THOSE SPECIFIED FOR THE INDIVIDUAL WINDOW.
3. "N/A" DESIGNATES A SIZE NOT APPLICABLE TO THAT REINFORCEMENT CONDITION.
4. SIZE VALUES IN TABLE ARE +/-1/2"

DRAWN BY: W.R.M.	CHECKED BY: W.W.S.
PLOT: 1=24	DATE: 04/03/08

NO.	REVISION DESCRIPTION	BY	DATE

DRAWING TITLE
IN-SWING IMPACT WOOD CASEMENT WINDOW

MANUFACTURER
TISCHLER UND SOHN (USA) LTD.
SIX SUBURBAN AVENUE
STAMFORD, CONNECTICUT
203-674-0600

CONSULTANTS
W. W. SCHAEFER ENGINEERING & CONSULTING, P.A. (CA 6809)
7480 150TH COURT NORTH
PALM BEACH GARDENS, FL 33418
PHONE: 561-744-3424

CERTIFICATION
WARREN W. SCHAEFER, P.E.
P.E. NO. 44135

SEP 04 2013

DRAWING NO. 1531 REV. B
SHEET NO. 7 OF 14

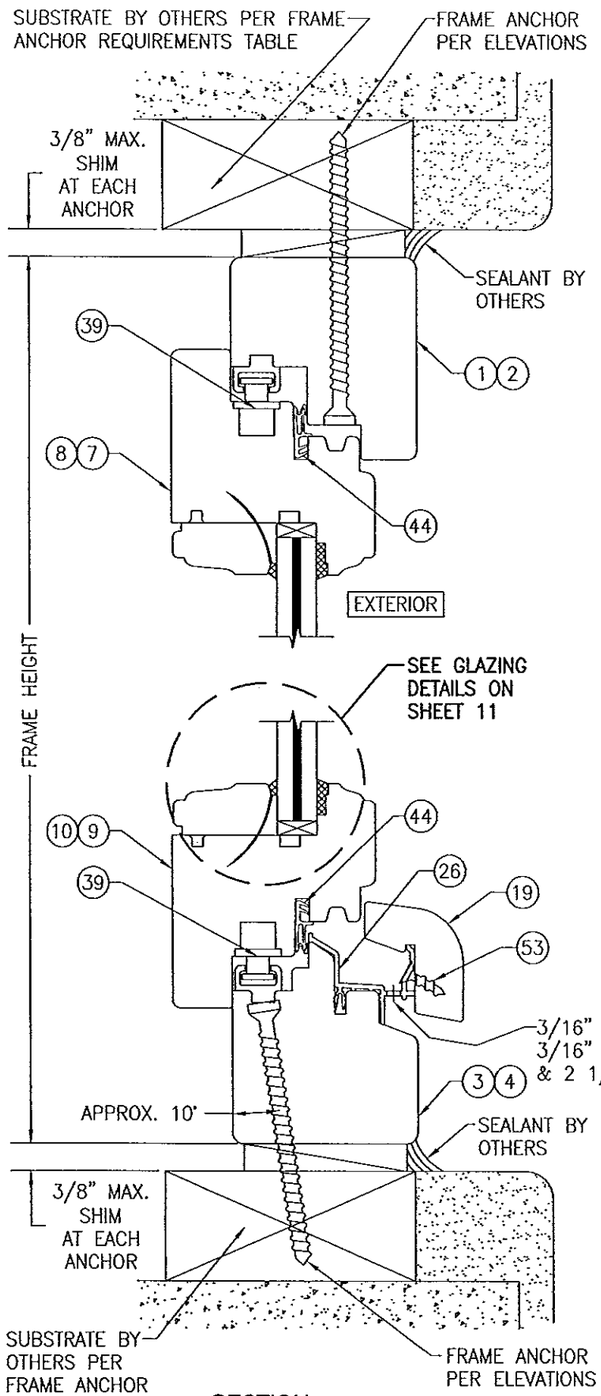

SECTION A/8
SCALE: 1/2 FULL

FRAME SHEAR SCREW INSTALLATION SHOWN. SEE OPTIONAL DETAILS FOR OTHER INSTALLATION CONDITIONS.

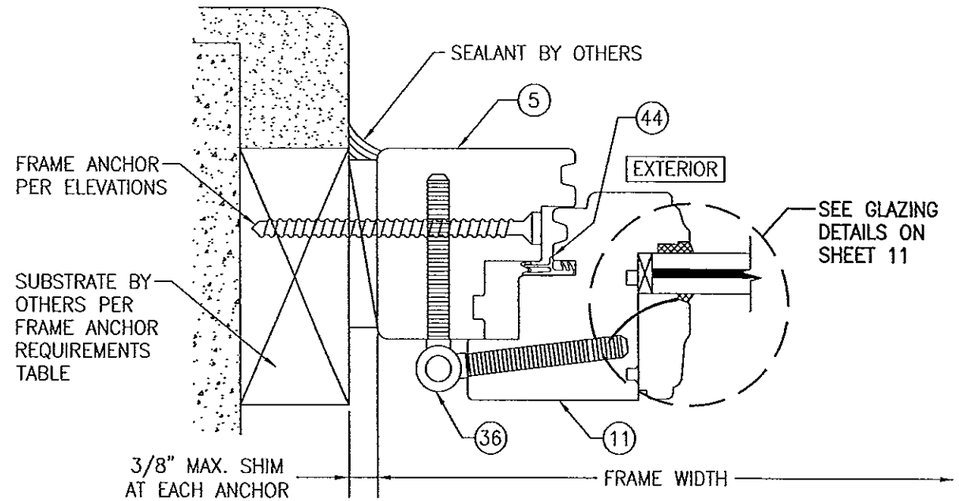

SECTION B1/8
SCALE: 1/2 FULL

(SCREWED IN HINGE CONDITION)

FRAME SHEAR SCREW INSTALLATION SHOWN. SEE OPTIONAL DETAILS FOR OTHER INSTALLATION CONDITIONS.

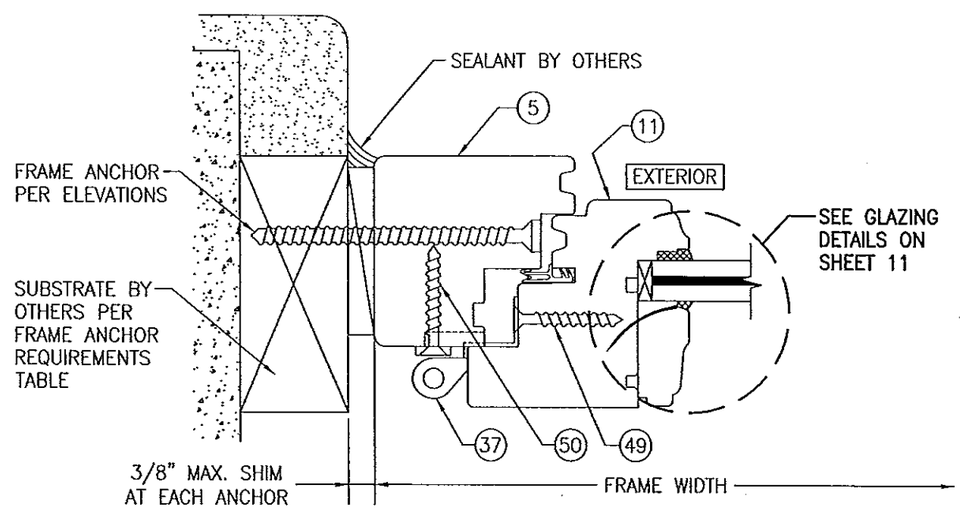

SECTION B2/8
SCALE: 1/2 FULL

(POT HINGE; TURN ONLY CONDITION)

FRAME SHEAR SCREW INSTALLATION SHOWN. SEE OPTIONAL DETAILS FOR OTHER INSTALLATION CONDITIONS.
(FOR DETAIL NOT SHOWN, SEE SECTION B1/8)

PRODUCT REVISED
as complying with the Florida Building Code
Acceptance No 13-1105.09
Expiration Date Jan. 8, 2019
By Manuel Fuez
Miami-Dade Product Control

WARREN W. SCHAEFER LICENSED NO. 44135 STATE OF FLORIDA PROFESSIONAL ENGINEER

DRAWN BY: W.R.M.	CHECKED BY: W.W.S.
PLOT: 1=2	DATE: 04/03/08

NO.	REVISION DESCRIPTION	BY	DATE

DRAWING TITLE
IN-SWING IMPACT WOOD CASEMENT WINDOW

MANUFACTURER
TISCHLER UND SOHN (USA) LTD.
SIX SUBURBAN AVENUE
STAMFORD, CONNECTICUT
203-674-0600

CONSULTANTS
W. W. SCHAEFER ENGINEERING & CONSULTING, P.A. (CA 6809)
7480 150TH COURT NORTH
PALM BEACH GARDENS, FL 33418
PHONE: 561-744-3424

CERTIFICATION
SEP 04 2013
WARREN W. SCHAEFER, P.E.
P.E. NO. 44135

DRAWING NO. 1531 REV. B
SHEET NO. 8 OF 14

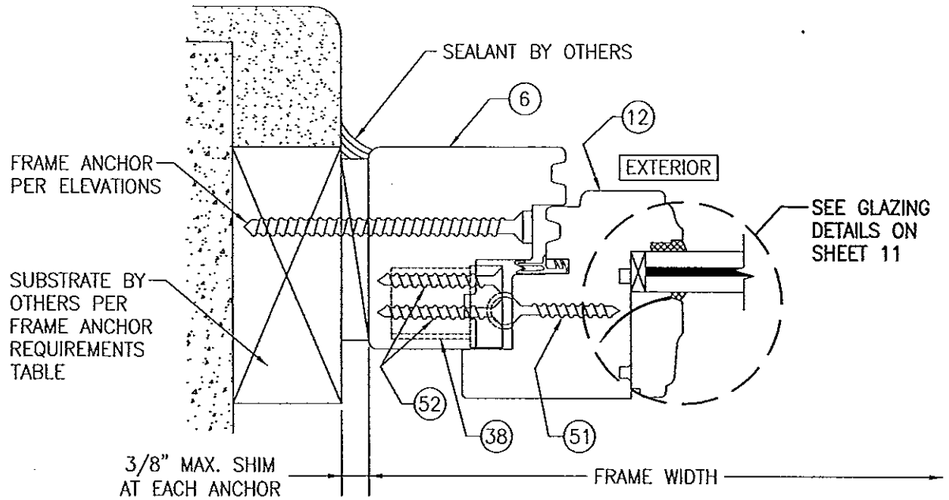

SECTION B3/9
SCALE: 1/2 FULL
(CONCEALED HINGE; TURN ONLY CONDITION)
FRAME SHEAR SCREW INSTALLATION SHOWN. SEE OPTIONAL DETAILS FOR OTHER INSTALLATION CONDITIONS.
(FOR DETAIL NOT SHOWN, SEE SECTION B1/8)

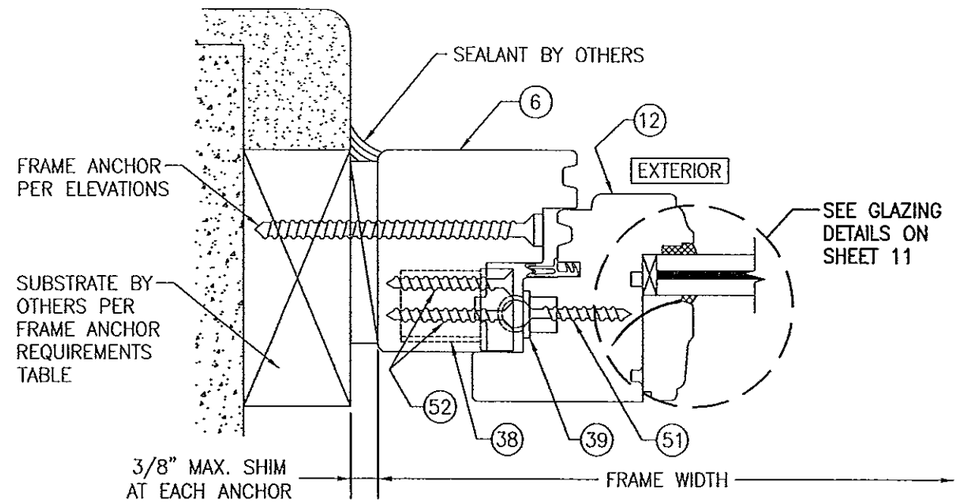

SECTION B4/9
SCALE: 1/2 FULL
(CONCEALED HINGE; TILT CONDITION)
FRAME SHEAR SCREW INSTALLATION SHOWN. SEE OPTIONAL DETAILS FOR OTHER INSTALLATION CONDITIONS.
(FOR DETAIL NOT SHOWN, SEE SECTION B1/8)

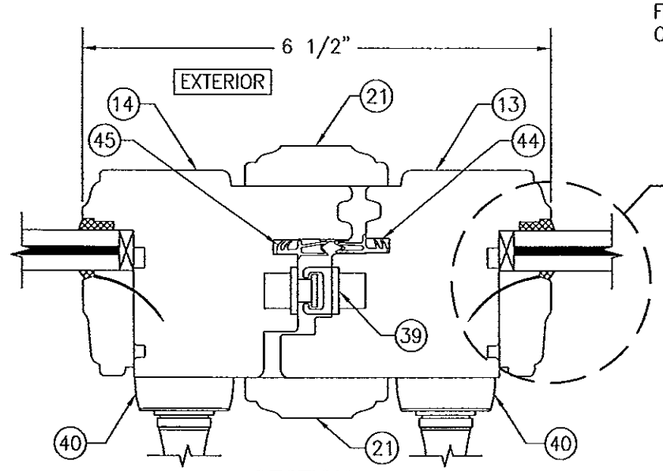

SECTION C1/9
SCALE: 1/2 FULL
(STANDARD MEETING STILE CONDITION)

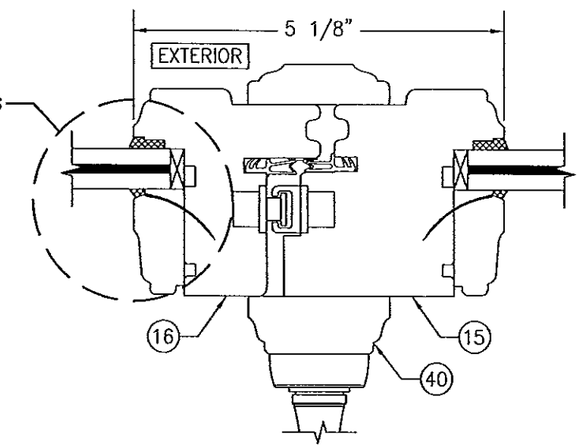

SECTION C2/9
SCALE: 1/2 FULL
(NARROW MEETING STILE CONDITION)
(FOR DETAIL NOT SHOWN, SEE SECTION C1/9)

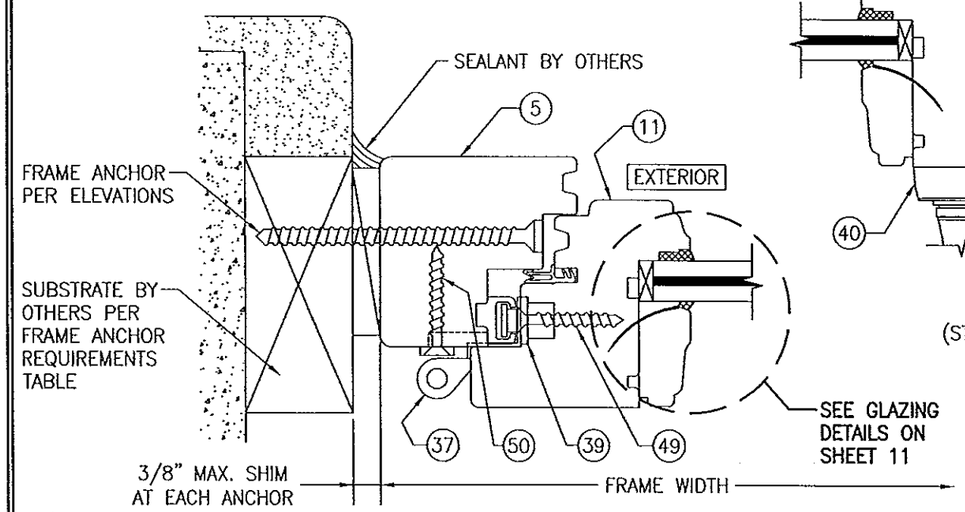

SECTION B5/9
SCALE: 1/2 FULL
(POT HINGE; TILT CONDITION)
FRAME SHEAR SCREW INSTALLATION SHOWN. SEE OPTIONAL DETAILS FOR OTHER INSTALLATION CONDITIONS.
(FOR DETAIL NOT SHOWN, SEE SECTION B1/8)

PRODUCT REVISED
as complying with the Florida Building Code
Acceptance No 13-1105.09
Expiration Date Jan. 8, 2019
By Manuel Perez
Miami-Dade Product Control

DRAWN BY: W.R.M.	CHECKED BY: W.W.S.
PLOT: 1=2	DATE: 04/03/08

NO.	REVISION DESCRIPTION	BY	DATE

DRAWING TITLE
IN-SWING IMPACT WOOD CASEMENT WINDOW

MANUFACTURER
TISCHLER UND SOHN (USA) LTD.
SIX SUBURBAN AVENUE
STAMFORD, CONNECTICUT
203-674-0600

CONSULTANTS
W. W. SCHAEFER ENGINEERING & CONSULTING, P.A. (CA 6809)
7480 150TH COURT NORTH
PALM BEACH GARDENS, FL 33418
PHONE: 561-744-3424

CERTIFICATION
SEP 04 2013
WARREN W. SCHAEFER, P.E.
P.E. NO. 44135

DRAWING NO. 1531 REV. B
SHEET NO. 9 OF 14

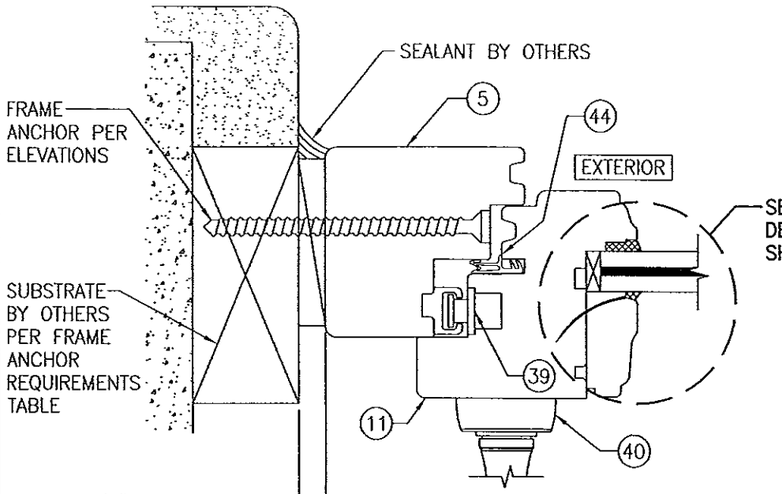

SECTION D1/10
SCALE: 1/2 FULL
FRAME SHEAR SCREW INSTALLATION SHOWN. SEE OPTIONAL DETAILS FOR OTHER INSTALLATION CONDITIONS.

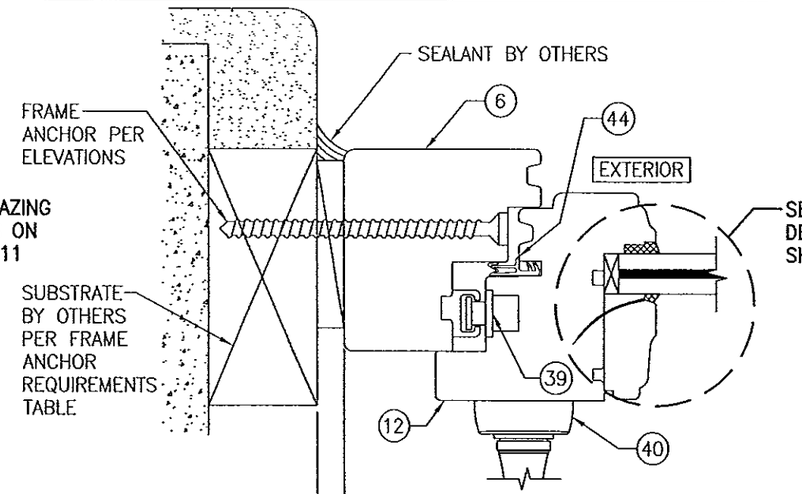

SECTION D2/10
SCALE: 1/2 FULL
FRAME SHEAR SCREW INSTALLATION SHOWN. SEE OPTIONAL DETAILS FOR OTHER INSTALLATION CONDITIONS.

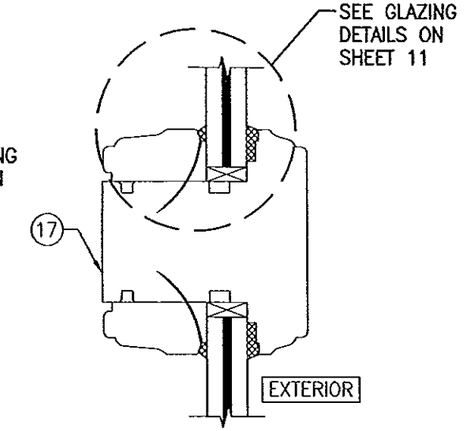

SECTION E/10
SCALE: 1/2 FULL

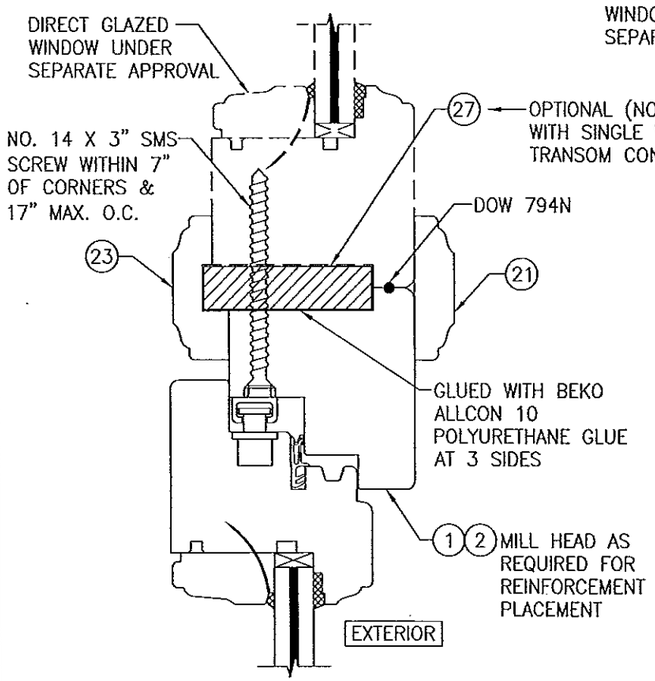

SECTION F1/10
SCALE: 1/2 FULL
(FOR DETAIL NOT SHOWN, SEE OTHER SECTIONS)

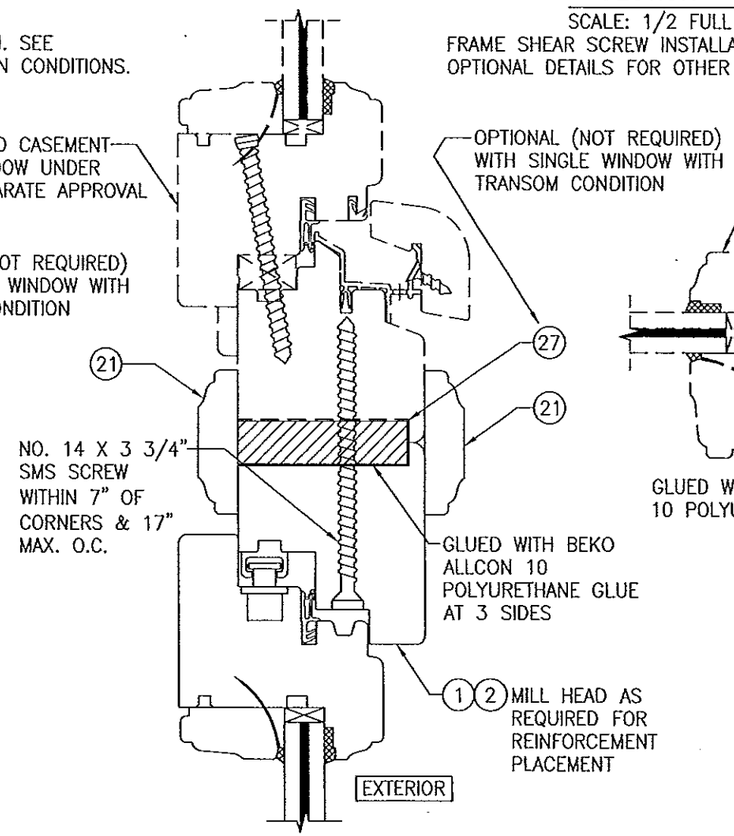

SECTION F2/10
SCALE: 1/2 FULL
(FOR DETAIL NOT SHOWN, SEE OTHER SECTIONS)

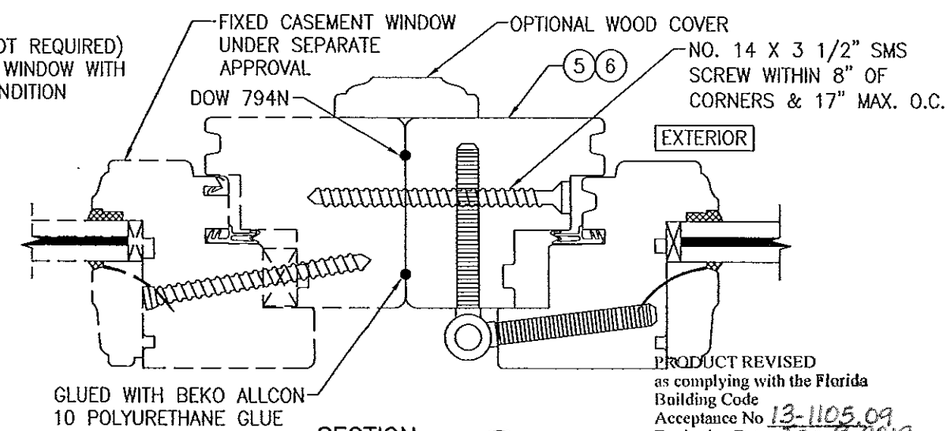

SECTION G1/10
SCALE: 1/2 FULL
(NON-REINFORCED MULLION)
(FOR DETAIL NOT SHOWN, SEE OTHER SECTIONS)
(SCREWED IN HINGE CONDITION SHOWN; CONCEALED & POT HINGE CONDITIONS ALSO APPLY)

PRODUCT REVISED
as complying with the Florida Building Code
Acceptance No 13-1105.09
Expiration Date Jan. 8, 2019
By Manuel Cruz
Miami Dade Product Control

MULLION SECTION NOTE (APPLICABLE TO SECTIONS G1–G4)
SECTIONS SHOW FIXED MULLED TO OPERABLE. OPERABLE TO OPERABLE IS JOINED THE SAME.

WARREN W. SCHAEFER LICENSE No 44135 STATE OF FLORIDA PROFESSIONAL ENGINEER

DRAWN BY: W.R.M.	CHECKED BY: W.W.S.
PLOT: 1=2	DATE: 04/03/08

NO.	REVISION DESCRIPTION	BY	DATE

DRAWING TITLE: IN–SWING IMPACT WOOD CASEMENT WINDOW

MANUFACTURER: TISCHLER UND SOHN (USA) LTD.
SIX SUBURBAN AVENUE
STAMFORD, CONNECTICUT
203–674–0600

CONSULTANTS: W. W. SCHAEFER ENGINEERING & CONSULTING, P.A. (CA 6809)
7480 150TH COURT NORTH
PALM BEACH GARDENS, FL 33418
PHONE: 561–744–3424

CERTIFICATION: SEP 04 2013
WARREN W. SCHAEFER, P.E.
P.E. NO. 44135

DRAWING NO. 1531 REV. B
SHEET NO. 10 OF 14

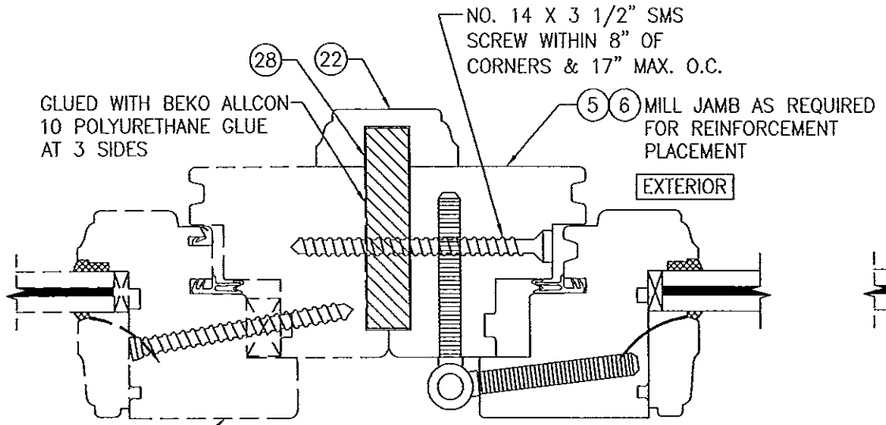

SECTION G2/11
SCALE: 1/2 FULL
(REINFORCED MULLION)
(FOR DETAIL NOT SHOWN, SEE OTHER SECTIONS)
(SCREWED IN HINGE CONDITION SHOWN; CONCEALED & POT HINGE CONDITIONS ALSO APPLY)

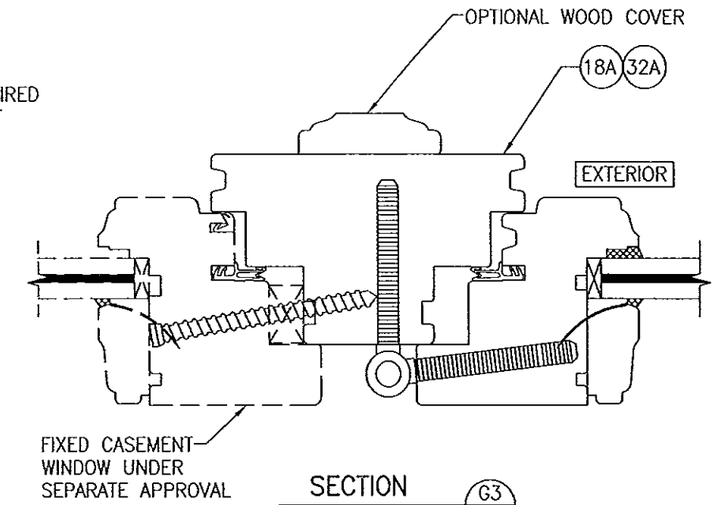

SECTION G3/11
SCALE: 1/2 FULL
(NON-REINFORCED MULLION)
(FOR DETAIL NOT SHOWN, SEE OTHER SECTIONS)
(SCREWED IN HINGE CONDITION SHOWN; CONCEALED & POT HINGE CONDITIONS ALSO APPLY)

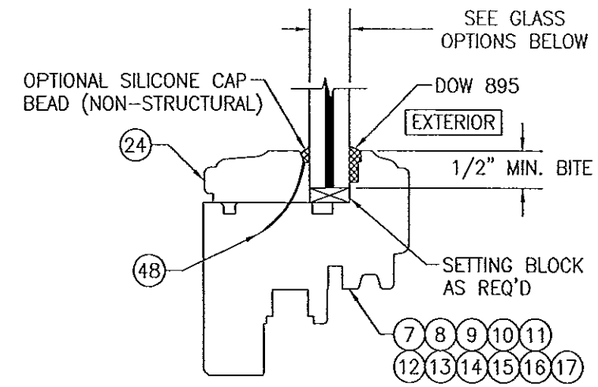

NON-I.G. GLAZING DETAIL
GLASS OPTIONS 1, 2 & 3

GLASS OPTION 1: 9/16" LAMINATED GLASS (1/4" AN./0.09" EASTMAN CHEMICAL CO. SAFLEX/1/4" AN.)

GLASS OPTION 2: 9/16" LAMINATED GLASS (1/4" H.S./0.075" EASTMAN CHEMICAL CO. SAFLEX CP/1/4" H.S.)

GLASS OPTION 3: 9/16" LAMINATED GLASS (1/4" AN./0.075" EASTMAN CHEMICAL CO. SAFLEX CP/1/4" AN.)

MULLION SECTION NOTE (APPLICABLE TO SECTIONS G1-G4)

SECTIONS SHOW FIXED MULLED TO OPERABLE. OPERABLE TO OPERABLE IS JIONED THE SAME.

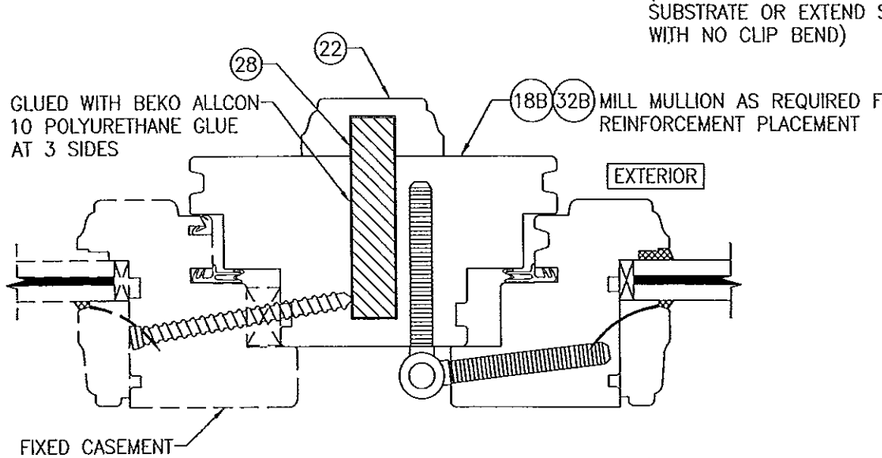

SECTION G4/11
SCALE: 1/2 FULL
(REINFORCED MULLION)
(FOR DETAIL NOT SHOWN, SEE OTHER SECTIONS)
(SCREWED IN HINGE CONDITION SHOWN; CONCEALED & POT HINGE CONDITIONS ALSO APPLY)

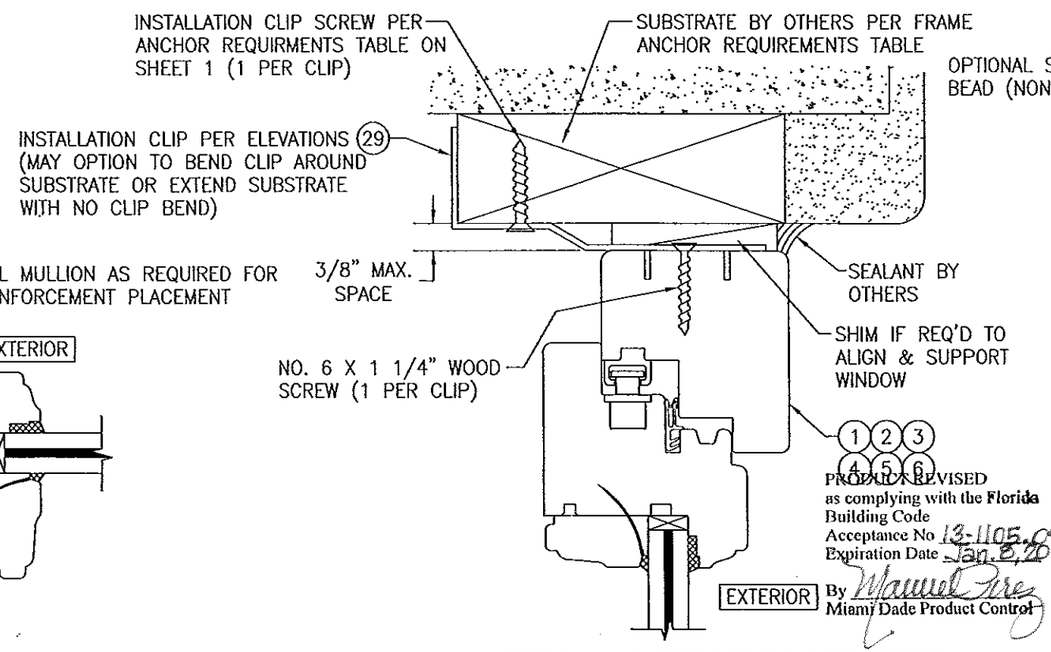

PRODUCT REVISED
as complying with the Florida Building Code
Acceptance No 13-1105.09
Expiration Date Jan. 8, 2019
By Manuel Perez
Miami-Dade Product Control

OPTIONAL INSTALLATION CLIP DETAIL
(HEAD SECTION SHOWN, SILL & SIDES ARE INSTALLED THE SAME)
(FOR DETAIL NOT SHOWN, SEE OTHER SECTIONS)

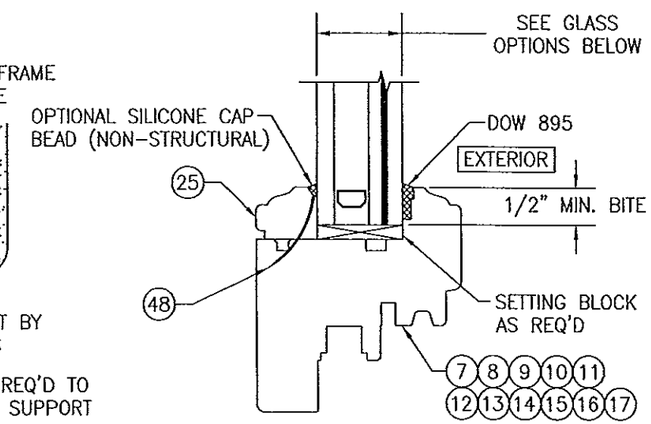

I.G. GLAZING DETAIL
GLASS OPTIONS 4, 5 & 6

GLASS OPTION 4: 1 3/16" LAMINATED I.G. (3/16" AN./0.09" EASTMAN CHEMICAL CO. SAFLEX/3/16" AN./1/2" AIR SPACE/1/4 AN.)

GLASS OPTION 5: 1 3/16" LAMINATED I.G. (3/16" AN./0.09" EASTMAN CHEMICAL CO. SAFLEX/3/16" AN./1/2" AIR SPACE/1/4 TEMP.)

GLASS OPTION 6: 1 3/16" LAMINATED I.G. (3/16" H.S./0.075" EASTMAN CHEMICAL CO. SAFLEX CP/3/16" H.S./1/2" AIR SPACE/1/4 TEMP.)

NOTE: THE SINGLE PANE OF THE IG GLASS SHALL BE TEMPERED WHEN REQUIRED TO CONFORM WITH SECTION 2406 OF THE FLORIDA BUILDING CODE FOR USE OF GLASS IN HAZARDOUS LOCATIONS.

DRAWN BY: W.R.M.	CHECKED BY: W.W.S.
PLOT: 1=2	DATE: 04/03/08

NO.	REVISION DESCRIPTION	BY	DATE

DRAWING TITLE
IN-SWING IMPACT WOOD CASEMENT WINDOW

MANUFACTURER
TISCHLER UND SOHN (USA) LTD.
SIX SUBURBAN AVENUE
STAMFORD, CONNECTICUT
203-674-0600

CONSULTANTS
W. W. SCHAEFER ENGINEERING & CONSULTING, P.A. (CA 6809)
7480 150TH COURT NORTH
PALM BEACH GARDENS, FL 33418
PHONE: 561-744-3424

CERTIFICATION
WARREN W. SCHAEFER P.E. NO. 44135

DRAWING NO. 1531 REV. B
SHEET NO. 11 OF 14

SEP 04 2013

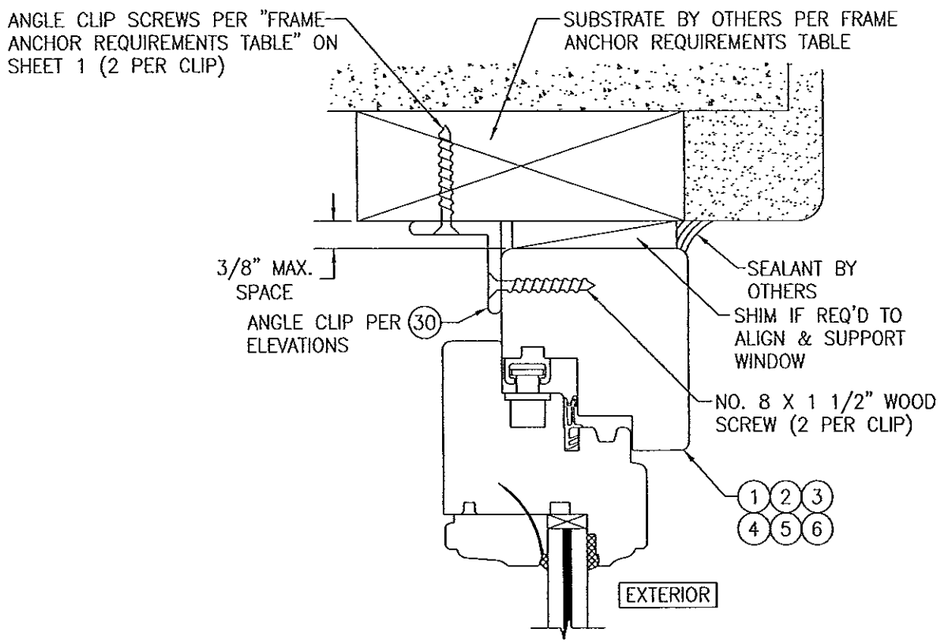

OPTIONAL INSTALLATION ANGLE CLIP DETAIL

(HEAD SECTION SHOWN, SILL & SIDES ARE INSTALLED THE SAME)
(FOR DETAIL NOT SHOWN, SEE OTHER SECTIONS)

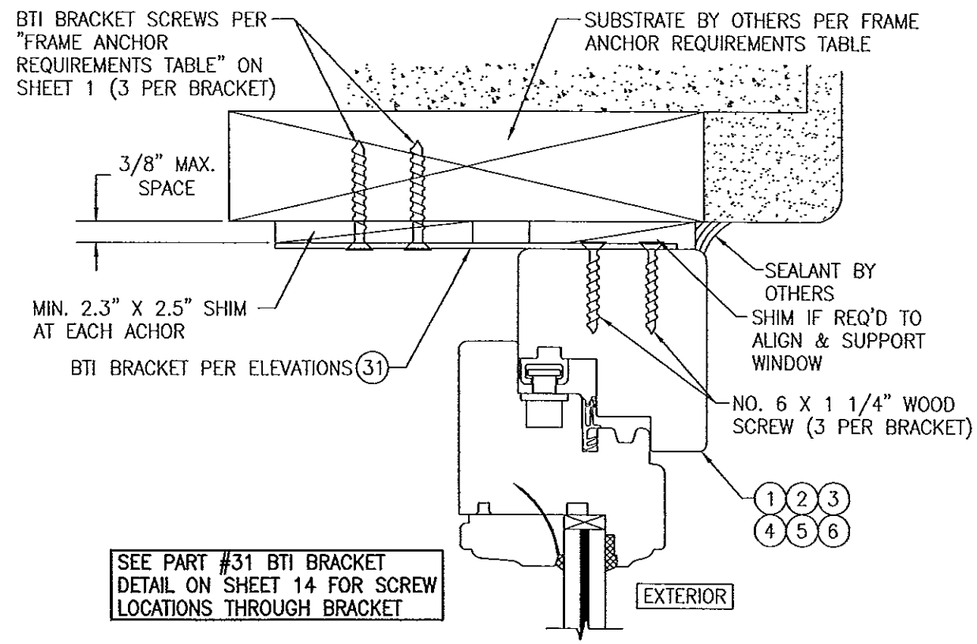

OPTIONAL INSTALLATION BTI BRACKET DETAIL

(HEAD SECTION SHOWN, SILL & SIDES ARE INSTALLED THE SAME)
(FOR DETAIL NOT SHOWN, SEE OTHER SECTIONS)

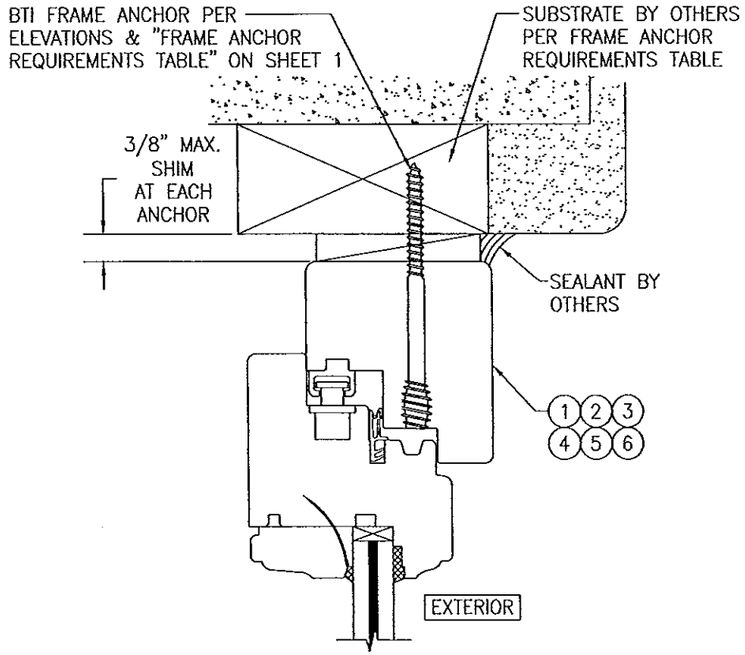

OPTIONAL BTI SCREW DETAIL

(HEAD SECTION SHOWN, SILL & SIDES ARE INSTALLED THE SAME)
(FOR DETAIL NOT SHOWN, SEE OTHER SECTIONS)

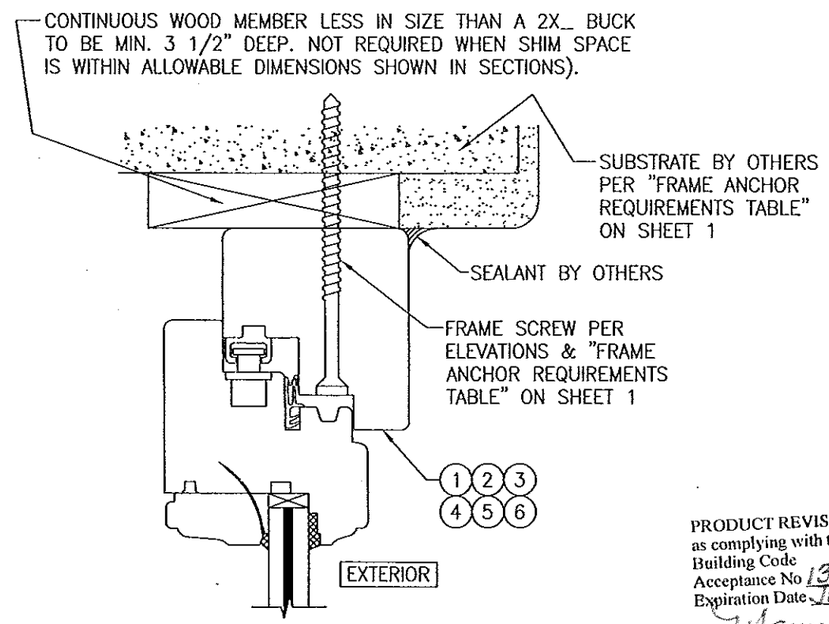

OPTIONAL DIRECT MOUNT DETAIL TO SUBSTRATE WITH SPACER

(HEAD SECTION SHOWN, SILL & SIDES ARE INSTALLED THE SAME)
(FOR DETAIL NOT SHOWN, SEE OTHER SECTIONS)

PRODUCT REVISED
as complying with the Florida Building Code
Acceptance No 13-1105.09
Expiration Date Jan. 8, 2019
By Manuel Perez
Miami Dade Product Control

WARREN W. SCHAEFER P.E. No. 44135 STATE OF FLORIDA PROFESSIONAL ENGINEER

DRAWN BY: W.R.M.	CHECKED BY: W.W.S.
PLOT: 1=2	DATE: 04/03/08

NO.	REVISION DESCRIPTION	BY	DATE

DRAWING TITLE: IN-SWING IMPACT WOOD CASEMENT WINDOW

MANUFACTURER: TISCHLER UND SOHN (USA) LTD.
SIX SUBURBAN AVENUE
STAMFORD, CONNECTICUT
203-674-0600

CONSULTANTS: W. W. SCHAEFER ENGINEERING & CONSULTING, P.A. (CA 6809)
7480 150TH COURT NORTH
PALM BEACH GARDENS, FL 33418
PHONE: 561-744-3424

CERTIFICATION: SEP 04 2013
WARREN W. SCHAEFER, P.E.
P.E. NO. 44135

DRAWING NO. 1531 REV. B

SHEET NO. 12 OF 14

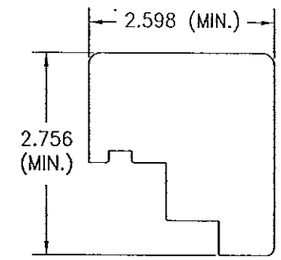

1 HEAD
(POT & SCREW HINGE WINDOW)

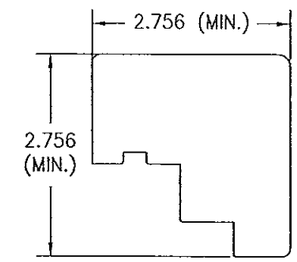

2 HEAD
(CONCEALED HINGE WINDOW)

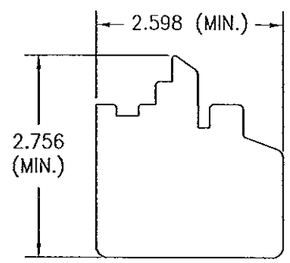

3 SILL
(POT & SCREW HINGE WINDOW)

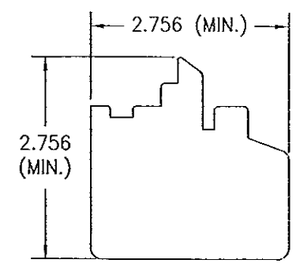

4 SILL
(CONCEALED HINGE WINDOW)

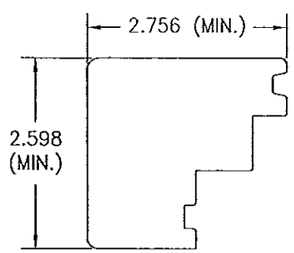

5 JAMB
(POT & SCREW HINGE WINDOW)

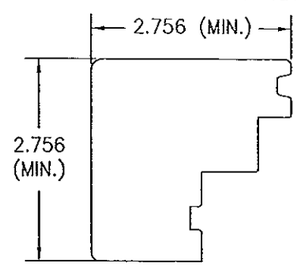

6 JAMB
(CONCEALED HINGE WINDOW)

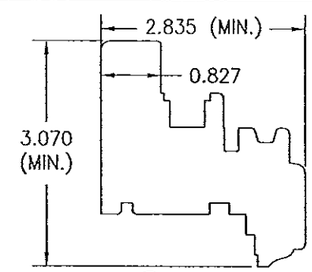

7 TOP RAIL
(POT & SCREW HINGE WINDOW)

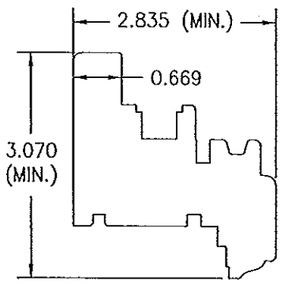

8 TOP RAIL
(CONCEALED HINGE WINDOW)

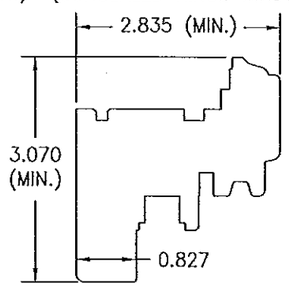

9 BOTTOM RAIL
(POT & SCREW HINGE WINDOW)

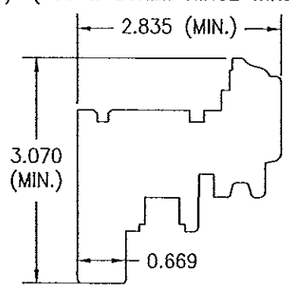

10 BOTTOM RAIL
(CONCEALED HINGE WINDOW)

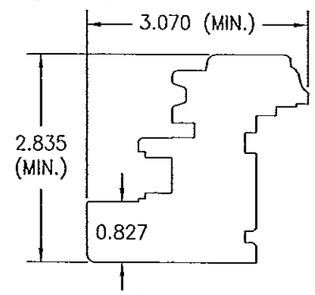

11 STILE
(POT & SCREW HINGE WINDOW)

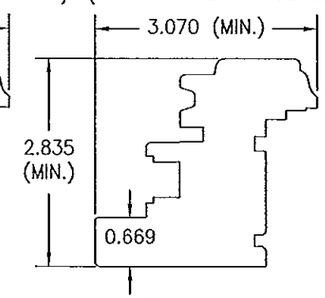

12 STILE
(CONCEALED HINGE WINDOW)

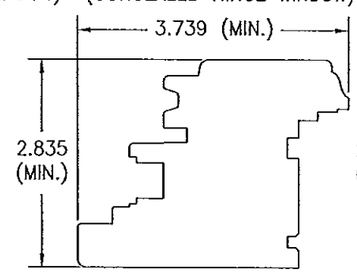

13 STANDARD ACTIVE MEETING STILE

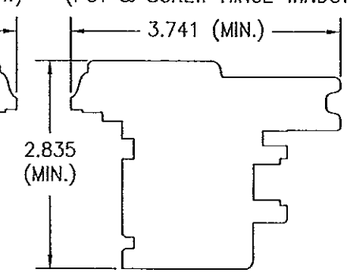

14 STANDARD INACTIVE MEETING STILE

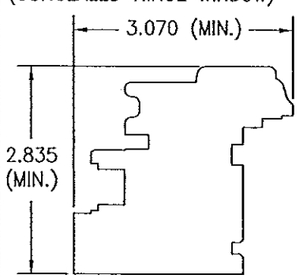

15 NARROW ACTIVE MEETING STILE

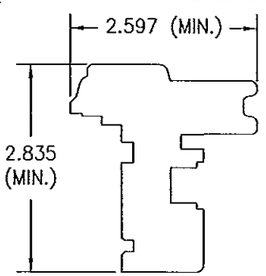

16 NARROW INACTIVE MEETING STILE

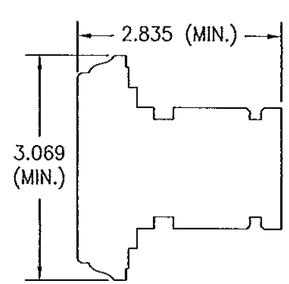

17 MID-RAIL

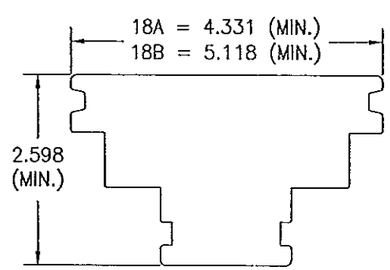

18A 18B ONE-PIECE MULLION
(POT & SCREW HINGE WINDOW)

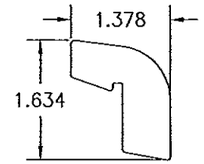

19 BOTTOM RAIL DRIP EDGE

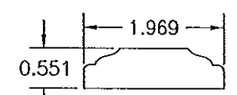

21 ASTRAGAL

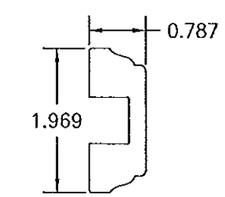

22 MULLION BAR COVER

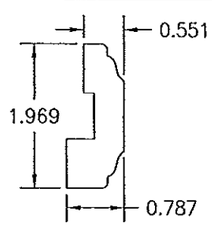

23 MULLION BAR COVER

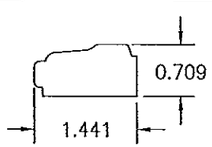

24 NON-I.G. GLAZING BEAD

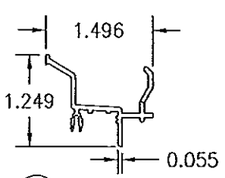

26 WATER DEFLECTOR

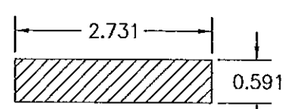

28 TRANSOM/VERTICAL MULLION REINFORCEMENT

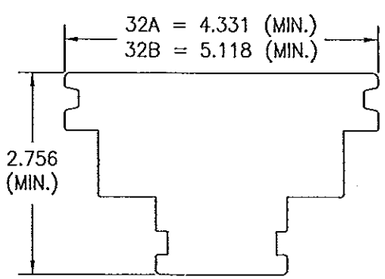

32A 32B ONE-PIECE MULLION
(CONCEALED HINGE WINDOW)

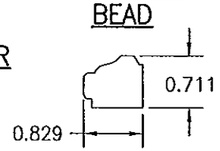

25 I.G. GLAZING BEAD

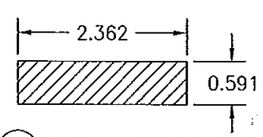

27 TRANSOM MULLION REINFORCEMENT

PRODUCT REVISED
as complying with the Florida
Building Code
Acceptance No 13-1105.09
Expiration Date Jan. 8, 2019
By Manuel Perez
Miami Dade Product Control

WARREN W. SCHAEFER LICENSE No. 44135 STATE OF FLORIDA PROFESSIONAL ENGINEER

DRAWN BY: W.R.M.	CHECKED BY: W.W.S.
PLOT: 1=2	DATE: 04/03/08

NO.	REVISION DESCRIPTION	BY	DATE

DRAWING TITLE
IN-SWING IMPACT WOOD CASEMENT WINDOW

MANUFACTURER
TISCHLER UND SOHN (USA) LTD.
SIX SUBURBAN AVENUE
STAMFORD, CONNECTICUT
203-674-0600

CONSULTANTS
W. W. SCHAEFER ENGINEERING & CONSULTING, P.A. (CA 6809)
7480 150TH COURT NORTH
PALM BEACH GARDENS, FL 33418
PHONE: 561-744-3424

CERTIFICATION
SEP 04 2013
WARREN W. SCHAEFER, P.E.
P.E. NO. 44135

DRAWING NO. 1531
REV. B
SHEET NO. 13 OF 14

ITEM #	ITEM DESCRIPTION	MANUFACTURER/NOTES
	PARTS	
1	HEAD (POT & SCREW HINGE WINDOW)	MAHOGANY
2	HEAD (CONCEALED HINGE WINDOW)	MAHOGANY
3	SILL (POT & SCREW HINGE WINDOW)	MAHOGANY
4	SILL (CONCEALED HINGE WINDOW)	MAHOGANY
5	JAMB (POT & SCREW HINGE WINDOW)	MAHOGANY
6	JAMB (CONCEALED HINGE WINDOW)	MAHOGANY
7	TOP RAIL (POT & SCREW HINGE WINDOW)	MAHOGANY
8	TOP RAIL (CONCEALED HINGE WINDOW)	MAHOGANY
9	BOTTOM RAIL (POT & SCREW HINGE WINDOW)	MAHOGANY
10	BOTTOM RAIL (CONCEALED HINGE WINDOW)	MAHOGANY
11	STILE (POT & SCREW HINGE WINDOW)	MAHOGANY
12	STILE (CONCEALED HINGE WINDOW)	MAHOGANY
13	STANDARD ACTIVE MEETING STILE	MAHOGANY
14	STANDARD INACTIVE MEETING STILE	MAHOGANY
15	NARROW ACTIVE MEETING STILE	MAHOGANY
16	NARROW INACTIVE MEETING STILE	MAHOGANY
17	MID-RAIL	MAHOGANY
18A	ONE-PIECE NON-REINFORCED MULLION (POT & SCREW HINGE WINDOW)	MAHOGANY
18B	ONE-PIECE REINFORCED MULLION (POT & SCREW HINGE WINDOW)	MAHOGANY
19	BOTTOM RAIL DRIP EDGE	MAHOGANY
21	ASTRAGAL	MAHOGANY
22	MULLION BAR COVER	MAHOGANY
23	MULLION BAR COVER	MAHOGANY
24	NON-I.G. GLAZING BEAD	MAHOGANY
25	I.G. GLAZING BEAD	MAHOGANY
26	WATER DEFLECTOR	6061-T6 ALUMINUM
27	TRANSOM MULLION REINFORCEMENT	34 KSI STAINLESS STEEL OR A36 STEEL
28	TRANSOM/VERTICAL MULLION REINFORCEMENT	34 KSI STAINLESS STEEL OR A36 STEEL
29	INSTALLATION CLIP	GALVANIZED 54 KSI STEEL
30	ANGLE CLIP	6061-T6 ALUMINUM
31	BTI BRACKET	GALVANIZED 54 KSI STEEL
32A	ONE-PIECE NON-REINFORCED MULLION (CONCEALED HINGE WINDOW)	MAHOGANY
32B	ONE-PIECE REINFORCED MULLION (CONCEALED HINGE WINDOW)	MAHOGANY
	HARDWARE	
36	SCREWED IN HINGE	74mm X 16mm GENIATEC GMBH; FE 74WF 120mm X 16mm GENIATEC GMBH; TUE 120WF 85mm X 20mm SIMONS BAKA; C1-20 130mm X 15mm ANUBA; 515 SM 130mm X 18mm ANUBA; 518 SM
37	POT HINGE	BY: SIEGENIA AUBI KG TYPE: SI
38	CONCEALED HINGE	BY: SIEGENIA AUBI KG TYPE: UV
39	MULTI-POINT LOCK SYSTEM (9mm OR 13mm OFFSET)	BY: SIEGENIA AUBI KG TYPE: MUSHROOM
40	HANDLE	AS REQUIRED TO OPERATE LOCK SYSTEM
	SEALS & SEALANTS	
44	WEATHERSTRIP	THERMOPLASTIC ELASTOMER; BY: DEVENTER
45	WEATHERSTRIP	THERMOPLASTIC ELASTOMER; BY: DEVENTER

ITEM #	ITEM DESCRIPTION	MANUFACTURER/NOTES
	FASTENERS	
48	OPTIONAL 18 GA. X 1 1/2" S.S. CURVED NAIL	4" FROM CORNERS & 12" MAX. O.C.
49	NO. 8 X 1 1/2" WOOD SCREW	3 PER POT HINGE INTO SASH
50	NO. 8 X 1 1/2" WOOD SCREW	4 PER POT HINGE INTO JAMB
51	NO. 8 X 1 1/2" WOOD SCREW	2 PER CONCEALED HINGE INTO SASH
52	NO. 8 X 1 3/4" WOOD SCREW	4 PER CONCEALED HINGE INTO JAMB
53	NO. 6 X 5/8" WOOD SCREW	2" FROM CORNERS & 4 3/4" MAX. O.C.

NOTE: WOOD USED IN TESTING WAS SIPO MAHOGANY WITH A SPECIFIC GRAVITY OF G = 0.62 AND A MODULUS OF ELASTICITY OF E = 1,6000,000 PSI. OTHER WOOD SPECIES APPLICABLE FOR USE WITH THIS PRODUCT ARE THOSE WITH A SPECIFIC GRAVITY OF 0.62 AND MODULUS OF ELASTICITY OF 1,600,000 PSI OR GREATER. ALL WOOD IS MINIMUM GRADE 2 MILLED BY TISCHLER UND SOHN TO SELECT.

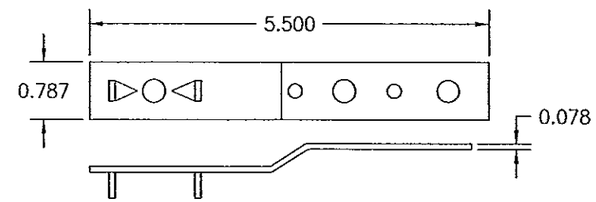

(29) INSTALLATION CLIP

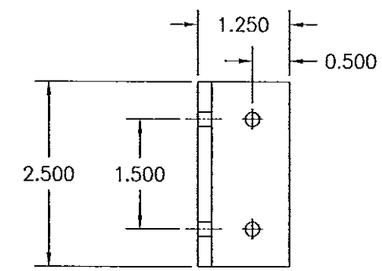

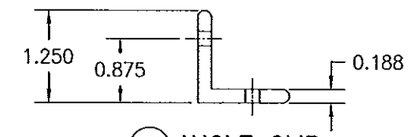

(30) ANGLE CLIP

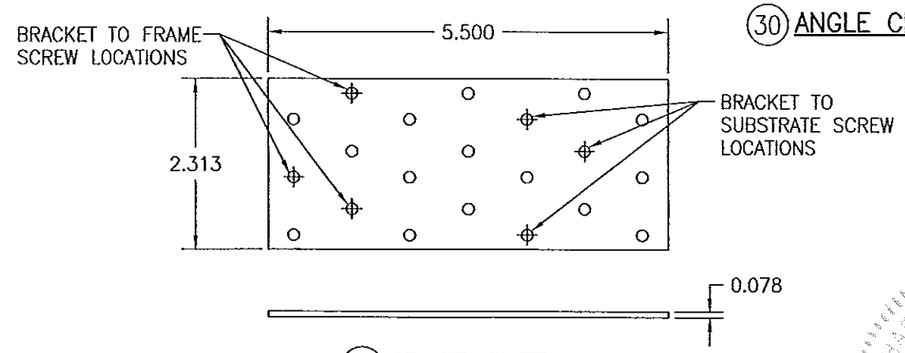

(31) BTI BRACKET

PRODUCT REVISED
as complying with the Florida
Building Code
Acceptance No 13-1105.09
Expiration Date Jan 5, 2019
By Manuel Perez
Miami Dade Product Control

WARREN W. SCHAEFER LICENSE No. 44135 STATE OF FLORIDA PROFESSIONAL ENGINEER

NO.	REVISION DESCRIPTION	BY	DATE

DRAWN BY: W.R.M. | CHECKED BY: W.W.S.
PLOT: 1=2 | DATE: 04/03/08

DRAWING TITLE: IN-SWING IMPACT WOOD CASEMENT WINDOW

MANUFACTURER: TISCHLER UND SOHN (USA) LTD.
SIX SUBURBAN AVENUE
STAMFORD, CONNECTICUT
203-674-0600

CONSULTANTS: W. W. SCHAEFER ENGINEERING & CONSULTING, P.A. (CA 6809)
7480 150TH COURT NORTH
PALM BEACH GARDENS, FL 33418
PHONE: 561-744-3424

CERTIFICATION: SEP 04 2013
WARREN W. SCHAEFER, P.E.
P.E. NO. 44135

DRAWING NO. 1531 | REV. B
SHEET NO. 14 OF 14