MIAMI-DADE COUNTY
PRODUCT CONTROL SECTION
11805 SW 26 Street, Room 208
Miami, Florida 33175-2474
T (786) 315-2590 F (786) 315-2599
www.miamidade.gov/economy

DEPARTMENT OF REGULATORY AND ECONOMIC RESOURCES (RER)
BOARD AND CODE ADMINISTRATION DIVISION

NOTICE OF ACCEPTANCE (NOA)

Jupiter Glass specialties Inc., dba
South Eastern Door Company
1505 Commerce Lane P.O. Box 794
Jupiter, FL 33458

SCOPE:

This NOA is being issued under the applicable rules and regulations governing the use of construction materials. The documentation submitted has been reviewed and accepted by Miami-Dade County RER -Product Control Section to be used in Miami Dade County and other areas where allowed by the Authority Having Jurisdiction (AHJ).

This NOA shall not be valid after the expiration date stated below. The Miami-Dade County Product Control Section (In Miami Dade County) and/or the AHJ (in areas other than Miami Dade County) reserve the right to have this product or material tested for quality assurance purposes. If this product or material fails to perform in the accepted manner, the manufacturer will incur the expense of such testing and the AHJ may immediately revoke, modify, or suspend the use of such product or material within their jurisdiction. RER reserves the right to revoke this acceptance, if it is determined by Miami-Dade County Product Control Section that this product or material fails to meet the requirements of the applicable building code.

This product is approved as described herein, and has been designed to comply with the Florida Building Code, including the High Velocity Hurricane Zone.

DESCRIPTION: Series Atlas Plus 5000 Aluminum Sliding Glass Door w/wo reinforcements -LMI

APPROVAL DOCUMENT: Drawing No. **13-186** (former 12-014), titled "Atlas Plus Series 5000 Aluminum Sliding Glass Door", sheets 1, 2, 2.1, 2.2, 3,4, 5, 6, 6.1, 7, 8, 8.1, 9, 9.1, 10, 10.1, 11 through 13 of 13, prepared by EngCo. Inc., dated 12/28/12 and last revised on SEP 23, 2014, signed and sealed by Pedro De Figueiredo, P.E., bearing the Miami-Dade County Product Control Revision stamp with the Notice of Acceptance number and expiration date by the Miami-Dade County Product Control Section.

MISSILE IMPACT RATING: Large and Small Missile Impact Resistant

Limitations:

1. The frame area of alternate size unit shall not exceed the frame area of tested approved unit per FBC **2411.3.2.4** (i) (1).
2. See sheets **1**, **2**, **2.1** and **2.2** for Design Pressure, sizes, configurations, reinforcements, glass types and threshold types (sheets 6, 6.1 & 10.1). See sheets **8**, **8.1**, **9** and **9.1** for anchor capacity table. Lower design pressure shall control.
3. See table **2A** (sheet 2.2) for Narrow Stile pocket and detail **3P** in sheet **3** for pocket jamb installation.

LABELING: Each unit shall bear a permanent label with the manufacturer's name or logo, city, state and series and following statement: "Miami-Dade County Product Control Approved", noted herein.

RENEWAL of this NOA shall be considered after a renewal application has been filed and there has been no change in the applicable building code negatively affecting the performance of this product.

TERMINATION of this NOA will occur after the expiration date or if there has been a revision or change in the materials, use, and/or manufacture of the product or process. Misuse of this NOA as an endorsement of any product, for sales, advertising or any other purposes shall automatically terminate this NOA. Failure to comply with any section of this NOA shall be cause for termination and removal of NOA.

ADVERTISEMENT: The NOA number preceded by the words Miami-Dade County, Florida, and followed by the expiration date may be displayed in advertising literature. If any portion of the NOA is displayed, then it shall be done in its entirety.

INSPECTION: A copy of this entire NOA shall be provided to the user by the manufacturer or its distributors and shall be available for inspection at the job site at the request of the Building Official.

This NOA **revises NOA #13-0423.12** and consists of this page 1 and evidence pages E-1 & E-2, as well as approval document mentioned above.

The submitted documentation was reviewed by **Ishaq I. Chanda, P.E.**

MIAMI-DADE COUNTY APPROVED

Jupiter Glass specialties Inc., dba
South Eastern Door Company

NOTICE OF ACCEPTANCE: EVIDENCE SUBMITTED

A. DRAWINGS (submitted under files # referenced below)

1. Manufacturer's die drawings and sections.
2. Drawing No. **13-186** (former 12-014), titled "Atlas Plus Series 5000 Aluminum Sliding Glass Door", sheets 1, 2, 2.1, 2.2, 3,4, 5, 6, 6.1, 7, 8, 8.1, 9, 9.1, 10, 10.1, 11 through 13 of 13, prepared by EngCo. Inc., dated 12/28/12 and last revised on SEP 23, 2014, signed and sealed by Pedro De Figueiredo, P.E.

B. TESTS

1. Test reports on: 1) Air Infiltration Test, per FBC, TAS 202–94
   2) Uniform Static Air Pressure Test, Loading per FBC, TAS 202–94
   3) Water Resistance Test, per FBC, TAS 202–94
   4) Small Missile Impact Test per FBC, TAS 201–94
   5) Large Missile Impact Test per FBC, TAS 201–94
   6) Cyclic Wind Pressure Loading per FBC, TAS 203–94
   7) Forced Entry Test, per FBC 2411 3.2.1 and TAS 202-94

   along with marked–up drawings and installation diagram of a XXXX Aluminum Pocket Sliding Glass Door, prepared by Black Water Testing, Inc., Test Report No.**BT-SED-13-001**, dated AUG 09, 2013, signed & sealed by Yamil Kuri, P. E.
   Note: This test report is revised by ad addendum letter, issued by Black Water Testing Inc., dated SEP 01, 2014.
2. Test reports on: 1) Air Infiltration Test, per FBC, TAS 202–94
   2) Uniform Static Air Pressure Test, Loading per FBC, TAS 202–94
   3) Water Resistance Test, per FBC, TAS 202–94
   4) Small Missile Impact Test per FBC, TAS 201–94
   5) Large Missile Impact Test per FBC, TAS 201–94
   6) Cyclic Wind Pressure Loading per FBC, TAS 203–94
   7) Forced Entry Test, per FBC 2411 3.2.1 and TAS 202-94

   along with marked–up drawings and installation diagram of an Aluminum Sliding Glass Door, prepared by Hurricane Test Laboratory, Inc., Test Report No.'s **HTL 0151–0604–09** and **HTL 0151–0801–08,** dated 09/09 thru 02/12/09, signed & sealed by Vinu J. Abraham, P. E. (submitted under files # **13-0423.12, # 12-0223.03, #09-1105.02)**
3. Test reports on 1) Air Infiltration Test, per FBC, TAS 202-94
   2) Uniform Static Air Pressure Test, Loading per FBC, TAS 202-94
   3) Water Resistance Test, per FBC, TAS 202-94
   4) Large Missile Impact Test per FBC, TAS 201-94
   5) Cyclic Wind Pressure Loading per FBC, TAS 203-94
   6) Forced Entry Test, per FBC 2411 3.2.1 and TAS 202-94

   Along with marked-up drawings and installation diagram of an Aluminum Sliding Glass Door, prepared by Hurricane Test Laboratory, Inc., Test Report No. HTL 0151-0909-01 dated 9/7/01, HTL 0151-1105-01 dated 12/12/01, HTL 0151-1209-02 dated 12/12/02 and HTL 0151-0305-06 dated 06/26/2006, all signed and sealed by Vinu J. Abraham, P.E. (submitted under files **#08-0514.09** and **#05-0913.03)**

Ishaq I. Chanda

Ishaq I. Chanda, P.E.
Product Control Examiner
NOA No. 13-1105.12
Expiration Date: June 26, 2018
Approval Date: October 16, 2014

NOTICE OF ACCEPTANCE: EVIDENCE SUBMITTED

C. CALCULATIONS

1. Anchor verification calculation, complying w/ FBC 2014, prepared by EngCo. Inc., dated 10/24/13, 05/08/14 and last revised on June 26, 2014, signed and sealed by Pedro De Figueiredo, P.E.
2. Glazing complies with ASTME-1300-02 &-04.

D. QUALITY ASSURANCE

1. Miami Dade Department of Regulatory and Economic Resources (RER).

E. MATERIAL CERTIFICATIONS

1. Notice of Acceptance No. **11-0624.02** issued to E.I. Dupont De Nemours & CO., Inc. for "DuPont SentryGlas ® interlayer", expiring on 01/14/2017.

F. STATEMENTS

1. Statement letter of compliance w/ FBC-2014 and FBC 2010, dated 05/08/14, prepared by EngCo, Inc., signed and sealed by Pedro De Figueiredo, P.E.
2. Statement letter of compliance and of no financial interest, dated 09/05/06, signed and sealed by Pedro De Figueiredo, P.E.
3. Active status listing of incorporation with Florida Department of State of Jupiter Glass Specialties, Inc., since 03/17/1980.
4. Active status listing of fictitious name with Florida Department of State of Southeastern door Company, since 06/16/2010.

G. OTHER

1. This NOA **revises & renews # #13-0423.12**, expiring June 26, 2018.
2. Die Dwg#050475 verified and marked-up by Black Water Testing.
3. Southeastern Die Dwgs #050457, 050192, FS-04297, GAS-49152 and 05455, provided by manufacturer.

Ishaq I. Chanda

Ishaq I. Chanda, P.E.
Product Control Examiner
NOA No. 13-1105.12
Expiration Date: June 26, 2018
Approval Date: October 16, 2014

GENERAL NOTES:

FLORIDA BUILDING CODE 2010 / 2014 (5th ed) HVHZ
LARGE & SMALL MISSILE IMPACT RATED

1- CODE: THIS PRODUCT HAS BEEN TESTED AND DESIGNED IN ACCORDANCE WITH THE FBC 2010 / 2014 INCLUDING THE HIGH VELOCITY HURRICANE ZONE (HVHZ).

2- DEFINITION: THIS PRODUCT IS AN ALUMINUM SLIDING GLASS DOOR DESIGNED, CONSTRUCTED AND TESTED PROVIDING PROTECTION FROM HURRICANE FORCE WINDS AND WIND BORNE DEBRIS (LARGE MISSILE) WITHIN THE ALLOWABLE DESIGNED PRESSURES AND LIMITATIONS STATED IN THIS APPROVAL. INSTALLATION OF HURRICANE PROTECTION DEVICES IS NOT REQUIRED.

3- POSTING: PRODUCT SHALL BE LABELED AS PER FBC 2010 SECTION 1715.5.2.1 OR FBC 2014 SECTION 1710.5.1.

"JUPITER GLASS SPECIALTIES, INC DBA
SOUTHEASTERN DOOR COMPANY - JUPITER - FLORIDA
SERIES 5000 ATLAS PLUS SLIDING GLASS DOOR
LARGE & SMALL MISSILE IMPACT RATED
MIAMI-DADE PRODUCT CONTROL APPROVED

4- LOADS: DESIGNED LOAD CALCULATED BASED ON THE ASCE 7-10 AND PROVIDED BY A PROFESSIONAL ARCHITECT OR ENGINEER FOR EACH SPECIFIC PROJECT. THE CALCULATED DESIGNED PRESSURE MUST NOT EXCEED THE ALLOWABLE PRESSURES HERE IN SPECIFIED. THE DESIGN PRESSURES, AS DETERMINED FROM ASCE 7-10, ARE PERMITTED TO BE MULTIPLE BY 0.6

5- MATERIAL: ALL ALUMINUM PARTS TO BE 6063-T6 ALLOY OR AS NOTED AND GLAZING TO BE LAMINATED IMPACT GLASS AS SPECIFIED ON THIS APPROVAL.

6- FASTENERS: ASSEMBLY SCREWS AND ANCHORS SHALL BE AS SPECIFIED IN THE CURRENT SET OF DRAWINGS. INSTALLATION AND LOADS AS PER THIS APPROVAL. ANCHOR SPACING AND LOADS MUST NOT EXCEED THE MAXIMUM LIMITS SPECIFIED BY THIS APPROVAL.

7- USE: IT SHALL BE THE RESPONSIBILITY OF THE CONTRACTOR, ARCHITECT OR ENGINEER OF RECORD TO VERIFY THE FOLLOWING:

7.1- THE STABILITY OF THE STRUCTURE WHERE THE PRODUCT IS TO BE ATTACHED INSURING PROPER ANCHORAGE.

7.2- THE SITE SPECIFIC PROJECT CRITERIA, SUCH AS BUT NOT LIMITED TO, LOCAL CODE REQUIREMENTS, DESIGNED PRESSURES ETC.

7.3- THAT THIS APPROVAL IS ADEQUATE TO THE SPECIFIC PROJECT.

8- DISSIMILAR MATERIALS: WHERE ALUMINUM IS IN CONTACT OR FASTENED TO DISSIMILAR MATERIALS, INCLUDING BUT NOT LIMITED TO STEEL, INSTALLATION SHALL MEET THE REQUIREMENTS OF CHAPTER M.7 OF THE ALUMINUM DESIGN MANUAL 2010.

9- DOOR UNIT SELECTION PROCEDURE AND INSTRUCTIONS TO USE THIS DRAWING TO VERIFY DOOR ADEQUACY PRESSURE

STEP 1 - SHEET 1 GENERAL NOTE 4: DETERMINE PROJECT DESIGNED PRESSURE (DP) AS INDICATED.

STEP 2 - SHEET 2, 2.1 OR 2.2: SELECT ALLOWABLE PRESSURE USING TABLES 1, 1A, 2 OR 2A, FUNCTION OF DOOR CONFIGURATIONS, TYPE OF REINFORCEMENT, SECTIONS AND THRESHOLD TYPES.

STEP 3 - SHEET 8, 8.1, 9 OR 9.1: SELECT FRAME ANCHORING ALLOWABLE DESIGN PRESSURE CAPACITY FROM TABLES 3 (2 TRACK) OR 4 (3, 4 OR 5 TRACK) FUNCTION OF ANCHORAGE TYPE, TRACK TYPE AND DOOR SIZES.

STEP 4 - THE LOWEST ALLOWABLE DESIGNED PRESSURE FROM STEP 2 AND 3 SHALL APPLY TO THE ENTIRE SYSTEM AND MUST BE GREATER OR EQUAL THAN THE PROJECT DESIGN PRESSURE (DP) FROM STEP 1

DOOR ELEVATIONS WITH OPERABLE AND FIXED PANELS CONFIGURATIONS

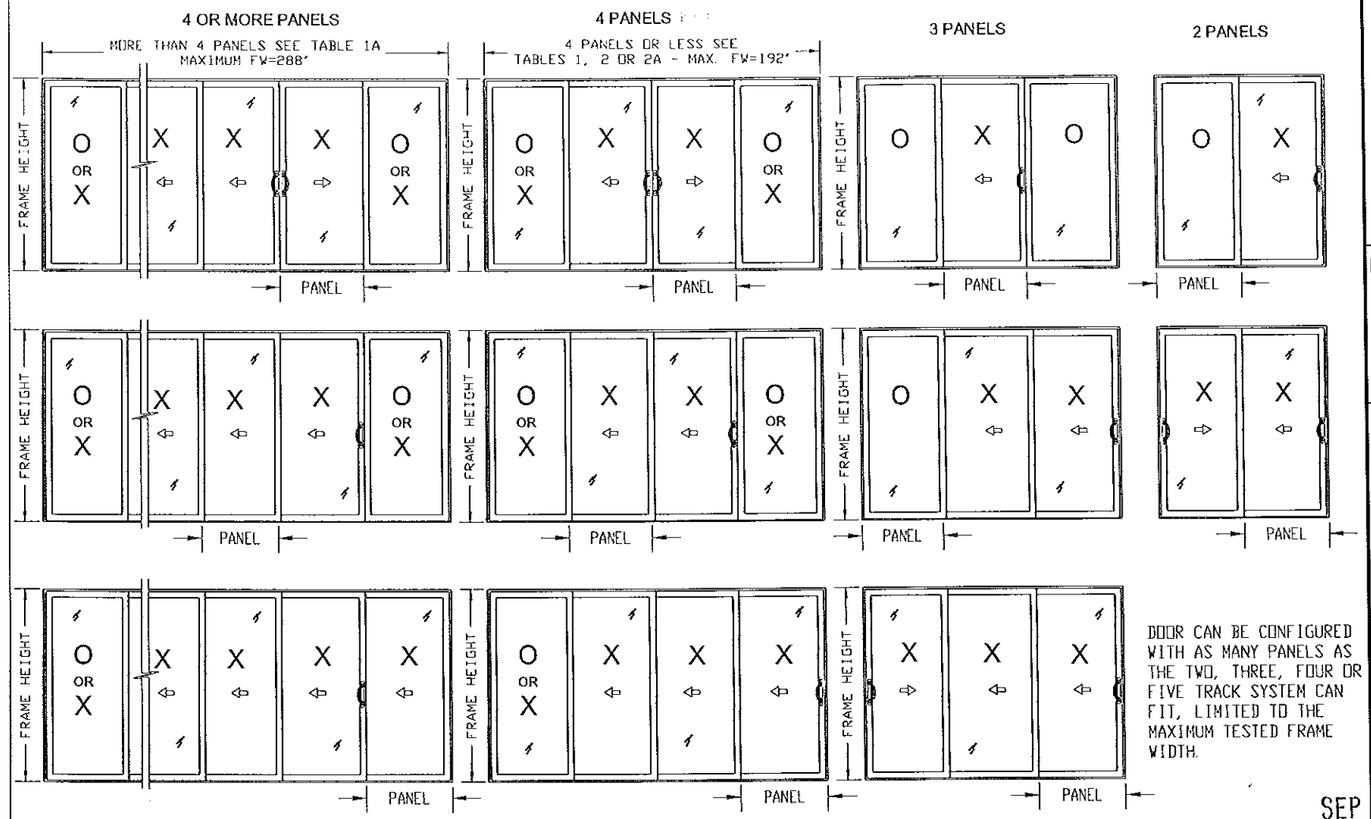

DOOR CAN BE CONFIGURED WITH AS MANY PANELS AS THE TWO, THREE, FOUR OR FIVE TRACK SYSTEM CAN FIT, LIMITED TO THE MAXIMUM TESTED FRAME WIDTH.

SEP 23 2014

DESIGN RATINGS:

SHEET	TABLE	DESCRIPTION
2	1	DOOR RATING NON-POCKET, W/ 4 OR LESS PANELS AND W/ REINF.
	2	DOOR RATING NON-POCKET, W/ 4 OR LESS PANELS AND W/OUT REINF.
2.1	1A	DOOR RATING NON-POCKET, W/ 4 OR MORE PANELS AND W/ REINF.
2.2	2A	DOOR RATING W/ POCKET, W/ 4 OR LESS PANELS AND W/OUT REINF.
8	3	RATING FOR ANCHORAGE INTO 2 TRACK
8.1	-	REDUCED RATING FOR ANCHORAGE INTO 2 TRACK WITH PROPERLY SECURED 1X BUCK
9	4	RATING FOR ANCHORAGE INTO 3, 4 & 5 TRACKS
9.1	-	REDUCED RATING FOR ANCHORAGE INTO 3, 4 & 5 TRACKS W/ PROPERLY SECURED 1X BUCK

NOTES:
1- DESIGN RATING WILL BE THE LOWEST PRESSURE FROM APPLICABLE TABLES (SEE SELECTION PROCEDURE)
2- PLEASE REFER TO SHEET 6 AND 6.1 FOR FURTHER POSITIVE PRESSURE LIMITATION DUE TO THRESHOLD HEIGHT.

TABLE OF CONTENTS:

SHEET	DESCRIPTION	SHEET	DESCRIPTION
1	GENERAL NOTES, TYPICAL ELEVATIONS	7	HEADER FRAMING ANCHORAGE DETAIS
2	DESIGN RATING TABLES 1 AND 2	8	FRAMING CLUSTER ANCHORAGE RATING AND SCHEDULE
2.1	DESIGN RATING TABLES 1A	8.1	FRAMING CLUSTER ANCHORAGE RATING WITH 1X BUCK
2.2	DESIGN RATING TABLES 2A	9	FRAMING PAIRED CLUSTER ANCHORAGE RATING AND SCHEDULE
3	SECTION DETAILS	9.1	FRAMING PAIRED CLUSTER ANCHORAGE RATING WITH 1X BUCK
4	SECTION DETAILS & GLAZING DETAILS	10 & 10.1	DOOR FRAMING COMPONENTS
5	JAMB FRAMING ANCHORAGE DETAILS	11	DOOR SASH COMPONENTS AND BILL OF MATERIALS
6	SILL FRAMING ANCHORAGE DETAILS	12	DOOR HARDWARE
6.1	ALTERNATE SILL FRAMING ANCHORAGE DETAILS	13	DOOR & FRAMING ASSEMBLY

MANUFACTURER:

SOUTHEASTERN
Manufacturers of Impact Resistant Sliding Glass Doors

1505 COMMERCE LANE
JUPITER, FLORIDA 33458
PHONE: (561) 746-5493
FAX: (561) 575-1826

PRODUCT:
ATLAS PLUS
SERIES 5000 ALUMINUM
SLIDING GLASS DOOR
LARGE MISSILE IMPACT

Engineering:
EngCo Inc.
CA 8116
5595 Orange Dr. 201
Davie, Fl. 33314
Tel: (954) 585-0304
Fax: (954) 585-5105
ENGCO@AOL.COM

PEDRO M. DE FIGUEIREDO
No. 52609
STATE OF FLORIDA
PROFESSIONAL ENGINEER

Engineer Seal
Pedro De Figueiredo
PE 52609

MIAMI-DADE BCCO:

PRODUCT REVISED
as complying with the Florida Building Code
Acceptance No. 13-1105.12
Expiration Date JUNE 26, 2018
By Ishwar I. Chand
Miami Dade Product Control

Date: 12/28/12
Scale: NA
Design by: PPMF

Drawing Number
13-186

TYPICAL ELEVATION AND DESIGNED PRESSURES
NON POCKET DOOR - 4 OR LESS PANELS

NOTATION:

PW= DW / NUMBER OF PANELS
PW: DOOR PANEL WIDTH
DW: OVERALL DOOR WIDTH (MAX. 192")
n: NUMBER OF DOOR PANELS
DLO: DAYLITE OPENING
FH: FRAME HEIGHT (MAX. 108")

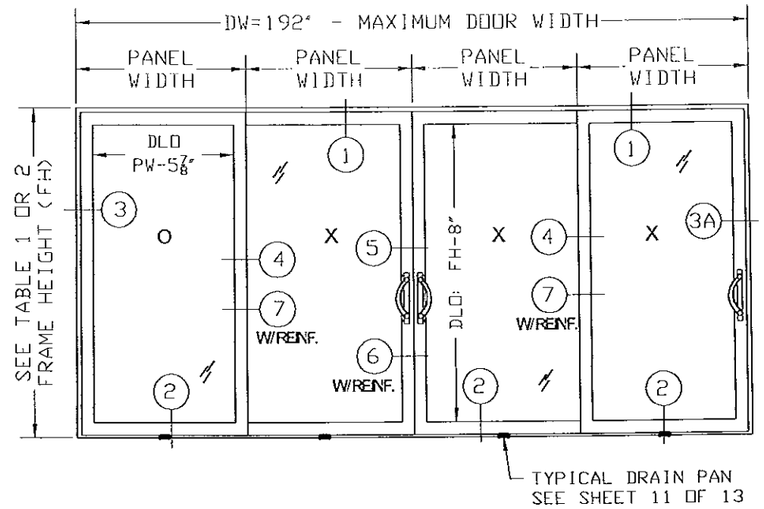

DLO WIDTH: PANEL WIDTH - 5 7/8"
DLO HEIGHT: FRAME HEIGHT - 8"

REFER TO SHEET 1, NOTE 9 FOR SELECTION PROCEDURE
REFER TO SHEETS 3 AND 4 FOR SECTION DETAILS
REFER TO SHEETS 8 AND 9 FOR ANCHORAGE LAY-OUT AND CAPACITY

TABLE 1
DOOR WITH LESS OR EQUAL 4 PANELS
DOOR WITH REINFORCEMENT - SECTIONS 7 AND 6

PANEL WIDTH	FRAME HEIGHT	PD RATING (+)**	PD RATING (-)	GLASS TYPE
30	80*	90.0	100.0	A B
	84	90.0	100.0	A B
	96	90.0	100.0	A B
	100	90.0	100.0	A B
	104	90.0	100.0	A B
	108	90.0	100.0	A B
36	80*	90.0	100.0	A B
	84	90.0	100.0	A B
	96	90.0	100.0	A B
	100	90.0	100.0	A B
	104	98.4	98.4	A B
	108	90.1	90.1	A B
42	80*	90.0	100.0	A B
	84	90.0	100.0	A B
	96	90.0	98.7	A B
	100	90.0	92.8	A B
	104	84.9	84.9	A B
	108	78.5	78.5	A B
48	80*	90.0	100.0	A B
	84	90.0	100.0	A B
	88	90.0	98.2	A B
	92	90.0	93.9	A B
	96	90.0	90.0	A B
	100	70.0	83.1	A
	104	70.0	75.9	A
	108	70.0	70.0	A
54	80*	70.0	92.0	A B
	84	70.0	91.4	A B
	88	70.0	87.3	A
	96	70.0	70.0	A
60	80*	70.0	84.4	A
	84	70.0	77.5	A
	86	70.0	70.0	A

NOTES:
1- PANEL WIDTH (PW) IN INCHES
2- FRAME HEIGHT (FH) IN INCHES
3- PRESSURE RATING IN PSF
4- ** 2" THRESHOLD - MAX. +50 PSF SEE SHEET 6
5- SEE SHEET 4 FOR GLASS TYPE

* FBC 2010/2014 - 1008.1.1 - DOORS PART OF THE REQUIRED MEANS OF EGRESS TO BE LIMITED TO MINIMUM 82" FRAME HEIGHT IN ORDER TO PROVIDE 80" DOOR OPENING

EXAMPLE: TABLE 1

DW= 192" - FH= 96" (W/ REINFORCEMENT)
MODEL: OX-XO - n= 4 PANELS
PW= 192/4= 48" // FRAME HEIGHT= 96"

ALLOWABLE DESIGN DESIGNED RATING
PD= +90, -90 PSF
PD= +50, -90 PSF (2" THRESHOLD)

EXAMPLE: TABLE 2

DW= 192" - FH= 96" (W/O REINFORCEMENT)
MODEL: OX-XO - n= 4 PANELS
PW= 192/4= 48" // FRAME HEIGHT= 96"

ALLOWABLE DESIGN DESIGNED RATING
PD= +70, -70 PSF
PD= +50, -70 PSF (2" THRESHOLD)

TABLE 2
DOOR WITH LESS OR EQUAL 4 PANELS
DOOR WITHOUT REINFORCEMENT - SECTIONS 4 AND 5

PANEL WIDTH	FRAME HEIGHT	PD RATING (+)**	PD RATING (-)	GLASS TYPE
30	80*	70.0	70.0	A B
	84	70.0	70.0	A B
	96	70.0	70.0	A B
	100	70.0	70.0	A B
	104	70.0	70.0	A B
	108	65.1	65.1	A B
36	80*	70.0	70.0	A B
	84	70.0	70.0	A B
	96	70.0	70.0	A B
	100	70.0	70.0	A B
	104	64.2	64.2	A B
	108	55.0	55.0	A B
42	80*	70.0	70.0	A B
	84	70.0	70.0	A B
	96	70.0	70.0	A B
	100	65.9	65.9	A B
	104	56.0	56.0	A B
	108	47.9	47.9	A B
48	80*	70.0	70.0	A B
	84	70.0	70.0	A B
	88	70.0	70.0	A B
	92	70.0	70.0	A B
	96	70.0	70.0	A B
54	80*	70.0	70.0	A B
	84	70.0	70.0	A B

NOTES:
1- PANEL WIDTH (PW) IN INCHES
2- FRAME HEIGHT (FH) IN INCHES
3- PRESSURE RATING IN PSF
4- ** 2" THRESHOLD - MAX. +50 PSF SEE SHEET 6
5- SEE SHEET 4 FOR GLASS TYPE

MANUFACTURER:
SOUTHEASTERN
Manufacturers of Impact Resistant Sliding Glass Doors
1505 COMMERCE LANE
JUPITER, FLORIDA 33458
PHONE: (561) 746-5493
FAX: (561) 575-1826

PRODUCT:
ATLAS PLUS
SERIES 5000 ALUMINUM SLIDING GLASS DOOR LARGE MISSILE IMPACT

Engineering:
EngCo Inc.
CA 8116
5595 Orange Dr. 201
Davie, Fl. 33314
Tel. (954) 585-0304
Fax (954) 585-5806
ENGCO@AOL.COM

PEDRO DE FIGUEIREDO No. 52609 STATE OF FLORIDA PROFESSIONAL ENGINEER

SEP 23 2014

Engineer Seal
Pedro De Figueiredo
PE 52609

MIAMI-DADE BCCO:

PRODUCT REVISED
as complying with the Florida Building Code
Acceptance No. 13-1105.12
Expiration Date 6/26/18
By Miami Dade Product Control

Date: 12/28/12
Scale: NA
Design by: PPMF

Drawing Number
13-186

TYPICAL ELEVATION AND DESIGNED PRESSURES
NON POCKET DOOR - 4 OR MORE PANELS

TABLE 1A
DOOR WITH MORE THAN 4 PANELS
DOOR WITH REINFORCEMENT - SECTIONS 7 AND 6

PANEL WIDTH	FRAME HEIGHT	PD RATING (+)**	PD RATING (-)	GLASS TYPE
30	80*	90.0	100.0	A B
	84	90.0	100.0	A B
	96	90.0	99.6	A B
	100	89.1	89.1	A B
	104	75.9	75.9	A B
	108	65.1	65.1	A B
36	80*	90.0	100.0	A B
	84	90.0	100.0	A B
	96	86.2	86.2	A B
	100	75.4	75.4	A B
	104	64.2	64.2	A B
	108	55.0	55.0	A B
42	80*	90.0	96.0	A B
	84	90.0	91.4	A B
	96	76.8	76.8	A B
	100	65.9	65.9	A B
	104	56.0	56.0	A B
	108	47.9	47.9	A B
48	80*	81.9	81.9	A B
	84	80.0	80.0	A B
	88	76.4	76.4	A B
	92	73.0	73.0	A B
	96	70.0	70.0	A B
54	80*	72.8	72.8	A B
	85	70.3	70.3	A B

NOTES:
1- PANEL WIDTH (PW) IN INCHES
2- FRAME HEIGHT (FH) IN INCHES
3- PRESSURE RATING IN PSF
4- ** 2" THRESHOLD - MAX. +50 PSF SEE SHEET 6
5- SEE SHEET 4 FOR GLASS TYPE

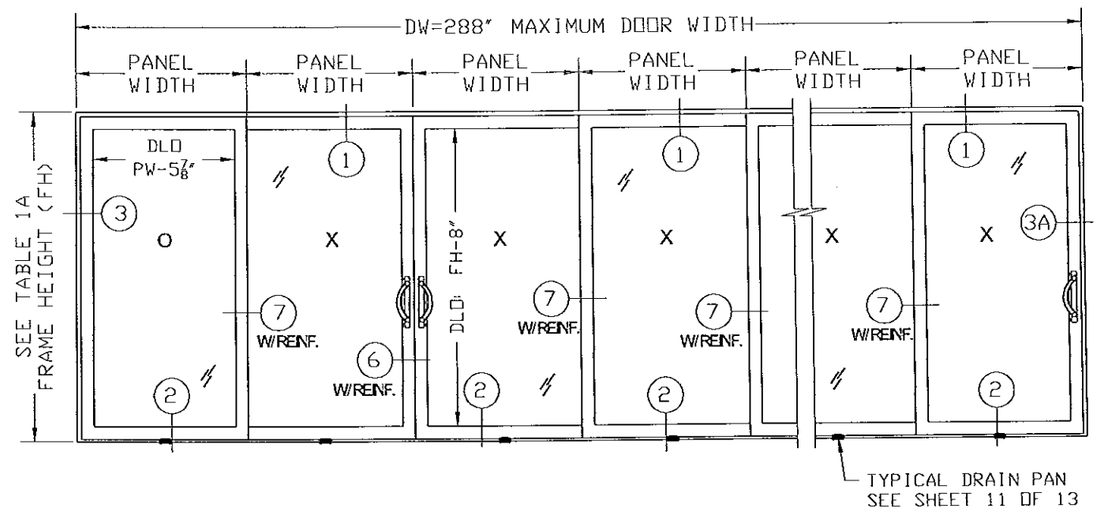

DLO WIDTH: PANEL WIDTH - 5 7/8"
DLO HEIGHT: FRAME HEIGHT - 8"

EXAMPLE: TABLES 1A

DW= 216" - FH= 96"
MODEL: OXX-XXO - n= 6 PANELS
PW= 216/6= 36" // FRAME HEIGHT= 96"

ALLOWABLE DESIGN DESIGNED RATING
PD= +86.2, -86.2 PSF
PD= +50, -86.2 PSF (2" THRESHOLD)

NOTATION:

PW= DW / NUMBER OF PANELS
PW: DOOR PANEL WIDTH
DW: OVERALL DOOR WIDTH (MAX. 288")
n: NUMBER OF DOOR PANELS
DLO: DAYLITE OPENING
FH: FRAME HEIGHT (MAX. 108")

* FBC 2010/2014 - 1008.1.1 - DOORS PART OF THE REQUIRED MEANS OF EGRESS TO BE LIMITED TO MINIMUM 82" FRAME HEIGHT IN ORDER TO PROVIDE 80" DOOR OPENING

REFER TO SHEET 1, NOTE 9 FOR SELECTION PROCEDURE
REFER TO SHEETS 3 AND 4 FOR SECTION DETAILS
REFER TO SHEETS 8 AND 9 FOR ANCHORAGE LAY-OUT AND CAPACITY

MANUFACTURER:
SOUTHEASTERN
Manufacturers of Impact Resistant Sliding Glass Doors
1505 COMMERCE LANE
JUPITER, FLORIDA 33458
PHONE: (561) 746-5493
FAX: (561) 575-1826

PRODUCT:
ATLAS PLUS
SERIES 5000 ALUMINUM SLIDING GLASS DOOR
LARGE MISSILE IMPACT

Engineering:
EngCo Inc.
CA 8116
5595 Orange Dr. 201
Davie, Fl. 33314
Tel. (954) 585-0304
Fax (954) 585-5306
ENGCO@AOL.COM

PEDRO DE FIGUEIREDO
No. 52609
STATE OF FLORIDA
PROFESSIONAL ENGINEER

SEP 23 2014

Engineer Seal
Pedro De Figueiredo
PE 52609

MIAMI-DADE BCCO:

PRODUCT REVISED
as complying with the Florida Building Code
Acceptance No. 13-1105.12
Expiration Date 6/26/18
By Ishmael Chang
Miami Dade Product Control

Date: 12/28/12
Scale: NA
Design by: PPMF

Drawing Number
13-186

SHEET
2.1 of 13

TYPICAL ELEVATION AND DESIGNED PRESSURES
NARROW STILE POCKET (3P) OR NON POCKET JAMB (3A OR 3)

TABLE 2A

DOOR WITH LESS OR EQUAL 4 PANELS AND POCKET
DOOR WITHOUT REINFORCEMENT - SECTIONS 4A, 5 AND 3P

PANEL WIDTH	FRAME HEIGHT	PD RATING (+) **	PD RATING (-)	GLASS TYPE
30	80*	65.0	71.5	A B
	84	65.0	71.5	A B
	96	65.0	71.5	A B
36	80*	65.0	71.5	A B
	84	65.0	71.5	A B
	96	61.5	67.7	A B
42	80*	65.0	71.5	A B
	84	65.0	71.5	A B
	96	54.9	60.3	A B
48	80*	60.0	66.0	A B
	84	57.1	62.9	A B
	88	54.5	60.0	A B
	92	55.2	57.4	A B
	96	50.0	55.0	A B

NOTES:
1- PANEL WIDTH (PW) IN INCHES
2- FRAME HEIGHT (FH) IN INCHES
3- PRESSURE RATING IN PSF
4- POCKET DOORS POSITIVE PRESSURES WITH 3-1/4" THRESHOLD SILL TO BE LIMITED TO MAXIMUM +50 PSF. (**) (SEE SHEET 6.1)
5- POCKET DOORS ABOVE POSITIVE PRESSURE APPLICABLE ONLY FOR INSTALLATIONS COMPLYING WITH CASE 1 ILLUSTRATION Z ON SHEET 6.1.
6- SEE SHEET 4 FOR GLASS TYPE

NOTATION:

PW= DW / NUMBER OF PANELS
PW: DOOR PANEL WIDTH
DW: OVERALL DOOR WIDTH (MAX. 192")
n: NUMBER OF DOOR PANELS
DLO: DAYLITE OPENING
FH: FRAME HEIGHT (MAX. 96")

REFER TO SHEET 1, NOTE 9 FOR SELECTION PROCEDURE

SEE SHEETS 8 AND 9 FOR ANCHORAGE LAY-OUT AND CAPACITY

DLO WIDTH: PANEL WIDTH - 5 7/8"
DLO HEIGHT: FRAME HEIGHT - 8"

* FBC 2010/2014 - 1008.1.1 - DOORS PART OF THE REQUIRED MEANS OF EGRESS TO BE LIMITED TO MINIMUM 82" FRAME HEIGHT IN ORDER TO PROVIDE 80" DOOR OPENING

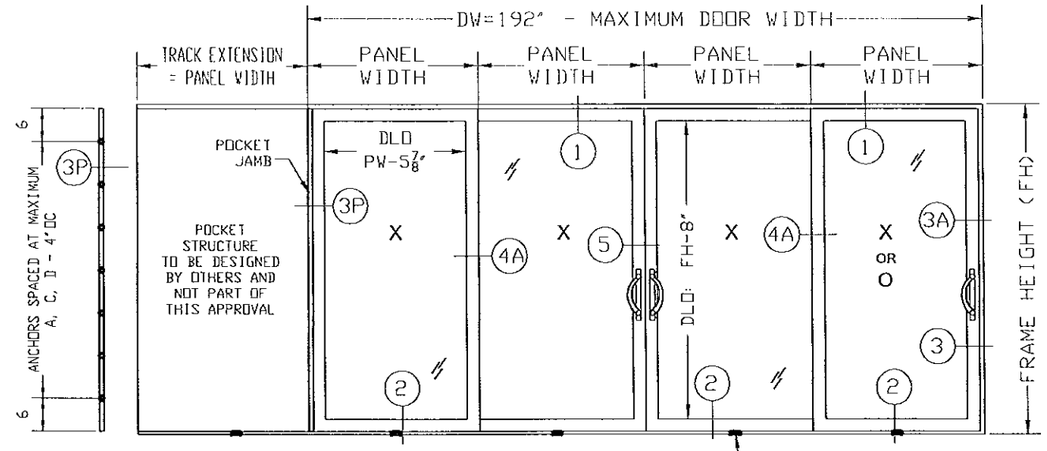

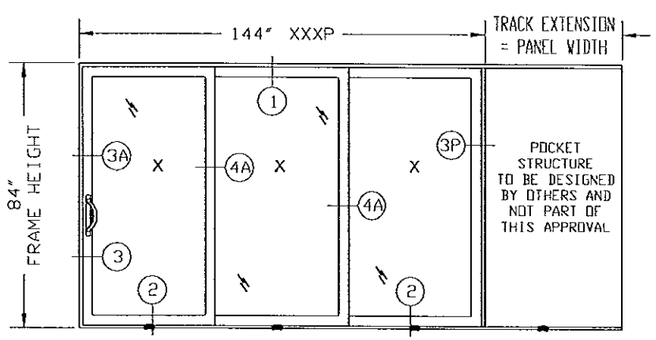

EXAMPLE: TABLES 2A

DW= 144" - FH= 84"
MODEL: XXXP - n= 3 PANELS+1 POCKET JAMB
DM= 144/3= 48" // FRAME HEIGHT= 96"

ALLOWABLE DESIGN DESIGNED RATING
PD= +57.1, -62.9 PSF (NOTE 5)
PD= +50, -62.9 PSF (NOTE 4)

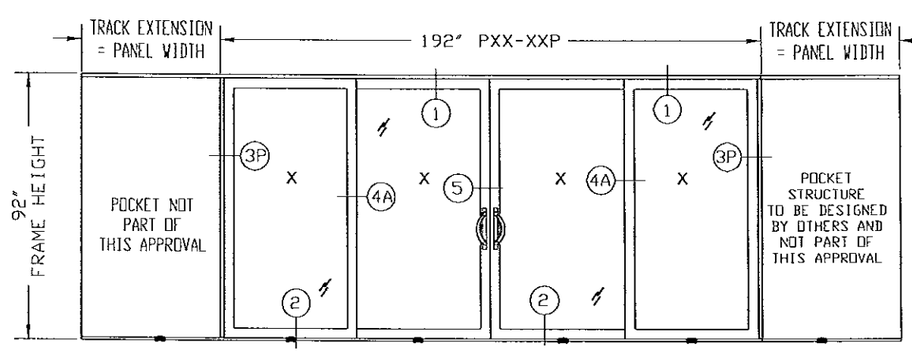

EXAMPLE 2: TABLES 2A
192X96 PXX-XXP - 4 PANELS
PANEL WIDTH= 192/4= 48" // FRAME HEIGHT= 96"
DESIGNED PRESSURE: +50, -55 PSF W/ (2) POCKETS

EXAMPLE: TABLES 2A

DW= 192" - FH= 92"
MODEL: PXX-XXP - n=4 PANELS+ 2 POCKETS
DM= 192/4= 48" // FRAME HEIGHT= 92"

ALLOWABLE DESIGN DESIGNED RATING
PD= +55.2, -57.4 PSF (NOTE 5)
PD= +50, -57.4 PSF (NOTE 4)

DOOR ELEVATIONS WITH OPERABLE, FIXED AND WITH POCKET JAMBS CONFIGURATIONS

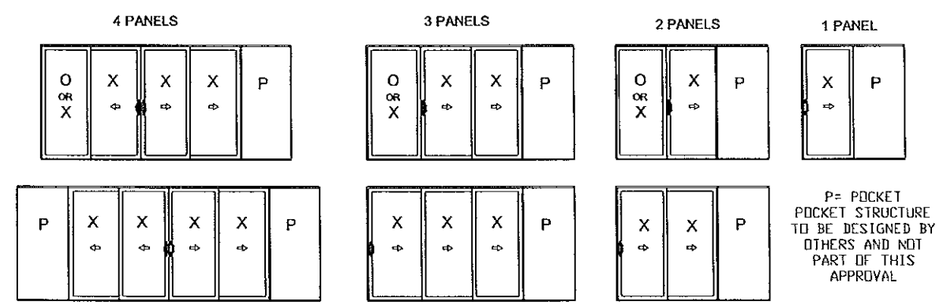

DOORS CAN BE CONFIGURED WITH MAXIMUM 4 PANELS INSTALLED ON A TWO, THREE OR FOUR TRACK SYSTEM. LIMITED TO THE MAXIMUM 192" DOOR WIDTH.

MANUFACTURER:
SOUTHEASTERN
Manufacturers of Impact Resistant Sliding Glass Doors
1505 COMMERCE LANE
JUPITER, FLORIDA 33458
PHONE: (561) 746-5493
FAX: (561) 575-1826

PRODUCT:
ATLAS PLUS
SERIES 5000 ALUMINUM SLIDING GLASS DOOR
LARGE MISSILE IMPACT

Engineering:
EngCo Inc.
CA 8116
5595 Orange Dr. 201
Davie, Fl. 33314
Tel. (954) 585-0304
Fax. (954) 585-5306
ENGCO@AOL.COM

PEDRO M. DE FIGUEIREDO
No. 52609
STATE OF FLORIDA
PROFESSIONAL ENGINEER

SEP 23 2014

Engineer Seal
Pedro De Figueiredo
PE 52609

MIAMI-DADE BCCO:

PRODUCT REVISED
as complying with the Florida Building Code
Acceptance No. 13-1105.12
Expiration Date 6/26/18
By Ishay I. Chavez
Miami Dade Product Control

Date: 12/28/12
Scale: NA
Design by: PPMF

Drawing Number
13-186

SHEET
2.2 of 13

TYPICAL SECTION DETAILS

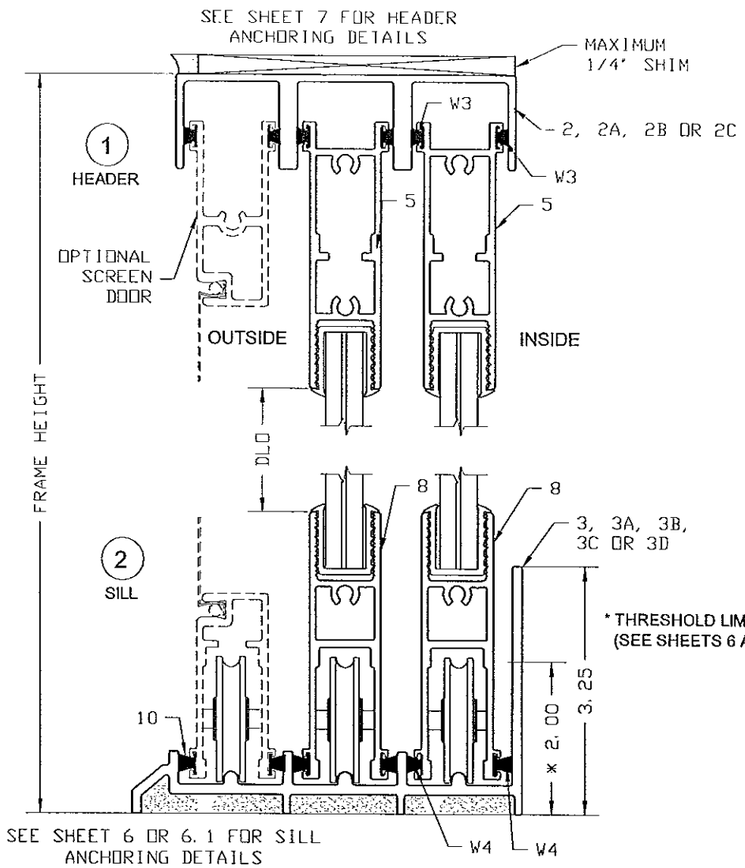

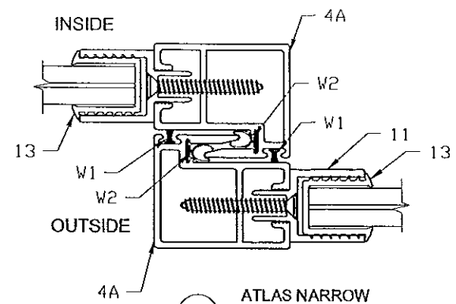

4A ATLAS NARROW INTERLOCK STILE WITHOUT REINF.

LIMITED TO TABLE 2A SEE SHEET 2.2

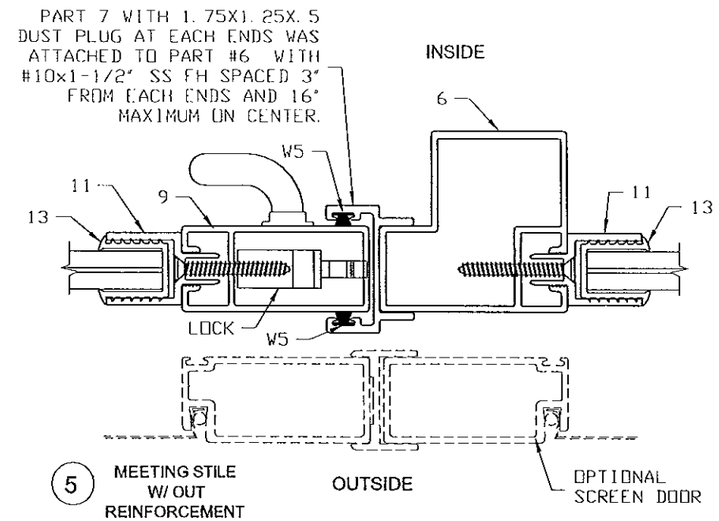

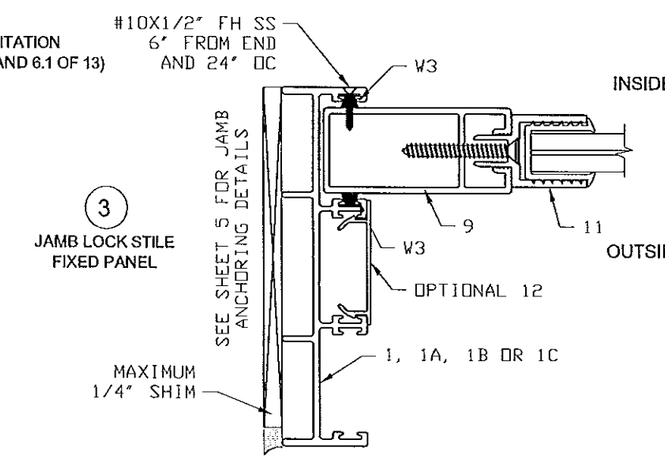

3 JAMB LOCK STILE FIXED PANEL

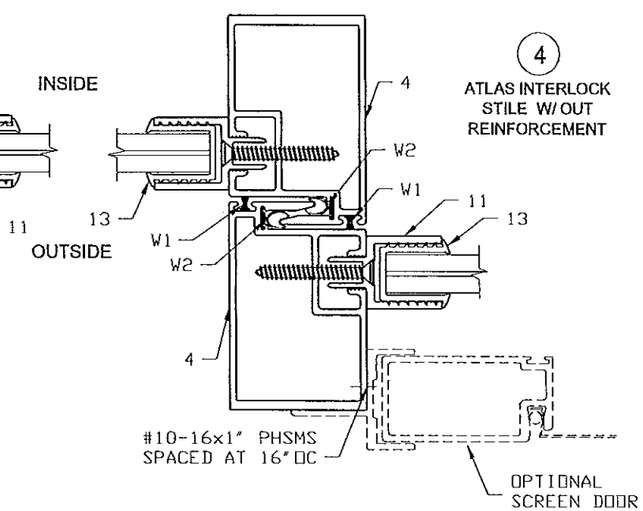

4 ATLAS INTERLOCK STILE W/ OUT REINFORCEMENT

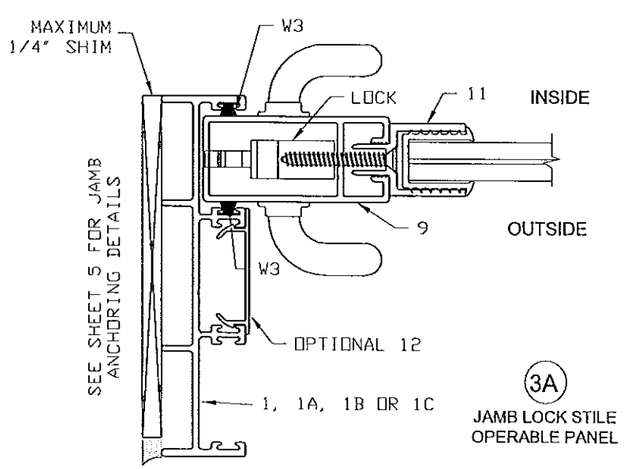

3A JAMB LOCK STILE OPERABLE PANEL

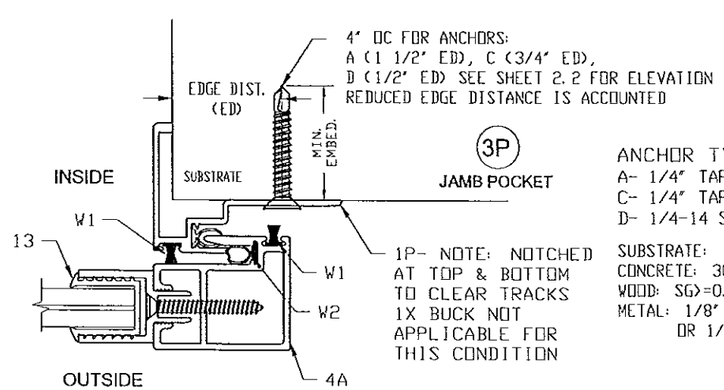

3P JAMB POCKET

1P- NOTE: NOTCHED AT TOP & BOTTOM TO CLEAR TRACKS 1X BUCK NOT APPLICABLE FOR THIS CONDITION

ANCHOR TYPES:
A- 1/4" TAPCON BY ITW WITH 1 3/4" MIN. EMBED. INTO CONCRETE
C- 1/4" TAPCON BY ITW WITH 1 1/2" MIN. EMBEDMENT INTO WOOD
D- 1/4-14 SMS GR 5 INTO METAL STRUCTURES

SUBSTRATE:
CONCRETE: 3000 PSI
WOOD: SG>=0.55
METAL: 1/8" THICK 6063-T6 ALUMINUM OR 1/8" THICK ASTM A36 STEEL

MANUFACTURER:

SOUTHEASTERN
Manufacturers of Impact Resistant Sliding Glass Doors

1505 COMMERCE LANE
JUPITER, FLORIDA 33458
PHONE: (561) 746-5493
FAX: (561) 575-1826

PRODUCT:
ATLAS PLUS
SERIES 5000 ALUMINUM SLIDING GLASS DOOR
LARGE MISSILE IMPACT

Engineering:
EngCo Inc.
CA 8116
5595 Orange Dr. 201
Davie, FL 33314
Tel: (954) 585-0304
Fax: (954) 585-0306
ENGCO@AOL.COM

STATE OF FLORIDA PROFESSIONAL ENGINEER PEDRO DE FIGUEIREDO No. 52609

SEP 23 2014

Engineer Seal
Pedro De Figueiredo
PE 52609

MIAMI-DADE BCCO:

PRODUCT REVISED
as complying with the Florida Buiding Code
Acceptance No. 13-1105.12
Expiration Date 6/26/18
By Ishay L. Chavez
Miami Dade Product Control

Date: 12/28/12
Scale: NA
Design by: PPMF

Drawing Number
13-186

SHEET
3 of 13

TYPICAL SECTION DETAILS

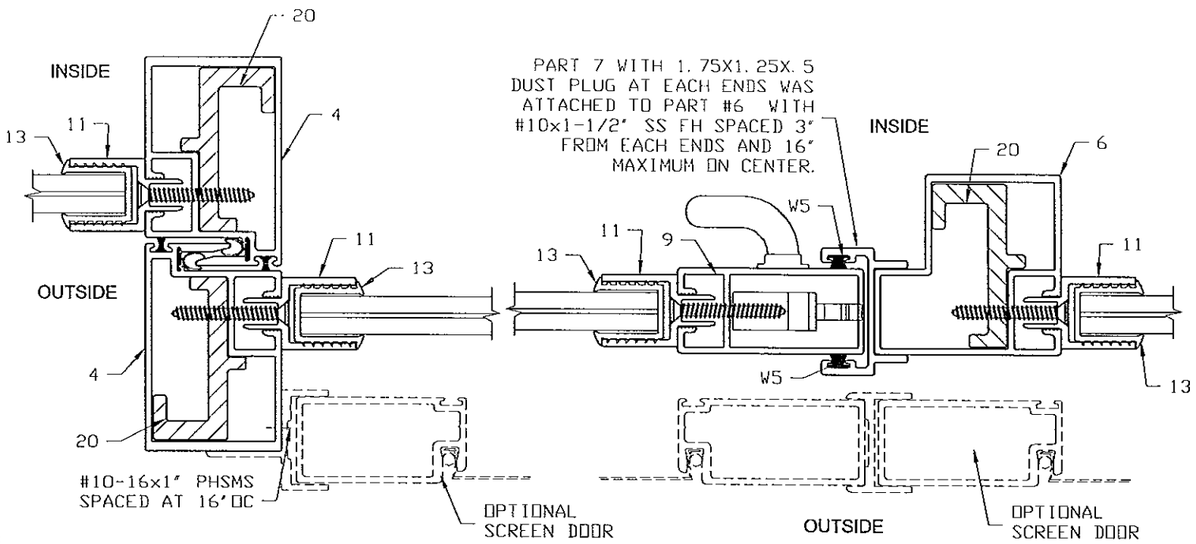

7
ATLAS INTERLOCK
STILE W/ REINF.
(SEE TABLES 1 & 1A)

6
MEETING STILE
W/ REINFORCEMENT
(SEE TABLES 1 & 1A)

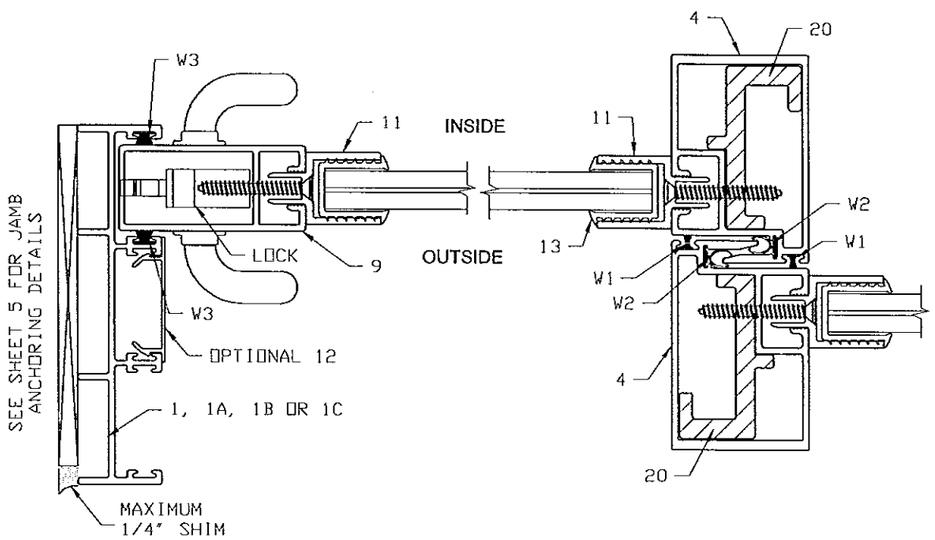

3A
JAMB LOCK STILE
OPERABLE PANEL
(SEE TABLES 1 & 1A)

7
ATLAS INTERLOCK
STILE W/ REINF.
(SEE TABLES 1 & 1A)

GLAZING DETAILS

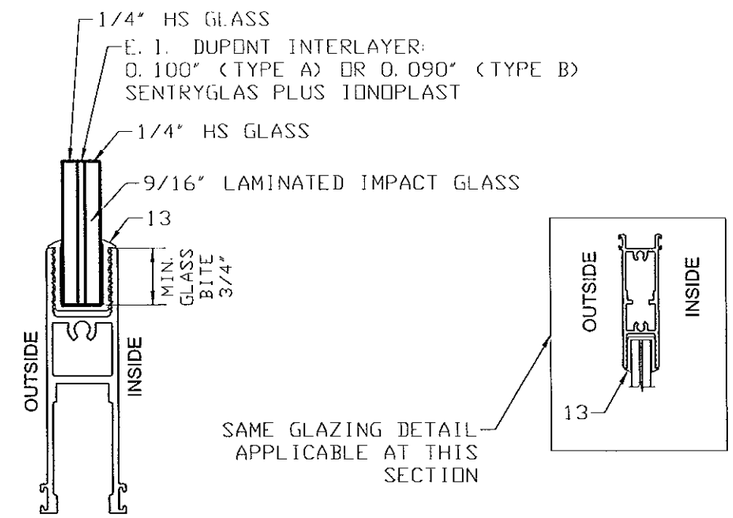

TYPE A GLASS: 9/16" LAMINATED HS WITH 0.100" E. I. DUPONT SENTRYGLAS INTERLAYER
TYPE B GLASS: 9/16" LAMINATED HS WITH 0.090" E. I. DUPONT SENTRYGLAS INTERLAYER

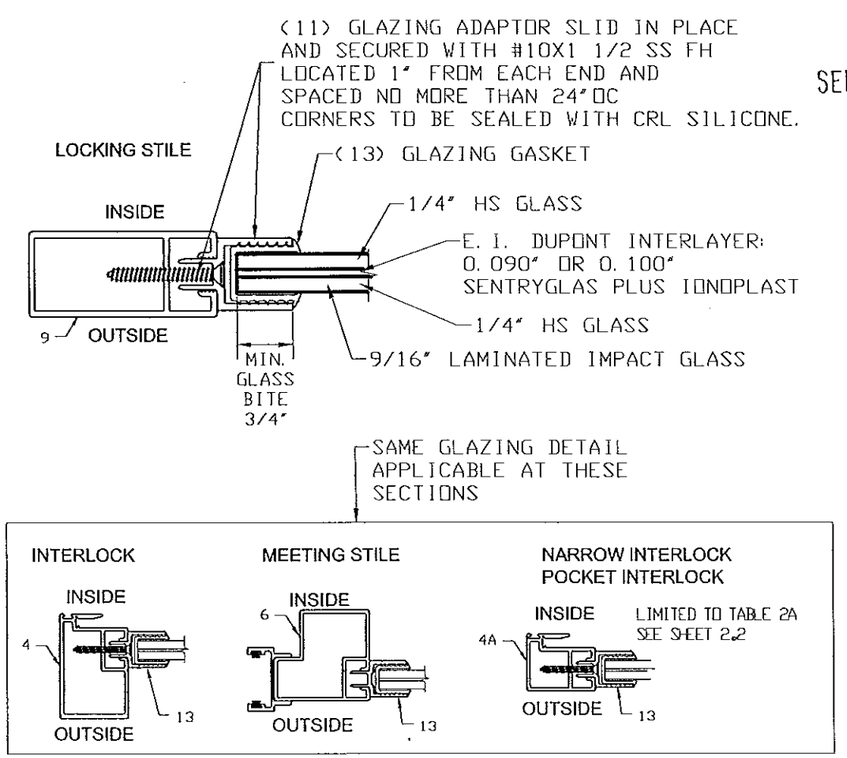

MANUFACTURER:

SOUTHEASTERN
Manufacturers of Impact Resistant Sliding Glass Doors

1505 COMMERCE LANE
JUPITER, FLORIDA 33458
PHONE: (561) 746-5493
FAX: (561) 575-1826

PRODUCT:
ATLAS PLUS
SERIES 5000 ALUMINUM
SLIDING GLASS DOOR
LARGE MISSILE IMPACT

Engineering:
EngCo Inc.
CA 8116
5595 Orange Dr. 201
Davie, FL 33314
Tel: (954) 585-0304
Fax: (954) 585-5106
ENGCO@AOL.COM

PEDRO M. DE FIGUEIREDO
No. 52609
STATE OF FLORIDA
PROFESSIONAL ENGINEER

SEP 23 2014

Engineer Seal
Pedro De Figueiredo
PE 52609

MIAMI-DADE BCCO:

PRODUCT REVISED
as complying with the Florida Building Code
Acceptance No. 13-1105.12
Expiration Date 6/26/18
By [signature]
Miami Dade Product Control

Date: 12/28/12
Scale: NA
Design by: PPMF

Drawing Number
13-186

SHEET
4 of 13

SIDE JAMB FRAMING ANCHORAGE DETAILS

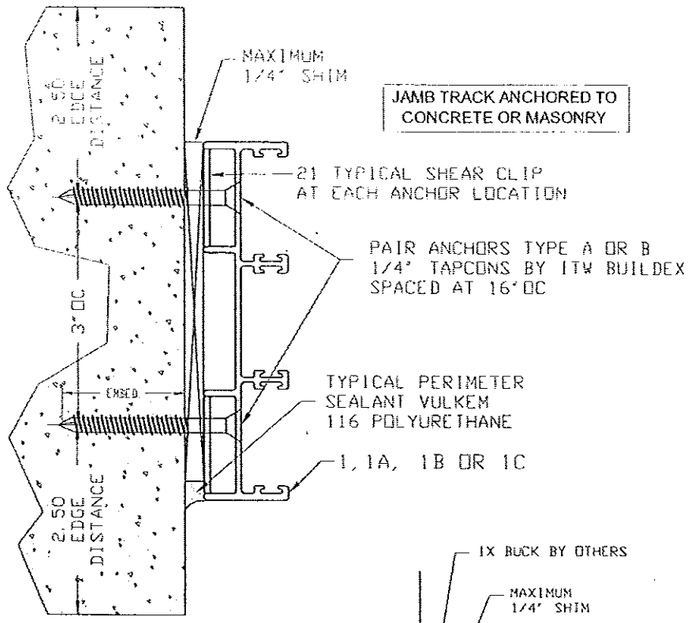

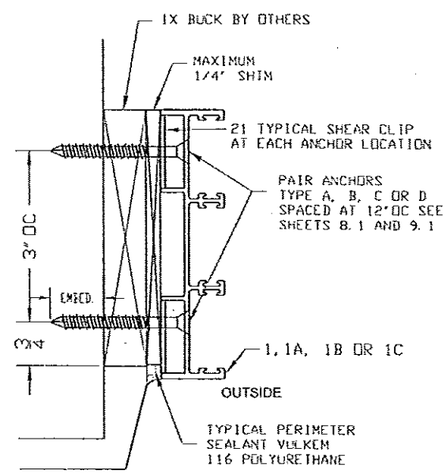

JAMB TRACK ANCHORED TO WOOD

OPTIONAL 2X WOOD BUCK TO BE PROPERLY ENGINEERED AND SECURED BY OTHERS

JAMB TRACK WITH 1X NON STRUCTURAL BUCK

OPTIONAL 1X WOOD BUCK

1X BUCK TO BE PROVIDED BY OTHERS 1X TO BE PROPERLY ENGINEERED AND SECURED TO TRANSFER IMPOSED LOADS.

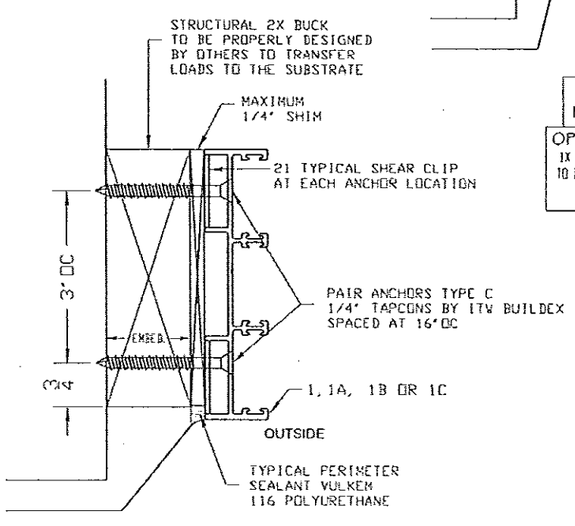

TRACK OPTIONS

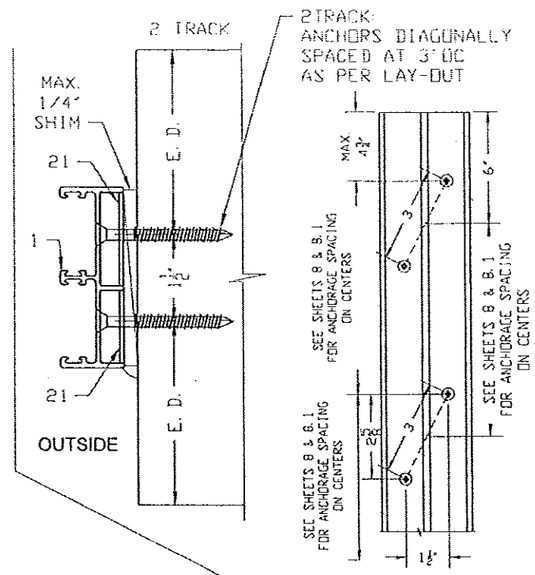

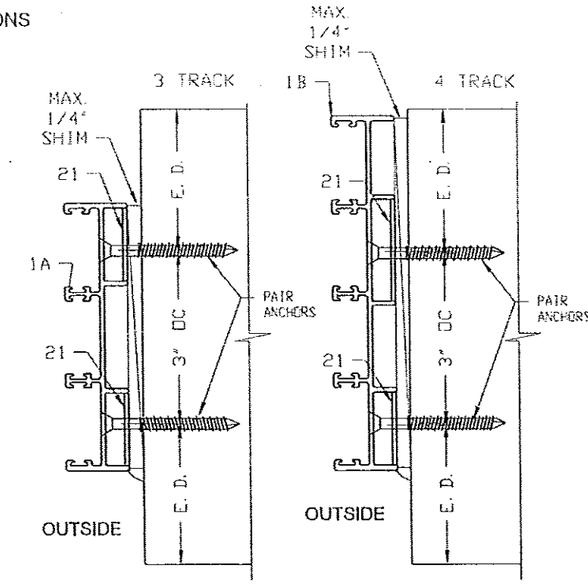

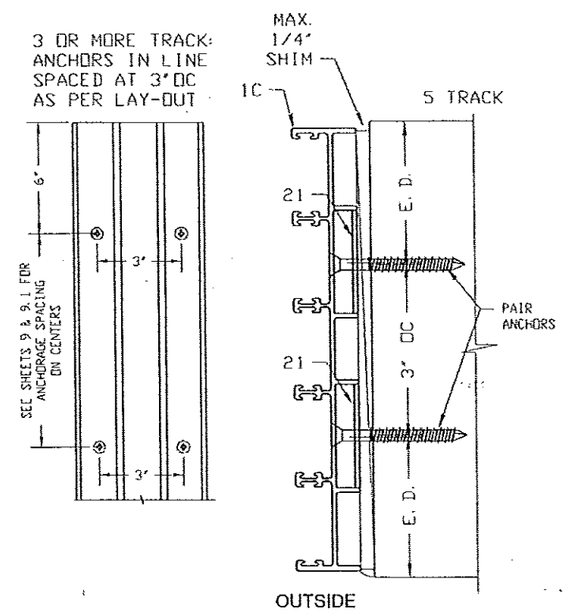

FOR JAMB INSTALLATION WITH 1X BUCK TO BE PROVIDED BY OTHERS. 1X TO BE PROPERLY ENGINEERED AND SECURED TO TRANSFER IMPOSED LOADS. SEE SHEET 8.1 AND 9.1.

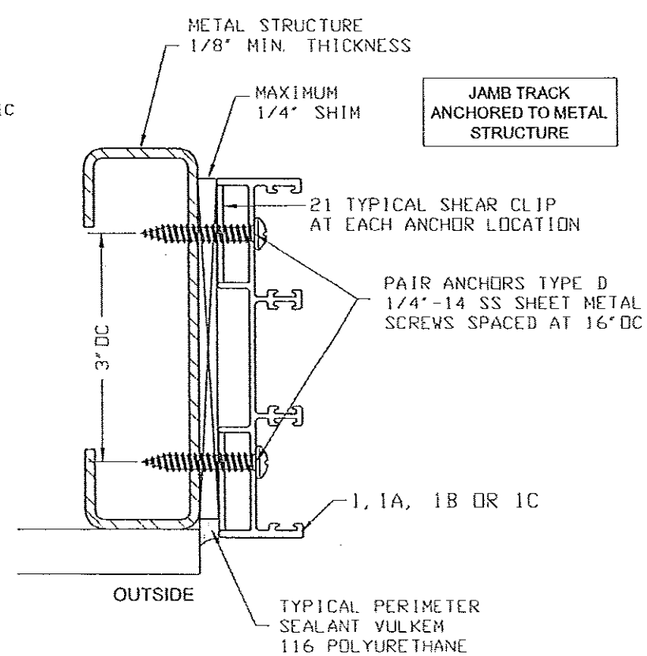

MANUFACTURER:

SOUTHEASTERN

Manufacturers of Impact Resistant Sliding Glass Doors

1505 COMMERCE LANE
JUPITER, FLORIDA 33458
PHONE: (561) 746-5493
FAX: (561) 575-1826

PRODUCT:

ATLAS PLUS

SERIES 5000 ALUMINUM SLIDING GLASS DOOR LARGE MISSILE IMPACT

Engineering:

EngCo Inc.

CA 8116
5595 Orange Dr. 201
Davie, FL 33314
Tel: (954) 585-0304
Fax: (954) 585-5305
ENGCO@AOL.COM

PEDRO DE FIGUEIREDO No. 52609 STATE OF FLORIDA PROFESSIONAL ENGINEER

SEP 23 2014

Engineer Seal
Pedro De Figueiredo
PE 52609

MIAMI-DADE BCCO:

PRODUCT REVISED
as complying with the Florida Building Code
Acceptance No. 13-1105.12
Expiration Date 6/26/18
By [signature]
Miami Dade Product Control

Date: 12/28/12
Scale: NA
Design by: PPMF

Drawing Number
13-186

SHEET
5 of 13

SILL FRAMING ANCHORAGE DETAILS

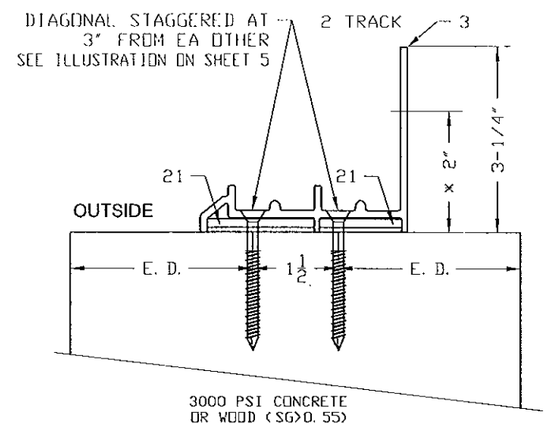

TRACK OPTIONS

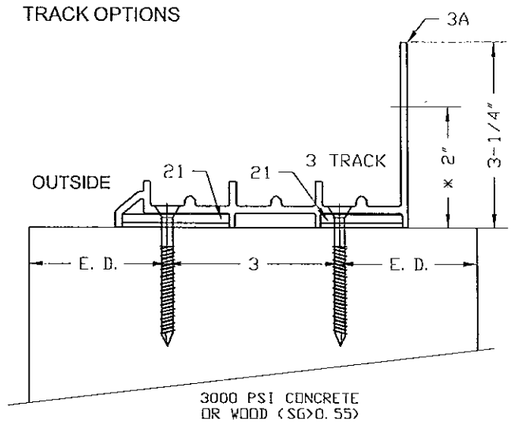

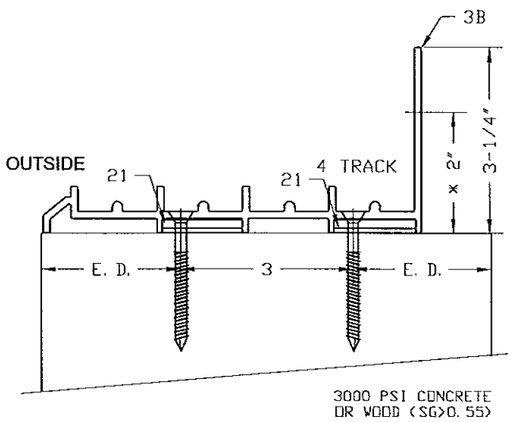

THRESHOLD LIMITATION:
(SEE ILLUSTRATION "Z"
& NOTES BELOW)

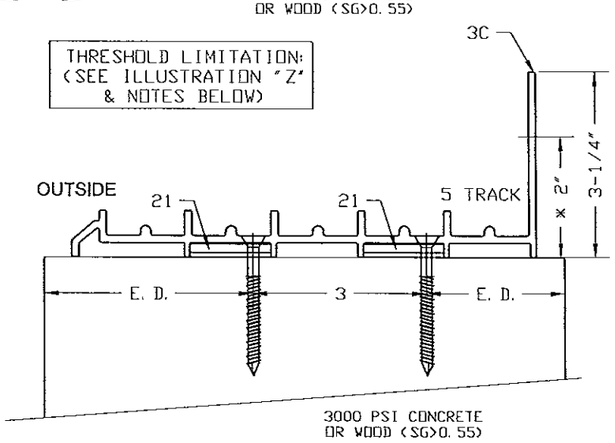

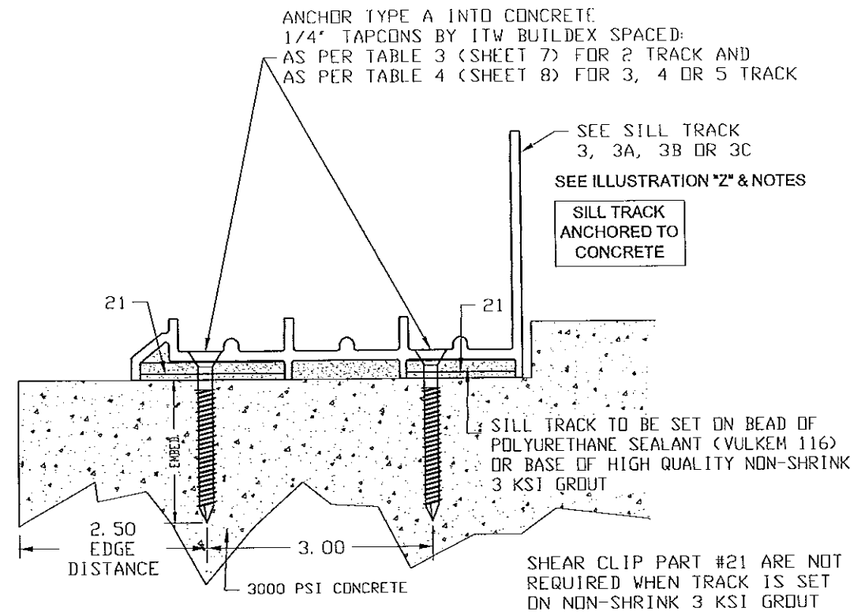

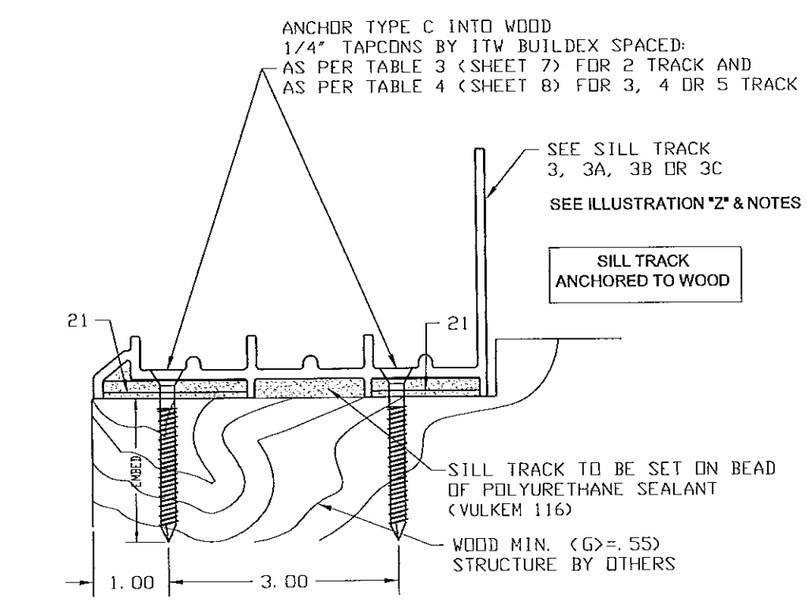

ILLUSTRATION "Z" & NOTES (APPLICABLE TO TABLE 1, 1A & 2)

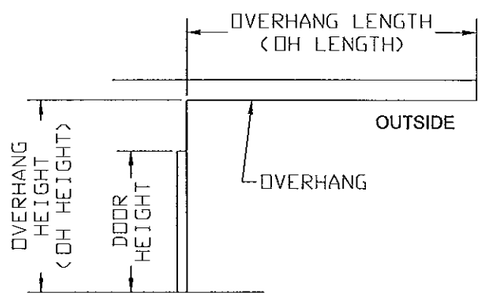

OVERHANG IN COMPLIANCE WITH THE FBC REQUIREMENTS
DOORS INSTALLED WHERE THE OVERHANG (OH) RATIO IS GREATER TO OR MORE THAN 1 NEED NOT TO BE TESTED FOR WATER INFILTRATION. THE OH RATIO SHALL BE CALCULATED BY THE FOLLOWING EQUATION
OH RATIO = OH LENGTH / OH HEIGHT >= 1.0

POSITIVE (EXTERIOR) DP SELECTION

THRESHOLD TYPE	MAXIMUM PRESSURES (PSF)	
	CASE 1	CASE 2
3-1/4"	+90	+90
2"	+90	+50

CASE 1- DOORS W/ OVERHANG AS PER ILLUSTRATION "Z"
CASE 2- DOORS WITHOUT OVERHANG

NOTES:
1- CASE 1 ABOVE ARE MAXIMUM POSITIVE PRESSURES FOR 3-1/4" OR 2" THRESHOLD WITH OVERHANG.
2- THE POSITIVE PRESSURE SHALL BE THE LESSER VALUE FROM THE ABOVE TABLE AND THE APPLICABLE TABLE 1, 1A OR 2.
3- SEE SHEET 1 NOTE 9 FOR SELECT PROCEDURE

MANUFACTURER:

SOUTHEASTERN
Manufacturers of Impact Resistant Sliding Glass Doors

1505 COMMERCE LANE
JUPITER, FLORIDA 33458
PHONE: (561) 746-5493
FAX: (561) 575-1826

PRODUCT:
ATLAS PLUS
SERIES 5000 ALUMINUM
SLIDING GLASS DOOR
LARGE MISSILE IMPACT

Engineering:
EngCo Inc.
CA 8116
5595 Orange Dr. 201
Davie, Fl. 33314
Tel. (954) 585-0304
Fax (954) 585-5305
ENGCO@AOL.COM

PEDRO M. DE FIGUEIREDO
No. 52609
STATE OF FLORIDA
PROFESSIONAL ENGINEER

SEP 23 2014

Engineer Seal
Pedro De Figueiredo
PE 52609

MIAMI-DADE BCCO:

PRODUCT REVISED
as complying with the Florida Buiding Code
Acceptance No. 13-1105.12
Expiration Date 6/26/18
By Ishmael Chavez
Miami Dade Product Control

Date: 12/28/12
Scale: NA
Design by: PPMF

Drawing Number
13-186

ALTERNATE SILL FRAMING ANCHORAGE DETAILS

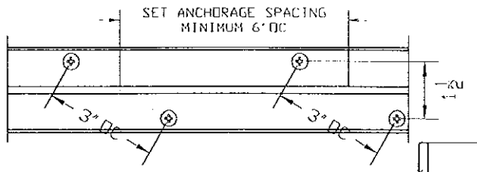

ANCHORAGE TOP VIEW
LAY-OUT APPLICABLE ONLY
FOR TWO TRACK SYSTEM
COORDINATE WITH SHEET 8

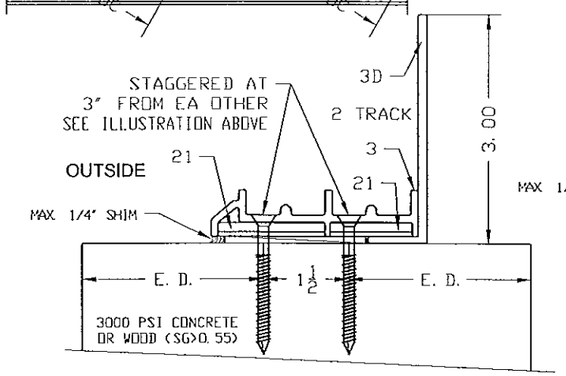

ALTERNATE SILL THRESHOLD
WITH 3" ADAPTOR

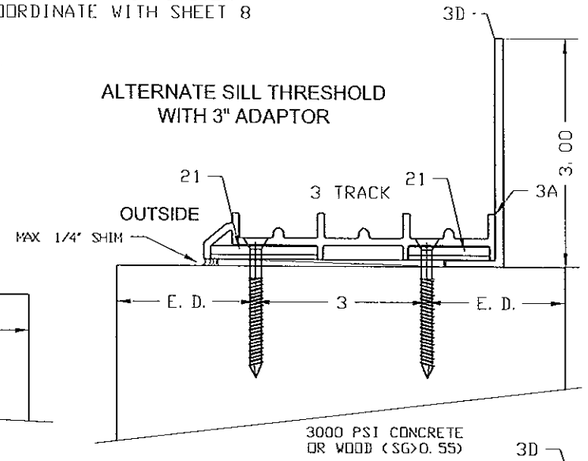

THRESHOLD LIMITATION:
(SEE ILLUSTRATION "Z"
& NOTES BELOW)

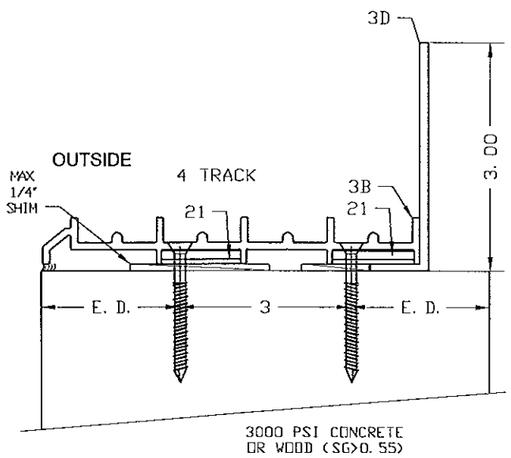

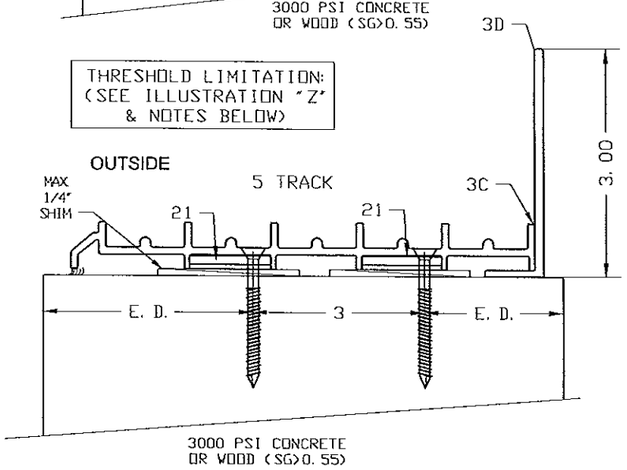

SILL TRACK
ANCHORED TO
CONCRETE

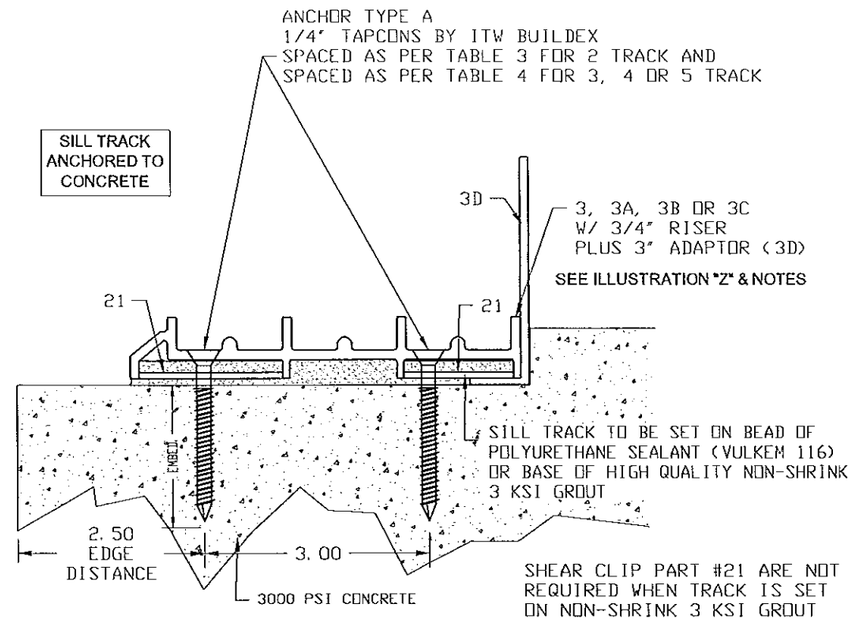

SILL TRACK
ANCHORED TO WOOD

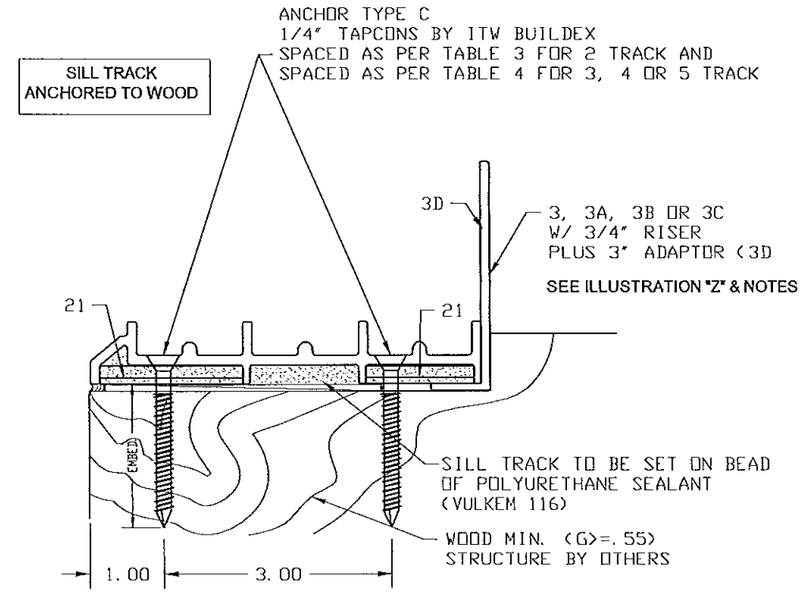

ILLUSTRATION "Z" & NOTES (APPLICABLE TO TABLE 1, 1A, 2 & 2A)

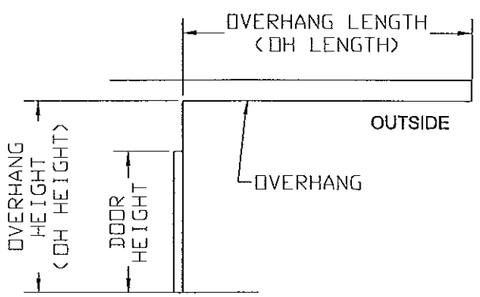

OVERHANG IN COMPLIANCE WITH THE FBC REQUIREMENTS
DOORS INSTALLED WHERE THE OVERHANG (OH) RATIO IS GREATER TO OR MORE THAN 1 NEED NOT TO BE TESTED FOR WATER INFILTRATION. THE OH RATIO SHALL BE CALCULATED BY THE FOLLOWING EQUATION
OH RATIO = OH LENGTH / OH HEIGHT >= 1.0

POSITIVE (EXTERIOR) DP SELECTION

THRESHOLD	MAXIMUM PRESSURES (PSF)	
2 PCS TYPE	CASE 1	CASE 2
3/4" SILL+3" ADAPTOR	+65	+50

CASE 1- DOORS W/ OVERHANG AS PER ILLUSTRATION "Z"
CASE 2- DOORS WITHOUT OVERHANG

NOTES:
1- THE ABOVE POSITIVE PRESSURES ARE THE MAXIMUM FOR 3/4" SILL + 3" ADAPTOR THRESHOLD.
2- USE THE LESSER OF THE ABOVE POSITIVE PRESSURE AND THE POSITIVE PRESSURES FROM TABLES 1, 1A, 2 or 2A
3- SEE SHEET 1 NOTE 9 FOR SELECT PROCEDURE

MANUFACTURER:
SOUTHEASTERN
Manufacturers of Impact Resistant Sliding Glass Doors
1505 COMMERCE LANE
JUPITER, FLORIDA 33458
PHONE: (561) 746-5493
FAX: (561) 575-1826

PRODUCT:
ATLAS PLUS
SERIES 5000 ALUMINUM
SLIDING GLASS DOOR
LARGE MISSILE IMPACT

Engineering:
EngCo Inc.
CA 8116
5595 Orange Dr. 201
Davie, FL 33314
Tel: (954) 585-0304
Fax: (954) 585-5306
ENGCO@AOL.COM

PEDRO M. DE FIGUEIREDO
No. 52609
STATE OF FLORIDA
PROFESSIONAL ENGINEER

SEP 23 2014

Engineer Seal
Pedro De Figueiredo
PE 52609

MIAMI-DADE BCCO:

PRODUCT REVISED
as complying with the Florida Building Code
Acceptance No. 13-1105.12
Expiration Date 6/26/18
By Ishaq I. Chaudhry
Miami Dade Product Control

Date: 12/28/12
Scale: NA
Design by: PPMF

Drawing Number
13-186

SHEET
6.1 of 13

HEADER FRAMING ANCHORAGE DETAILS

HEADER TRACK ANCHORED TO WOOD

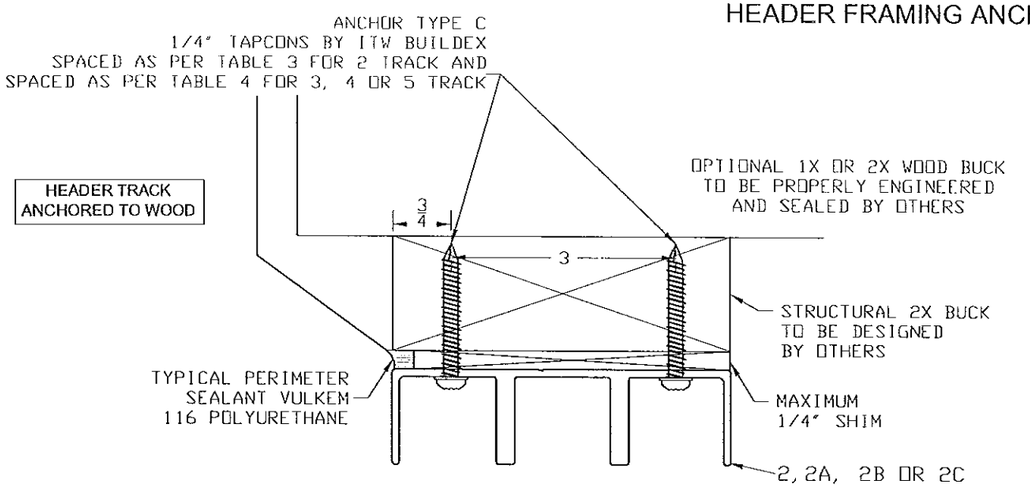

HEADER TRACK ANCHORED TO CONCRETE

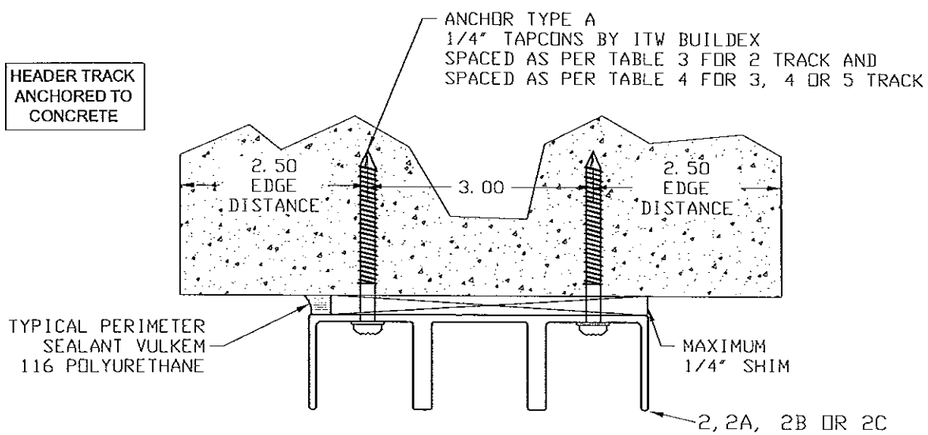

HEADER TRACK ANCHORED TO METAL STRUCTURE

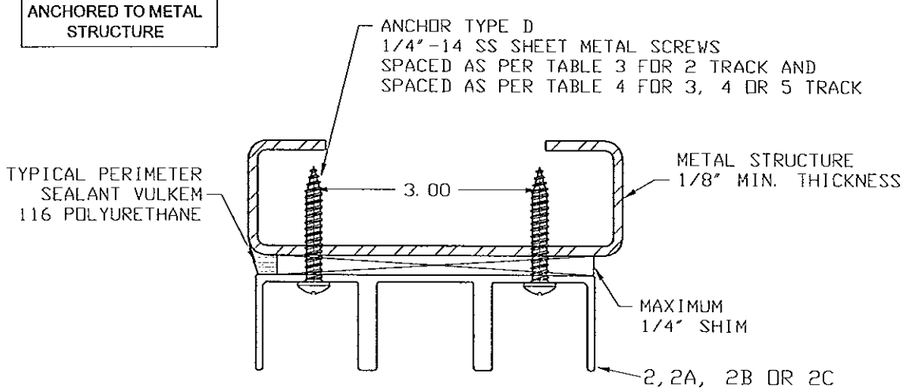

HEADER TRACK OPTIONS

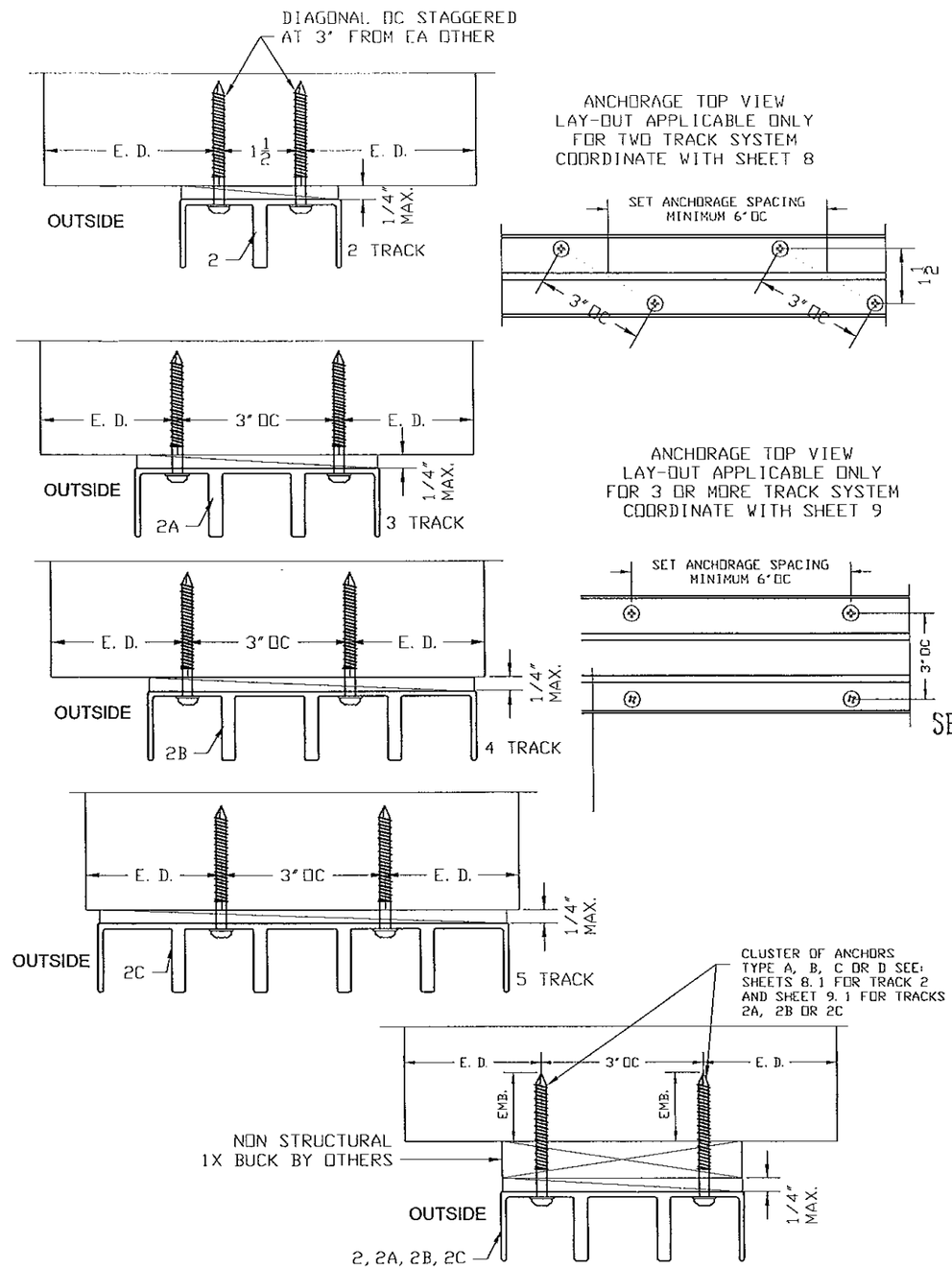

FOR HEADER INSTALLATION WITH 1X BUCK (NON STRUCTURAL) SEE SHEET 8.1 AND 9.1.
1X BUCK TO BE PROVIDED BY OTHERS.
1X TO BE PROPERLY ENGINEERED AND SECURED TO TRANSFER IMPOSED LOADS.

MANUFACTURER:

SOUTHEASTERN
Manufacturers of Impact Resistant Sliding Glass Doors

1505 COMMERCE LANE
JUPITER, FLORIDA 33458
PHONE: (561) 746-5493
FAX: (561) 575-1826

PRODUCT:
ATLAS PLUS
SERIES 5000 ALUMINUM
SLIDING GLASS DOOR
LARGE MISSILE IMPACT

Engineering:
EngCo Inc.
CA 8116
5595 Orange Dr. 201
Davie, FL 33314
Tel: (954) 585-0304
Fax: (954) 585-5106
ENGCO@AOL.COM

PEDRO M. DE FIGUEIREDO
No. 52609
STATE OF FLORIDA
PROFESSIONAL ENGINEER

SEP 23 2014

Engineer Seal
Pedro De Figueiredo
PE 52609

MIAMI-DADE BCCO:

PRODUCT REVISED
as complying with the Florida Building Code
Acceptance No. 13-1105.12
Expiration Date 6/26/18
By
Miami Dade Product Control

Date: 12/28/12
Scale: NA
Design by: PPMF

Drawing Number
13-186

2 TRACK FRAMING CLUSTER ANCHORAGE RATING AND SCHEDULE

TABLE 3 - (2 TRACK FRAMING) HEADER & SILL ANCHORAGE CAPACITY IN PSF

FUNCTION OF ANCHOR TYPE AND NUMBER OF CLUSTERS AT MEETING STILE/INTERLOCK (HEAD/SILL)

ANCHOR TYPE		A			C			D	
PANEL WIDTH	FRAME HEIGHT	1	2	3	2	3	4	1	2
30	80	78.5	100.0	100.0	100.0	100.0	100.0	93.6	100.0
	84	74.7	100.0	100.0	100.0	100.0	100.0	89.1	100.0
	96	65.4	100.0	100.0	94.8	100.0	100.0	78.0	100.0
	100	62.8	100.0	100.0	91.0	100.0	100.0	74.9	100.0
	104	60.4	100.0	100.0	87.5	100.0	100.0	72.0	100.0
	108	58.1	100.0	100.0	84.3	100.0	100.0	69.3	100.0
36	80	65.4	100.0	100.0	94.8	100.0	100.0	78.0	100.0
	84	62.3	100.0	100.0	90.3	100.0	100.0	74.3	100.0
	96	54.5	100.0	100.0	79.0	100.0	100.0	65.0	100.0
	100	52.3	100.0	100.0	75.8	100.0	100.0	62.4	100.0
	104	50.3	98.4	98.4	72.9	98.4	98.4	60.0	98.4
	108	48.4	90.1	90.1	70.2	90.1	90.1	57.8	90.1
42	80	56.1	100.0	100.0	81.3	100.0	100.0	66.9	100.0
	84	53.4	100.0	100.0	77.4	100.0	100.0	63.7	100.0
	96	46.7	93.4	98.7	67.7	98.7	98.7	55.7	98.7
	100	44.8	89.7	92.8	65.0	92.8	92.8	53.5	92.8
	104	43.1	84.9	84.9	62.5	84.9	84.9	51.4	84.9
	108	41.5	78.5	78.5	60.2	78.5	78.5	49.5	78.5
48	80	49.1	98.1	100.0	71.1	100.0	100.0	58.5	100.0
	84	46.7	93.4	100.0	67.7	100.0	100.0	55.7	100.0
	88	44.6	89.2	98.2	64.6	97.0	98.2	53.2	98.2
	92	42.7	85.3	93.9	61.8	92.7	93.9	50.9	93.9
	96	40.9	81.8	90.0	59.3	88.9	90.0	48.8	90.0
	100	39.2	78.5	83.1	56.9	83.1	83.1	46.8	83.1
	104	37.7	75.5	75.9	54.7	75.9	75.9	45.0	75.9
	108	36.3	70.0	70.0	52.7	70.0	70.0	43.3	70.0
54	80	43.6	87.2	92.0	63.2	92.0	92.0	52.0	92.0
	84	41.5	83.0	91.4	60.2	90.3	91.4	49.5	91.4
	88	39.6	79.3	87.3	57.5	86.2	87.3	47.3	87.3
	96	36.3	70.0	70.0	52.7	70.0	70.0	43.3	70.0
60	80	39.2	78.5	84.4	56.9	84.4	84.4	46.8	84.4
	84	37.4	74.7	77.5	54.2	77.5	77.5	44.6	77.5
	86	36.3	70.0	70.0	52.7	70.0	70.0	43.3	70.0

NUMBER OF CLUSTERS (n)

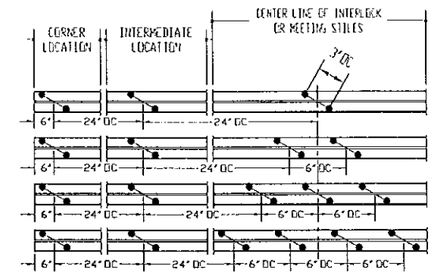

CENTER LINE OF INTERLOCK OR MEETING STILES

1 CLUSTER = 2 ANCHORS

2 CLUSTERS= 4 ANCHORS

3 CLUSTERS= 6 ANCHORS

4 CLUSTERS= 8 ANCHORS

PANEL WIDTH>48" REQUIRE MIN 2 CLUSTERS AT INTERMEDIATE LOCATION

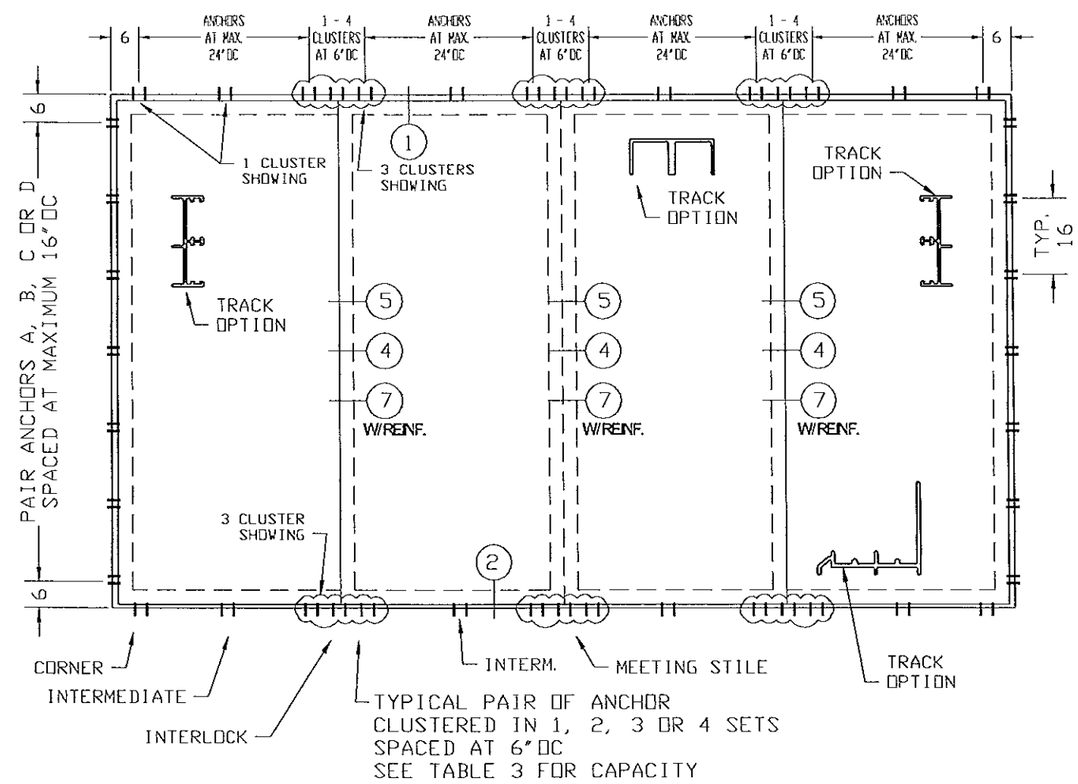

TABLE 3 EXAMPLE: (2 TRACK)

DOOR PANEL= 48" -- FRAME HEIGHT= 96"
HEADER & SILL ANCHOR TYPE A:
WITH 1 CLUSTER - MAXIMUM PRESSURE PD= ±40.9 PSF
WITH 2 CLUSTER - MAXIMUM PRESSURE PD= ±81.8 PSF
WITH 3 CLUSTER - MAXIMUM PRESSURE PD= ±90.0 PSF

REFER TO SHEET 1, NOTE 9 FOR SELECTION PROCEDURE

ANCHOR TYPES:	MINIMUM EDGE DISTANCE (E.D.)
A- 1/4" TAPCON BY ITW WITH 1 3/4" MIN. EMBEDMENT INTO 3000 psi CONCRETE	2 1/2"
B- 1/4" TAPCON BY ITW WITH 1 1/4" MIN. EMBEDMENT INTO HOLLOW BLOCK	2 1/2"
C- 1/4" TAPCON BY ITW WITH 1 1/2" MIN. EMBEDMENT INTO PT WOOD (SG=.55)	3/4"
D- 1/4-14 GR 5 SHEET METAL SCREWS INTO 1/8" METAL STRUCTURES	1/2"

NOTES:
1- MINIMUM EMBEDMENT ARE BEYOND WALL DRESSING.
2- METAL STRUCTURES ARE ASTM A36 STEEL OR 6063-T6 ALUMINUM
3- ANCHOR TYPE D MUST HAVE A MINIMUM 3 THREADS EMBEDMENT PASS SUBSTRATE
4- CONCRETE MASONRY UNITS SHALL CONFORM TO ASTM C-90 WITH MININUM 2000 PSI
5- ANCHORS A, B AND C: YIELD STRENGTH Fy=100 KSI, ULTIMATE STRENGTH Fu=125 KSI
6- ANCHORS D: YIELD STRENGTH Fy=92 KSI, ULTIMATE STRENGTH Fu=120 KSI

MANUFACTURER:
SOUTHEASTERN
Manufacturers of Impact Resistant Sliding Glass Doors
1505 COMMERCE LANE
JUPITER, FLORIDA 33458
PHONE: (561) 746-5493
FAX: (561) 575-1826

PRODUCT:
ATLAS PLUS
SERIES 5000 ALUMINUM SLIDING GLASS DOOR
LARGE MISSILE IMPACT

Engineering:
EngCo Inc.
CA 8116
5595 Orange Dr. 201
Davie, FL 33314
Tel: (954) 585-0304
Fax: (954) 585-5106
ENGCO@AOL.COM

PEDRO M. DE FIGUEIREDO
No. 52609
STATE OF FLORIDA
PROFESSIONAL ENGINEER

SEP 23 2014

Engineer Seal
Pedro De Figueiredo
PE 52609

MIAMI-DADE BCCO:

PRODUCT REVISED
as complying with the Florida Building Code
Acceptance No. 13-1105.12
Expiration Date 6/26/18
By Ishwar Chauhan
Miami Dade Product Control

Date: 12/28/12
Scale: NA
Design by: PPMF

Drawing Number
13-186

FRAMING CLUSTER ANCHORAGE SCHEDULE FOR INSTALLATION OVER 1X BUCK AT HEADER OR JAMB

MAXIMUM 80 PSF - 6 CLUSTERS (APPLICABLE TO ALL SIZES IN TABLES 1, 1A, 2 & 2A)

MAXIMUM 50PSF - 4 CLUSTERS (APPLICABLE TO ALL SIZES IN TABLES 1, 1A, 2 & 2A)

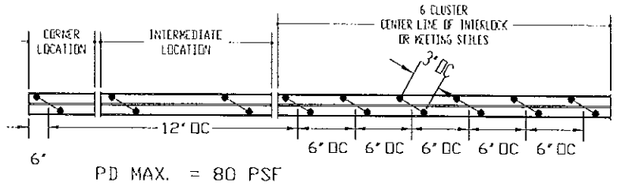

PD MAX. = 80 PSF
6 CLUSTER= 12 ANCHORS

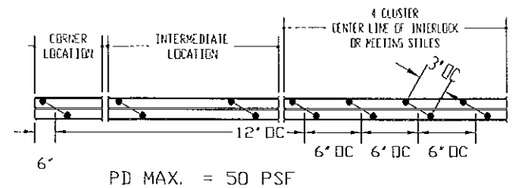

PD MAX. = 50 PSF
4 CLUSTER= 8 ANCHORS

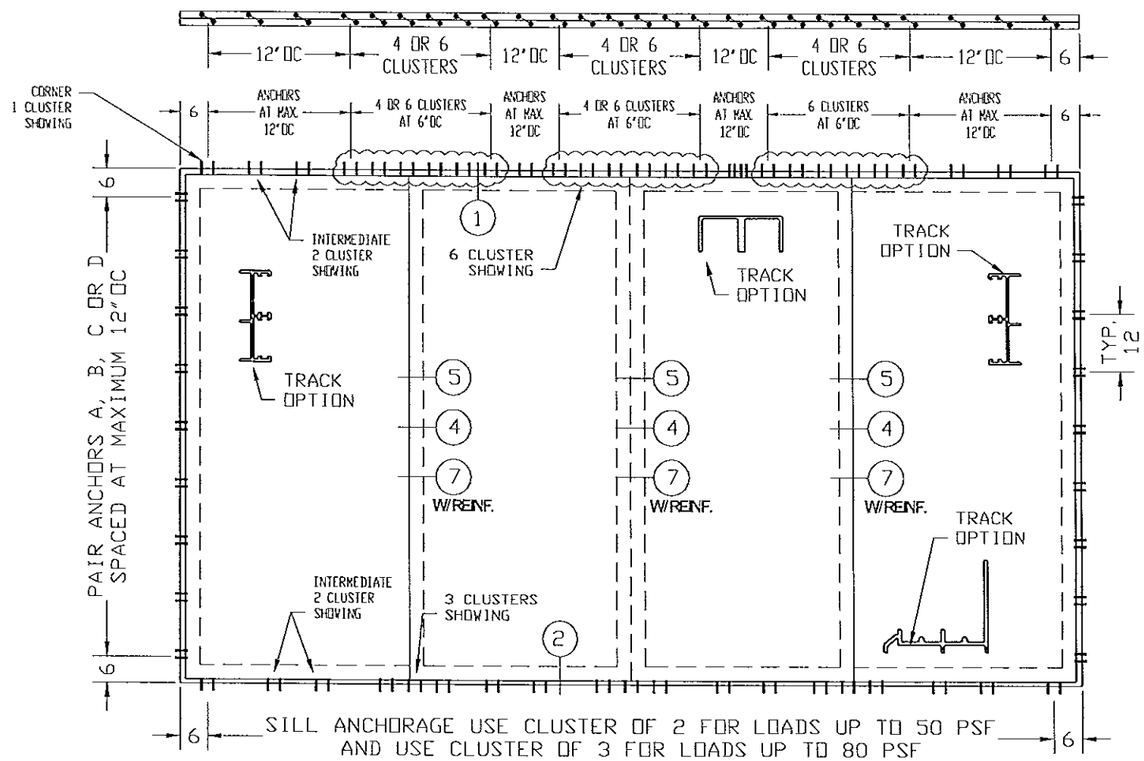

ANCHOR TYPES:	MINIMUM EDGE DISTANCE (E. D.)
A- 1/4" TAPCON BY ITW WITH 1 3/4" MIN. EMBEDMENT INTO 3000 psi CONCRETE	2 1/2"
B- 1/4" TAPCON BY ITW WITH 1 1/4" MIN. EMBEDMENT INTO HOLLOW BLOCK	2 1/2"
C- 1/4" TAPCON BY ITW WITH 1 1/2" MIN. EMBEDMENT INTO PT WOOD (SG=.55)	3/4"
D- 1/4-14 GR 5 SHEET METAL SCREWS INTO 1/8" METAL STRUCTURES	1/2"

NOTES:
1- MINIMUM EMBEDMENT ARE BEYOND WALL DRESSING.
2- METAL STRUCTURES ARE ASTM A36 STEEL OR 6063-T6 ALUMINUM
3- ANCHOR TYPE D MUST HAVE A MINIMUM 3 THREADS EMBEDMENT PASS SUBSTRATE
4- CONCRETE MASONRY UNITS SHALL CONFORM TO ASTM C-90 WITH MININUM 2000 PSI
5- ANCHORS A, B AND C: YIELD STRENGTH Fy=100 KSI, ULTIMATE STRENGTH Fu=125 KSI
6- ANCHORS D: YIELD STRENGTH Fy=92 KSI, ULTIMATE STRENGTH Fu=120 KSI

MANUFACTURER:

SOUTHEASTERN
Manufacturers of Impact Resistant Sliding Glass Doors

1505 COMMERCE LANE
JUPITER, FLORIDA 33458
PHONE: (561) 746-5493
FAX: (561) 575-1826

PRODUCT:
ATLAS PLUS
SERIES 5000 ALUMINUM
SLIDING GLASS DOOR
LARGE MISSILE IMPACT

Engineering:
EngCo Inc.
CA 8116
5595 Orange Dr. 201
Davie, FL 33314
Tel: (954) 585-0304
Fax: (954) 586-5306
ENGCO@AOL.COM

PEDRO DE FIGUEIREDO
No. 52609
STATE OF FLORIDA
PROFESSIONAL ENGINEER

SEP 23 2014

Engineer Seal
Pedro De Figueiredo
PE 52609

MIAMI-DADE BCCO:

PRODUCT REVISED
as complying with the Florida Building Code
Acceptance No. 13-1105.12
Expiration Date 6/26/18
By Ishang L. Chang
Miami Dade/Product Control

Date: 12/28/12
Scale: NA
Design by: PPMF

Drawing Number
13-186

SHEET
8.1 of 13

3, 4 & 5 TRACK FRAMING PAIR CLUSTER ANCHORAGE SELECTION

TABLE 4 - (3, 4 OR 5 TRACK FRAMING) ANCHORAGE CAPACITY IN PSF
FUNCTION OF ANCHOR TYPE AND NUMBER OF CLUSTERS - HEADER & SILL

ANCHOR TYPE		A			C			D	
PANEL WIDTH	FRAME HEIGHT	1	2	3	2	3	4	1	2
30	80	78.5	100.0	100.0	100.0	100.0	100.0	93.6	100.0
	84	74.7	100.0	100.0	100.0	100.0	100.0	89.1	100.0
	96	65.4	100.0	100.0	94.8	100.0	100.0	78.0	100.0
	100	62.8	100.0	100.0	91.0	100.0	100.0	74.9	100.0
	104	60.4	100.0	100.0	87.5	100.0	100.0	72.0	100.0
	108	58.1	100.0	100.0	84.3	100.0	100.0	69.3	100.0
36	80	65.4	100.0	100.0	94.8	100.0	100.0	78.0	100.0
	84	62.3	100.0	100.0	90.3	100.0	100.0	74.3	100.0
	96	54.5	100.0	100.0	79.0	100.0	100.0	65.0	100.0
	100	52.3	100.0	100.0	75.8	100.0	100.0	62.4	100.0
	104	50.3	98.4	98.4	72.9	98.4	98.4	60.0	98.4
	108	48.4	90.1	90.1	70.2	90.1	90.1	57.8	90.1
42	80	56.1	100.0	100.0	81.3	100.0	100.0	66.9	100.0
	84	53.4	100.0	100.0	77.4	100.0	100.0	63.7	100.0
	96	46.7	93.4	98.7	67.7	98.7	98.7	55.7	98.7
	100	44.8	89.7	92.8	65.0	92.8	92.8	53.5	92.8
	104	43.1	84.9	84.9	62.5	84.9	84.9	51.4	84.9
	108	41.5	78.5	78.5	60.2	78.5	78.5	49.5	78.5
48	80	49.1	98.1	100.0	71.1	100.0	100.0	58.5	100.0
	84	46.7	93.4	100.0	67.7	100.0	100.0	55.7	100.0
	88	44.6	89.2	98.2	64.6	97.0	98.2	53.2	98.2
	92	42.7	85.3	93.9	61.8	92.7	93.9	50.9	93.9
	96	40.9	81.8	90.0	59.3	88.9	90.0	48.8	90.0
	100	39.2	78.5	83.1	56.9	83.1	83.1	46.8	83.1
	104	37.7	75.5	75.9	54.7	75.9	75.9	45.0	75.9
	108	36.3	70.0	70.0	52.7	70.0	70.0	43.3	70.0
54	80	43.6	87.2	92.0	63.2	92.0	92.0	52.0	92.0
	84	41.5	83.0	91.4	60.2	90.3	91.4	49.5	91.4
	88	39.6	79.3	87.3	57.5	86.2	87.3	47.3	87.3
	96	36.3	70.0	70.0	52.7	70.0	70.0	43.3	70.0
60	80	39.2	78.5	84.4	56.9	84.4	84.4	46.8	84.4
	84	37.4	74.7	77.5	54.2	77.5	77.5	44.6	77.5
	86	36.3	70.0	70.0	52.7	70.0	70.0	43.3	70.0

NUMBER OF CLUSTERS (n)

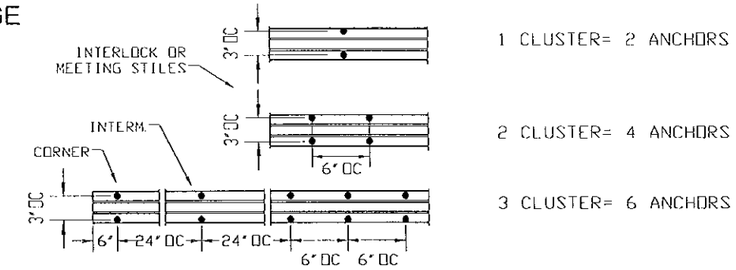

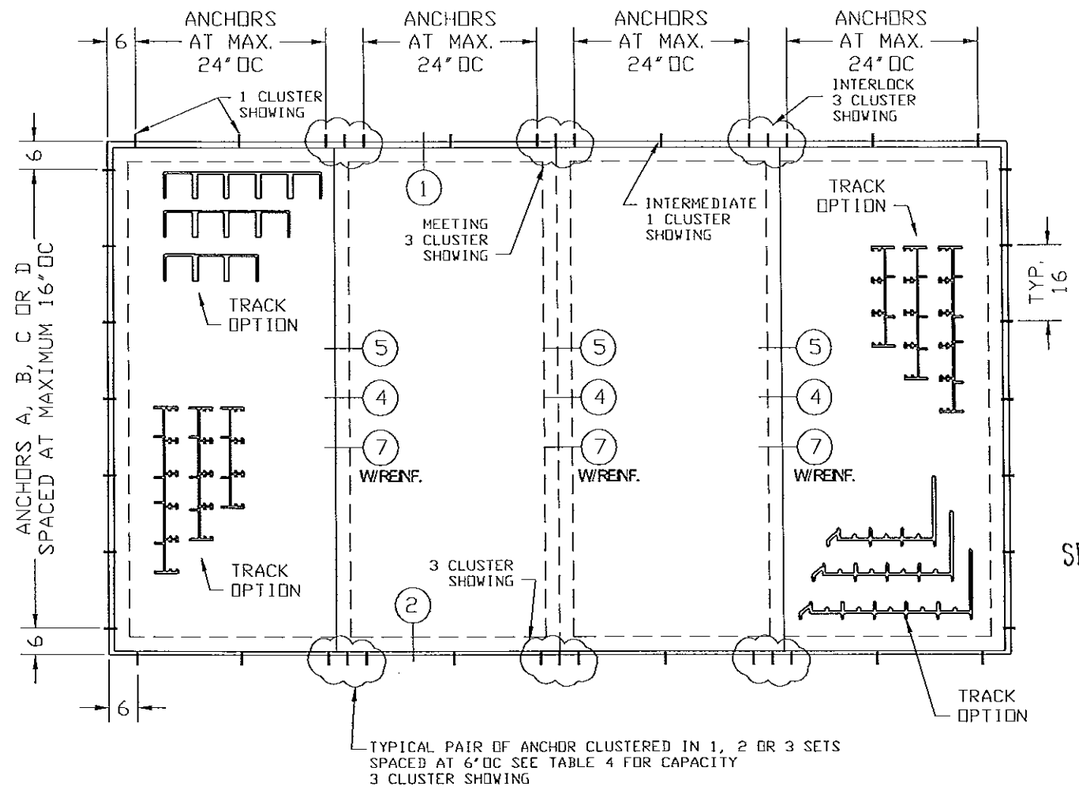

TABLE 4 EXAMPLE:

DOOR PANEL= 48" -- FRAME HEIGHT= 96"
HEADER & SILL ANCHOR TYPE A:
WITH 1 CLUSTER - MAXIMUM PRESSURE PD= ±40.9 PSF
WITH 2 CLUSTER - MAXIMUM PRESSURE PD= ±81.8 PSF
WITH 3 CLUSTER - MAXIMUM PRESSURE PD= ±90.0 PSF

REFER TO SHEET 1, NOTE 9 FOR SELECTION PROCEDURE

ANCHOR TYPES:	MINIMUM EDGE DISTANCE (E.D.)
A- 1/4" TAPCON BY ITW WITH 1 3/4" MIN. EMBEDMENT INTO 3000 psi CONCRETE	2 1/2"
B- 1/4" TAPCON BY ITW WITH 1 1/4" MIN. EMBEDMENT INTO HOLLOW BLOCK	2 1/2"
C- 1/4" TAPCON BY ITW WITH 1 1/2" MIN. EMBEDMENT INTO PT WOOD (SG=.55)	3/4"
D- 1/4-14 GR 5 SHEET METAL SCREWS INTO 1/8" METAL STRUCTURES	1/2"

NOTES:
1- MINIMUM EMBEDMENT ARE BEYOND WALL DRESSING.
2- METAL STRUCTURES ARE ASTM A36 STEEL OR 6063-T6 ALUMINUM
3- ANCHOR TYPE D MUST HAVE A MINIMUM 3 THREADS EMBEDMENT PASS SUBSTRATE
4- CONCRETE MASONRY UNITS SHALL CONFORM TO ASTM C-90 WITH MININUM 2000 PSI
5- ANCHORS A, B AND C: YIELD STRENGTH Fy=100 KSI, ULTIMATE STRENGTH Fu=125 KSI
6- ANCHORS D: YIELD STRENGTH Fy=92 KSI, ULTIMATE STRENGTH Fu=120 KSI

MANUFACTURER:
SOUTHEASTERN
Manufacturers of Impact Resistant Sliding Glass Doors
1505 COMMERCE LANE
JUPITER, FLORIDA 33458
PHONE: (561) 746-5493
FAX: (561) 575-1826

PRODUCT:
ATLAS PLUS
SERIES 5000 ALUMINUM SLIDING GLASS DOOR LARGE MISSILE IMPACT

Engineering:
EngCo Inc.
CA 8116
5595 Orange Dr. 201
Davie, Fl. 33314
Tel: (954) 583-0304
Fax: (954) 583-5306
ENGCO@AOL.COM

PEDRO M. DE FIGUEIREDO No. 52609 STATE OF FLORIDA PROFESSIONAL ENGINEER

SEP 23 2014

Engineer Seal
Pedro De Figueiredo
PE 52609

MIAMI-DADE BCCO:

PRODUCT REVISED
as complying with the Florida Building Code
Acceptance No. 13-1105.12
Expiration Date 6/26/15
By [signature]
Miami Dade Product Control

Date: 12/28/12
Scale: NA
Design by: PPMF

Drawing Number
13-186

FRAMING PAIR CLUSTER ANCHORAGE SCHEDULE FOR INSTALLATION OVER 1X BUCK AT HEADER OR JAMB

MAXIMUM 80 PSF - 6 CLUSTERS (APPLICABLE TO ALL SIZES IN TABLES 1, 1A, 2 & 2A)

MAXIMUM 50PSF - 4 CLUSTERS (APPLICABLE TO ALL SIZES IN TABLES 1, 1A, 2 & 2A)

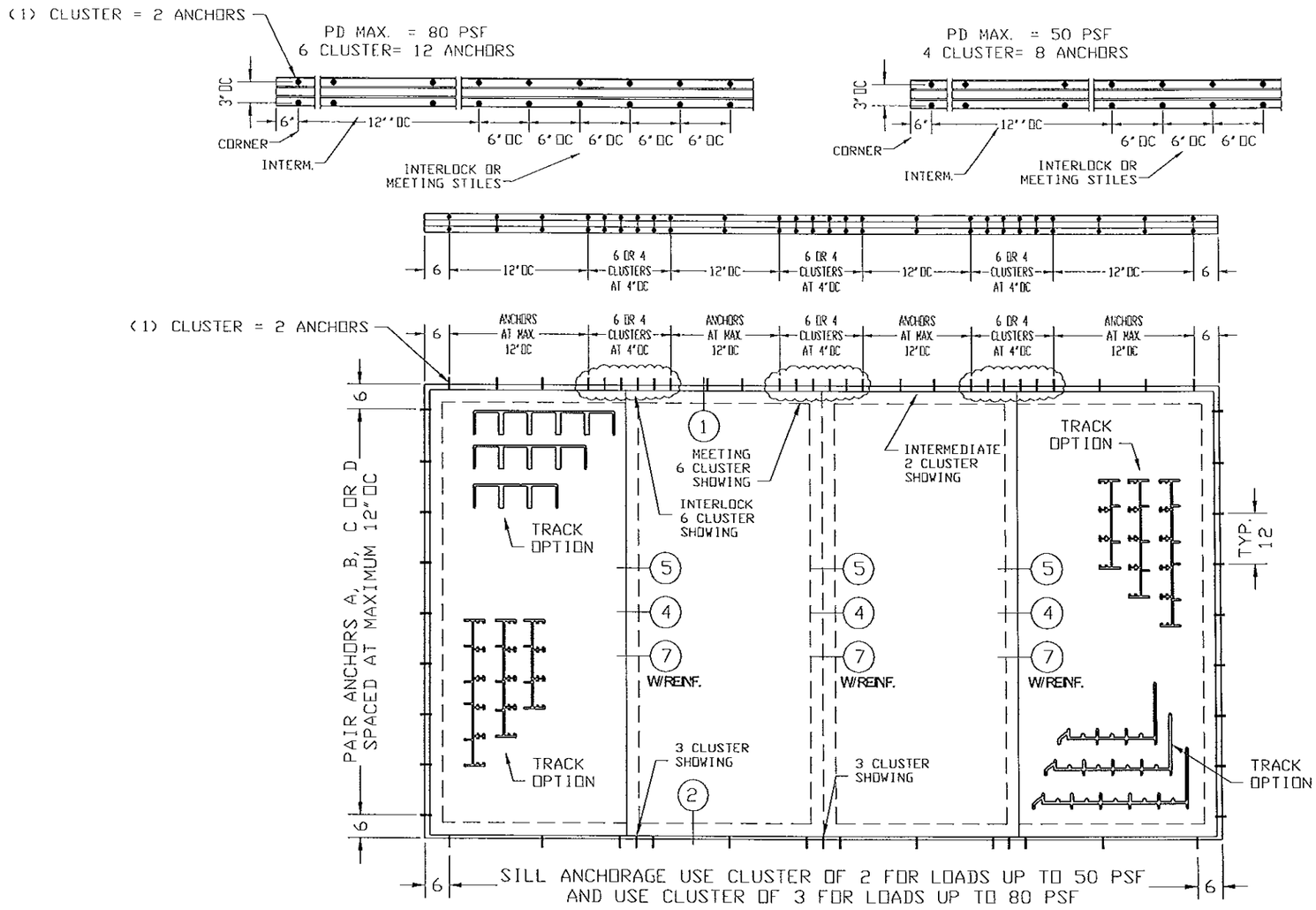

ANCHOR TYPES:	MINIMUM EDGE DISTANCE (E. D.)
A- 1/4" TAPCON BY ITW WITH 1 3/4" MIN. EMBEDMENT INTO 3000 psi CONCRETE	2 1/2"
B- 1/4" TAPCON BY ITW WITH 1 1/4" MIN. EMBEDMENT INTO HOLLOW BLOCK	2 1/2"
C- 1/4" TAPCON BY ITW WITH 1 1/2" MIN. EMBEDMENT INTO PT WOOD (SG=.55)	3/4"
D- 1/4-14 GR 5 SHEET METAL SCREWS INTO 1/8" METAL STRUCTURES	1/2"

NOTES:

1- MINIMUM EMBEDMENT ARE BEYOND WALL DRESSING.
2- METAL STRUCTURES ARE ASTM A36 STEEL OR 6063-T6 ALUMINUM
3- ANCHOR TYPE D MUST HAVE A MINIMUM 3 THREADS EMBEDMENT PASS SUBSTRATE
4- CONCRETE MASONRY UNITS SHALL CONFORM TO ASTM C-90 WITH MININUM 2000 PSI
5- ANCHORS A, B AND C: YIELD STRENGTH Fy=100 KSI, ULTIMATE STRENGTH Fu=125 KSI
6- ANCHORS D: YIELD STRENGTH Fy=92 KSI, ULTIMATE STRENGTH Fu=120 KSI

MANUFACTURER:

SOUTHEASTERN

Manufacturers of Impact Resistant Sliding Glass Doors

1505 COMMERCE LANE
JUPITER, FLORIDA 33458
PHONE: (561) 746-5493
FAX: (561) 575-1826

PRODUCT:

ATLAS PLUS

SERIES 5000 ALUMINUM SLIDING GLASS DOOR LARGE MISSILE IMPACT

Engineering:

EngCo Inc.

CA 8116
5595 Orange Dr. 201
Davie, Fl. 33314
Tel. (954) 585-0304
Fax (954) 585-5105
ENGCO@AOL.COM

PEDRO M. DE FIGUEIREDO
No. 52609
STATE OF FLORIDA
PROFESSIONAL ENGINEER

SEP 23 2014

Engineer Seal
Pedro De Figueiredo
PE 52609

MIAMI-DADE BCCO:

PRODUCT REVIEWED
as complying with the Florida Building Code
Acceptance No. 13-1105.12
Expiration Date 6/26/18
By
Miami Dade/Product Control

Date: 12/28/12
Scale: NA
Design by: PPMF

Drawing Number
13-186

SHEET
9.1 of 13

DOOR FRAMING

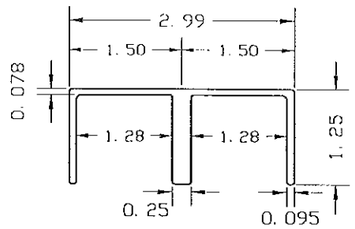

2- TWO TRACK HEADER
ALLOY: 6063-T6

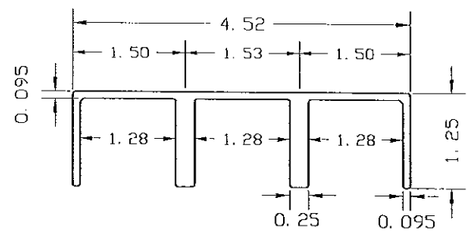

2A- THREE TRACK HEADER
ALLOY: 6063-T6

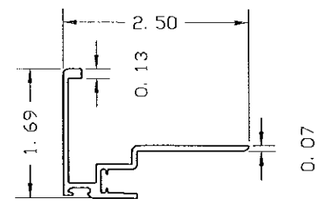

1P- POCKET JAMB
ALLOY: 6063-T6

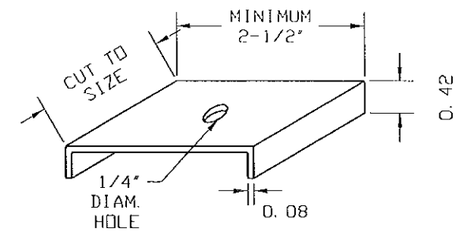

21- JAMB SHEAR CLIP
ALUMINUM 6063-T6

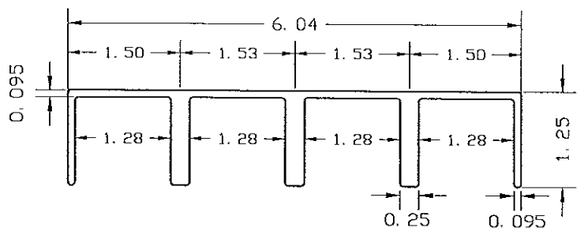

2B- FOUR TRACK HEADER
ALLOY: 6063-T6

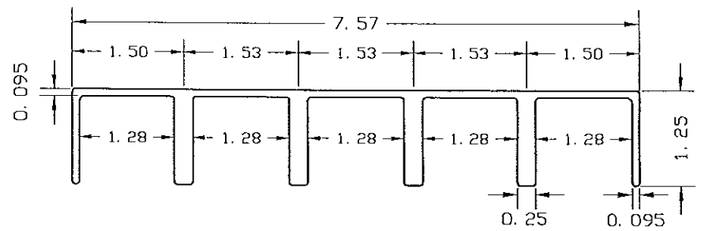

2C- FIVE TRACK HEADER
ALLOY: 6063-T6

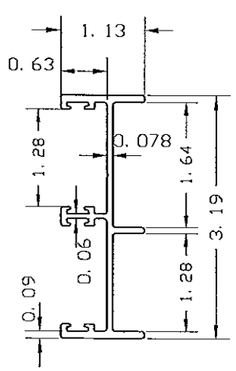

1- TWO TRACK JAMB
ALLOY: 6063-T6

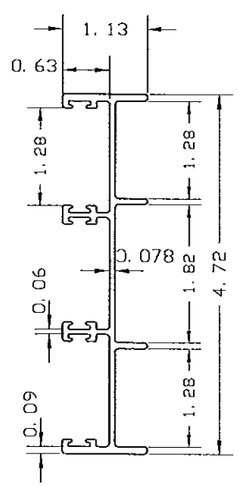

1A- THREE TRACK JAMB
ALLOY: 6063-T6

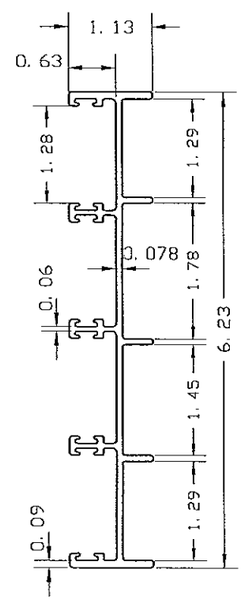

1B- FOUR TRACK JAMB
ALLOY: 6063-T6

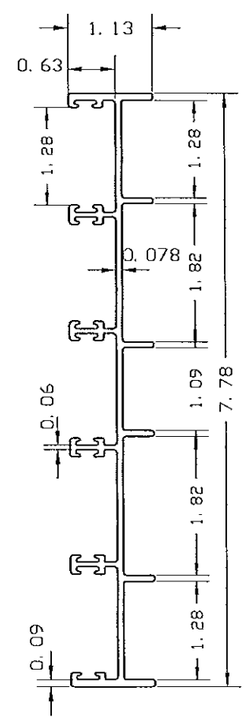

1C- FIVE TRACK JAMB
ALLOY: 6063-T6

MANUFACTURER:

SOUTHEASTERN
Manufacturers of Impact Resistant Sliding Glass Doors

1505 COMMERCE LANE
JUPITER, FLORIDA 33458
PHONE: (561) 746-5493
FAX: (561) 575-1826

PRODUCT:
ATLAS PLUS
SERIES 5000 ALUMINUM
SLIDING GLASS DOOR
LARGE MISSILE IMPACT

Engineering:
EngCo Inc.
CA 8116
5595 Orange Dr. 201
Davie, Fl. 33314
Tel.: (954) 585-0304
Fax: (954) 585-5106
ENGCO@AOL.COM

STATE OF FLORIDA
PEDRO A. DE FIGUEIREDO
No. 52609
PROFESSIONAL ENGINEER

SEP 23 2014

Engineer Seal
Pedro De Figueiredo
PE 52609

MIAMI-DADE BCCO:

PRODUCT REVISED
as complying with the Florida
Building Code
Acceptance No. 13-1105.12
Expiration Date 6/26/18
By
Miami Dade Product Control

Date: 12/28/12
Scale: NA
Design by: PPMF

Drawing Number
13-186

SHEET
10 of 13

DOOR FRAMING

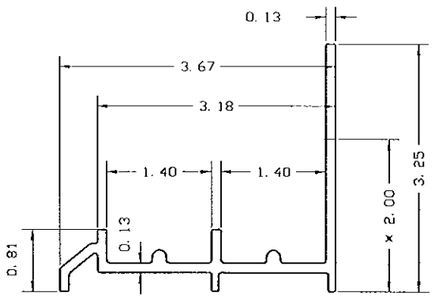

3- TWO TRACK SILL
ALLOY: 6063-T6
3 1/4" RISER CAN BE REDUCED TO 2"
* SEE SHEET 6 FOR LIMITATIONS

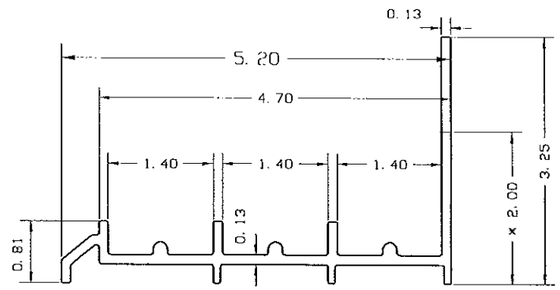

3A- THREE TRACK SILL
ALLOY: 6063-T6
3 1/4" RISER CAN BE REDUCED TO 2"
* SEE SHEET 6 FOR LIMITATIONS

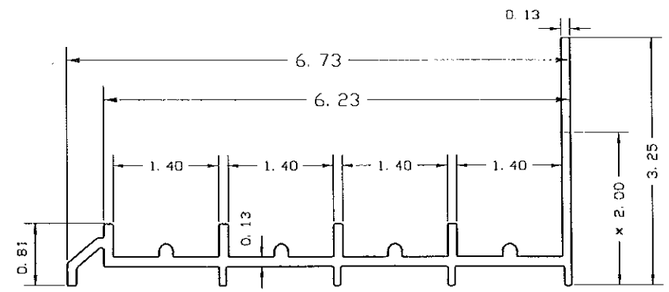

3B- FOUR TRACK SILL
ALLOY: 6063-T6
3 1/4" RISER CAN BE REDUCED TO 2"
* SEE SHEET 6 FOR LIMITATIONS

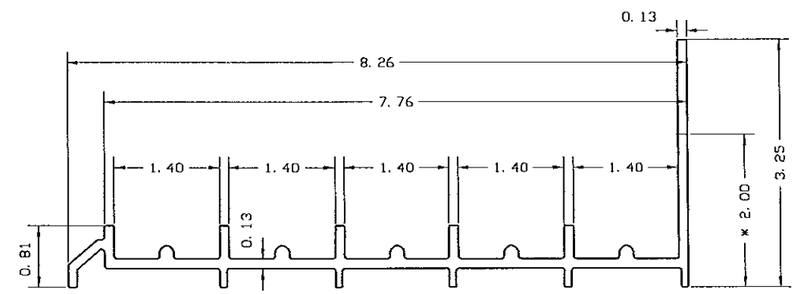

3C- FIVE TRACK SILL
ALLOY: 6063-T6
3 1/4" RISER CAN BE REDUCED TO 2" OR 3/4"
* SEE SHEET 6 FOR LIMITATIONS

SILL TRACK WITH 3/4" RISER

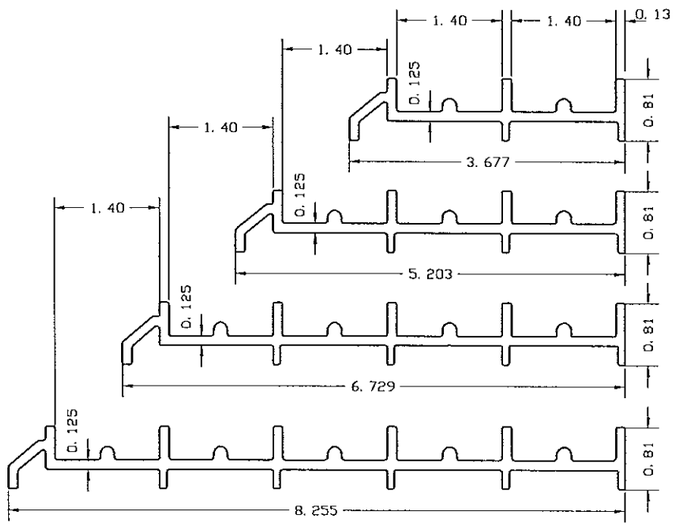

3- TWO TRACK SILL
ALLOY: 6063-T6
3/4" RISER (0.81")

3A- THREE TRACK SILL
ALLOY: 6063-T6
3/4" RISER (0.81")

3B- FOUR TRACK SILL
ALLOY: 6063-T6
3/4" RISER (0.81")

3C- FIVE TRACK SILL
ALLOY: 6063-T6
3/4" RISER (0.81")

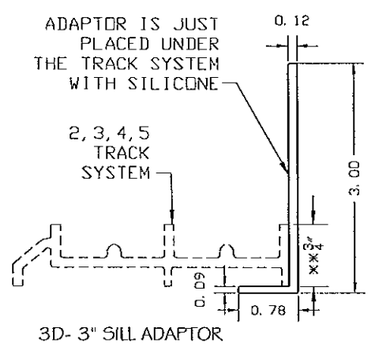

3D- 3" SILL ADAPTOR
ALLOY: 6063-T6
TO BE USED WITH 3/4" RISER THRESHOLD
** SEE SHEET 6.1 FOR LIMITATIONS

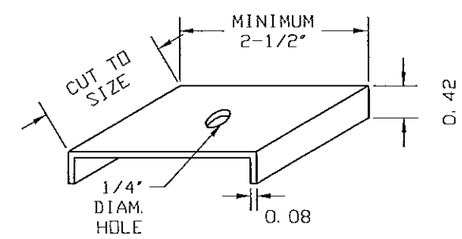

21- JAMB SHEAR CLIP
ALUMINUM 6063-T6

MANUFACTURER:

SOUTHEASTERN
Manufacturers of Impact Resistant Sliding Glass Doors

1505 COMMERCE LANE
JUPITER, FLORIDA 33458
PHONE: (561) 746-5493
FAX: (561) 575-1826

PRODUCT:
ATLAS PLUS
SERIES 5000 ALUMINUM
SLIDING GLASS DOOR
LARGE MISSILE IMPACT

Engineering:
EngCo Inc.
CA 8116
5595 Orange Dr. 201
Davie, Fl. 33314
Tel. (954) 585-0304
Fax. (954) 585-5106
ENGCO@AOL.COM

PEDRO M. DE FIGUEIREDO
No. 52609
STATE OF FLORIDA
PROFESSIONAL ENGINEER

SEP 23 2014

Engineer Seal
Pedro De Figueiredo
PE 52609

MIAMI-DADE BCCO:

PRODUCT REVISED
as complying with the Florida Building Code
Acceptance No 13-1105.12
Expiration Date 6/26/18
By
Miami Dade Product Control

Date: 12/28/12
Scale: NA
Design by: PPMF

Drawing Number
13-186

SHEET
10.1 of 13

DOOR PANEL COMPONENTS & BILLOF MATERIALS

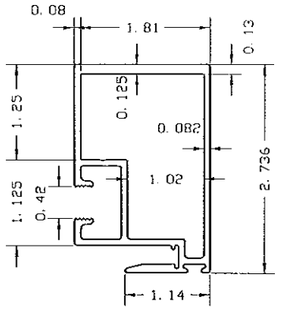

4- ATLAS INTERLOCK
ALLOY: 6063-T6

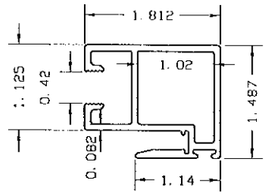

4A- ATLAS NARROW INTERLOCK
ALLOY: 6063-T6
(APPLICABLE TO TABLE 2A)

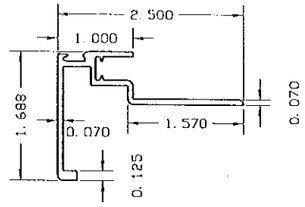

23- POCKET INTERLOCK
6063-T6

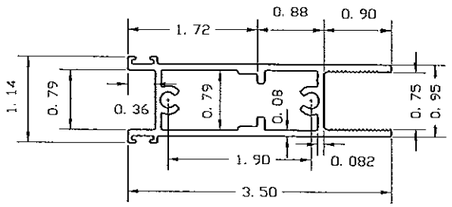

5- DOOR TOP RAIL
ALLOY: 6063-T6
ONLY ON OPERABLE PANELS

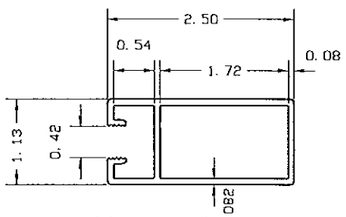

9- DOOR END RAIL
ALLOY: 6063-T6

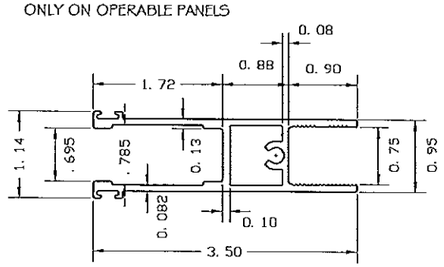

8- DOOR BOTTOM RAIL
ALLOY: 6063-T6

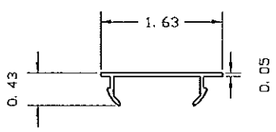

12- OPTIONAL FRAME
SNAP COVER
ALLOY: 6063-T6

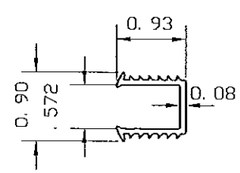

13- GLAZING GASKET
EXTRUDED PVC 80 DUROMETER
MARINE GASKET PART# 992
MADE BY TEAM PLASTICS, INC.

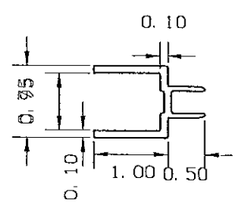

11- GLAZING ADAPTER
ALLOY: 6063-T5

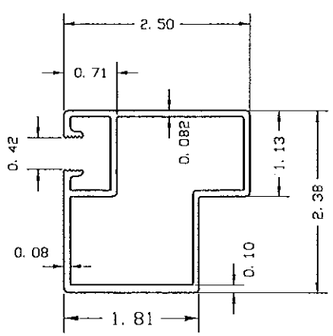

6- ATLAS END RAIL
ALLOY: 6063-T6

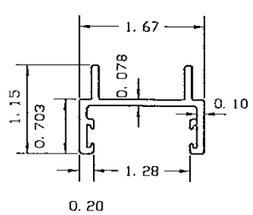

7- ATLAS DOOR ASTRAGAL
ALLOY: 6063-T6

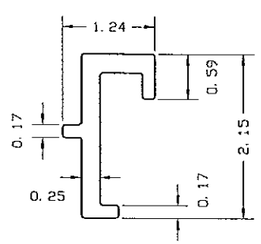

20- ATLAS INTERLOCK
REINFORCEMENT
6063-T6

BILL OF MATERIALS

#	DESCRIPTION	MATERIAL	SUPPLIER
1	TWO TRACK JAMB	ALUMINUM 6063-T6	SOUTHEASTERN DOOR COMPANY
1A	THREE TRACK JAMB	ALUMINUM 6063-T6	SOUTHEASTERN DOOR COMPANY
1B	FOUR TRACK JAMB	ALUMINUM 6063-T6	SOUTHEASTERN DOOR COMPANY
1C	FIVE TRACK JAMB	ALUMINUM 6063-T6	SOUTHEASTERN DOOR COMPANY
1P	POCKET JAMB	ALUMINUM 6063-T6	SOUTHEASTERN DOOR COMPANY
2	TWO TRACK HEADER	ALUMINUM 6063-T6	SOUTHEASTERN DOOR COMPANY
2A	THREE TRACK HEADER	ALUMINUM 6063-T6	SOUTHEASTERN DOOR COMPANY
2B	FOUR TRACK HEADER	ALUMINUM 6063-T6	SOUTHEASTERN DOOR COMPANY
2C	FIVE TRACK HEADER	ALUMINUM 6063-T6	SOUTHEASTERN DOOR COMPANY
3	TWO TRACK SILL	ALUMINUM 6063-T6	SOUTHEASTERN DOOR COMPANY
3A	THREE TRACK SILL	ALUMINUM 6063-T6	SOUTHEASTERN DOOR COMPANY
3B	FOUR TRACK SILL	ALUMINUM 6063-T6	SOUTHEASTERN DOOR COMPANY
3C	FIVE TRACK SILL	ALUMINUM 6063-T6	SOUTHEASTERN DOOR COMPANY
4	ATLAS INTERLOCK	ALUMINUM 6063-T6	SOUTHEASTERN DOOR COMPANY
4A	ATLAS NARROW INTERLOCK	ALUMINUM 6063-T6	SOUTHEASTERN DOOR COMPANY
5	DOOR TOP RAIL	ALUMINUM 6063-T6	SOUTHEASTERN DOOR COMPANY
6	ATLAS END RAIL	ALUMINUM 6063-T6	SOUTHEASTERN DOOR COMPANY
7	ATLAS DOOR ASTRAGAL	ALUMINUM 6063-T6	SOUTHEASTERN DOOR COMPANY
8	DOOR BOTTOM RAIL	ALUMINUM 6063-T6	SOUTHEASTERN DOOR COMPANY
9	DOOR END RAIL	ALUMINUM 6063-T6	SOUTHEASTERN DOOR COMPANY
10	1/4" PILE WEATHER-STRIP	PILE W31255BNG	ULTRAFAB
11	GLAZING ADAPTER	ALUMINUM 6063-T5	SOUTHEASTERN DOOR COMPANY
12	OPTIONAL SNAP COVER	ALUMINUM 6063-T5	SOUTHEASTERN DOOR COMPANY
13	GLAZING GASKET	EXTRUDED VINYL	TEAM PLASTIC
17	1 11/16" DIAM. ROLLER	TANDEM ROLLER	AMESBURY
17A	1 11/16" DIAM. ROLLER	SINGLE ROLLER	AMESBURY
18	#2815-84	MULTI-POINT LOCK	AMESBURY
19	#2470-84	KEEPER	AMESBURY
20	ATLAS INTERLOCK REINF. (FULL LENGTH)	ALUMINUM 6063-T6	SOUTHEASTERN DOOR COMPANY
21	ANCHOR SHEAR CLIP	ALUMINUM 6063-T6	SOUTHEASTERN DOOR COMPANY
22	SEALANT VULKEN 116	POLYURETHANE	TREMCO
23	POCKET INTERLOCK	ALUMINUM 6063-T6	SOUTHEASTERN DOOR COMPANY

WEATHER STRIPPING

OPERABLE PANELS		
W1	INTERLOCK STILE	ULTRAFAB W31205 SINGLE FIN 3/8" PILE HEIGHT
W2	INTERLOCK STILE	0.638x0.382 TEAM PLASTICS BULB VINYL PART 191
W3	TOP RAIL	ULTRAFAB W31175 SINGLE FIN 3/8" PILE HEIGHT
W4	BOTTOM RAIL	ULTRAFAB W31255 SINGLE FIN 1/2" PILE HEIGHT
W5	ASTRAGAL	ULTRAFAB W31155BNG SINGLE FIN 3/8" PILE HEIGHT
FIXED PANELS		
W6	INTERLOCK STILE	ULTRAFAB W3426BNG SINGLE FIN 3/8" PILE HEIGHT
W2	INTERLOCK STILE	0.638x0.382 TEAM PLASTICS BULB VINYL PART 191
W3	TOP RAIL	ULTRAFAB W31175 SINGLE FIN 3/8" PILE HEIGHT
W4	BOTTOM RAIL	ULTRAFAB W31255 SINGLE FIN 1/2" PILE HEIGHT
FRAME		
W3	JAMB	ULTRAFAB W31175 SINGLE FIN 3/8" PILE HEIGHT
W7	SILL INT. WEEP HOLE	ORCO 1/2" WEEP DRAIN PAN PLUG PART#89080-2618

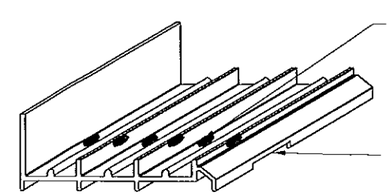

CLUSTER OF MINIMUM FOUR
1/4" DIAM WEEP HOLES
AT EA DRAIN PAN

1/8x1" OPENING

FACTORY APPLIED DRAIN PAN
LOCATED AT CENTERLINE OF EACH PANEL
SEE SHEET 2 OF 13

MANUFACTURER:

SOUTHEASTERN
Manufacturers of Impact Resistant Sliding Glass Doors

1505 COMMERCE LANE
JUPITER, FLORIDA 33458
PHONE: (561) 746-5493
FAX: (561) 575-1826

PRODUCT:
ATLAS PLUS
SERIES 5000 ALUMINUM
SLIDING GLASS DOOR
LARGE MISSILE IMPACT

Engineering:
EngCo Inc.
CA 8116
5595 Orange Dr. 201
Davie, Fl. 33314
Tel. (954) 585-0304
Fax (954) 585-5306
ENGCO@AOL.COM

PEDRO M. DE FIGUEIREDO
No. 52609
STATE OF FLORIDA
PROFESSIONAL ENGINEER

SEP 23 2014

Engineer Seal
Pedro De Figueiredo
PE 52609

MIAMI-DADE BCCO:

PRODUCT REVISED
as complying with the Florida Building Code
Acceptance No 13-1105.12
Expiration Date 6/26/18
By [signature]
Miami Dade Product Control

Date: 12/28/12
Scale: NA
Design by: PPMF

Drawing Number
13-186

SHEET
11 of 13

DOOR HARDWARE

18- DEADLOCK
1 MULTIPOINT MORTISE LOCK PER LOCK MEETING STILE
HARDWARE SUPPLIER: AMESBURY
PART #2815-84
ATTACHED TO THE DOOR WITH (2) #6X 1/4" SS FLAT HEAD SCREWS.

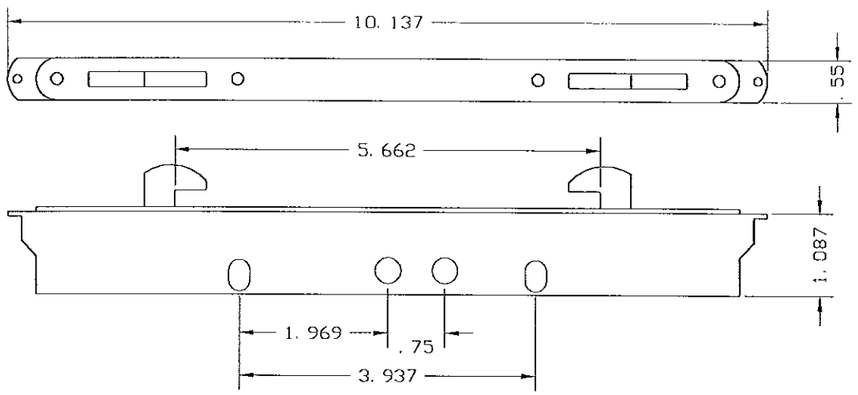

19 - STRIKE PLATE
1 KEEPER PER MEETING STILE OR JAMB
HARDWARE SUPPLIER: AMESBURY
PART #2470-84
ATTACHED AT JAMB OR ASTRAGAL RAIL
USING FOUR W/ #10-16X 1-1/2"PHSMS.

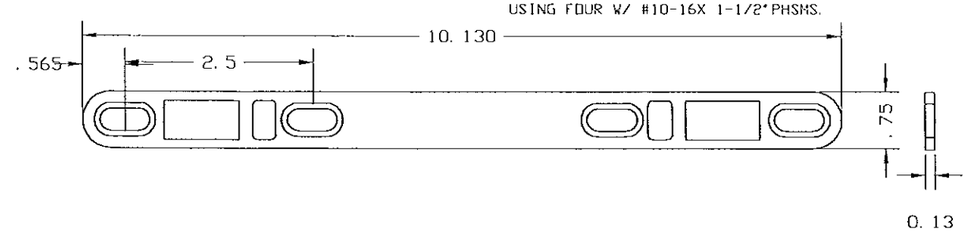

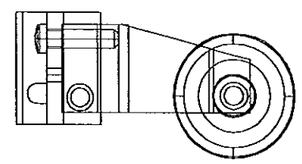

17A- SINGLE WHEEL ASSEMBLY
2 PER FIXED DOOR PANEL
HARDWARE SUPPLIER: AMESBURY
PART #1966-7000-12
ADJUSTABLE 1 11/16" DIAMETER NYLON ROLLER
ASSEMBLY WITH ALUMINUM HOUSING ATTACHED TO
THE BOTTOM RAIL USING ONE 1/4"X1 SS ROD.

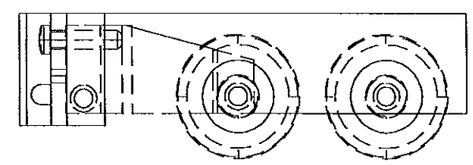

17- TANDEM WHEEL ASSEMBLY
2 PER OPERABLE DOOR PANEL
HARDWARE SUPPLIER: AMESBURY
PART #1966-7501-14
ADJUSTABLE 1 11/16" DIAMETER NYLON ROLLER
ASSEMBLY WITH ALUMINUM HOUSING ATTACHED TO
THE BOTTOM RAIL USING ONE 1/4"X1 SS ROD.

DOOR HARDWARE TYPICAL LOCATIONS (4 OR LESS PANELS)

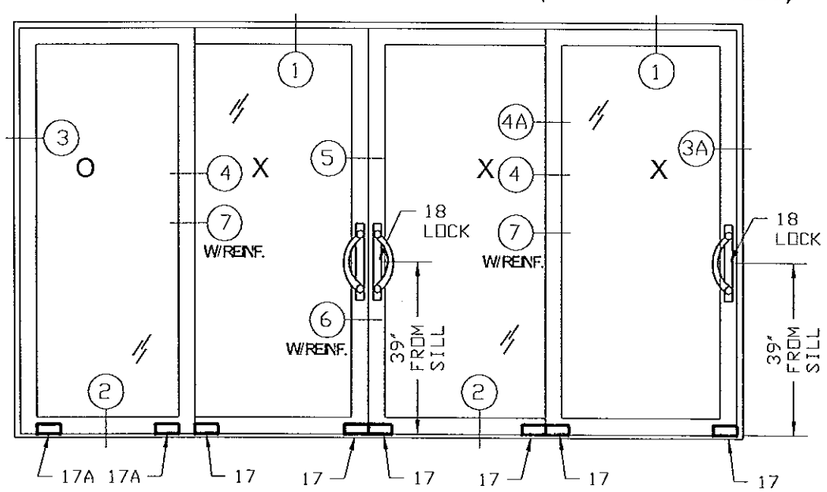

ELEVATIONS ONLY TO INDICATE HARDWARE LOCATION FOR PART NUMBERS 17, 17A AND 18. USE SHEETS 2, 2.1 AND 2.2 FOR MORE ELEVATION INFORMATION

DOOR HARDWARE TYPICAL LOCATIONS (4 OR MORE PANELS)

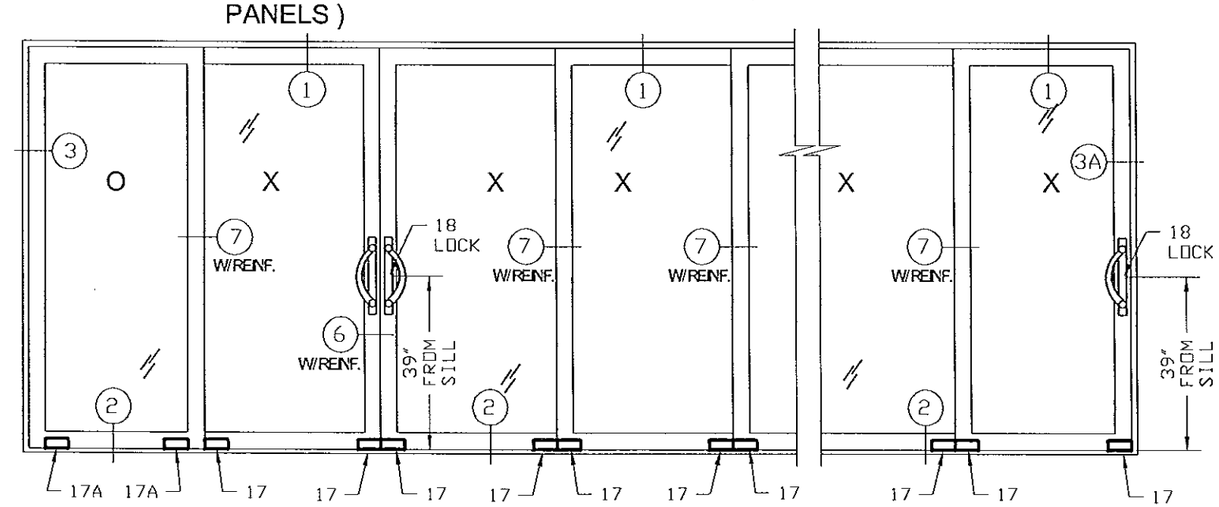

MANUFACTURER:

SOUTHEASTERN
Manufacturers of Impact Resistant Sliding Glass Doors

1505 COMMERCE LANE
JUPITER, FLORIDA 33458
PHONE: (561) 746-5493
FAX: (561) 575-1826

PRODUCT:
ATLAS PLUS
SERIES 5000 ALUMINUM
SLIDING GLASS DOOR
LARGE MISSILE IMPACT

Engineering:
EngCo Inc.
CA 8116
5595 Orange Dr. 201
Davie, FL 33314
Tel. (954) 585-0304
Fax. (954) 585-5106
ENGCO@AOL.COM

PEDRO M. DE FIGUEIREDO
No. 52609
STATE OF FLORIDA
PROFESSIONAL ENGINEER

SEP 23 2014

Engineer Seal
Pedro De Figueiredo
PE 52609

MIAMI-DADE BCCO:

PRODUCT REVISED
as complying with the Florida Building Code
Acceptance No 13-1105.12
Expiration Date 6/26/18
By Joshua J. Llanes
Miami Dade Product Control

Date: 12/28/12
Scale: NA
Design by: PPMF

Drawing Number
13-186

SHEET
12 of 13

DOOR CORNER ASSEMBLY

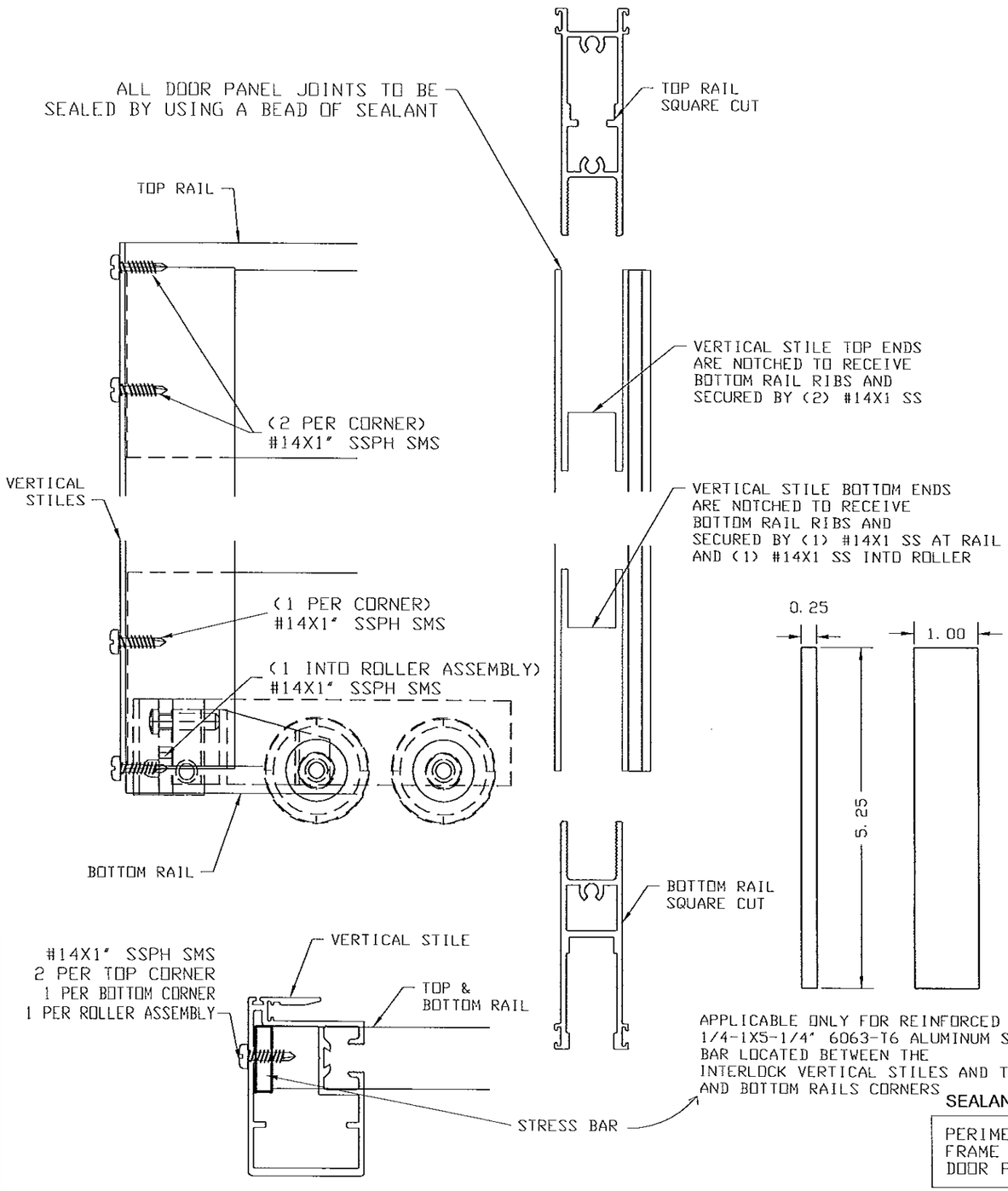

FRAMING CORNER ASSEMBLY

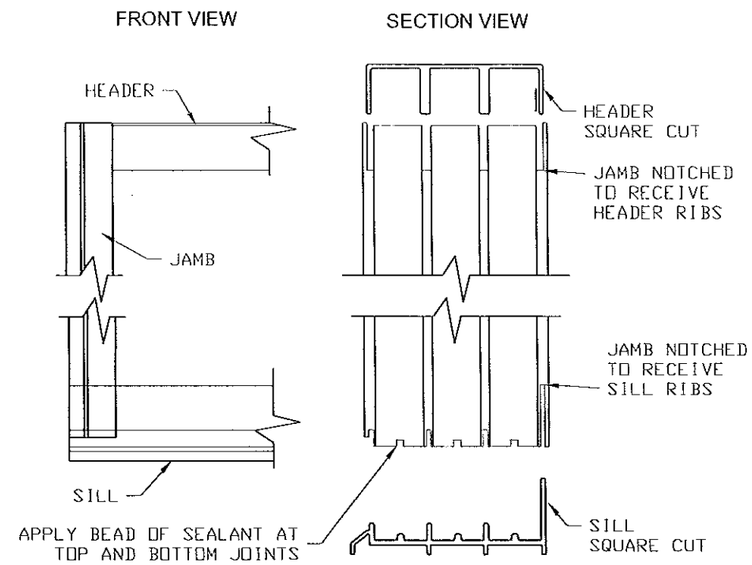

JAMB SHEAR CLIP ASSEMBLY (REAR VIEW)

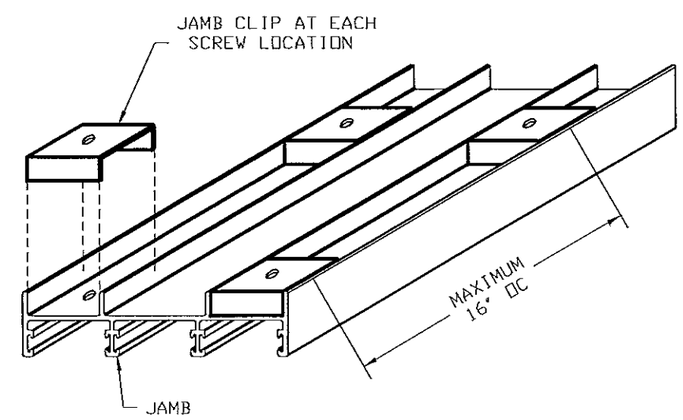

SEP 23 2014

SEALANTS

PERIMETER SEALANT	- VULKEN 116 POLYURETHANE SEALANT
FRAME JOINT SEALANT	- CRL SILICONE OR VULKEN POLYURETHANE SEALANT
DOOR PANEL JOINT SEALANT	- CRL SILICONE OR VULKEN POLYURETHANE SEALANT

MANUFACTURER:

SOUTHEASTERN
Manufacturers of Impact Resistant Sliding Glass Doors

1505 COMMERCE LANE
JUPITER, FLORIDA 33458
PHONE: (561) 746-5493
FAX: (561) 575-1826

PRODUCT:
ATLAS PLUS
SERIES 5000 ALUMINUM
SLIDING GLASS DOOR
LARGE MISSILE IMPACT

Engineering:
EngCo Inc.
CA 8116
5595 Orange Dr. 201
Davie, FL 33314
Tel: (954) 585-0304
Fax: (954) 585-5105
ENGCO@AOL.COM

PEDRO DE FIGUEIREDO
No. 52609
STATE OF FLORIDA
PROFESSIONAL ENGINEER

Engineer Seal
Pedro De Figueiredo
PE 52609

MIAMI-DADE BCCO:

PRODUCT REVISED
as complying with the Florida Building Code
Acceptance No. 13-1105.12
Expiration Date 6/26/2018
By
Miami Dade Product Control

Date: 12/28/12
Scale: NA
Design by: PPMF

Drawing Number
13-186

SHEET
13 of 13