MIAMI-DADE COUNTY
PRODUCT CONTROL SECTION
11805 SW 26 Street, Room 208
Miami, Florida 33175-2474
T (786) 315-2590 F (786) 315-2599
www.miamidade.gov/economy

DEPARTMENT OF REGULATORY AND ECONOMIC RESOURCES (RER)
BOARD AND CODE ADMINISTRATION DIVISION

NOTICE OF ACCEPTANCE (NOA)

E.S. Windows, LLC
10653 N.E. Quaybridge Ct.
Miami, FL 33138

SCOPE:

This NOA is being issued under the applicable rules and regulations governing the use of construction materials. The documentation submitted has been reviewed and accepted by Miami-Dade County RER -Product Control Section to be used in Miami Dade County and other areas where allowed by the Authority Having Jurisdiction (AHJ).

This NOA shall not be valid after the expiration date stated below. The Miami-Dade County Product Control Section (In Miami Dade County) and/or the AHJ (in areas other than Miami Dade County) reserve the right to have this product or material tested for quality assurance purposes. If this product or material fails to perform in the accepted manner, the manufacturer will incur the expense of such testing and the AHJ may immediately revoke, modify, or suspend the use of such product or material within their jurisdiction. RER reserves the right to revoke this acceptance, if it is determined by Miami-Dade County Product Control Section that this product or material fails to meet the requirements of the applicable building code.

This product is approved as described herein, and has been designed to comply with the Florida Building Code, including the High Velocity Hurricane Zone.

DESCRIPTION: Series 4000 Aluminum Sliding Glass Door w/ Reinforcements–LMI

APPROVAL DOCUMENT: Drawing No. **W03-100 Rev H,** titled "Series-4000 Aluminum Sliding Patio Door (LMI), sheets 1 through 8 of 8, prepared by Al-Farooq Corporation, dated 11/08/03 and last revised on MAR 03, 2014, signed and sealed by Javad Ahmad, P.E., bearing the Miami-Dade County Product Control Revision stamp with the Notice of Acceptance number and expiration date by the Miami-Dade County Product Control Section.

MISSILE IMPACT RATING: Large and Small Missile Impact Resistant

Limitations:

1. See DP Vs Glass types & reinforcing levels in sheet **2** for multi-panels configured SGD and sheet **3** for OX, XO and XX w/Heavy Duty reinforcing. Exterior (positive) design pressures are limited to **+70 PSF** w / **2-1/2"** sill & **+80 PSF** w/ **3-1/4"** sill.
2. Max. Door frame width not to exceed 288"

LABELING: Each unit shall bear a permanent label with the manufacturer's name or logo, Barranquilla, Columbia, state and series and following statement: "Miami-Dade County Product Control Approved", noted herein.

RENEWAL of this NOA shall be considered after a renewal application has been filed and there has been no change in the applicable building code negatively affecting the performance of this product.

TERMINATION of this NOA will occur after the expiration date or if there has been a revision or change in the materials, use, and/or manufacture of the product or process. Misuse of this NOA as an endorsement of any product, for sales, advertising or any other purposes shall automatically terminate this NOA. Failure to comply with any section of this NOA shall be cause for termination and removal of NOA.

ADVERTISEMENT: The NOA number preceded by the words Miami-Dade County, Florida, and followed by the expiration date may be displayed in advertising literature. If any portion of the NOA is displayed, then it shall be done in its entirety.

INSPECTION: A copy of this entire NOA shall be provided to the user by the manufacturer or its distributors and shall be available for inspection at the job site at the request of the Building Official.

This NOA **revises & renews NOA #12-0312.03** and consists of this page 1 and evidence pages E-1, as well as approval document mentioned above.

The submitted documentation was reviewed by **Ishaq I. Chanda, P.E.**

MIAMI-DADE COUNTY APPROVED

NOA No13-1115.03
Expiration Date: March 18, 2019
Approval Date: March 13, 2014

3/7/14

NOTICE OF ACCEPTANCE: EVIDENCE SUBMITTED

A. DRAWINGS (Submitted under from files # 12-0312.03/#09-0210.07/#08-0417.03)

1. Manufacturer's die drawings and sections.
2. Drawing No. **W03-100 Rev H,** titled "Series-4000 Aluminum Sliding Patio Door (LMI), sheets 1 through 8 of 8, prepared by Al-Farooq Corporation, dated 11/08/03 and last revised on MAR 03, 2014, signed and sealed by Javad Ahmad, P.E.

B. TESTS (Submitted under from files # 12-0312.03/#09-0210.07/#08-0417.03)

1. Test reports on 1) Air Infiltration Test, per FBC, TAS 202-94
   2) Uniform Static Air Pressure Test, Loading per FBC, TAS 202-94
   3) Water Resistance Test, per FBC, TAS 202-94
   4) Large Missile Impact Test per FBC, TAS 201-94
   5) Cyclic Wind Pressure Loading per FBC, TAS 203-94
   6) Forced Entry Test, per FBC 2411 3.2.1 and TAS 202-94

Along with marked-up drawings and installation diagram of an Aluminum Sliding Glass Door, prepared by Fenestration Testing Laboratory, Inc., Test Report No(s). **FTL-3908**, dated 10/09/03, **FTL-3909**, dated 09/26/03, **FTL-3910**, dated 09/30/03 and **FTL-4287**, dated 09/22/04, signed and sealed by Joseph Chan, P.E. and the Test Report No. **FTL-4287**, dated 09/22/04, signed and sealed by Edmundo Largaespada, P.E.

2 Additional Reference test report No. **FTL-5471**, dated 01/24/08, per TAS 201/203-94, issued by Fenestration Testing Lab, signed & sealed by Michael Wenzel, P.E.

C. CALCULATIONS

1. Anchor verification calculation dated 03-09-13 and last revised on FEB 07, 2014, complying w/ FBC 2010, prepared by Al-Farooq Corporation, signed and sealed by Javad Ahmad, P.E.
2. Glazing complies with ASTME-1300-02 & -04.

D. QUALITY ASSURANCE

1. Miami Dade Department of Regulatory and Economic Resources (RER).

E. MATERIAL CERTIFICATIONS

1. Notice of Acceptance No. **11-0624.02** issued to E.I. DuPont De Nemours & CO., Inc. for "DuPont SentryGlas ® Interlayer", expiring on 01/14/2017.
2. Notice of Acceptance No. **11-0624.01** issued to E.I. DuPont De Nemours & CO., Inc. for "DuPont Butacite PVB ® Interlayer", expiring on 12/11/2016.

F. STATEMENTS

1. Statement letter of compliance to FBC 2010 and of no financial interest issued by Al-Farooq Corp., dated 11/04/13, signed and sealed by Javad Ahmad, P.E.
2. Statement of Lab compliance, part of above test reports.
3. Distribution agreement dated 03/05/14 between ES Windows, LLC & Energia Solar, SA, and Colombia, signed by Andres Chamorro (Gen MGR) and Clara Garcia (Sales MGR), respectively on behalf of their companies.

G. OTHER

1. This NOA **revises & renews NOA # 12-0312.03,** expiring March 18, 2014.
2. Tet proposal # 07-3815, approved by BCCO.
3. Previous related NOA(s) are NOA/#09-0210.07, #08-0417.03, # 06-0606.02 and 04-1117.05.

Ishaq I. Chanda

Ishaq I. Chanda, P.E.
Product Control Examiner
NOA No. 13-1115.03
Expiration Date: March 18, 2019
Approval Date: March 13, 2014

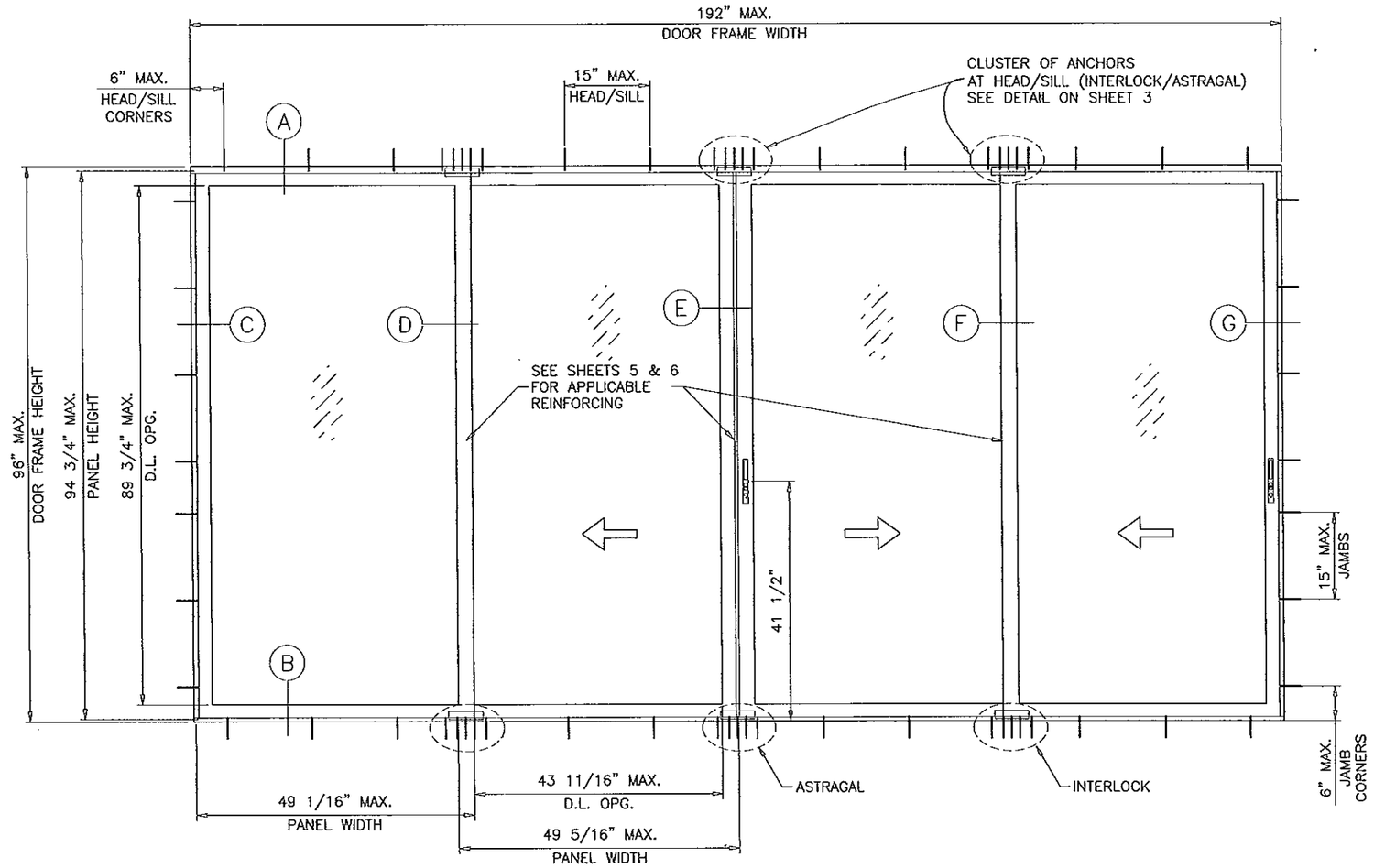

TYPICAL ELEVATION
TESTED UNIT

DAYLITE OPENINGS WIDTHS:
FIXED/LOCK STILE–INTERLOCK = PANEL WIDTH – 5.375"
INTERLOCK–ASTRAGAL = PANEL WIDTH – 5.625"

DAYLITE OPENING HEIGHT:
PANEL HEIGHT – 5.00"

PANEL HEIGHT = DOOR FRAME HEIGHT – 1.250"

PRODUCT REVIEWED
as complying with the Florida
Building Code
Acceptance No. 13-1115.03
Expiration Date MAR 18, 2019
By Ishaq I. Chanda
Miami Dade Product Control

SERIES–4000 ALUM SLIDING GLASS DOOR

DESIGN LOAD RATING FOR DOORS TO BE AS PER CHARTS SHOWN AND APPROVED CONFIGURATIONS ON SHEETS 2 AND 3.

THIS PRODUCT HAS BEEN DESIGNED AND TESTED TO COMPLY WITH THE REQUIREMENTS OF THE FLORIDA BUILDING CODE INCLUDING HIGH VELOCITY HURRICANE ZONE (HVHZ).

1BY OR 2BY WOOD BUCKS BY OTHERS, MUST BE ANCHORED PROPERLY TO TRANSFER LOADS TO THE STRUCTURE.

ANCHORS SHALL BE AS LISTED, SPACED AS SHOWN ON DETAILS, ANCHORS EMBEDMENT TO BASE MATERIAL SHALL BE BEYOND WALL DRESSING OR STUCCO.

ANCHORING OR LOADING CONDITIONS NOT SHOWN IN THESE DETAILS ARE NOT PART OF THIS APPROVAL.

A LOAD DURATION INCREASE IS USED IN DESIGN OF ANCHORS INTO WOOD ONLY.

MATERIALS INCLUDING BUT NOT LIMITED TO STEEL/METAL SCREWS, THAT COME INTO CONTACT WITH OTHER DISSIMILAR MATERIALS SHALL MEET THE REQUIREMENTS OF THE FLORIDA BLDG. CODE SECTION 2003.8.4.

DOORS GLAZED WITH LAMINATED GLASS RATED FOR LARGE & SMALL MISSILE IMPACT AND REQUIRE NO SHUTTERS.

Engr: JAVAD AHMAD
CIVIL
FLA. PE # 70592
C.A.N. 3538
MAR 0 3 2014

AL-FAROOQ CORPORATION
ENGINEERS & PRODUCT DEVELOPMENT
1235 S.W. 87 AVE
MIAMI, FLORIDA 33174
TEL. (305) 264-8100 FAX. (305) 262-6978
COMP–ANL\W03–100ES

SERIES–4000 ALUM SLIDING GLASS DOOR (L.M.I.)

E.S. WINDOWS, LLC
5220 N.W. 72 AVE. BAY #4
MIAMI, FL. 33166
TEL. (305) 624–7775 FAX. (305) 624–7777

revisions:

no	date	by	description
D	09.14.06		REV. PER BCCO COMMENTS
E	02.15.08		GLASS TYPE C ADDED
F	01.21.09		UPDATED FOR 2007 FBC
G	03.06.12		UPDATED TO 2010 FBC
H	01.02.14		REV. PER RER COMMENTS

date: 11–08–03
scale: 1/2"=1'–0"
dr. by: HAMID
chk. by:

drawing no.
W03–100

SEE SHEET 3 FOR XO OR XX DOORS WITH HEAVY REINFORCING

DESIGN LOAD CAPACITY – PSF (ALL CONFIGURATIONS SHOWN ON THIS SHEET) GLASS TYPES 'A', 'B' OR 'C'							
AVERAGE PANEL WIDTH INCHES	DOOR FRAME HEIGHT INCHES	NO REINFOR'G		MEDIUM REINFOR'G		HEAVY REINF'G	
		EXT. (+)	INT. (–)	EXT. (+)	INT. (–)	EXT. (+)	INT. (–)
30	80	70.0	80.0	70.0	80.0	70.0	80.0
36		70.0	80.0	70.0	80.0	70.0	80.0
42		–	–	70.0	80.0	70.0	80.0
48		–	–	–	–	70.0	80.0
54		–	–	–	–	70.0	80.0
30	96	–	–	70.0	80.0	70.0	80.0
36		–	–	70.0	80.0	70.0	80.0
42		–	–	–	–	70.0	80.0
48		–	–	–	–	70.0	80.0

$$\text{AVERAGE PANEL WIDTH} = \frac{\text{DOOR FRAME WIDTH}}{\text{NUMBER OF PANELS}}$$

DOOR HEIGHT AND WIDTH SIZE MUST COMPLY WITH EGRESS REQUIREMENTS PER FBC AS REQUIRED.

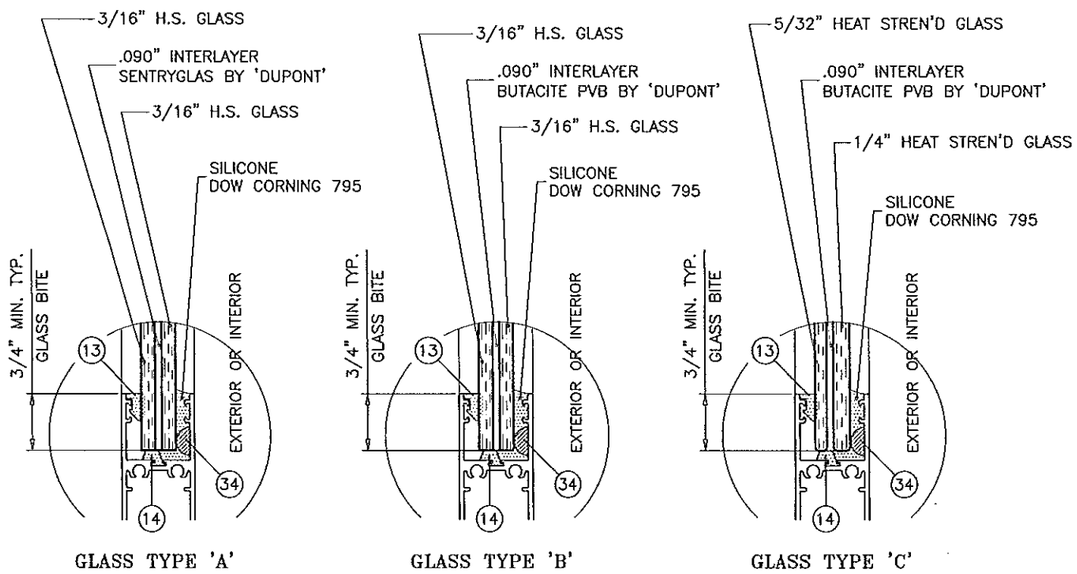

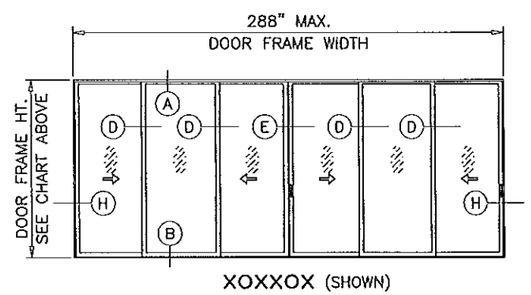

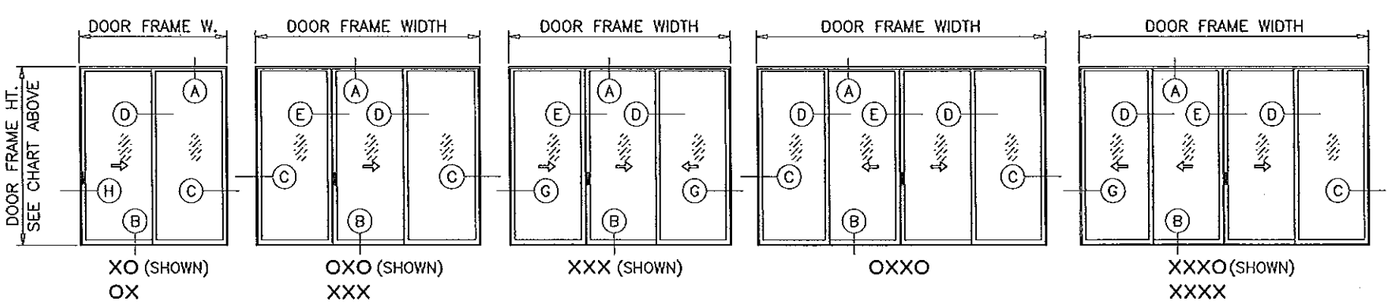

APPROVED CONFIGURATIONS

NOTE:
GLASS CAPACITIES ON THIS SHEET ARE BASED ON ASTM E1300-09 (3 SEC. GUSTS) AND FLORIDA BUILDING COMMISSION DECLARATORY STATEMENT DCA05-DEC-219

PRODUCT REVISED
to complying with the Florida Building Code
Acceptance No 13-1115.03
Expiration Date 3/18/19
By
Miami Dade Product Control

Engr: JAVAD AHMAD
CIVIL
FLA. PE # 70592
C.A.N. 3538
MAR 03 2014

AL-FAROOQ CORPORATION
ENGINEERS & PRODUCT DEVELOPMENT
1235 S.W. 87 AVE
MIAMI, FLORIDA 33174
TEL. (305) 264-8100 FAX. (305) 262-6978

COMP-ANL\W03-100ES

SERIES-4000 ALUM SLIDING GLASS DOOR (L.M.I.)

E.S. WINDOWS, LLC
5220 N.W. 72 AVE. BAY #4
MIAMI, FL. 33166
TEL. (305) 624-7775 FAX. (305) 624-7777

revisions:

no	date	by	description
D	09.14.06		REV. PER BCCO COMMENTS
E	02.15.08		GLASS TYPE C ADDED
F	01.21.09		UPDATED FOR 2007 FBC
G	03.06.12		UPDATED TO 2010 FBC
H	01.02.14		REV. PER RER COMMENTS

date: 11-08-03
scale: 1/2"=1'-0"
dr. by: HAMID
chk. by:

drawing no.
W03-100

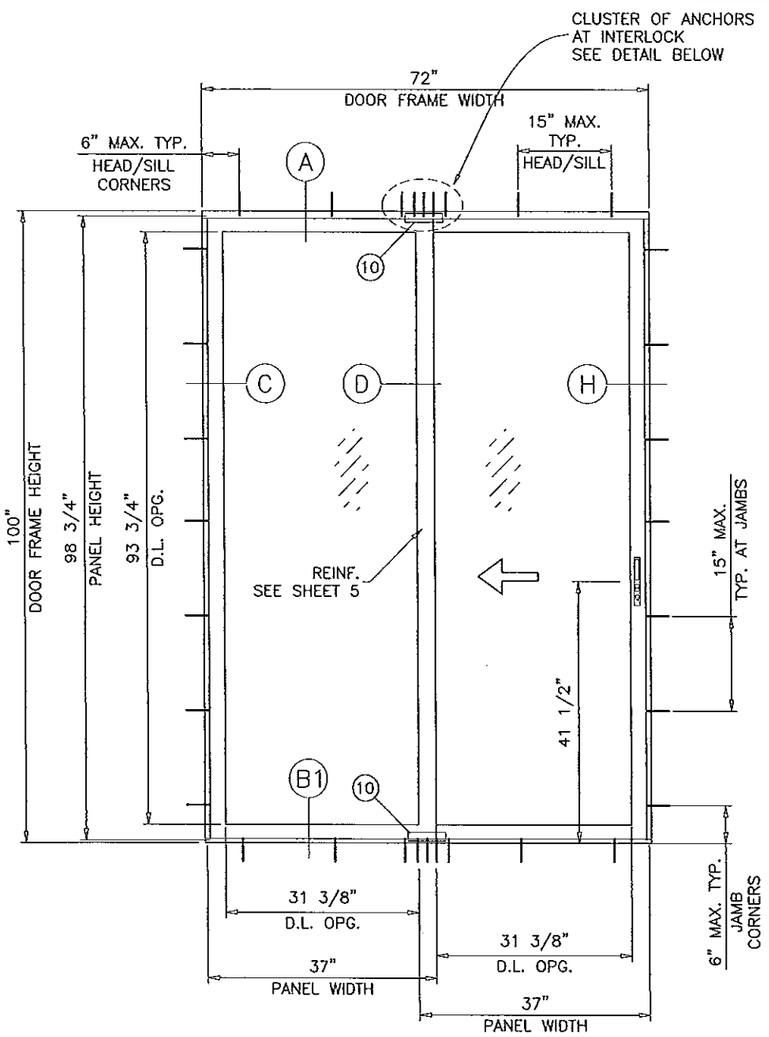

TYPICAL ELEVATION (OX) (SHOWN)

THIS SIZE TO HAVE HEAVY REINFORCING AT INTERLOCKS (SEE SHEET 5)

DESIGN LOAD CAPACITY – PSF (OX, XO OR XX ONLY) GLASS TYPES 'D' OR 'E' HEAVY REINF'G (SEE DETAIL SHEET 5)			
AVERAGE PANEL WIDTH INCHES	DOOR FRAME HEIGHT INCHES	EXT. (+)	INT. (–)
30	80	80.0	103.0
36		80.0	103.0
42		80.0	103.0
45		80.0	103.0
30	96	80.0	103.0
36		80.0	103.0
30	100	80.0	103.0
36		80.0	103.0

THE SHOWN EXT. (+) LOADS REQUIRE 3–1/4" SILL HEIGHT (DTL. B1 ON SHEET 4).

REDUCE EXT.(+) LOAD CAPACITY TO +70.0 PSF IF 2–1/2" SILL HEIGHT IS USED INT.(–) LOADS REMAIN UNCHANGED.

$$\text{AVERAGE PANEL WIDTH} = \frac{\text{DOOR FRAME WIDTH}}{\text{NUMBER OF PANELS}}$$

DOOR HEIGHT AND WIDTH SIZE MUST COMPLY WITH EGRESS REQUIREMENTS PER FBC AS REQUIRED.

PRODUCT REVISED
in complying with the Florida Building Code
Application No. 13-1115.03
Expiration Date 3-13-19
By: Shaw J. Chand

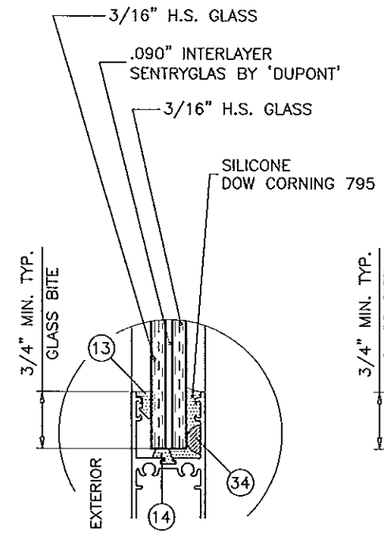

GLASS TYPE 'D'

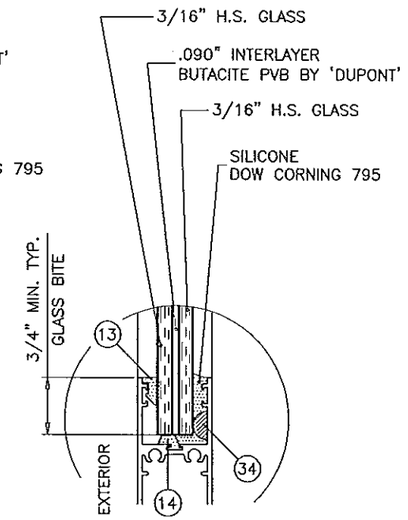

GLASS TYPE 'E'

NOTE:
GLASS CAPACITIES ON THIS SHEET ARE BASED ON ASTM E1300–09 (3 SEC. GUSTS) AND FLORIDA BUILDING COMMISSION DECLARATORY STATEMENT DCA05–DEC–219

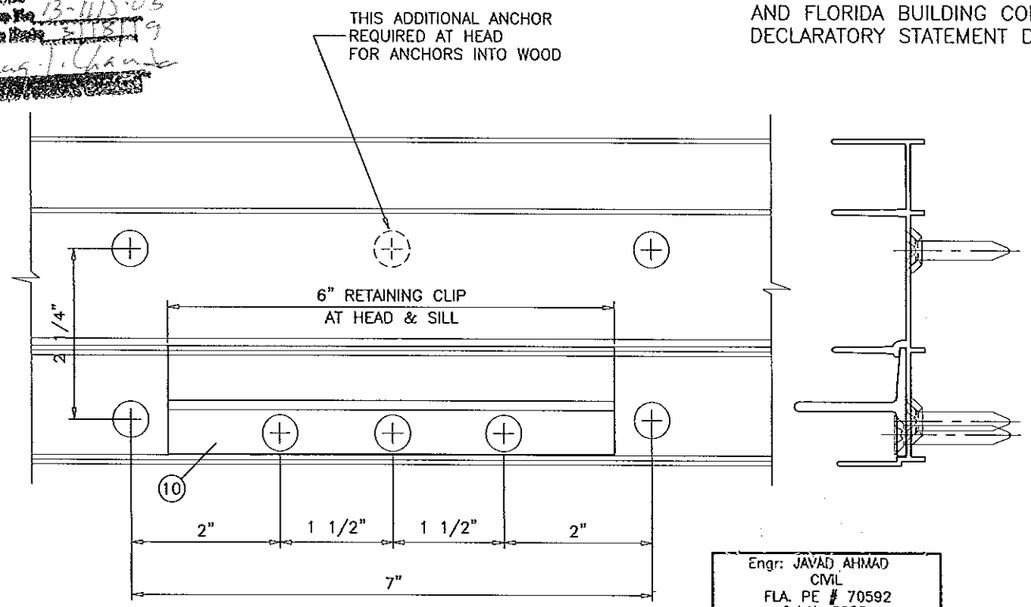

DETAIL CLUSTER OF ANCHORS AT INTERLOCK/ASTRAGAL ENDS

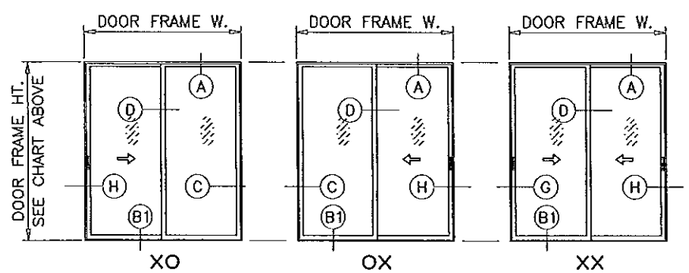

APPROVED CONFIGURATIONS

Engr: JAVAD AHMAD
CIVIL
FLA. PE # 70592
C.A.N. 3538

MAR 03 2014

AL-FAROOQ CORPORATION
ENGINEERS & PRODUCT DEVELOPMENT
1235 S.W. 87 AVE
MIAMI, FLORIDA 33174
TEL. (305) 264-8100 FAX. (305) 262-6978
COMP-ANL\W03-100ES

SERIES-4000 ALUM SLIDING GLASS DOOR (L.M.I.)

E.S. WINDOWS, LLC
5220 N.W. 72 AVE. BAY #4
MIAMI, FL. 33166
TEL. (305) 624-7777 FAX. (305) 624-7777

revisions:

no	date	by	description
D	09.14.06		REV. PER BCCO COMMENTS
E	02.15.08		CHART REV.
F	01.21.09		UPDATED FOR 2007 FBC
G	03.06.12		UPDATED TO 2010 FBC
H	01.02.14		REV. PER RER COMMENTS

date: 11-08-03
scale: 1/2"=1'-0"
dr. by: HAMID
chk. by:

drawing no.
W03-100

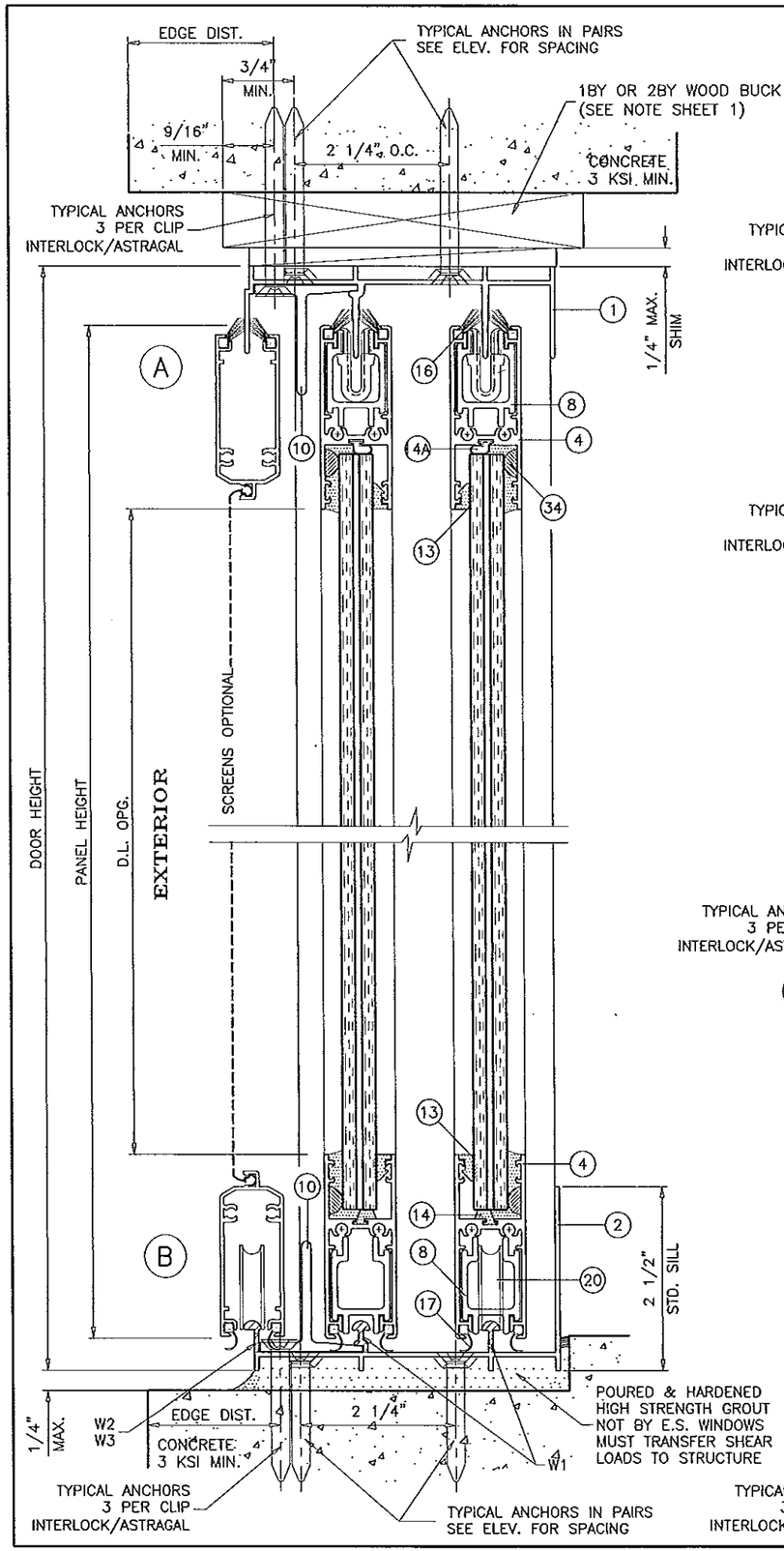

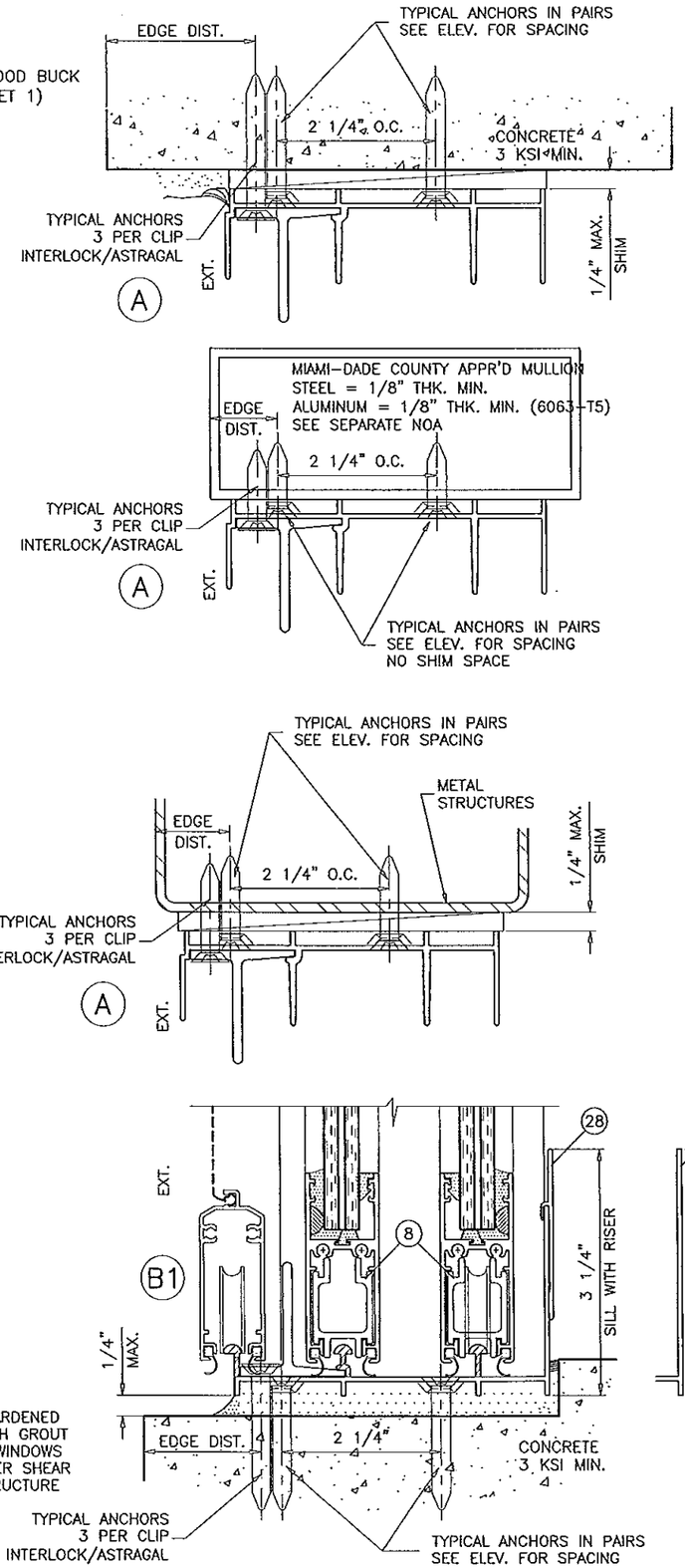

WOOD BUCKS AND METAL STRUCTURE NOT BY E.S. WINDOWS MUST SUSTAIN LOADS IMPOSED BY GLAZING SYSTEM AND TRANSFER THEM TO THE BUILDING STRUCTURE.

TYPICAL ANCHORS: SEE ELEV. FOR SPACING

1/4" DIA. ULTRACON BY 'ELCO' (Fu=177 KSI, Fy=155 KSI)

INTO 2BY WOOD BUCKS OR WOOD STRUCTURES
1-1/2" MIN. PENETRATION INTO WOOD

THRU 1BY BUCKS INTO CONC. OR MASONRY
1-1/4" MIN. EMBED INTO CONCRETE (HEAD/SILL)
1-1/4" MIN. EMBED INTO CONC. OR MASONRY (JAMBS)

DIRECTLY INTO CONC. OR MASONRY
1-1/2" MIN. EMBED INTO CONCRETE (HEAD/SILL)
1-1/4" MIN. EMBED INTO CONC. OR MASONRY (JAMBS)

1/4" DIA. TEKS OR SELF DRILLING SCREWS (GRADE 5 CRS)

INTO METAL STRUCTURES

STEEL : 12 GA. MIN. (Fy = 36 KSI MIN.)
ALUMINUM : 1/8" THK. MIN. (6063-T5 MIN.)
(STEEL IN CONTACT WITH ALUMINUM TO BE PLATED OR PAINTED)

#12 SMS OR SELF DRILLING SCREWS (GRADE 2 CRS)

INTO MIAMI-DADE COUNTY APPROVED MULLIONS (MIN. THK. = 1/8") (NO SHIM SPACE)

TYPICAL EDGE DISTANCE

INTO CONCRETE AND MASONRY = 2-1/2" MIN.
INTO WOOD STRUCTURE = SEE DETAIL (A) FOR HEADER
SEE DETAIL (C) FOR JAMBS
INTO METAL STRUCTURE = 3/4" MIN.

CONCRETE AT HEAD, SILL OR JAMBS f'c = 3000 PSI MIN.
C-90 HOLLOW/FILLED BLOCK AT JAMBS f'm = 2000 PSI MIN.

SEALANT:

ALL JOINTS AND FRAME CONNECTIONS SEALED WITH WHITE/ALUMINUM COLORED SILICONE.

WEEPHOLES:

W1 = 1-3/4" WEEP NOTCH AT EACH END
W2 = 3/4" WEEP NOTCH AT EACH END
W3 = 3" X 1/4" WEEP HOLES AT 2" FROM EACH END

PRODUCT REVISED
In complying with the Florida Building Code
Acceptance No 23115.03
Expiration Date 3/15/19
By Isaac Chavez
Miami-Dade Product Control

Engr: JAVAD AHMAD
CIVIL
FLA. PE # 70592
C.A.N. 3538

AL-FAROOQ CORPORATION
ENGINEERS & PRODUCT DEVELOPMENT
1235 S.W. 87 AVE
MIAMI, FLORIDA 33174
TEL. (305) 264-8100 FAX. (305) 262-6978
COMP-ANL\W03-100ES

SERIES-4000 ALUM SLIDING GLASS DOOR (L.M.I.)

E.S. WINDOWS, LLC
5220 N.W. 72 AVE. BAY #4
MIAMI, FL. 33166
TEL. (305) 624-7775 FAX. (305) 624-7777

revisions:

no	date	by	description
D	09.14.06		REV. PER BCCO COMMENTS
E	02.15.08		NO CHANGE THIS SHEET
F	01.21.09		UPDATED FOR 2007 FBC
G	03.06.12		UPDATED TO 2010 FBC
H	01.02.14		REV. PER RER COMMENTS

date: 11-08-03
scale: 1/2" = 1"
dr. by: HAMID
chk. by:

drawing no.
W03-100

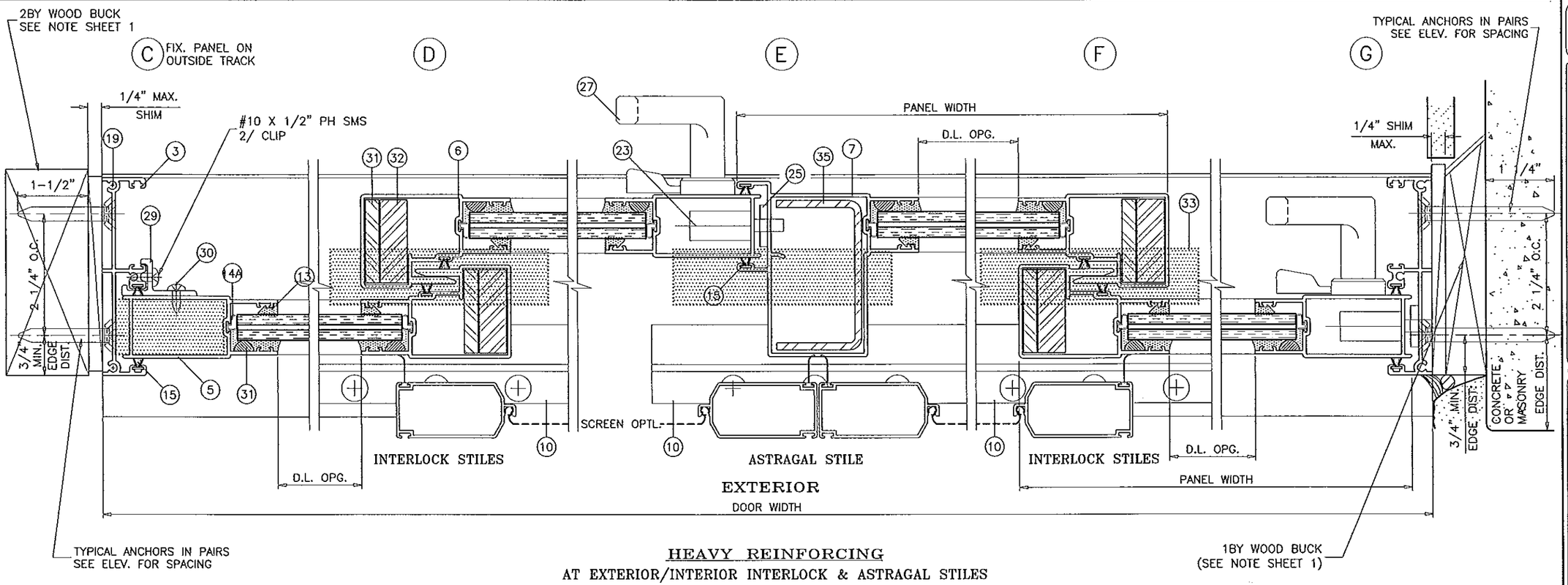

HEAVY REINFORCING

AT EXTERIOR/INTERIOR INTERLOCK & ASTRAGAL STILES

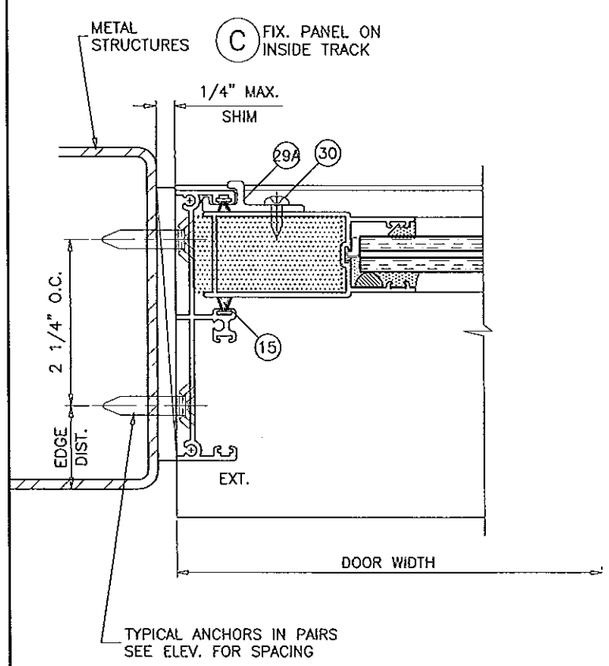

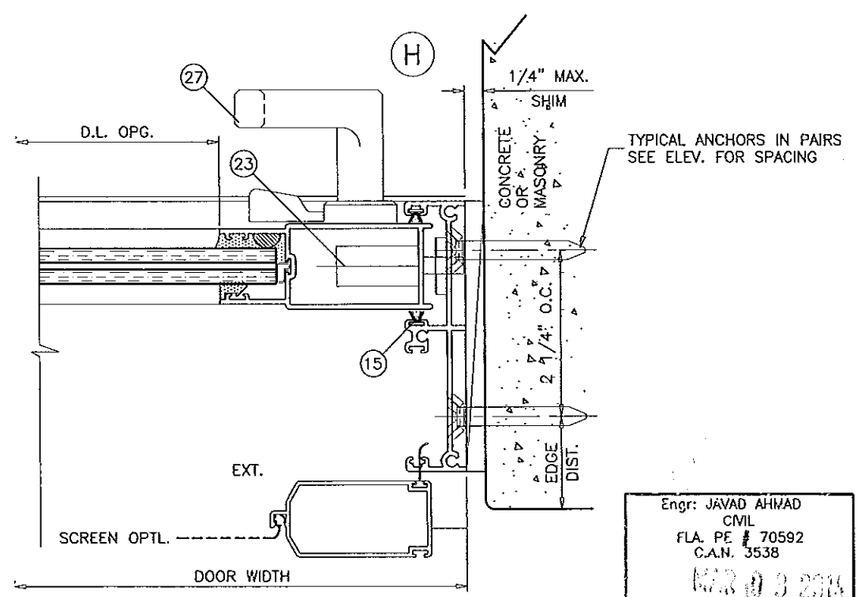

PRODUCT REVIEWED
in complying with the Florida Building Code
Acceptance No 13-1115.03
Expiration Date 3/15/14
By [illegible]
Miami Dade Product Control

Engr: JAVAD AHMAD
CIVIL
FLA. PE # 70592
C.A.N. 3538
MAR 03 2014

AL-FAROOQ CORPORATION
ENGINEERS & PRODUCT DEVELOPMENT
1235 S.W. 87 AVE
MIAMI, FLORIDA 33174
TEL (305) 264-8100 FAX. (305) 262-6978
COMP-ANL.W03-100ES

SERIES-4000 ALUM SLIDING GLASS DOOR (L.M.I.)

E.S. WINDOWS, LLC
5220 N.W. 72 AVE. BAY #4
MIAMI, FL. 33166
TEL. (305) 624-7775 FAX. (305) 624-7777

revisions:

no	date	by	description
D	09.14.06		REV. PER BCCO COMMENTS
E	02.15.08		DTL. ADDED
F	01.21.09		UPDATED FOR 2007 FBC
G	03.06.12		UPDATED TO 2010 FBC
H	01.02.14		REV. PER RER COMMENTS

date: 11-08-03
scale: 1/2" = 1"
dr. by: HAMID
chk. by:

drawing no.
W03-100

sheet 5 of 8

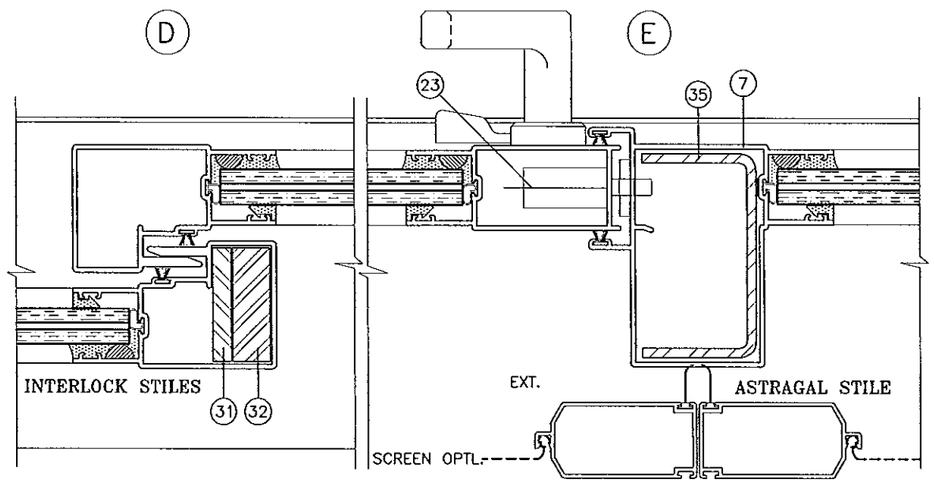

MEDIUM REINFORCING
AT EXT. INTERLOCK & ASTRAGAL STILES

ITEM #	PART #	QUANTITY	DESCRIPTION	MATERIAL	MANF./SUPPLIER/REMARKS
1	ES-4001-1	1	FRAME HEAD	6063-T6	–
2	ES-4002-1	1	STD. FRAME SILL	6063-T6	–
2A	–	1	HI--RISE FRAME SILL	6063-T6	--
3	ES-4003-1	1	FRAME JAMB	6063-T6	–
4	ES-4004-1	2/ PANEL	TOP AND BOTTOM RAIL	6063-T5	–
5	ES-4005-1	AS REQD.	LOCK STILE	6063-T5	–
6	ES-4006-1	AS REQD.	INTERLOCK	6063-T5	--
7	ES--4007--1	AS REQD.	FEMALE ASTRAGAL	6063-T5	–
8	ES-4008	AS REQD.	TOP & BOTTOM RAIL STIFFENER	6063-T6	–
9	ES-4009	2/ PANEL	PANEL GUIDE (TOP ONLY)	CELCON	NOT SHOWN
10	ES-4010	2/ PANEL	RETAINER CLIP, 6" LONG	6063-T6	–
13	27--445	AS REQD.	GLAZING WEDGE GASKET	EPDM	DUROMETER 75±5 SHORE A, SOLUCIONESENCAUCHO
14	27-448	AS REQD.	BOTTOM RAIL GLASS STOP	EPDM	DUROMETER 68±5 SHORE A, SOLUCIONESENCAUCHO
14A	27-449	AS REQD.	TOP RAIL & STILES GLASS STOP	EPDM	DUROMETER 75±5 SHORE A, SOLUCIONESENCAUCHO
15	W23241NK	AS REQD.	STILE & JAMB W'STRIPPING	–	GLASS PANELS, ULTRAFAB
16	Q26647DK	AS REQD.	TOP RAIL W'STRIPPING	–	GLASS PANELS, ULTRAFAB
17	ES-4015	AS REQD.	BOTTOM RAIL W'STRIPPING	VINYL	GLASS PANELS
19	#10X1-1/4" PH SMS	8/ PANEL	PANEL ASSY SCREWS	–	GLASS PANELS
19A	#10X1" FH SMS	2/ CORNER	FRAME ASSY SCREWS	–	–
20	TA-35-1935-4281	2/ MOV. PANEL	GLASS PANEL ROLLER ASSY.	ST. STEEL	1-1/4" O.D. WHEELS
21	#10X1-1/4" PH SMS	1/ ROLLER	ROLLER INST. SCREWS	–	GLASS PANELS ONLY
23	2300-10SS	1/ MOV. PANEL	3 PLY METALLIC HOOK LOCK	ST. STEEL	–
24	–	2/ LOCK	LOCK INSTALLATION SCREW	–	#6-32 X 1/2" FH MS, ST. STEEL
25	537	1/ LOCK	LOCK STRIKE PLATE	PLATED STEEL	–
26	#10 PH SMS	2/ LOCK	STRIKE PLATE MOUNT. SCREW	–	NOT SHOWN
27	#623Z	1/ LOCK	INTERIOR AND EXTERIOR PULL	–	(3) #6-32 X 1/2" FH MS, ST. STEEL
28	ES4028	AS REQD.	SILL RISER	6063-T5	–
29	ES-4017	2/ PANEL	FIXED PANEL CLIP (OUTSIDE PANEL)	6063-T5	--
29A	ES-4020	2/ PANEL	FIXED PANEL CLIP (INSIDE PANEL)	6063-T5	FOR OXO DOORS
30	#10X1/2" PH SMS	2/ CLIP	FIXED PANEL CLIP FASTENER	–	–
31	–	AS REQD.	1/4" X 1-1/2" REINFORCING BAR	36 KSI STEEL	LENGTH = PANEL HT. – 6.5"
32	–	AS REQD.	1/2" X 1-1/2" REINFORCING BAR	36 KSI STEEL	LENGTH = PANEL HT. – 6.5"
33	P38024FK	AS REQD.	3" LONG SELF ADHESIVE PILE PAD	WOOL	AT HEAD AND SILL
34	–	2/ SIDE	BUMPON	NEOPRENE	–
35	–	AS REQD.	ASTRAGAL REINFORCING	36 KSI STEEL	LENGTH = PANEL HT. – 14"

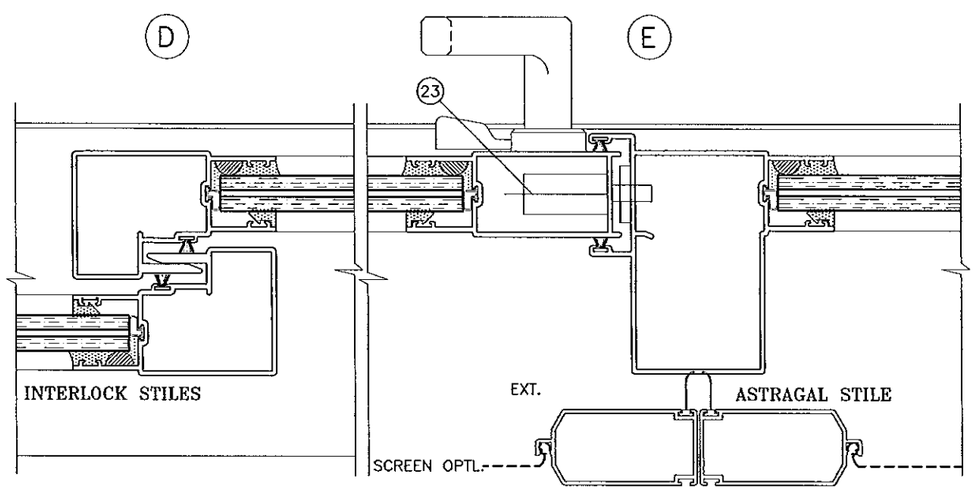

NO REINFORCING

PRODUCT REVISED
to complying with the Florida Building Code
Acceptance No 13-1115.03
Expiration Date 3/19/19
By [signature]
Miami Dade Product Control

Engr: JAVAD AHMAD
CIVIL
FLA. PE # 70592
C.A N. 3538

AL-FAROOQ CORPORATION
ENGINEERS & PRODUCT DEVELOPMENT
1235 S.W. 87 AVE
MIAMI, FLORIDA 33174
TEL. (305) 264-8100 FAX. (305) 262-6978
COMP-ANL\W03-100ES

SERIES-4000 ALUM SLIDING GLASS DOOR (L.M.I.)

E.S. WINDOWS, LLC
5220 N.W. 72 AVE. BAY #4
MIAMI, FL. 33166
TEL. (305) 624-7775 FAX. (305) 624-7777

revisions:

no	date	by	description
D	09.14.06		REV. PER BCCO COMMENTS
E	02.15.08		BILL OF MATERIALS REV.
F	01.21.09		UPDATED FOR 2007 FBC
G	03.06.12		NO CHANGE THIS SHEET
H	01.02.14		REV. PER RER COMMENTS

date: 11-08-03
scale: 1/2" = 1"
dr. by: HAMID
chk. by:

drawing no.
W03-100

sheet 6 of 8

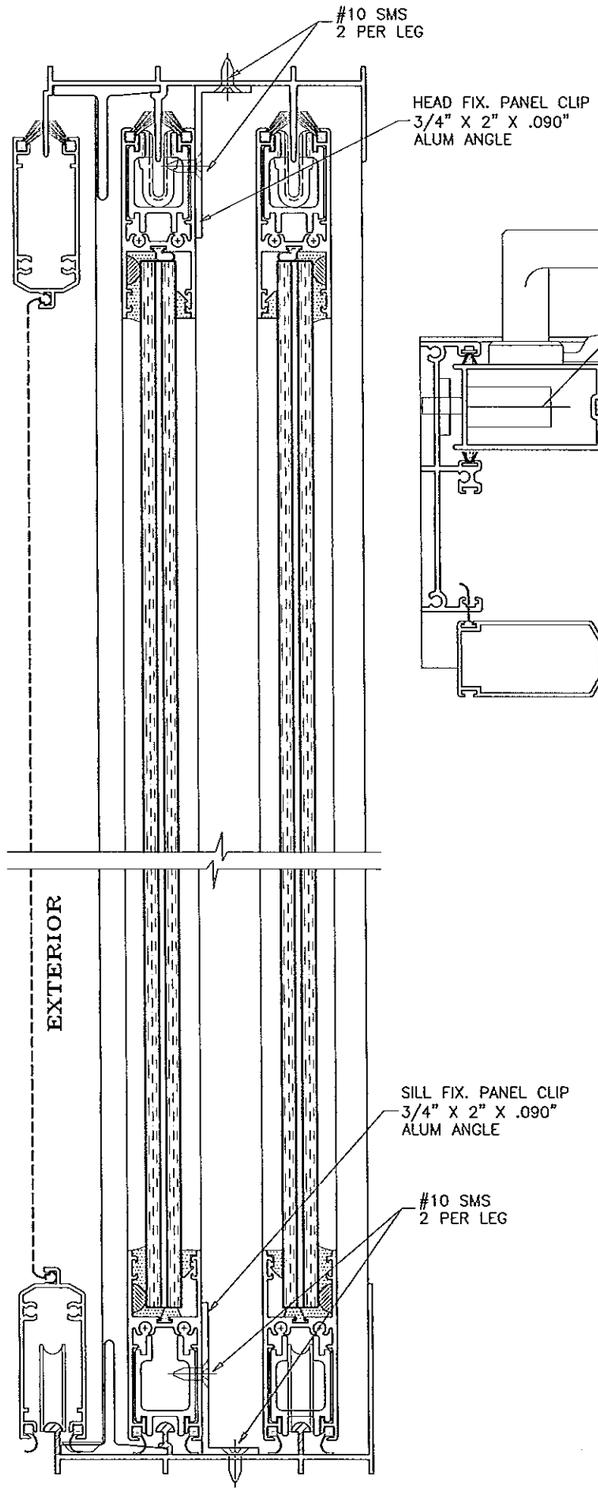

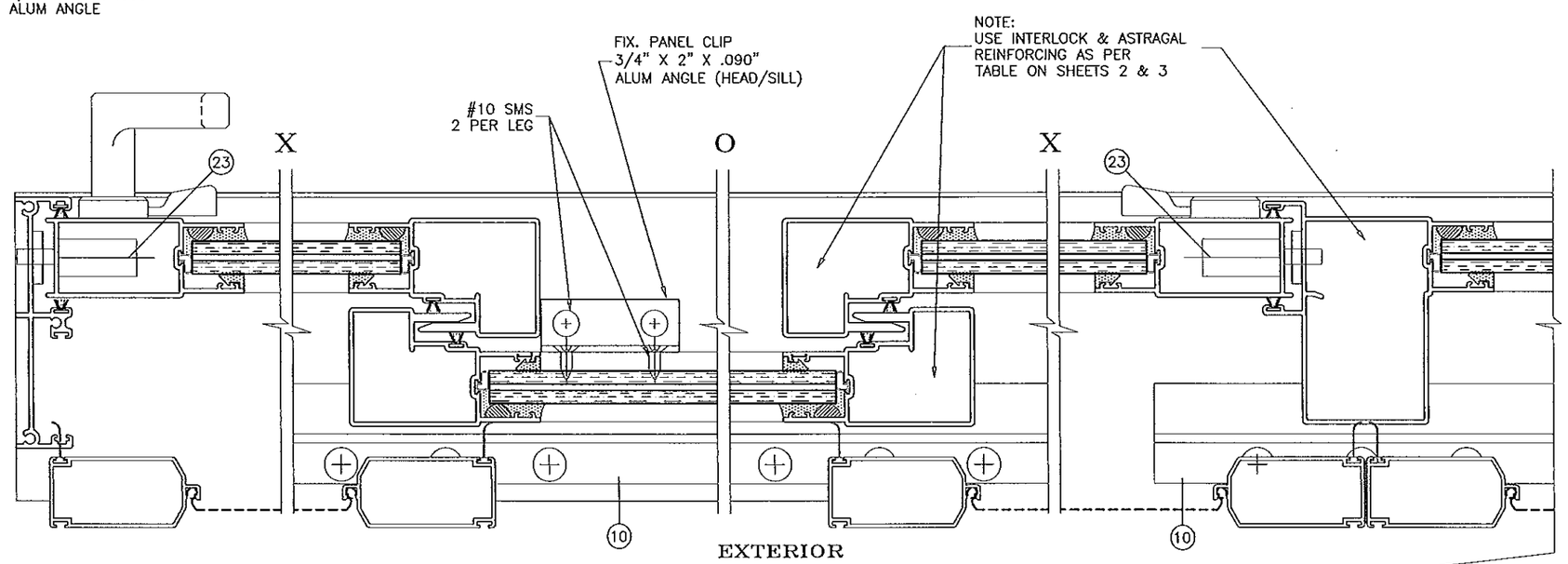

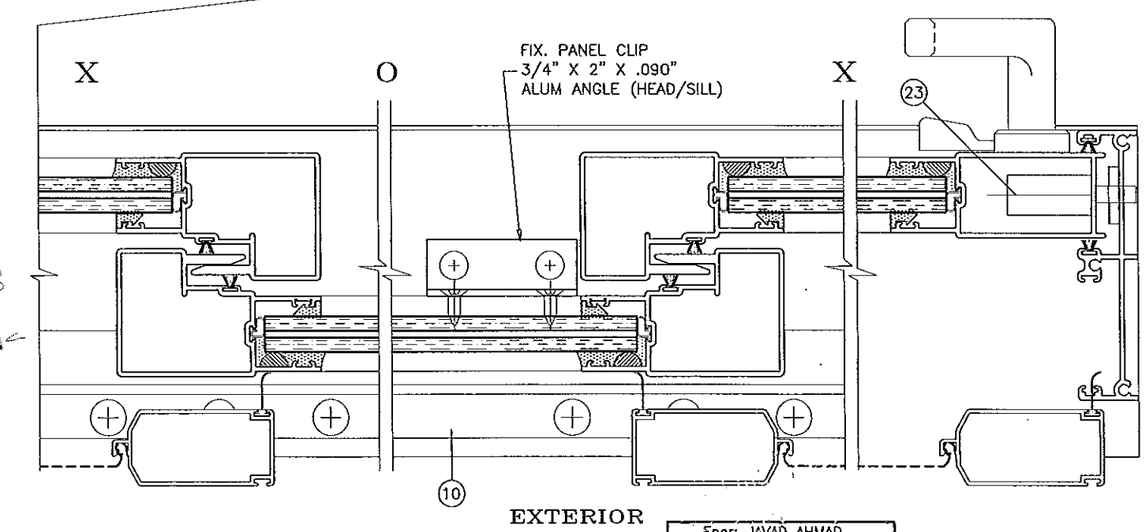

PRODUCT REVISED
as complying with the Florida
Building Code
Acceptance No 13-1115.03
Expiration Date 3/13/19
By
Miami-Dade Product Control

XOXXOX CONFIGURATION

SHOWN FOR ILLUSTRATION ONLY SEE SHEETS 4 & 5 FOR INSTALLATION DETAILS
NON-REINF. INTERLOCK/ASTRAGAL SHOWN SEE CHART ON SHEET 2 FOR REINFORCING REQUIREMENTS

Engr: JAVAD AHMAD
CIVIL
FLA. PE # 70592
C.A.N. 3538

AL-FAROOQ CORPORATION
ENGINEERS & PRODUCT DEVELOPMENT
1235 S.W. 87 AVE
MIAMI, FLORIDA 33174
TEL. (305) 264-8100 FAX. (305) 262-6978

COMP-ANL\W03-100ES

SERIES-4000 ALUM SLIDING GLASS DOOR (L.M.I.)

E.S. WINDOWS, LLC
5220 N.W. 72 AVE. BAY #4
MIAMI, FL. 33166
TEL. (305) 624-7775 FAX. (305) 624-7777

revisions:

no	date	by	description
D	09.14.06		REV. PER BCCO COMMENTS
E	02.15.08		NO CHANGE THIS SHEET
F	01.21.09		NO CHANGE THIS SHEET
G	03.06.12		NO CHANGE THIS SHEET
H	01.02.14		REV. PER RER COMMENTS

date: 11-08-03
scale: 1/2" = 1"
dr. by: HAMID
chk. by:

drawing no.
W03-100

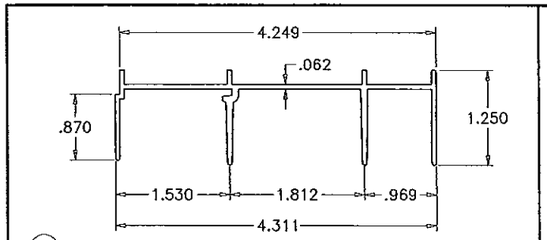

(1) FRAME HEAD

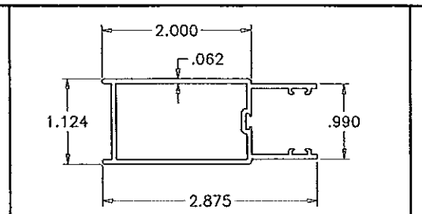

(5) LOCK STILE

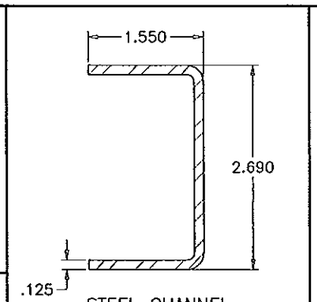

STEEL CHANNEL

(35) ASTRAGAL REINFORCING

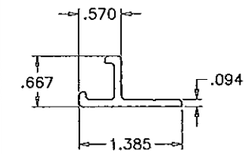

(29) OUTSIDE PANEL FIXED PANEL CLIP

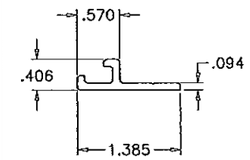

(29A) INSIDE PANEL FIXED PANEL CLIP

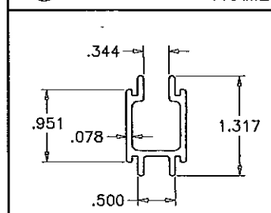

(8) TOP/BOTTOM RAIL STIFFENER

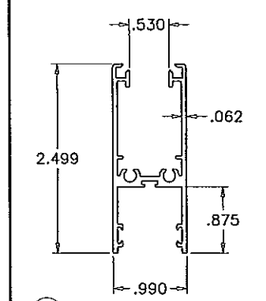

(4) PANEL TOP/BOTTOM RAIL

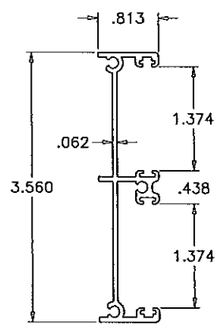

(3) FRAME JAMB

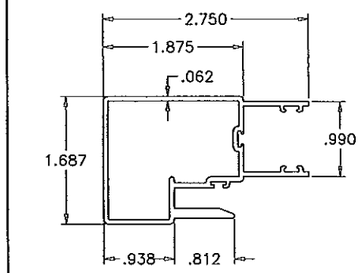

(6) INTERLOCK STILE

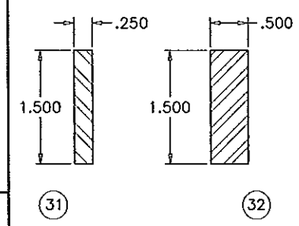

(31) (32) INTERLOCK REINFORCINGS

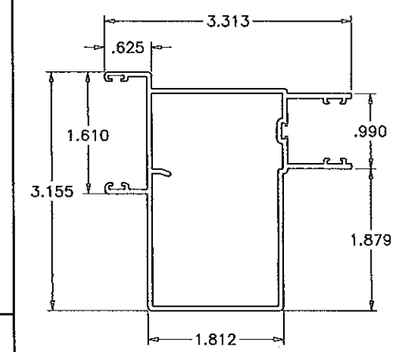

(7) ASTRAGAL STILE

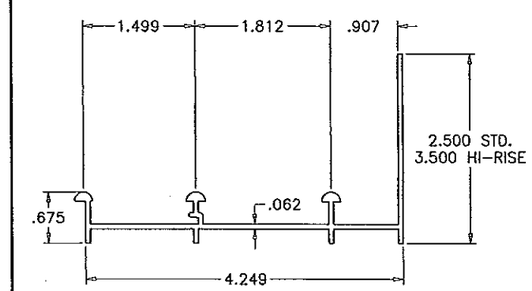

(2) FRAME SILL

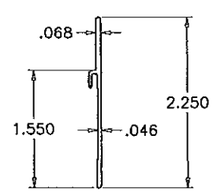

(28) SILL RISER

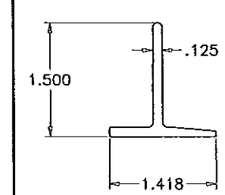

(10) RETAINER CLIP

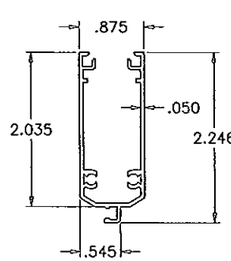

SCREEN TOP/BOTTOM RAIL

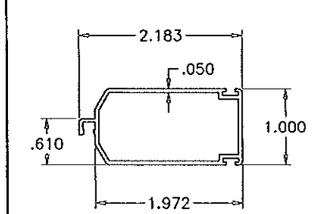

SCREEN STILE

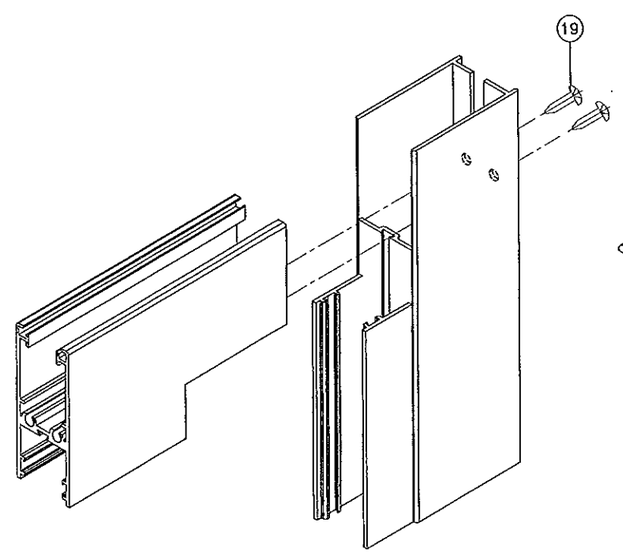

PANEL CORNER

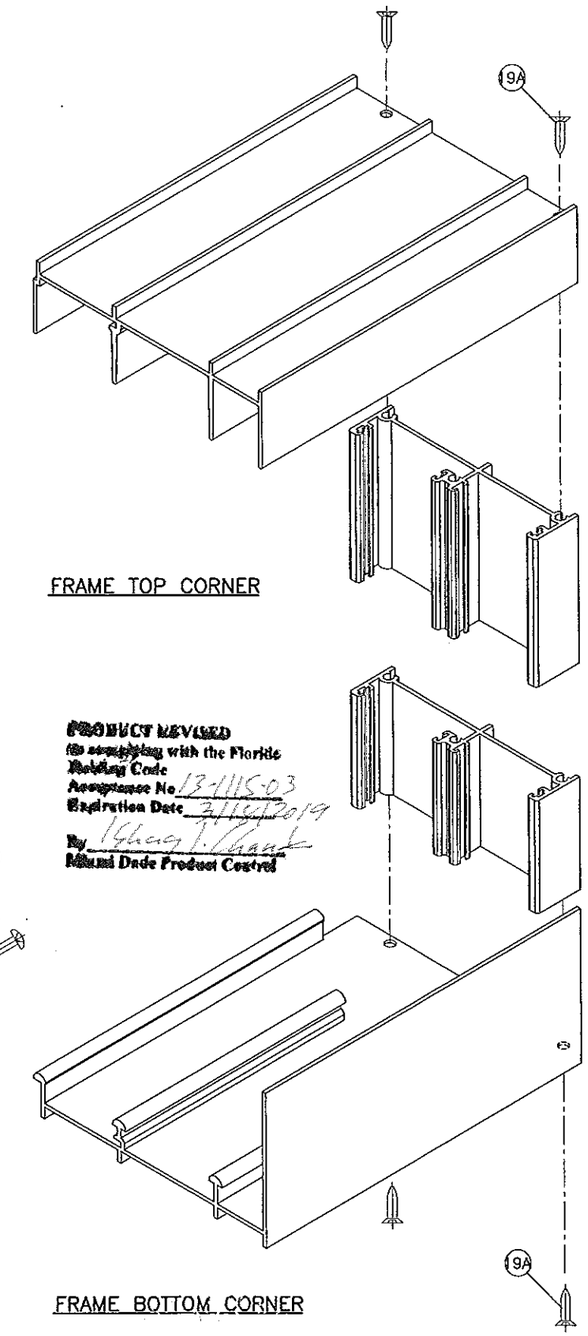

FRAME TOP CORNER

FRAME BOTTOM CORNER

PRODUCT REVIEWED
in compliance with the Florida
Building Code
Acceptance No. 13-1115.03
Expiration Date 3/14/2019
By
Miami Dade Product Control

Engr: JAVAD AHMAD
CIVIL
FLA. PE # 70592
C.A.N. 3538

AL-FAROOQ CORPORATION
ENGINEERS & PRODUCT DEVELOPMENT
1235 S.W. 87 AVE
MIAMI, FLORIDA 33174
TEL. (305) 264-8100 FAX. (305) 262-6978
COMP-ANL\W03-100ES

SERIES-4000 ALUM SLIDING GLASS DOOR (L.M.I.)

E.S. WINDOWS, LLC
5220 N.W. 72 AVE. BAY #4
MIAMI, FL. 33166
TEL. (305) 624-7775 FAX. (305) 624-7777

revisions:

no	date	by	description
D	09.14.06		REV. PER BCCO COMMENTS
E	02.15.08		CLIP ADDED
F	01.21.09		NO CHANGE THIS SHEET
G	03.06.12		NO CHANGE THIS SHEET
H	01.02.14		REV. PER RER COMMENTS

date: 11-08-03
scale: 1/2" = 1"
dr. by: HAMID
chk. by:

drawing no.
W03-100

sheet 8 of 8