MIAMI-DADE COUNTY, FLORIDA
PRODUCT CONTROL SECTION

DEPARTMENT OF REGULATORY AND ECONOMIC RESOURCES (RER)
BOARD AND CODE ADMINISTRATION DIVISION

11805 SW 26 Street, Room 208
T (786) 315-2590 F (786) 315-2599
www.miamidade.gov/economy

NOTICE OF ACCEPTANCE (NOA)

PGT Industries, Inc.
1070 Technology Drive
North Venice, FL 34275

SCOPE:

This NOA is being issued under the applicable rules and regulations governing the use of construction materials. The documentation submitted has been reviewed and accepted by Miami-Dade County RER-Product Control Section to be used in Miami-Dade County and other areas where allowed by the Authority Having Jurisdiction (AHJ).

This NOA shall not be valid after the expiration date stated below. The Miami-Dade County Product Control Section (In Miami-Dade County) and/ or the AHJ (in areas other than Miami-Dade County) reserve the right to have this product or material tested for quality assurance purposes. If this product or material fails to perform in the accepted manner, the manufacturer will incur the expense of such testing and the AHJ may immediately revoke, modify, or suspend the use of such product or material within their jurisdiction. RER reserves the right to revoke this acceptance, if it is determined by Miami-Dade County Product Control Section that this product or material fails to meet the requirements of the applicable building code.

This product is approved as described herein, and has been designed to comply with the Florida Building Code, including the High Velocity Hurricane Zone.

DESCRIPTION: Series "PW2720" PVC Fixed Window – L.M.I.

APPROVAL DOCUMENT: Drawing No. **MD-2720.1,** titled "Premiervue Fixed Window NOA", sheets 1 through 9 of 9, dated 10/20/13, prepared by manufacturer, signed and sealed by Anthony Lynn Miller, P.E., bearing the Miami-Dade County Product Control Section Revision stamp with the Notice of Acceptance number and expiration date by the Miami-Dade County Product Control Section.

MISSILE IMPACT RATING: Large and Small Missile Impact Resistant

LABELING: Each unit shall bear a permanent label with the manufacturer's name or logo, city, state, model/series, and following statement: "Miami-Dade County Product Control Approved" and American Architectural Manufacturers Association Permanent Label Requirements, unless otherwise noted herein.

RENEWAL of this NOA shall be considered after a renewal application has been filed and there has been no change in the applicable building code negatively affecting the performance of this product.

TERMINATION of this NOA will occur after the expiration date or if there has been a revision or change in the materials, use, and/ or manufacture of the product or process. Misuse of this NOA as an endorsement of any product, for sales, advertising or any other purposes shall automatically terminate this NOA. Failure to comply with any section of this NOA shall be cause for termination and removal of NOA.

ADVERTISEMENT: The NOA number preceded by the words Miami-Dade County, Florida, and followed by the expiration date may be displayed in advertising literature. If any portion of the NOA is displayed, then it shall be done in its entirety.

INSPECTION: A copy of this entire NOA shall be provided to the user by the manufacturer or its distributors and shall be available for inspection at the job site at the request of the Building Official.

This NOA **revises and renews NOA No. 11-1114.19** and consists of this page 1 and evidence pages E-1 and E-2, as well as approval document mentioned above.

The submitted documentation was reviewed by **Manuel Perez, P. E.**

MIAMI-DADE COUNTY APPROVED

6/5/15

PGT Industries, Inc.

NOTICE OF ACCEPTANCE: EVIDENCE SUBMITTED

A. DRAWINGS

1. Manufacturer's die drawings and sections.
2. Drawing No. **MD-2720.1** titled "Premiervue Fixed Window NOA", sheets 1 through 9 of 9, dated 10/20/13, prepared by manufacturer, signed and sealed by Anthony Lynn Miller, P. E.

B. TESTS

1. Test reports on:1) Uniform Static Air Pressure Test, Loading per FBC TAS 202-94
   2) Large Missile Impact Test per FBC, TAS 201-94
   3) Cyclic Wind Pressure Loading per FBC, TAS 203-94

   along with marked–up drawings and installation diagram of a PVC fixed window, prepared by Fenestration Testing Laboratory, Inc., Test Report No. **FTL-7516**, dated 09/12/13, signed and sealed by Marlin D. Brinson, P.E.
2. Test reports on:1) Air Infiltration Test, per FBC, TAS 202-94
   2) Uniform Static Air Pressure Test, Loading per FBC TAS 202-94
   3) Water Resistance Test, per FBC, TAS 202-94
   4) Large Missile Impact Test per FBC, TAS 201-94
   5) Cyclic Wind Pressure Loading per FBC, TAS 203-94

   along with marked-up drawings and installation diagram of a PVC fixed window, prepared by National Certified Testing Laboratories, Inc., Test Report No. **NCTL-210-3642-1**, **NCTL-210-3642-2**, **NCTL-210-3636-1**, **NCTL-210-3636-2** and **NCTL-210-3635-1**, dated 09/17/09, all signed and sealed by Gerard J. Ferrara, P.E. ***(Submitted under NOA No. 09-1104.02)***

C. CALCULATIONS

1. Anchor verification calculations and structural analysis, complying with **FBC 5th Edition (2014)**, prepared by manufacturer, dated 05/22/15, signed and sealed by Anthony Lynn Miller, P.E.
2. **Glazing complies with ASTM E1300-04/ 09**

D. QUALITY ASSURANCE

1. Miami–Dade Department of Regulatory and Economic Resources (RER).

E. MATERIAL CERTIFICATIONS

1. Notice of Acceptance No. **13-0129.27** issued to **E.I. DuPont DeNemours & Co., Inc.** for their **"DuPont Butacite® PVB Interlayer"** dated 04/11/13, expiring on 12/11/16.

Manuel Perez

Manuel Perez, P.E.
Product Control Examiner
NOA No. 13-1125.04
Expiration Date: August 11, 2020
Approval Date: June 11, 2015

NOTICE OF ACCEPTANCE: EVIDENCE SUBMITTED

E. MATERIAL CERTIFICATIONS (CONTINUED)

2. Notice of Acceptance No. **11-0624.02** issued to **E.I. DuPont DeNemours & Co.**, Inc. for their "**DuPont SentryGlas® Interlayer**" dated 08/25/11, expiring on 01/14/17.
3. Notice of Acceptance No. **12-0420.01** issued to L.B. Plastics, Inc. for their "**Florida Bronze Color Laminated White Rigid PVC Exterior Extrusions**" dated 12/06/12, expiring on 12/30/15.
4. Notice of Acceptance No. **10-1208.02** issued to L.B. Plastics, Inc. for their "**White Rigid PVC Exterior Extrusions**" dated 12/30/10, expiring on 12/30/15.

F. STATEMENTS

1. Statement letter of conformance, complying with **FBC-2010** and with **FBC 5th Edition (2014)**, dated 05/22/15, signed and sealed by Anthony Lynn Miller, P.E.
2. Laboratory compliance letter for Test Reports No. **FTL-7516,** issued by Fenestration Testing Laboratory, dated 09/12/13, signed and sealed by Marlin D. Brinson, P.E.
3. Proposal issued by the Product Control, dated 04/30/13, signed by Jaime D. Gascon, P.E.
4. Letter of *Adoption of as his Own, the Work of another Engineer* per Section 61G15-27.001 of the F.B.P.E., dated 10/07/11 signed and sealed by Anthony Lynn Miller, P.E.
   (Submitted under previous NOA No. 11–1114.19)
5. Statement letter of no financial interest, of independence and of compliance with the **FBC 2010**, dated 10/29/11, signed and sealed by Anthony Lynn Miller, P.E.
   (Submitted under previous NOA No. 11-1114.19)
6. Laboratory addendum letter for Test Reports No. **NCTL-210-3635-1**, **NCTL-210-3634-1** and **NCTL-210-3634-2**, issued by National Certified Testing Laboratories, Inc., dated 04/06/10, signed and sealed by Gerard J. Ferrara, P.E.
   (Submitted under NOA No. 09–1104.02)
7. Laboratory compliance letter for Test Reports No. **NCTL-210-3642-1, NCTL-210-3642-2**, **NCTL-210-3636-1**, **NCTL-210-3636-2** and **NCTL-210-3635-1**, issued by National Certified Testing Laboratories, Inc., dated 09/17/09, signed and sealed by Gerard J. Ferrara, P.E.
   (Submitted under NOA No. 09-1104.02)

G. OTHERS

1. Notice of Acceptance No. **11-1114.19**, issued to PGT Industries, Inc. for their Series "PW's-2720/ 2820 Vinyl" White PVC Fixed Window – L.M.I., approved on 02/16/12 and expiring on 08/11/15.

Manuel Perez, P.E.
Product Control Examiner
NOA No. 13-1125.04
Expiration Date: August 11, 2020
Approval Date: June 11, 2015

GENERAL NOTES: SERIES 2720 PREMIERVUE IMPACT-RESISTANT FIXED WINDOW

DESIGN PRESSURE RATING	IMPACT RATING
VARIES, SEE SHEETS 2-4	RATED FOR LARGE & SMALL MISSILE IMPACT RESISTANCE

1) THIS PRODUCT HAS BEEN DESIGNED & TESTED TO COMPLY WITH THE REQUIREMENTS OF THE FLORIDA BUILDING CODE, INCLUDING THE HIGH VELOCITY HURRICANE ZONE (HVHZ).

2) SHUTTERS ARE NOT REQUIRED WHEN USED IN WIND-BORNE DEBRIS REGIONS. FOR INSULATED GLASS INSTALLATIONS ABOVE 30' IN THE HVHZ, THE OUTBOARD LITE (CAP) MUST TEMPERED.

3) FOR MASONRY APPLICATIONS IN MIAMI-DADE COUNTY, USE ONLY MIAMI-DADE COUNTY APPROVED MASONRY ANCHORS. MATERIALS USED FOR ANCHOR EVALUATIONS WERE SOUTHERN PINE, ASTM C90 CONCRETE MASONRY UNITS WITH MIN. Fc = 1.9 KSI AND CONCRETE WITH MIN. KSI SPECIFIC PER ANCHOR TYPE ON TABLE 8 .

4) ALL WOOD BUCKS LESS THAN 1-1/2" THICK ARE TO BE CONSIDERED 1X INSTALLATIONS. 1X WOOD BUCKS ARE OPTIONAL IF UNIT IS INSTALLED DIRECTLY TO SUBSTRATE. WOOD BUCKS DEPICTED AS 2X ARE 1-1/2" THICK OR GREATER. 1X AND 2X BUCKS (WHEN USED) SHALL BE DESIGNED AND SECURED TO PROPERLY TRANSFER LOADS TO THE STRUCTURE PER THE CURRENT FBC. WOOD BUCK DESIGN AND INSTALLATION IS THE RESPONSIBILITY OF THE ENGINEER, (EOR) OR ARCHITECT OF RECORD, (AOR).

5) ANCHOR EMBEDMENT TO BASE MATERIAL SHALL BE BEYOND WALL DRESSING OR STUCCO. USE ANCHORS OF SUFFICIENT EMBEDMENT. NARROW JOINT SEALANT IS USED ON ALL FOUR CORNERS OF THE FRAME. INSTALLATION ANCHORS SHOULD BE SEALED. OVERALL SEALING/FLASHING STRATEGY FOR WATER RESISTANCE OF INSTALLATION SHALL BE DONE BY OTHERS AND IS BEYOND THE SCOPE OF THESE INSTRUCTIONS.

6) MAX. 1/4" SHIMS ARE REQUIRED AT EACH ANCHOR LOCATION WHERE THE PRODUCT IS NOT FLUSH TO THE SUBSTRATE. USE SHIMS CAPABLE OF TRANSFERRING APPLIED LOADS. WOOD BUCKS, BY OTHERS, MUST BE SUFFICIENTLY ANCHORED TO RESIST LOADS IMPOSED ON THEM BY THE WINDOW.

7) DESIGN PRESSURES:
A. NEGATIVE DESIGN LOADS BASED ON STRUCTURAL/CYCLE TEST PRESSURE, FRAME ANALYSIS AND GLASS PER ASTM E1300.
B. POSITIVE DESIGN LOADS BASED ON WATER TEST PRESSURE, STRUCTURAL/ CYCLE TEST PRESSURE, FRAME ANALYSIS AND GLASS PER ASTM E1300.

8) THE ANCHORAGE METHODS SHOWN HAVE BEEN DESIGNED TO RESIST THE WINDLOADS CORRESPONDING TO THE REQUIRED DESIGN PRESSURE. THE 33-1/3% STRESS INCREASE HAS NOT BEEN USED IN THE DESIGN OF THIS PRODUCT. THE 1.6 LOAD DURATION FACTOR WAS USED FOR THE EVALUATION OF ANCHORS INTO WOOD. ANCHORS THAT COME INTO CONTACT WITH OTHER DISSIMILAR MATERIALS SHALL MEET THE REQUIREMENTS OF THE FLORIDA BUILDING CODE FOR CORROSION RESISTANCE.

9) REFERENCES:
TEST REPORTS: NCTL 210-3635-1, NCTL 210-3636-1&2, NCTL 210-3642-1&2, FTL-7516;
ELCO ULTRACON & CRETEFLEX NOA'S; L.B. PLASTICS, INC NOA'S FOR FLORIDA-BRONZE LAMINATED & WHITE RIGID PVC, ANSI/AF&PA NDS FOR WOOD CONSTRUCTION AND ADM, ALUMINUM DESIGN MANUAL.

10) THE 2720 SERIES USES A EITHER A PVB OR SG INTERLAYER. UNITS GLAZED WITH GLASS CONTAINING AN SG INTERLAYER WERE PREVIOUSLY KNOWN AS THE 2820 SERIES.

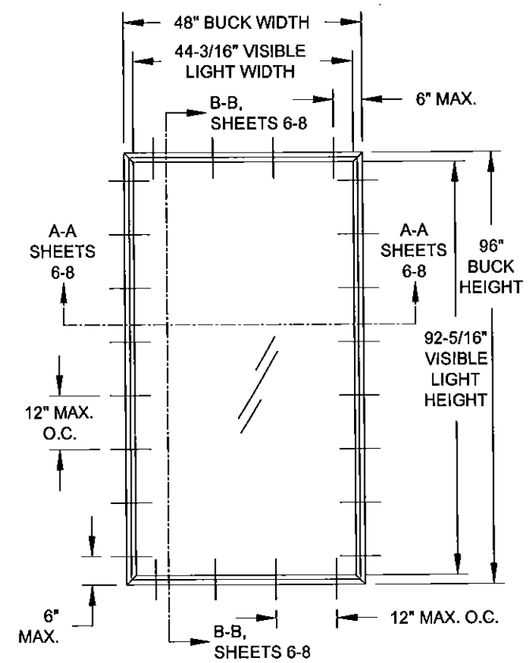

TYP. ELEVATION

FIGURE 1:

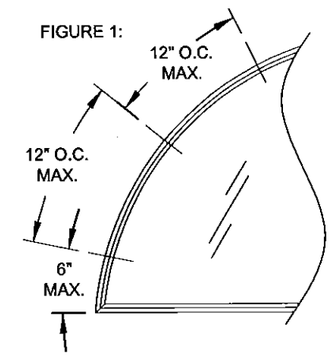

TYP. CURVED/ANGLED ELEVATION

SHAPES AS SHOWN BELOW OR SIMILAR, MAY BE USED BY INSCRIBING THE SHAPE IN A BLOCK AND OBTAINING DESIGN PRESSURES FOR THAT BLOCK SIZE FROM THE TABLES ON SHEETS 2-4. ANCHOR SPACING TO BE 6" MAX. FROM CORNERS AND 12" O.C. MAX. FOR ALL FRAME MEMBERS.

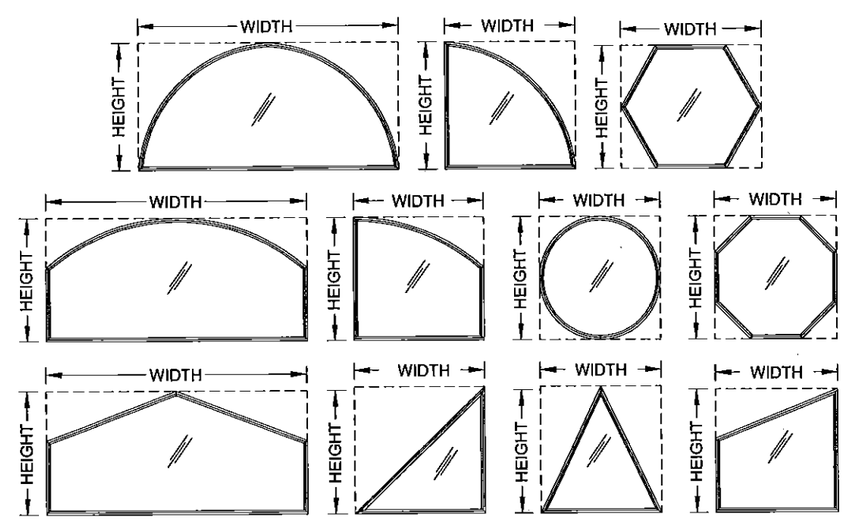

TABLE 1:

Glass Type #	Glass Description	DP Sheet #
A	1-1/16" Lami. IG (3/16" A - .090" SG - 3/16" A - 7/16" Air - 3/16" T)	2
B	7/16" Lami. (3/16" HS - .090" PVB - 3/16" HS)	3
C	1-1/16" Lami. IG (3/16" HS - .090" PVB - 3/16" HS - 7/16" Air - 3/16" T)	3
D	7/16" Lami. (3/16" HS - .090" SG - 3/16" HS)	4-5
E	1-1/16" Lami. IG (3/16" HS - .090" SG - 3/16" HS - 7/16" Air - 3/16" T)	4-5

"SG" = "DUPONT ®SENTRYGLAS INTERLAYER" BY E.I. DUPONT DENEMOURS & CO., INC.

GUIDE TO SHEETS:

GENERAL NOTES..... 1
ELEVATIONS..... 1
DESIGN PRESSURES..... 2-4
GLAZING DETAILS..... 5
INSTALLATION ANCHORS..... 6-8
INSTALLATION, FLANGE..... 6
INSTALLATION, EQUAL-LEG..... 7
INSTALLATION, ADD-ON FIN..... 8
CORNER ASSEMBLY..... 9
EXTRUSION PROFILES..... 9
PARTS LIST..... 9

GLAZING NOTES:
"A" = ANNEALED
"HS" = HEAT STRENGTHENED
"T" = TEMPERED
"PVB" = DUPONT .090" BUTACITE PVB
"SG" = DUPONT .090" SENTRYGLAS

PRODUCT REVISED
as complying with the Florida Building Code
Acceptance No. 13-1125.04
Expiration Date 08/14/2020
By Wanuel Perez
Miami-Dade Product Control

Rev.	Date	Drawn By	DWG No.	Sheet	Scale	Series	Desc.	Title
Rev 1								
Rev 2								
Rev 3								
	10/20/13	J ROSOWSKI	MD-2720.1	1 OF 9	NTS	PW-2720	GENERAL NOTES & ELEVATION	PREMIERVUE FIXED WINDOW NOA

1070 TECHNOLOGY DRIVE
N. VENICE, FL 34275
P.O. BOX 1529
NOKOMIS, FL 34274
(941)-480-1600
CERT. OF AUTH. #29296

ANTHONY LYNN MILLER
LICENSE
No. 58705
5/22/15
STATE OF FLORIDA
PROFESSIONAL ENGINEER
A. LYNN MILLER, P.E.
P.E.# 58705

GLASS TYPE A (1-1/16" Lami. IG)
3/16" A - .090" SG - 3/16" A - 7/16" Air - 3/16" T

TABLE 2:

Glass Type A		Window Design Pressure (+/- psf)										
		Long Side (in)										
		67.875	72	76	80	84	88	92	96	100	104	109-7/8
Short Side (in)	30	+100/-120	+100/-120	+100/-120	+100/-120	+100/-120	+100/-120	+100/-120	+100/-120	+100/-120	+100/-120	+100/-120
	32	+100/-120	+100/-120	+100/-120	+100/-120	+100/-120	+100/-120	+100/-120	+100/-120	+100/-120	+100/-120	+100/-120
	34	+100/-120	+100/-120	+100/-120	+100/-120	+100/-120	+100/-120	+100/-120	+100/-120	+100/-120	+100/-120	+100/-120
	36	+100/-120	+100/-120	+100/-120	+100/-120	+100/-120	+100/-120	+100/-120	+100/-120	+100/-120	+100/-120	+100/-120
	38	+100/-120	+100/-120	+100/-120	+100/-120	+100/-120	+100/-120	+100/-117.2	+100/-115	+100/-112.6	+100/-110.7	+100/-108.5
	40	+100/-120	+100/-120	+100/-120	+100/-118.4	+100/-115.1	+100/-112.3	+100/-109.2	+100/-106	+100/-103.6	+100/-101.7	+/-99.4
	42	+100/-120	+100/-120	+100/-117.4	+100/-112.8	+100/-109.2	+100/-105.8	+100/-102.4	+/-98.8	+/-95.2	+/-93.2	
	44	+100/-120	+100/-117.4	+100/-112.9	+100/-108.7	+100/-104.3	+100/-100.3	+/-96.5	+/-93.3	+/-91.1	+/-88.9	
	46	+100/-119.8	+100/-114	+100/-109.4	+100/-104.8	+100/-100.2	+/-95.7	+/-92.4	+/-90.1	+/-87.7		
	48	+100/-115.4	+100/-110.8	+100/-106.1	+100/-101.3	+/-96.6	+/-92.7	+/-89.6	+/-86.9			
	50	+100/-112.2	+100/-107.6	+100/-103	+/-98.1	+/-93.6	+/-90.2	+/-87.1				
	52	+100/-109	+100/-104.2	+/-100	+/-95.1	+/-91.3	+/-87.8					
	54	+100/-105.9	+100/-100.9	+/-96.5	+/-92.9	+/-89.2						
	56	+100/-102.8	+/-97.6	+/-93.4	+/-90.2							
	58	+/-99.9	+/-94.5	+/-91								
	60	+/-97	+/-92.2	+/-88.6								
	62	+/-94.2	+/-90.1									
	64	+/-92.2	+/-87.9									
	66	+/-90.3										
	67-7/8	+/-88.6										

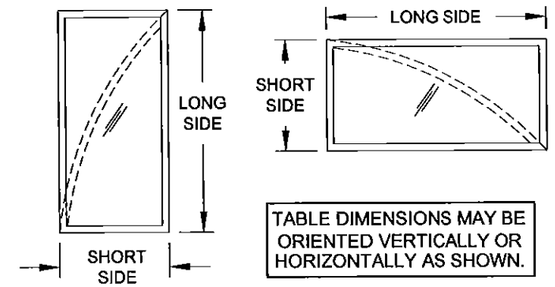

TABLE DIMENSIONS MAY BE ORIENTED VERTICALLY OR HORIZONTALLY AS SHOWN.

TABLE 3:

Glass Type A		Maximum Allowable Anchor O.C. Spacing (in)																																															
		Long Side (in)																																															
		67-7/8				72				76				80				84				88				92				96				100				104				109.875			
	Anchor Type →	A	B	C	D	A	B	C	D	A	B	C	D	A	B	C	D	A	B	C	D	A	B	C	D	A	B	C	D	A	B	C	D	A	B	C	D	A	B	C	D	A	B	C	D
Short Side (in)	30 Short Side	12	12	12	12	12	12	12	12	12	12	12	12	12	12	12	12	12	12	12	12	12	12	12	12	12	12	12	12	12	12	12	12	12	12	12	12	12	12	12	12	12	12	12	12
	30 Long Side	10.6	12	12	12	10.4	12	12	12	10.2	12	12	12	10.1	12	12	12	10.0	11.9	12	12	9.9	11.8	12	12	9.8	11.7	12	12	9.7	11.6	12	12	9.7	11.5	12	12	9.6	11.4	12	12	9.5	11.3	12	12
	32 Short Side	12	12	12	12	12	12	12	12	12	12	12	12	12	12	12	12	12	12	12	12	12	12	12	12	12	12	12	12	12	12	12	12	12	12	12	12	12	12	12	12	12	12	12	12
	32 Long Side	10.0	12	12	12	9.8	11.8	12	12	9.7	11.6	12	12	9.5	11.4	12	12	9.4	11.2	12	12	9.3	11.1	12	12	9.2	11.0	12	12	9.2	10.9	12	12	9.1	10.8	12	12	9.0	10.7	12.0	12	9.0	10.6	11.8	12
	34 Short Side	12	12	12	12	12	12	12	12	12	12	12	12	12	12	12	12	12	12	12	12	12	12	12	12	12	12	12	12	12	12	12	12	12	12	12	12	12	12	12	12	12	12	12	12
	34 Long Side	9.5	11.4	12	12	9.3	11.2	12	12	9.2	11.0	12	12	9.1	10.8	12	12	9.0	10.7	11.9	12	8.9	10.5	11.8	12	8.8	10.4	11.6	12	8.7	10.3	11.5	12	8.6	10.2	11.4	12	8.6	10.1	11.3	12	8.5	10.0	11.2	12
	36 Short Side	12	12	12	12	12	12	12	12	12	12	12	12	12	12	12	12	12	12	12	12	12	12	12	12	12	12	12	12	12	12	12	12	12	12	12	12	12	12	12	12	12	12	12	12
	36 Long Side	9.1	10.9	12	12	8.9	10.7	12	12	8.8	10.5	11.8	12	8.7	10.3	11.5	12	8.5	10.2	11.4	12	8.4	10.0	11.2	12	8.4	9.9	11.1	12	8.3	9.8	11.0	12	8.2	9.7	10.8	12	8.2	9.6	10.8	12	8.1	9.5	10.6	12
	38 Short Side	12	12	12	12	12	12	12	12	12	12	12	12	12	12	12	12	12	12	12	12	12	12	12	12	12	12	12	12	12	12	12	12	12	12	12	12	12	12	12	12	12	12	12	12
	38 Long Side	8.8	10.5	11.8	12	8.6	10.2	11.5	12	8.4	10.0	11.3	12	8.3	9.9	11.0	12	8.2	9.7	10.9	12	8.1	9.6	10.7	12	8.2	9.7	10.9	12	8.3	9.8	11.0	12	8.4	10.0	11.1	12	8.5	10.1	11.2	12	8.6	10.2	11.3	12
	40 Short Side	12	12	12	12	12	12	12	12	12	12	12	12	12	12	12	12	12	12	12	12	12	12	12	12	12	12	12	12	12	12	12	12	12	12	12	12	12	12	12	12	12	12	12	12
	40 Long Side	8.5	10.1	11.4	12	8.3	9.9	11.1	12	8.1	9.7	10.8	12	8.1	9.6	10.8	12	8.2	9.8	10.9	12	8.4	9.9	11.1	12	8.5	10.1	11.3	12	8.7	10.3	11.5	12	8.8	10.5	11.7	12	8.9	10.6	11.8	12	9.0	10.7	11.9	12
	42 Short Side	12	12	12	12	12	12	12	12	12	12	12	12	12	12	12	12	12	12	12	12	12	12	12	12	12	12	12	12	12	12	12	12	12	12	12	12	12	12	12	12				
	42 Long Side	8.2	9.8	11.0	12	8.0	9.5	10.7	12	8.0	9.6	10.7	12	8.2	9.8	11.0	12	8.4	10.0	11.2	12	8.6	10.2	11.4	12	8.8	10.4	11.7	12	9.0	10.7	12.0	12	9.3	11.1	12	12	9.4	11.2	12	12				
	44 Short Side	11.3	12	12	12	11.6	12	12	12	12	12	12	12	12	12	12	12	12	12	12	12	12	12	12	12	12	12	12	12	12	12	12	12	12	12	12	12	12	12	12	12				
	44 Long Side	8.0	9.5	10.7	12	8.0	9.5	10.6	12	8.1	9.7	10.8	12	8.3	9.9	11.1	12	8.6	10.2	11.4	12	8.8	10.5	11.7	12	9.1	10.8	12	12	9.3	11.0	12	12	9.4	11.2	12	12	9.6	11.4	12	12				
	46 Short Side	10.7	12	12	12	11.4	12	12	12	12	12	12	12	12	12	12	12	12	12	12	12	12	12	12	12	12	12	12	12	12	12	12	12	12	12	12	12								
	46 Long Side	7.8	9.3	10.4	12	8.0	9.5	10.7	12	8.2	9.7	10.9	12	8.4	10.0	11.2	12	8.7	10.3	11.6	12	9.0	10.7	12.0	12	9.2	10.9	12	12	9.3	11.1	12	12	9.5	11.3	12	12								
	48 Short Side	10.6	12	12	12	11.2	12	12	12	11.8	12	12	12	12	12	12	12	12	12	12	12	12	12	12	12	12	12	12	12	12	12	12	12												
	48 Long Side	7.9	9.5	10.6	12	8.1	9.6	10.8	12	8.3	9.8	11.0	12	8.5	10.1	11.3	12	8.8	10.4	11.7	12	9.0	10.7	12	12	9.2	11.0	12	12	9.4	11.2	12	12												
	50 Short Side	10.4	12	12	12	11.0	12	12	12	11.7	12	12	12	12	12	12	12	12	12	12	12	12	12	12	12	12	12	12	12																
	50 Long Side	8.0	9.6	10.8	12	8.2	9.7	10.9	12	8.3	9.9	11.1	12	8.6	10.2	11.5	12	8.9	10.5	11.8	12	9.1	10.8	12	12	9.2	11.0	12	12																
	52 Short Side	10.3	12	12	12	10.9	12	12	12	11.5	12	12	12	12	12	12	12	12	12	12	12	12	12	12	12																				
	52 Long Side	8.2	9.7	10.9	12	8.3	9.9	11.1	12	8.4	10.0	11.3	12	8.7	10.3	11.6	12	8.9	10.6	11.8	12	9.1	10.8	12	12																				
	54 Short Side	10.2	12	12	12	10.9	12	12	12	11.5	12	12	12	12	12	12	12	12	12	12	12																								
	54 Long Side	8.3	9.9	11.1	12	8.4	10.1	11.3	12	8.6	10.3	11.5	12	8.7	10.4	11.6	12	8.9	10.6	11.9	12																								
	56 Short Side	10.2	12	12	12	10.8	12	12	12	11.4	12	12	12	12.0	12	12	12																												
	56 Long Side	12	10.1	11.4	12	8.6	10.3	11.6	12	8.8	10.5	11.7	12	8.8	10.5	11.8	12																												
	58 Short Side	10.1	12	12	12	10.8	12	12	12	11.3	12	12	12																																
	58 Long Side	8.7	10.4	11.7	12	8.8	10.6	11.9	12	8.9	10.6	11.9	12																																
	60 Short Side	10.1	12	12	12	10.7	12	12	12	11.2	12	12	12																																
	60 Long Side	8.9	10.6	12.0	12	9.0	10.7	12	12	9.0	10.8	12	12																																
	62 Short Side	10.0	12	12	12	10.6	12	12	12																																				
	62 Long Side	9.1	10.9	12	12	9.1	10.9	12	12																																				
	64 Short Side	9.9	11.9	12	12	10.5	12	12	12																																				
	64 Long Side	9.3	11.2	12	12	9.3	11.1	12	12																																				
	66 Short Side	9.8	11.8	12	12																																								
	66 Long Side	9.5	11.4	12	12																																								
	67-7/8 Short Side	9.7	11.7	12	12																																								
	67-7/8 Long Side	9.7	11.7	12	12																																								

NOTES:

1) BUCK DIMENSIONS SHOWN.

2) FOR SIZES NOT SHOWN, ROUND UP TO THE NEXT AVAILABLE SHORT OR LONG DIMENSION.

3) FOR ARCHITECTURAL WINDOWS, FIND THE SMALLEST WINDOW SIZE IN THE TABLE ABOVE WHICH THE OVERALL DIMENSIONS COMPLETELY FIT WITHIN.

PRODUCT REVISED
as complying with the Florida Building Code
Acceptance No. 13-1125.04
Expiration Date 08/11/2020
By Manuel Sera
Miami-Dade Product Control

Rev 1	
Rev 2	
Rev 3	

1070 TECHNOLOGY DRIVE
N. VENICE, FL 34275
P.O. BOX 1529
NOKOMIS, FL 34274
(941)-480-1600
CERT. OF AUTH. #29296

Series	Desc.	Title	Scale	Sheet	DWG No.	Drawn By	Date	Rev.
PW-2720	DP AND ANCHOR OC, B	PREMIERVUE FIXED WINDOW NOA	NTS	2 OF 9	MD-2720.1	J ROSOWSKI	10/20/13	

ANTHONY LYNN MILLER
LICENSE
No. 58705
STATE OF FLORIDA
PROFESSIONAL ENGINEER

A. LYNN MILLER, P.E.
P.E.# 58705

TABLE 4:

Glass Types B & C		Window Design Pressure (+/- psf)																			
		Long Side (in)																			
		67-7/8	72	76	80	84	88	92	96	100	104	109-7/8	112	116	120	124	128	132	140	144	144-7/8
Short Side (in)	30	+65/-80	+65/-80	+65/-80	+65/-80	+65/-80	+65/-80	+65/-80	+65/-80	+65/-80	+65/-80	+65/-80	+65/-80	+65/-80	+65/-80	+65/-80	+65/-80	+65/-80	+65/-80	+65/-80	+65/-80
	32	+65/-80	+65/-80	+65/-80	+65/-80	+65/-80	+65/-80	+65/-80	+65/-80	+65/-80	+65/-80	+65/-80	+65/-80	+65/-80	+65/-80	+65/-80	+65/-80	+65/-80	+65/-80	+65/-80	
	34	+65/-80	+65/-80	+65/-80	+65/-80	+65/-80	+65/-80	+65/-80	+65/-80	+65/-80	+65/-80	+65/-80	+65/-80	+65/-80	+65/-80	+65/-80	+65/-80	+65/-80			
	36	+65/-80	+65/-80	+65/-80	+65/-80	+65/-80	+65/-80	+65/-80	+65/-80	+65/-80	+65/-80	+65/-80	+65/-80	+65/-80	+65/-80	+65/-80	+65/-80				
	38	+65/-80	+65/-80	+65/-80	+65/-80	+65/-80	+65/-80	+65/-80	+65/-80	+65/-80	+65/-80	+65/-80	+65/-80	+65/-80	+65/-80						
	40	+65/-80	+65/-80	+65/-80	+65/-80	+65/-80	+65/-80	+65/-80	+65/-80	+65/-80	+65/-80	+65/-80	+65/-80								
	42	+65/-80	+65/-80	+65/-80	+65/-80	+65/-80	+65/-80	+65/-80	+65/-80	+65/-80	+65/-80	+65/-80									
	44	+65/-80	+65/-80	+65/-80	+65/-80	+65/-80	+65/-80	+65/-80	+65/-80	+65/-80	+65/-80										
	46	+65/-80	+65/-80	+65/-80	+65/-80	+65/-80	+65/-80	+65/-80	+65/-80	+65/-80											
	48	+65/-80	+65/-80	+65/-80	+65/-80	+65/-80	+65/-80	+65/-80	+65/-80												
	50	+65/-80	+65/-80	+65/-80	+65/-80	+65/-80	+65/-80	+64.5/-79.4													
	52	+65/-80	+65/-80	+65/-80	+65/-80	+65/-80	+64.1/-78.9														
	54	+65/-80	+65/-80	+65/-80	+65/-80	+64.1/-78.9															
	56	+65/-80	+65/-80	+65/-80	+64.5/-79.4																
	58	+65/-80	+65/-80	+65/-80																	
	60	+65/-80	+65/-80	+64.7/-79.6																	
	62	+65/-80	+65/-80																		
	64	+65/-80	+65/-80																		
	66	+65/-80																			
	67-7/8	+65/-80																			

GLASS TYPE B (7/16" Lami.)
3/16" HS - .090" PVB - 3/16" HS

GLASS TYPE C (1-1/16" Lami. IG)
3/16" HS - .090" PVB - 3/16" HS - 7/16" Air - 3/16" T

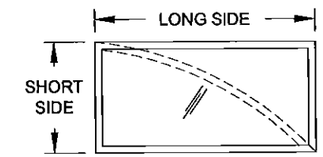

TABLE DIMENSIONS MAY BE ORIENTED VERTICALLY OR HORIZONTALLY AS SHOWN.

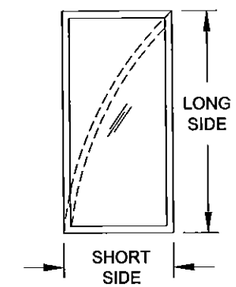

TABLE 5:

Glass Types B & C		Maximum Allowable Anchor O.C. Spacing (in)																																									
		Long Side (in)																																									
		67-7/8		72		76		80		84		88		92		96		100		104		109-7/8		112		116		120		124		128		132		140		144		144-7/8	
	Anchor Type →	A	B,C & D	A	B,C & D	A	B,C & D	A	B,C & D	A	B,C & D	A	B,C & D	A	B,C & D	A	B,C & D	A	B,C & D	A	B,C & D	A	B,C & D	A	B,C & D	A	B,C & D	A	B,C & D	A	B,C & D	A	B,C & D	A	B,C & D	A	B,C & D	A	B,C & D	A	B,C & D
Short Side (in)	30 Short Side	12	12	12	12	12	12	12	12	12	12	12	12	12	12	12	12	12	12	12	12	12	12	12	12	12	12	12	12	12	12	12	12	12	12	12	12	12	12	12	12	12	12
	30 Long Side	12	12	12	12	12	12	12	12	12	12	12	12	12	12	12	12	12	12	12	12	12	12	12	12	12	12	12	12	12	12	12	12	12	12	12	12	12	12	12	12		
	32 Short Side	12	12	12	12	12	12	12	12	12	12	12	12	12	12	12	12	12	12	12	12	12	12	12	12	12	12	12	12	12	12	12	12	12	12	12	12	12	12				
	32 Long Side	12	12	12	12	12	12	12	12	12	12	12	12	12	12	12	12	12	12	12	12	12	12	12	12	12	12	12	12	12	12	12	12	12	12	12	12						
	34 Short Side	12	12	12	12	12	12	12	12	12	12	12	12	12	12	12	12	12	12	12	12	12	12	12	12	12	12	12	12	12	12	12	12	12	12								
	34 Long Side	12	12	12	12	12	12	12	12	12	12	12	12	12	12	12	12	12	12	12	12	12	12	12	12	12	12	12	12	12	12	12	12										
	36 Short Side	12	12	12	12	12	12	12	12	12	12	12	12	12	12	12	12	12	12	12	12	12	12	12	12	12	12	12	12	12	12	12	12										
	36 Long Side	12	12	12	12	12	12	12	12	12	12	12	12	12	12	12	12	12	12	12	12	12	12	12	12	12	12	12	12	12	12	12	12										
	38 Short Side	12	12	12	12	12	12	12	12	12	12	12	12	12	12	12	12	12	12	12	12	12	12	12	12	12	12	12	12														
	38 Long Side	12	12	12	12	12	12	12	12	12	12	12	12	12	12	12	12	12	12	12	12	12	12	12	12	11.9	12	11.8	12														
	40 Short Side	12	12	12	12	12	12	12	12	12	12	12	12	12	12	12	12	12	12	12	12	12	12	12	12																		
	40 Long Side	12	12	12	12	12	12	12	12	12	12	12	12	12	12	11.9	12	11.8	12	11.7	12	11.5	12	11.4	12																		
	42 Short Side	12	12	12	12	12	12	12	12	12	12	12	12	12	12	12	12	12	12	12	12	12	12																				
	42 Long Side	12	12	12	12	12	12	12	12	12	12	11.8	12	11.6	12	11.5	12	11.3	12	11.2	12	11.0	12																				
	44 Short Side	12	12	12	12	12	12	12	12	12	12	12	12	12	12	12	12	12	12	12	12																						
	44 Long Side	12	12	12	12	12	12	11.8	12	11.6	12	11.4	12	11.2	12	11.0	12	10.9	12	10.8	12																						
	46 Short Side	12	12	12	12	12	12	12	12	12	12	12	12	12	12	12	12	12	12																								
	46 Long Side	12	12	12	12	11.7	12	11.5	12	11.2	12	11.0	12	10.8	12	10.7	12	10.5	12																								
	48 Short Side	12	12	12	12	12	12	12	12	12	12	12	12	12	12	12	12																										
	48 Long Side	12	12	11.8	12	11.4	12	11.1	12	10.9	12	10.7	12	10.5	12	10.3	12																										
	50 Short Side	12	12	12	12	12	12	12	12	12	12	12	12	12	12																												
	50 Long Side	12	12	11.5	12	11.1	12	10.8	12	10.6	12	10.4	12	10.3	12																												
	52 Short Side	12	12	12	12	12	12	12	12	12	12	12	12																														
	52 Long Side	11.7	12	11.3	12	10.9	12	10.6	12	10.3	12	10.3	12																														
	54 Short Side	12	12	12	12	12	12	12	12	12	12																																
	54 Long Side	11.5	12	11.1	12	10.7	12	10.3	12	10.2	12																																
	56 Short Side	12	12	12	12	12	12	12	12																																		
	56 Long Side	12	12	10.9	12	10.5	12	10.2	12																																		
	58 Short Side	12	12	12	12	12	12																																				
	58 Long Side	11.3	12	10.7	12	10.3	12																																				
	60 Short Side	12	12	12	12	12	12																																				
	60 Long Side	11.1	12	10.6	12	10.2	12																																				
	62 Short Side	12	12	12	12																																						
	62 Long Side	11.1	12	10.5	12																																						
	64 Short Side	11.8	12	11.8	12																																						
	64 Long Side	11	12	10.4	12																																						
	66 Short Side	11.3	12																																								
	66 Long Side	11	12																																								
	67-7/8 Short Side	11	12																																								
	67-7/8 Long Side	11	12																																								

NOTES:

1) BUCK DIMENSIONS SHOWN.

2) FOR SIZES NOT SHOWN, ROUND UP TO THE NEXT AVAILABLE SHORT OR LONG DIMENSION.

3) FOR ARCHITECTURAL WINDOWS, FIND THE SMALLEST WINDOW SIZE IN THE TABLE ABOVE WHICH THE OVERALL DIMENSIONS COMPLETELY FIT WITHIN.

PRODUCT REVISED
as complying with the Florida Building Code
Acceptance No. 13-1125.04
Expiration Date 08/14/2020
By Manuel Diaz
Miami Dade Product Control

Rev 1	
Rev 2	
Rev 3	

1070 TECHNOLOGY DRIVE
N. VENICE, FL 34275
P.O. BOX 1529
NOKOMIS, FL 34274
(941)-480-1600
CERT. OF AUTH. #29296

Rev.	MD-2720.1
Drawn By	J ROSOWSKI
Date	10/20/13
DWG No	9
Sheet	3 OF 9
Scale	NTS
Series	PW-2720
Desc.	DP AND ANCHOR OC, A
Title	PREMIERVUE FIXED WINDOW NOA

ANTHONY LYNN MILLER
LICENSE
No. 58705
STATE OF FLORIDA
PROFESSIONAL ENGINEER
5/22/15

A. LYNN MILLER, P.E.
P.E.# 58705

TABLE 6:

Glass Type D & E	Window Design Pressure (+/- psf)																			
	Long Side (in)																			
Short Side (in)	67-7/8	72	76	80	84	88	92	96	100	104	109-7/8	112	116	120	124	128	132	140	144	144-7/8
30	+/-150	+/-150	+/-150	+/-150	+/-150	+/-150	+/-150	+/-150	+/-150	+/-150	+/-150	+/-150	+/-150	+/-150	+/-150	+/-150	+/-150	+100/-120	+100/-120	+100/-120
32	+/-150	+/-150	+/-150	+/-150	+/-150	+/-150	+/-150	+/-150	+/-150	+/-150	+/-150	+/-150	+/-150	+/-150	+/-150	+/-150	+100/-120	+100/-120	+100/-120	
34	+/-150	+/-150	+/-150	+/-150	+/-150	+/-150	+/-150	+/-150	+/-148.8	+/-147.6	+/-146.1	+/-145.6	+/-144.7	+/-143.9	+100/-120	+100/-120	+100/-120			
36	+/-150	+/-150	+/-150	+/-150	+/-148.5	+/-146.6	+/-145	+/-143.6	+/-142.3	+/-141.1	+/-139.5	+/-139	+100/-120	+100/-120	+100/-120	+100/-120				
38	+/-150	+/-150	+/-147.3	+/-144.9	+/-142.8	+/-140.9	+/-139.3	+/-137.8	+/-136.4	+/-135.2	+100/-120	+100/-120	+100/-120	+100/-120						
40	+/-148.8	+/-145.4	+/-142.5	+/-140	+/-137.8	+/-135.9	+/-134.1	+/-132.6	+/-131.2	+100/-120	+100/-120	+100/-120								
42	+/-144.8	+/-141.2	+/-138.2	+/-135.6	+/-133.3	+/-131.3	+/-129.6	+/-128	+100/-120	+100/-120	+100/-120									
44	+/-141.2	+/-137.4	+/-134.3	+/-131.6	+/-129.3	+/-127.2	+/-125.4	+100/-120	+98.9/-118.7	+97.8/-117.4										
46	+/-138.1	+/-134.1	+/-130.9	+/-128.1	+/-125.7	+/-123.6	+98.4/-118.1	+97/-116.4	+95.8/-115											
48	+/-135.3	+/-131.2	+/-127.9	+/-125	+/-122.5	+97.2/-116.7	+95.7/-114.8	+94.3/-113.1												
50	+/-133	+/-128.7	+/-125.2	+/-122.2	+96.6/-116	+94.8/-113.8	+93.2/-111.9													
52	+/-130.9	+/-126.4	+/-122.7	+96.7/-116	+94.5/-113.4	+92.6/-111.2														
54	+/-129.1	+/-124.4	+/-120.6	+94.9/-113.8	+92.6/-111.1															
56	+/-127.6	+/-122.7	+96/-115.2	+93.2/-111.9																
58	+/-126.4	+98/-117.6	+94.6/-113.5																	
60	+/-125.4	+97/-116.4	+93.5/-112.1																	
62	+100/-120	+96.1/-115.4																		
64	+100/-120	+95.5/-114.5																		
66	+100/-120																			
67-7/8	+100/-120																			

GLASS TYPE D (7/16" Lami.)
7/16" Lami. (3/16" HS - .090" SG - 3/16" HS

GLASS TYPE E (1-1/16" Lami. IG)
3/16" HS - .090" SG - 3/16" HS - 7/16" Air - 3/16" T

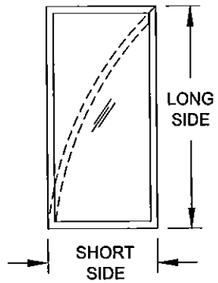

TABLE 7: *(continues on next sheet)*

Glass Type D & E		Maximum Allowable Anchor O.C. Spacing (in)																																							
		Long Side (in)																																							
		67-7/8				72				76				80				84				88				92				96				100				104			
Anchor Type →		A	B	C	D	A	B	C	D	A	B	C	D	A	B	C	D	A	B	C	D	A	B	C	D	A	B	C	D	A	B	C	D	A	B	C	D	A	B	C	D
Short Side (in)																																									
30	Short Side	12	12	12	12	12	12	12	12	12	12	12	12	12	12	12	12	12	12	12	12	12	12	12	12	12	12	12	12	12	12	12	12	12	12	12	12	12	12	12	12
	Long Side	8.1	9.7	10.9	12	8	9.6	10.7	12	7.9	9.4	10.6	12	7.8	9.3	10.4	12	7.8	9.2	10.3	12	7.7	9.1	10.2	12	7.6	9.1	10.1	12	7.6	9	10.0	12	7.6	8.9	10.0	12	7.5	8.9	9.9	12
32	Short Side	12	12	12	12	12	12	12	12	12	12	12	12	12	12	12	12	12	12	12	12	12	12	12	12	12	12	12	12	12	12	12	12	12	12	12	12	12	12	12	12
	Long Side	7.7	9.2	10.3	12	7.6	9.1	10.1	12	7.5	8.9	10.0	12	7.4	8.8	9.9	12	7.4	8.7	9.7	12	7.3	8.6	9.6	12	7.2	8.6	9.5	12	7.2	8.5	9.5	12	7.1	8.4	9.4	12	7.1	8.4	9.3	12
34	Short Side	11.8	12	12	12	11.8	12	12	12	11.8	12	12	12	11.8	12	12	12	11.8	12	12	12	11.8	12	12	12	11.8	12	12	12	11.8	12	12	12	11.9	12	12	12	12	12	12	12
	Long Side	7.4	8.8	9.8	12	7.3	8.6	9.7	12	7.2	8.5	9.5	12	7.1	8.4	9.4	12	7.0	8.3	9.2	12	6.9	8.2	9.1	12	6.9	8.1	9.1	12	6.8	8.1	9	12	6.8	8.1	9	12	6.8	8.1	9	12
36	Short Side	10.8	12	12	12	10.8	12	12	12	10.8	12	12	12	10.8	12	12	12	11.0	12	12	12	11.2	12	12	12	11.4	12	12	12	11.6	12	12	12	11.7	12	12	12	11.9	12	12	12
	Long Side	7.1	8.4	9.4	12	6.9	8.3	9.2	12	6.8	8.1	9.1	12	6.8	8	8.9	12	6.7	8	8.9	12	6.8	8	8.9	12	6.8	8	9	12	6.8	8	9	12	6.8	8.1	9	12	6.8	8.1	9	12
38	Short Side	10.1	12	12	12	10.1	12	12	12	10.3	12	12	12	10.6	12	12	12	10.8	12	12	12	11.0	12	12	12	11.2	12	12	12	11.4	12	12	12	11.5	12	12	12	11.7	12	12	12
	Long Side	6.8	8.1	9.1	12	6.7	7.9	8.9	12	6.7	7.9	8.9	12	6.7	8	8.9	12	6.8	8	8.9	12	6.8	8	8.9	12	6.8	8	8.9	12	6.8	8	9	12	6.8	8.1	9	12	6.8	8.1	9	12
40	Short Side	9.5	11.8	12	12	9.8	12	12	12	10.1	12	12	12	10.4	12	12	12	10.6	12	12	12	10.8	12	12	12	11.0	12	12	12	11.2	12	12	12	11.3	12	12	12	12	12	12	12
	Long Side	6.6	7.9	8.8	12	6.7	7.9	8.9	12	6.7	7.9	8.9	12	6.7	8	8.9	12	6.8	8	8.9	12	6.8	8	8.9	12	6.8	8	9	12	6.8	8	9	12	6.8	8.1	9	12	7.5	8.8	9.8	12
42	Short Side	9.3	11.4	12	12	9.6	11.8	12	12	9.9	12	12	12	10.2	12	12	12	10.4	12	12	12	10.6	12	12	12	10.8	12	12	12	11.0	12	12	12	12	12	12	12	12	12	12	12
	Long Side	6.6	7.9	8.8	12	6.7	7.9	8.9	12	6.7	7.9	8.9	12	6.7	8	8.9	12	6.8	8	8.9	12	6.8	8	8.9	12	6.8	8	8.9	12	6.8	8	9	12	7.2	8.5	9.5	12	7.2	8.5	9.4	12
44	Short Side	9.1	11.1	12	12	9.4	11.5	12	12	9.7	11.9	12	12	10.0	12	12	12	10.2	12	12	12	10.4	12	12	12	10.6	12	12	12	11.3	12	12	12	11.4	12	12	12	11.6	12	12	12
	Long Side	6.6	7.9	8.8	12	6.7	7.9	8.9	12	6.7	7.9	8.9	12	6.7	8	8.9	12	6.8	8	8.9	12	6.8	8	8.9	12	6.8	8	9	12	7.0	8.3	9.3	12	7.1	8.3	9.3	12	7.1	8.4	9.3	12
46	Short Side	8.9	10.8	12	12	9.2	11.2	12	12	9.5	11.6	12	12	9.8	12.0	12	12	10.0	12	12	12	10.2	12	12	12	10.9	12	12	12	11.1	12	12	12	11.2	12	12	12				
	Long Side	6.6	7.9	8.8	12	6.7	7.9	8.9	12	6.7	7.9	8.9	12	6.7	8	8.9	12	6.8	8	8.9	12	6.8	8	8.9	12	7.0	8.3	9.3	12	7.0	8.3	9.3	12	7.1	8.3	9.3	12				
48	Short Side	8.7	10.5	12.0	12	9	11.0	12	12	9.3	11.3	12	12	9.6	11.7	12	12	9.8	12.0	12	12	10.4	12	12	12	10.7	12	12	12	10.9	12	12	12								
	Long Side	6.6	7.9	8.8	12	6.7	7.9	8.9	12	6.7	7.9	8.9	12	6.7	8	8.9	12	6.8	8	8.9	12	7.0	8.3	9.2	12	7.0	8.3	9.3	12	7.0	8.3	9.3	12								
50	Short Side	8.4	10.2	11.6	12	8.8	10.7	12	12	9.1	11.0	12	12	9.4	11.4	12	12	10.0	12	12	12	10.3	12	12	12	10.5	12	12	12												
	Long Side	6.6	7.9	8.8	12	6.7	7.9	8.9	12	6.7	7.9	8.9	12	6.7	8	8.9	12	7.0	8.3	9.2	12	7.0	8.3	9.2	12	7.0	8.3	9.3	12												
52	Short Side	8.2	9.9	11.3	12	8.6	10.4	11.8	12	8.9	10.8	12	12	9.6	11.6	12	12	9.8	11.9	12	12	10.1	12	12	12																
	Long Side	6.6	7.9	8.8	12	6.7	7.9	8.9	12	6.7	8	8.9	12	7.0	8.3	9.2	12	7.0	8.3	9.2	12	7.0	8.3	9.2	12																
54	Short Side	8	9.7	10.9	12	8.4	10.1	11.5	12	8.7	10.5	11.9	12	9.4	11.3	12	12	9.6	11.7	12	12																				
	Long Side	6.6	7.9	8.8	12	6.7	7.9	8.9	12	6.7	7.9	8.9	12	7.0	8.3	9.2	12	7.0	8.3	9.2	12																				
56	Short Side	7.8	9.4	10.6	12	8.2	9.9	11.1	12	8.8	10.7	12	12	9.2	11.1	12	12																								
	Long Side	12	7.9	8.8	12	6.7	7.9	8.9	12	6.9	8.2	9.2	12	7.0	8.2	9.2	12																								
58	Short Side	7.6	9.1	10.3	12	8.3	10.0	11.3	12	8.7	10.4	11.8	12																												
	Long Side	6.6	7.9	8.8	12	6.9	8.2	9.2	12	6.9	8.2	9.2	12																												
60	Short Side	7.4	8.9	10.0	12	8.1	9.7	10.9	12	8.5	10.2	11.5	12																												
	Long Side	6.6	7.9	8.8	12	6.9	8.2	9.2	12	6.9	8.2	9.2	12																												
62	Short Side	7.5	9	10.1	12	7.9	9.4	10.6	12																																
	Long Side	6.9	8.2	9.2	12	6.9	8.2	9.2	12																																
64	Short Side	7.3	8.7	9.8	12	7.7	9.2	10.3	12																																
	Long Side	6.9	8.2	9.2	12	6.9	8.2	9.2	12																																
66	Short Side	7.1	8.4	9.4	12																																				
	Long Side	6.9	8.2	9.2	12																																				
67.875	Short Side	6.9	8.2	9.1	12																																				
	Long Side	6.9	8.2	9.1	12																																				

(continues on next sheet)

TABLE DIMENSIONS MAY BE ORIENTED VERTICALLY OR HORIZONTALLY AS SHOWN.

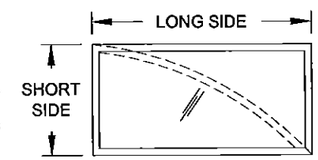

NOTES:

1) BUCK DIMENSIONS SHOWN.

2) FOR SIZES NOT SHOWN, ROUND UP TO THE NEXT AVAILABLE SHORT OR LONG DIMENSION.

3) FOR ARCHITECTURAL WINDOWS, FIND THE SMALLEST WINDOW SIZE IN THE TABLE ABOVE WHICH THE OVERALL DIMENSIONS COMPLETELY FIT WITHIN.

PRODUCT REVISED
as complying with the Florida Building Code
Acceptance No. 13-1125.04
Expiration Date 08/11/2020
By Manuel Perez
Miami Dade Product Control

Rev 1	
Rev 2	
Rev 3	

1070 TECHNOLOGY DRIVE
N. VENICE, FL 34275
P.O. BOX 1529
NOKOMIS, FL 34274
(941)-480-1600
CERT. OF AUTH. #29296

Date	10/20/13
Drawn By	J ROSOWSKI
Rev.	
Title	PREMIERVUE FIXED WINDOW NOA
Desc.	DP AND ANCHOR OC, C
DWG No.	MD-2720.1
Sheet	4 OF 9
Scale	NTS
Series	PW-2720

ANTHONY LYNN MILLER
LICENSE
No. 58705
STATE OF FLORIDA
PROFESSIONAL ENGINEER
5/22/15

A. LYNN MILLER, P.E.
P.E.# 58705

TABLE 7: *(cont.)*

Maximum Allowable Anchor O.C. Spacing (In)

Glass Type D & E		Long Side (In)																																									
		109-7/8				112				116				120				124				128				132				140				144				144-7/8			
Short Side (In)	Anchor Type →	A	B	C	D	A	B	C	D	A	B	C	D	A	B	C	D	A	B	C	D	A	B	C	D	A	B	C	D	A	B	C	D	A	B	C	D	A	B	C	D
30	Short Side	12	12	12	12	12	12	12	12	12	12	12	12	12	12	12	12	12	12	12	12	12	12	12	12	12	12	12	12	12	12	12	12	12	12	12	12	12	12	12	12
	Long Side	7.5	8.8	9.8	12	7.4	8.6	9.8	12	7.4	8.7	9.7	12	7.4	8.7	9.7	12	7.4	8.7	9.6	12	7.3	8.6	9.6	12	7.3	8.6	9.6	12	9.2	10.9	12	12	9.2	10.8	12	12	9.2	10.8	12	12
32	Short Side	12	12	12	12	12	12	12	12	12	12	12	12	12	12	12	12	12	12	12	12	12	12	12	12	12	12	12	12	12	12	12	12								
	Long Side	7	8.3	9.2	12	7	8.3	9.2	12	7	8.2	9.2	12	7	8.2	9.1	12	6.9	8.2	9.1	12	6.9	8.1	9	12	8.7	10.3	11.5	12	8.7	10.2	11.4	12	8.7	10.2	11.3	12				
34	Short Side	12	12	12	12	12	12	12	12	12	12	12	12	12	12	12	12	12	12	12	12	12	12	12	12	12	12	12	12												
	Long Side	6.9	8.1	9.0	12	6.9	8.1	9	12	6.9	8.1	9	12	6.9	8.1	9	12	8.3	9.8	10.9	12	8.3	9.8	10.9	12	8.3	9.7	10.8	12												
36	Short Side	12	12	12	12	12	12	12	12	12	12	12	12	12	12	12	12	12	12	12	12	12.0	12.0	12.0	12.0																
	Long Side	6.9	8.1	9	12	6.9	8.1	9	12	8	9.4	10.5	12	8.0	9.4	10.5	12	7.9	9.3	10.4	12	7.9	9.3	10.3	12.0																
38	Short Side	12	12	12	12	12	12	12	12	12	12	12	12	12	12	12	12																								
	Long Side	7.7	9.1	10.1	12	7.7	9.1	10.1	12	7.6	9.0	10	12	7.6	9	10	12																								
40	Short Side	12	12	12	12	12	12	12	12																																
	Long Side	7.4	8.7	9.7	12	7.4	8.7	9.7	12																																

GLASS TYPE D (7/16" Lami.)
7/16" Lami. (3/16" HS - .090" SG - 3/16" HS

GLASS TYPE E (1-1/16" Lami. IG)
3/16" HS - .090" SG - 3/16" HS - 7/16" Air - 3/16" T

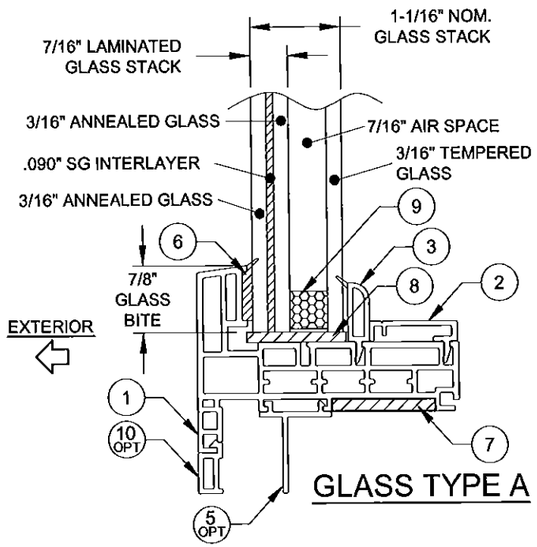

GLASS TYPE A

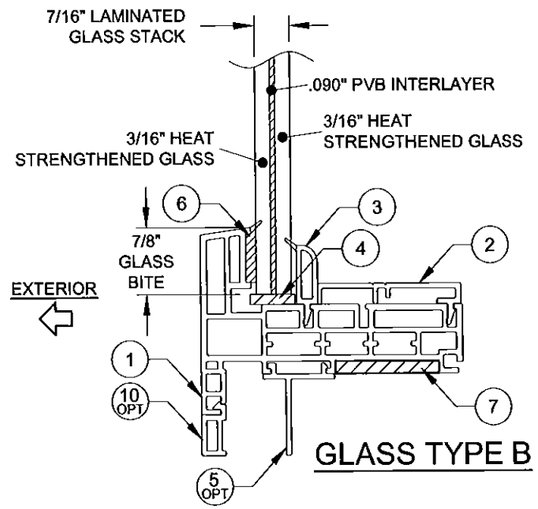

GLASS TYPE B

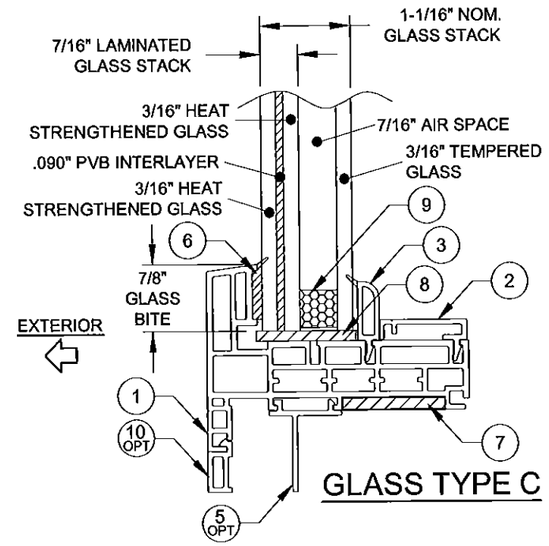

GLASS TYPE C

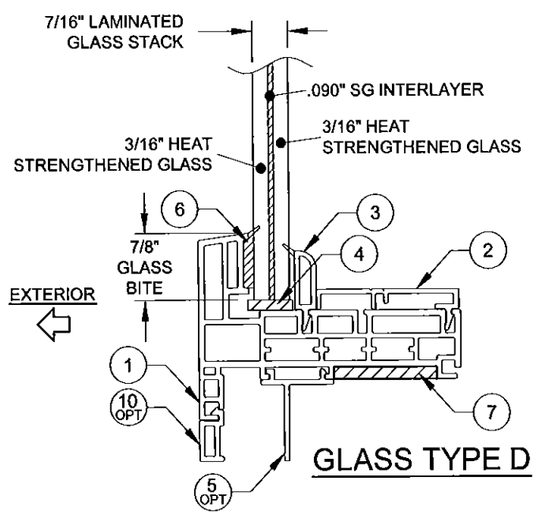

GLASS TYPE D

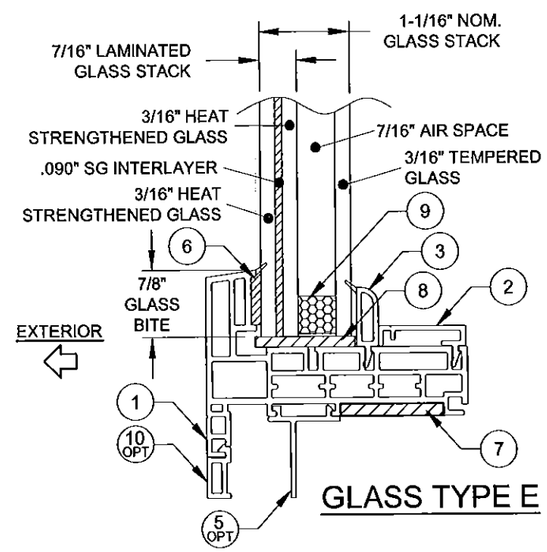

GLASS TYPE E

GLAZING NOTES:
"A" = ANNEALED
"HS" = HEAT STRENGTHENED
"T" = TEMPERED
"PVB" = DUPONT .090" BUTACITE PVB
"SG" = DUPONT .090" SENTRYGLAS

FOR COLOR-LAMINATED PVC, THERE SHALL BE NO LAMINATE, ADHESIVE, RESIN OR BONDING AGENTS INSIDE THE GLAZING POCKETS. SEE SHEET 9 FOR LAMINATE LOCATION.

PRODUCT REVISED
as complying with the Florida Building Code
Acceptance No 13-1125.04
Expiration Date 08/31/2020
By Manuel Perez
Miami Dade Product Control

Rev 3	Rev 2	Rev 1

1070 TECHNOLOGY DRIVE
N. VENICE, FL 34275
P.O. BOX 1529
NOKOMIS, FL 34274
(941)-480-1600
CERT. OF AUTH. #29296

Series	Desc.	Scale	Sheet	DWG No.	Rev.
PW-2720	GLAZING DETAILS	NTS	5 OF 9	MD-2720.1	

Drawn By: J ROSOWSKI
Date: 10/20/13
Title: PREMIERVUE FIXED WINDOW NOA

ANTHONY LYNN MILLER
LICENSE
No. 58705
STATE OF FLORIDA
PROFESSIONAL ENGINEER
5/22/15

A. LYNN MILLER, P.E.
P.E.# 58705

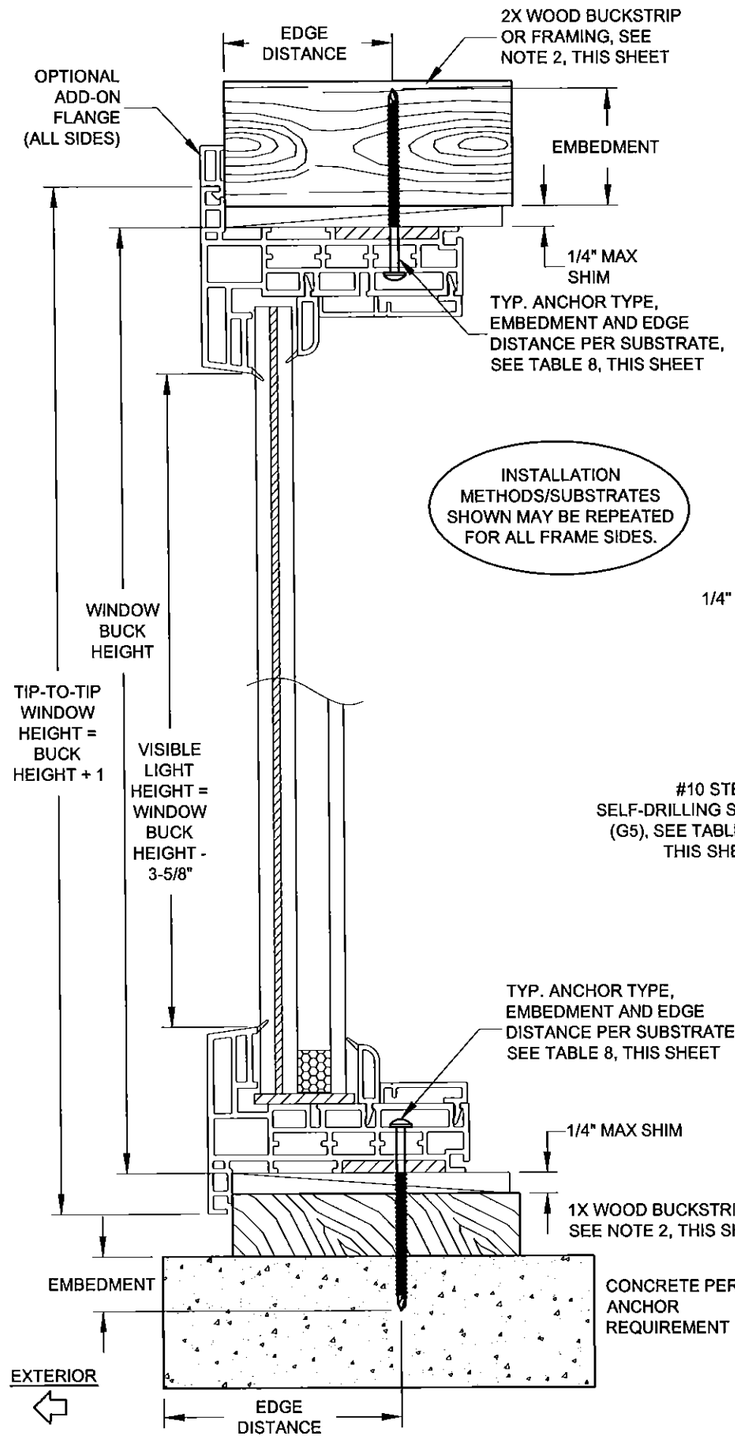

INSTALLATION METHODS/SUBSTRATES SHOWN MAY BE REPEATED FOR ALL FRAME SIDES.

VERTICAL SECTION B-B

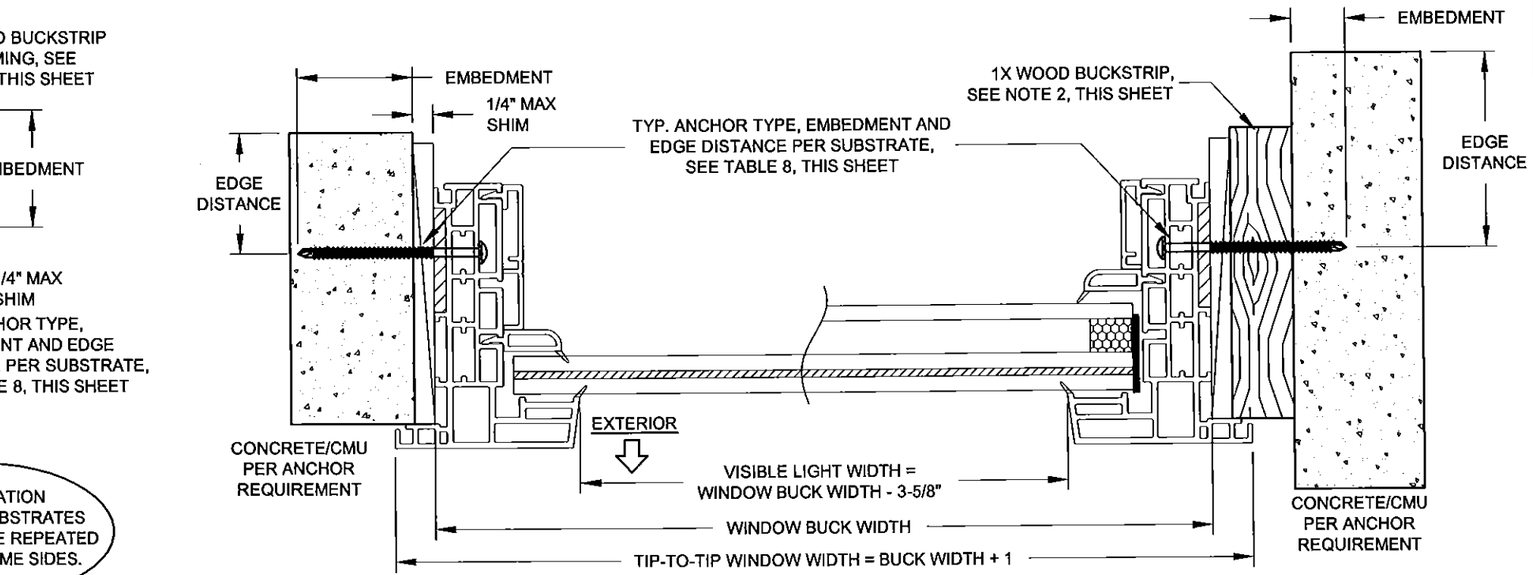

HORIZONTAL SECTION A-A

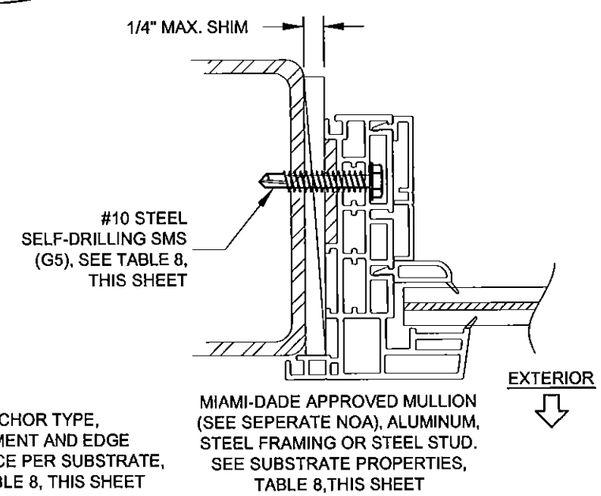

TABLE 8:

Group	Anchor	Substrate	Min. Edge Distance	Min. Embedment
A	3/16" Steel Ultracon	Ungrouted CMU, (ASTM C-90)	1"	1-1/4"
B	#10 Sheet Metal Screw, Steel (G5), 410 SS or 18-8 SS	P.T. Southern Pine (SG=0.55)	9/16"	1-3/8"
		Aluminum, 6063-T5 min.	3/8"	0.050" *
		A36 Steel	3/8"	0.035" *
		Steel Stud, Gr. 33 min.	3/8"	0.035" (20 Ga) *
C	3/16" Steel Ultracon	Grouted CMU, (ASTM C-90)	2-1/2"	1-3/4"
	1/4" Steel Ultracon	Ungrouted CMU, (ASTM C-90)	1"	1-1/4"
D	3/16" Steel Ultracon	Grouted CMU, (ASTM C-90)	2-1/2"	2-1/4"
		Concrete (min. 2.85 ksi)	1"	1-3/8"
	1/4" Steel Ultracon	Grouted CMU, (ASTM C-90)	2-1/2"	1-3/4"
		Concrete (min. 2.85 ksi)	1"	1-3/8"
		Ungrouted CMU, (ASTM C-90)	2-1/2"	1-1/4"
	1/4" 410 SS CreteFlex	Ungrouted CMU, (ASTM C-90)	1-3/4"	1-1/4"
		Concrete (min. 2.85 ksi)	1-3/4"	1-1/4"

* MIN. OF 3 THREADS BEYOND THE METAL SUBSTRATE.

INSTALLATION NOTES:

1. USE ONLY ANCHORS LISTED ON THIS SHEET. FOLLOW EMBEDMENT AND EDGE DISTANCE LIMITS.

2. WOOD BUCKS DEPICTED ON THIS SHEET AS "1X", ARE BUCKS WHOSE TOTAL THICKNESS IS LESS THAN 1-1/2". 1X WOOD BUCKS ARE OPTIONAL IF UNIT CAN BE INSTALLED DIRECTLY TO SOLID CONCRETE OR CMU. WOOD BUCKS DEPICTED AS "2X" ARE 1-1/2" THICK OR GREATER. INSTALLATION TO THE SUBSTRATE OF WOOD BUCKS TO BE ENGINEERED BY OTHERS OR AS APPROVED BY AUTHORITY HAVING JURISDICTION. WOOD BUCKS SHALL BE SECURED PER CURRENT FBC.

3. FOR ATTACHMENT TO METAL: THE STRUCTURAL MEMBER SHALL BE OF A SIZE TO PROVIDE FULL SUPPORT TO THE WINDOW FRAME.

4. IF APPLICABLE, LOWER DESIGN PRESSURE FROM EITHER WINDOW OR MULLION NOA APPLIES TO WHOLE SYSTEM.

PRODUCT REVISED
as complying with the Florida
Building Code
Acceptance No 13-1125.04
Expiration Date 08/14/2020
By Manuel Perez
Miami Dade Product Control

Rev 1	
Rev 2	
Rev 3	

1070 TECHNOLOGY DRIVE
N. VENICE, FL 34275
P.O. BOX 1529
NOKOMIS, FL 34274
(941)-480-1600
CERT. OF AUTH. #29296

Series	Desc.	Sheet	Scale	DWG No.	Drawn By	Date	Rev.
PW-2720	NTS	6 OF 9	MD-2720.1	J ROSOWSKI	10/20/13		

Title: PREMIERVUE FIXED WINDOW NOA — FLANGE INSTALLATION

ANTHONY LYNN MILLER
LICENSE
No. 58705
STATE OF FLORIDA
PROFESSIONAL ENGINEER
5/22/15

A. LYNN MILLER, P.E.
P.E.# 58705

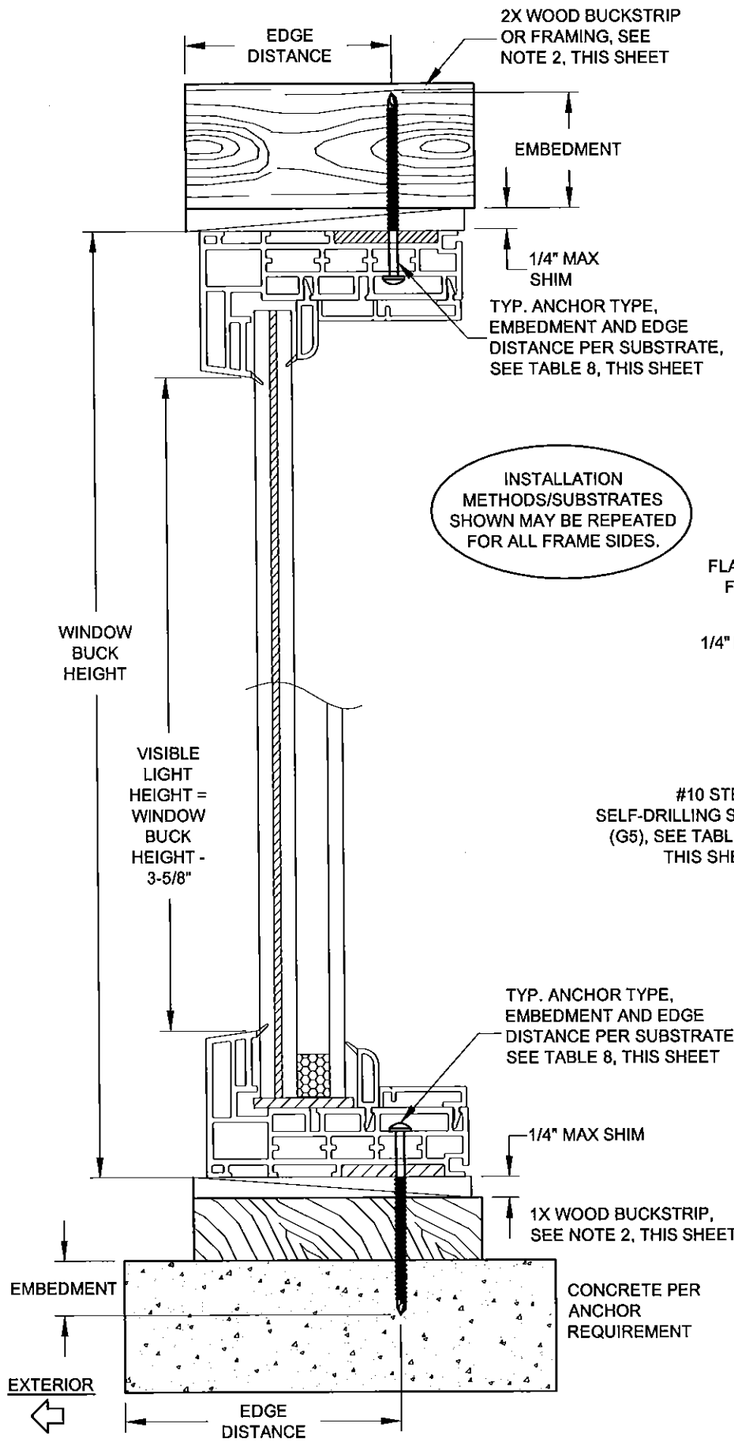

VERTICAL SECTION B-B

INSTALLATION METHODS/SUBSTRATES SHOWN MAY BE REPEATED FOR ALL FRAME SIDES.

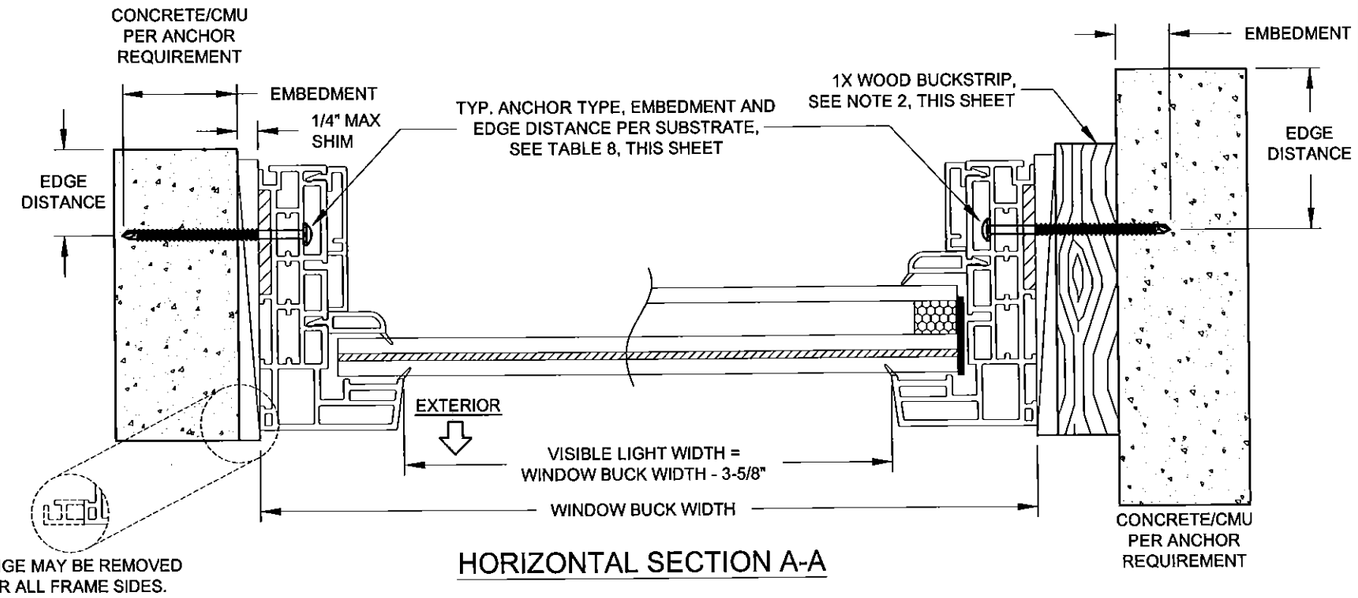

HORIZONTAL SECTION A-A

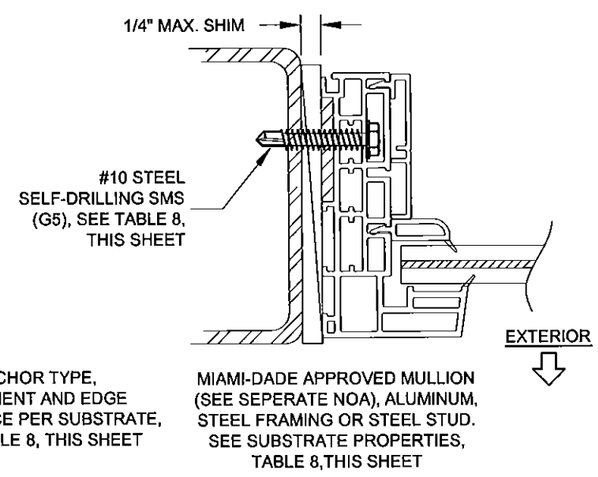

TABLE 8:

Group	Anchor	Substrate	Min. Edge Distance	Min. Embedment
A	3/16" Steel Ultracon	Ungrouted CMU, (ASTM C-90)	1"	1-1/4"
B	#10 Sheet Metal Screw, Steel (G5), 410 SS or 18-8 SS	P.T. Southern Pine (SG=0.55)	9/16"	1-3/8"
		Aluminum, 6063-T5 min.	3/8"	0.050" *
		A36 Steel	3/8"	0.035" *
		Steel Stud, Gr. 33 min.	3/8"	0.035" (20 Ga) *
C	3/16" Steel Ultracon	Grouted CMU, (ASTM C-90)	2-1/2"	1-3/4"
	1/4" Steel Ultracon	Ungrouted CMU, (ASTM C-90)	1"	1-1/4"
D	3/16" Steel Ultracon	Grouted CMU, (ASTM C-90)	2-1/2"	2-1/4"
		Concrete (min. 2.85 ksi)	1"	1-3/8"
	1/4" Steel Ultracon	Grouted CMU, (ASTM C-90)	2-1/2"	1-3/4"
		Concrete (min. 2.85 ksi)	1"	1-3/8"
		Ungrouted CMU, (ASTM C-90)	2-1/2"	1-1/4"
	1/4" 410 SS CreteFlex	Ungrouted CMU, (ASTM C-90)	1-3/4"	1-1/4"
		Concrete (min. 2.85 ksi)	1-3/4"	1-1/4"

* MIN. OF 3 THREADS BEYOND THE METAL SUBSTRATE.

INSTALLATION NOTES:

1. USE ONLY ANCHORS LISTED ON THIS SHEET. FOLLOW EMBEDMENT AND EDGE DISTANCE LIMITS.

2. WOOD BUCKS DEPICTED ON THIS SHEET AS "1X", ARE BUCKS WHOSE TOTAL THICKNESS IS LESS THAN 1-1/2". 1X WOOD BUCKS ARE OPTIONAL IF UNIT CAN BE INSTALLED DIRECTLY TO SOLID CONCRETE OR CMU. WOOD BUCKS DEPICTED AS "2X" ARE 1-1/2" THICK OR GREATER. INSTALLATION TO THE SUBSTRATE OF WOOD BUCKS TO BE ENGINEERED BY OTHERS OR AS APPROVED BY AUTHORITY HAVING JURISDICTION. WOOD BUCKS SHALL BE SECURED PER CURRENT FBC.

3. FOR ATTACHMENT TO METAL: THE STRUCTURAL MEMBER SHALL BE OF A SIZE TO PROVIDE FULL SUPPORT TO THE WINDOW FRAME.

4. IF APPLICABLE, LOWER DESIGN PRESSURE FROM EITHER WINDOW OR MULLION NOA APPLIES TO WHOLE SYSTEM.

PRODUCT APPROVED
as complying with the Florida
Building Code
Acceptance No 13-1125.04
Expiration Date 08/11/2020
By
Miami-Dade Product Control

Rev 1	
Rev 2	
Rev 3	

1070 TECHNOLOGY DRIVE
N. VENICE, FL 34275
P.O. BOX 1529
NOKOMIS, FL 34274
(941)-480-1600
CERT. OF AUTH. #29296

Title	Desc.	Drawn By	Date	Rev.
PREMIERVUE FIXED WINDOW NOA	EQUAL LEG INSTALLATION	J ROSOWSKI	10/20/13	

Series	Scale	Sheet	DWG No.
PW-2720	NTS	7 OF 9	MD-2720.1

ANTHONY LYNN MILLER
LICENSE
No. 58705
5/22/15
STATE OF FLORIDA
PROFESSIONAL ENGINEER

A. LYNN MILLER, P.E.
P.E.# 58705

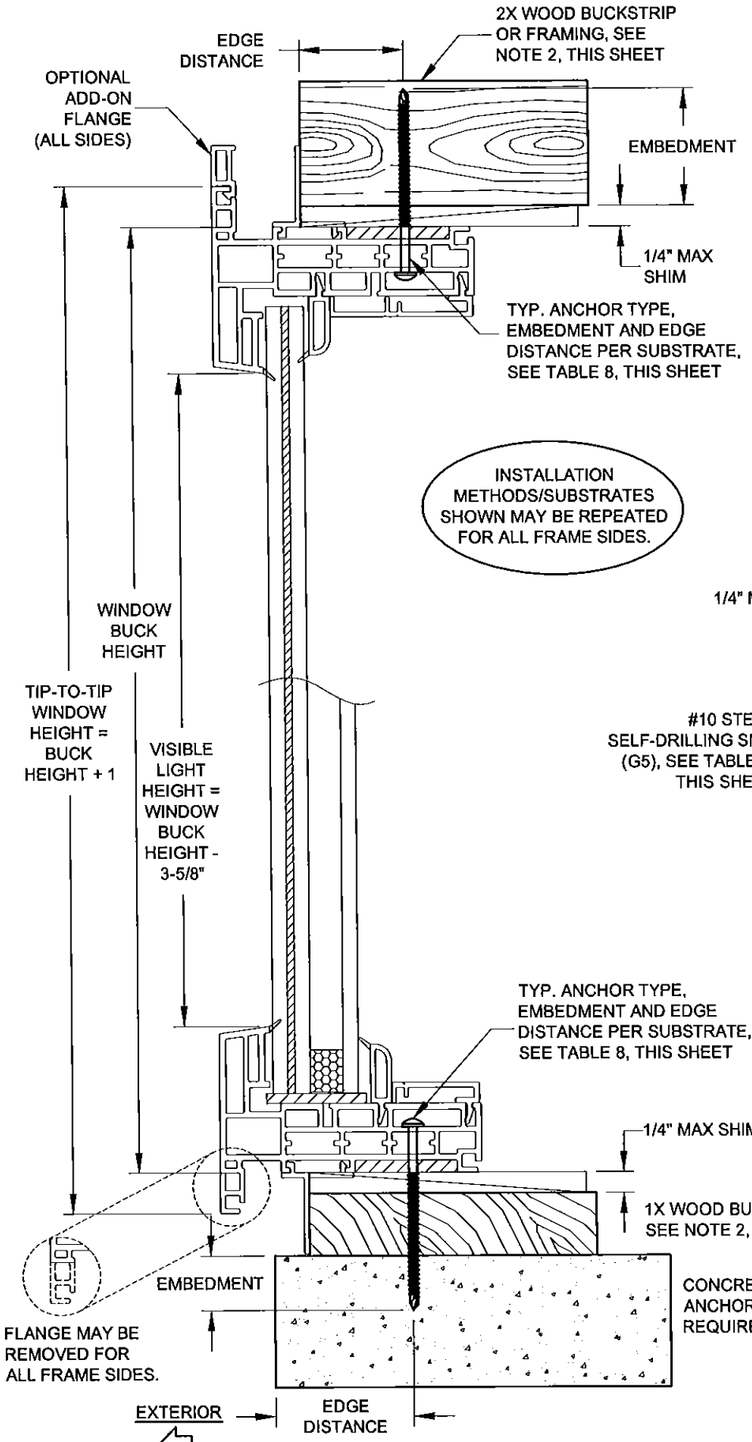

INSTALLATION METHODS/SUBSTRATES SHOWN MAY BE REPEATED FOR ALL FRAME SIDES.

VERTICAL SECTION B-B

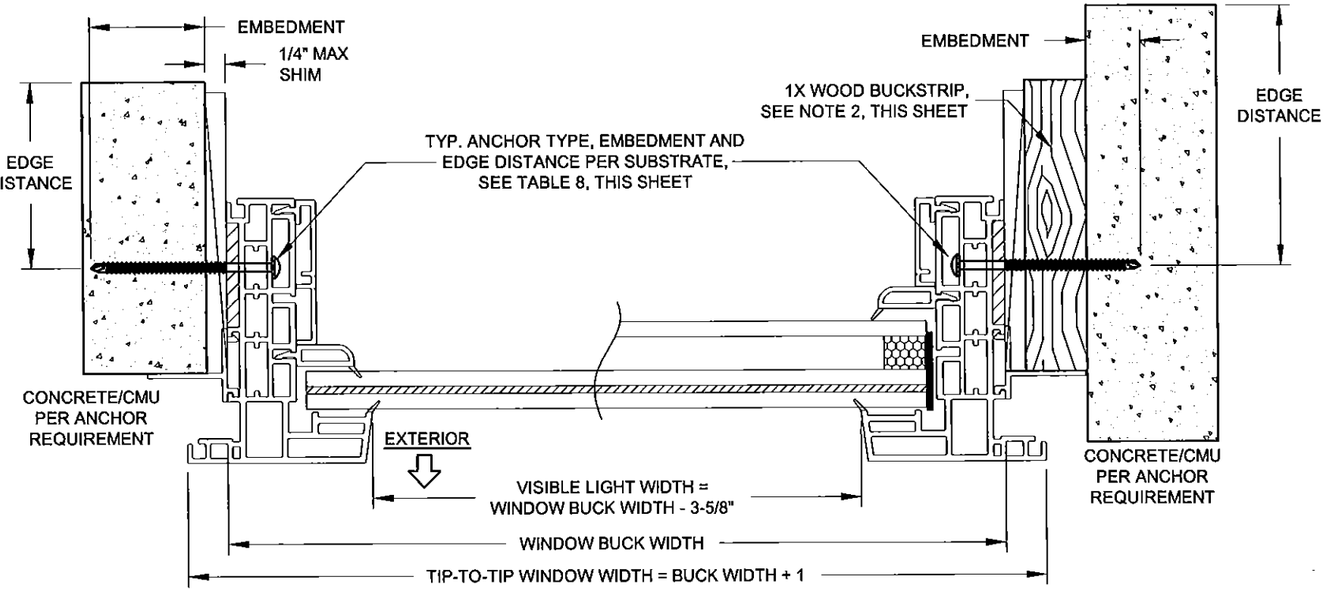

HORIZONTAL SECTION A-A

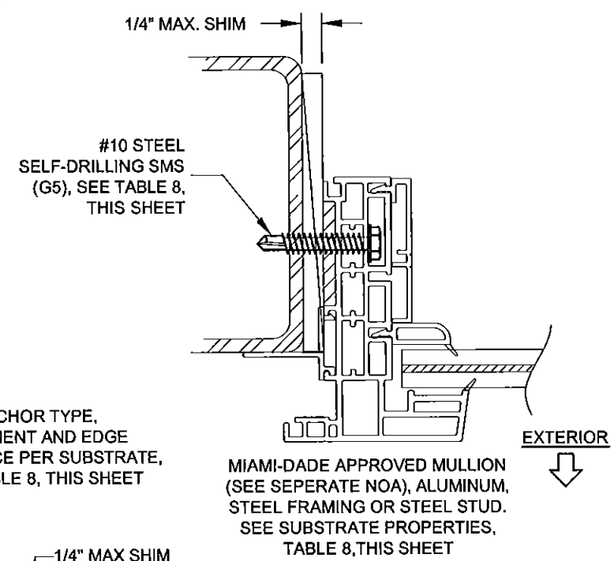

TABLE 8:

Group	Anchor	Substrate	Min. Edge Distance	Min. Embedment
A	3/16" Steel Ultracon	Ungrouted CMU, (ASTM C-90)	1"	1-1/4"
B	#10 Sheet Metal Screw, Steel (G5), 410 SS or 18-8 SS	P.T. Southern Pine (SG=0.55)	9/16"	1-3/8"
		Aluminum, 6063-T5 min.	3/8"	0.050" *
		A36 Steel	3/8"	0.035" *
		Steel Stud, Gr. 33 min.	3/8"	0.035" (20 Ga) *
C	3/16" Steel Ultracon	Grouted CMU, (ASTM C-90)	2-1/2"	1-3/4"
	1/4" Steel Ultracon	Ungrouted CMU, (ASTM C-90)	1"	1-1/4"
D	3/16" Steel Ultracon	Grouted CMU, (ASTM C-90)	2-1/2"	2-1/4"
		Concrete (min. 2.85 ksi)	1"	1-3/8"
	1/4" Steel Ultracon	Grouted CMU, (ASTM C-90)	2-1/2"	1-3/4"
		Concrete (min. 2.85 ksi)	1"	1-3/8"
		Ungrouted CMU, (ASTM C-90)	2-1/2"	1-1/4"
	1/4" 410 SS CreteFlex	Ungrouted CMU, (ASTM C-90)	1-3/4"	1-1/4"
		Concrete (min. 2.85 ksi)	1-3/4"	1-1/4"

* MIN. OF 3 THREADS BEYOND THE METAL SUBSTRATE.

INSTALLATION NOTES:

1. USE ONLY ANCHORS LISTED ON THIS SHEET. FOLLOW EMBEDMENT AND EDGE DISTANCE LIMITS.

2. WOOD BUCKS DEPICTED ON THIS SHEET AS "1X", ARE BUCKS WHOSE TOTAL THICKNESS IS LESS THAN 1-1/2". 1X WOOD BUCKS ARE OPTIONAL IF UNIT CAN BE INSTALLED DIRECTLY TO SOLID CONCRETE OR CMU. WOOD BUCKS DEPICTED AS "2X" ARE 1-1/2" THICK OR GREATER. INSTALLATION TO THE SUBSTRATE OF WOOD BUCKS TO BE ENGINEERED BY OTHERS OR AS APPROVED BY AUTHORITY HAVING JURISDICTION. WOOD BUCKS SHALL BE SECURED PER CURRENT FBC.

3. FOR ATTACHMENT TO METAL: THE STRUCTURAL MEMBER SHALL BE OF A SIZE TO PROVIDE FULL SUPPORT TO THE WINDOW FRAME.

4. IF APPLICABLE, LOWER DESIGN PRESSURE FROM EITHER WINDOW OR MULLION NOA APPLIES TO WHOLE SYSTEM.

PRODUCT REVISED
as complying with the Florida Building Code
Acceptance No. 13-1125.04
Expiration Date 08/11/2020
By Manuel Inez
Miami-Dade Product Control

Rev. 1	Rev. 2	Rev. 3

1070 TECHNOLOGY DRIVE
N. VENICE, FL 34275
P.O. BOX 1529
NOKOMIS, FL 34274
(941)-480-1600
CERT. OF AUTH. #29296

Series	Title	Scale	Sheet	DWG No.	Drawn By	Date	Rev.
PW-2720	PREMIERVUE FIXED WINDOW NOA / FIN INSTALLATION	NTS	8 OF 9	MD-2720.1	J ROSOWSKI	10/20/13	

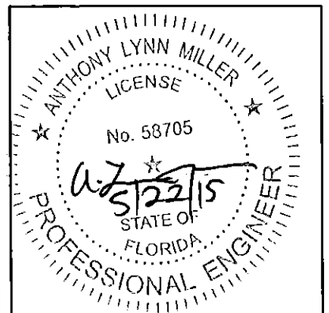

A. LYNN MILLER, P.E.
P.E.# 58705

TABLE 9:

Item #	PGT Part #	Description	Material
1	8304	Frame Head, Sill & Jamb	Rigid PVC
2	8345	Installation Fastener Cover	Rigid PVC
3	8326	Glass Beading	Rigid PVC
4	71752K	Setting Block, 1/8" x 7/16" x 4"	Neoprene, Duro. 85 +/-5
5	8343	Optional Add-on Fin	Rigid PVC
6		Sikaflex 552/GE 7700 Backbed.	
7	18523	Rigid Filler	Neoprene, Duro. 85 +/-5
9	62870	Quanex 7/16" SuperSpacer	Foam EPDM w/ Dessicant
10	8344	Optional Add-on Flange	Rigid PVC

FLORIDA-BRONZE LAMINATED & WHITE RIGID PVC EXTRUSIONS BY L.B. PLASTICS, INC, ARE TO BE LABELED WITH AAMA EXTRUDER CODE, EXTRUDER NAME, CITY, STATE AND MDCA REQUIREMENTS

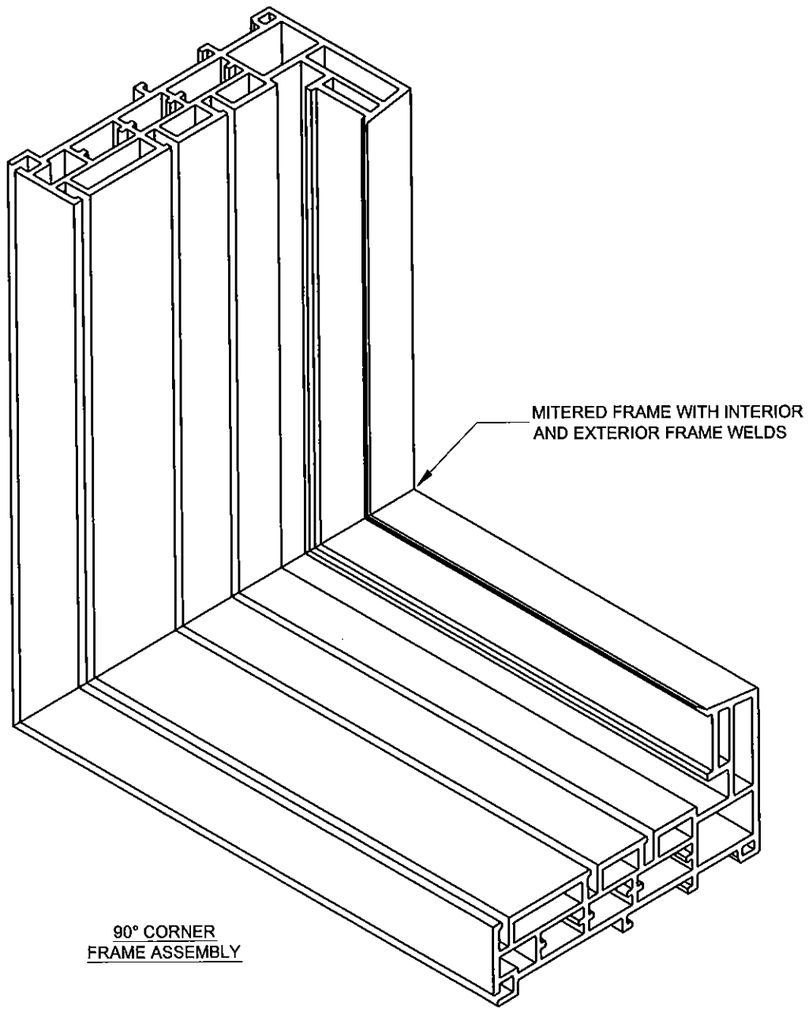

90° CORNER FRAME ASSEMBLY

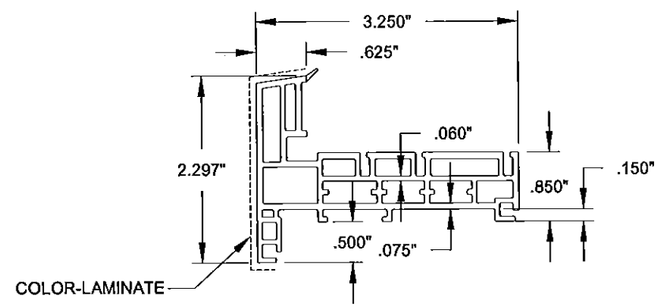

1 FRAME HEAD, SILL & JAMB
#8304, RIGID PVC

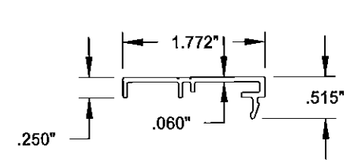

2 INSTALLATION FASTENER COVER
#8345, RIGID PVC

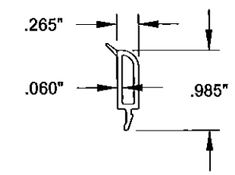

3 MONO & I.G. GLASS BEADING
#8326, RIGID PVC

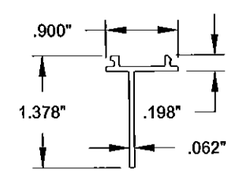

5 OPTIONAL ADD-ON FIN
#8343, RIGID PVC

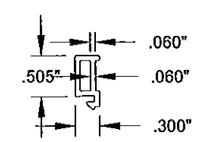

10 OPTIONAL ADD-ON FLANGE
#8344, RIGID PVC

NOTES:

1. FRAME HEAD, JAMBS AND SILL ARE EXTRUDED RIGID PVC LINEALS. ALL CORNERS ARE MITERED AND WELDED.

2. ITEMS #5 & #10, ARE NON-STRUCTURAL, ADD-ON PARTS. MASONRY FLANGE MAY BE EXTRUDED INTO FRAME AND CAN BE SCORED AND REMOVED PER INSTALLATION DETAILS ON SHEETS 7 & 8.

FOR COLOR-LAMINATED PVC, THERE SHALL BE NO LAMINATE, ADHESIVE, RESIN OR BONDING AGENTS INSIDE THE GLAZING POCKETS. SEE SHEET 9 FOR LAMINATE LOCATION.

PRODUCT REVISED
as complying with the Florida Building Code
Acceptance No 13-1125.04
Expiration Date 08/31/2020
By Manuel Liz
Miami Dade Product Control

Rev 1	
Rev 2	
Rev 3	

PGT®
CERT. OF AUTH. #29296
1070 TECHNOLOGY DRIVE
N. VENICE, FL 34275
P.O. BOX 1529
NOKOMIS, FL 34274
(941)-480-1600

Title	PREMIERVUE FIXED WINDOW NOA	Date	10/20/13
Desc.	PARTS AND BOM	Drawn By	J ROSOWSKI
Series	PW-2720	Scale	NTS
Sheet	9 OF 9	DWG No.	MD-2720.1
Rev.			

ANTHONY LYNN MILLER
LICENSE
No. 58705
STATE OF FLORIDA
PROFESSIONAL ENGINEER
5/22/15

A. LYNN MILLER, P.E.
P.E.# 58705