MIAMI-DADE COUNTY
DEPARTMENT OF REGULATORY AND ECONOMIC RESOURCES (RER)
BOARD AND CODE ADMINISTRATION DIVISION

MIAMI-DADE COUNTY
PRODUCT CONTROL SECTION
11805 SW 26 Street, Room 208
T (786) 315-2590 F (786) 315-2599
www.miamidade.gov/economy

NOTICE OF ACCEPTANCE (NOA)

La Finestra, L.C.
2790 N.W. 104 Court
Miami, FL 33172

SCOPE:

This NOA is being issued under the applicable rules and regulations governing the use of construction materials. The documentation submitted has been reviewed and accepted by Miami-Dade County RER - Product Control Section to be used in Miami Dade County and other areas where allowed by the Authority Having Jurisdiction (AHJ).

This NOA shall not be valid after the expiration date stated below. The Miami-Dade County Product Control Section (In Miami Dade County) and/or the AHJ (in areas other than Miami Dade County) reserve the right to have this product or material tested for quality assurance purposes. If this product or material fails to perform in the accepted manner, the manufacturer will incur the expense of such testing and the AHJ may immediately revoke, modify, or suspend the use of such product or material within their jurisdiction. RER reserves the right to revoke this acceptance, if it is determined by Miami-Dade County Product Control Section that this product or material fails to meet the requirements of the applicable building code.

This product is approved as described herein, and has been designed to comply with the Florida Building Code, including the High Velocity Hurricane Zone.

DESCRIPTION: Series "EKU-53" Outswing Aluminum Casement Window - L.M.I.

APPROVAL DOCUMENT: Drawing No. **FN-EKU53,** titled "EKU 53 Impact Windows", sheets 1 through 13 of 13, dated 07/18/13, with revision #5 dated 07/23/14, prepared by Bromley-Cook Engineering, Inc., signed and sealed by William D. Cook, P.E., bearing the Miami-Dade County Product Control Revision stamp with the Notice of Acceptance number and expiration date by the Miami-Dade County Product Control Section.

MISSILE IMPACT RATING: Large and Small Missile Impact Resistant

LABELING: Each unit shall bear a permanent label with the manufacturer's name or logo, city, state, model/series, and following statement: "Miami-Dade County Product Control Approved", unless otherwise noted herein.

RENEWAL of this NOA shall be considered after a renewal application has been filed and there has been no change in the applicable building code negatively affecting the performance of this product.

TERMINATION of this NOA will occur after the expiration date or if there has been a revision or change in the materials, use, and/or manufacture of the product or process. Misuse of this NOA as an endorsement of any product, for sales, advertising or any other purposes shall automatically terminate this NOA. Failure to comply with any section of this NOA shall be cause for termination and removal of NOA.

ADVERTISEMENT: The NOA number preceded by the words Miami-Dade County, Florida, and followed by the expiration date may be displayed in advertising literature. If any portion of the NOA is displayed, then it shall be done in its entirety.

INSPECTION: A copy of this entire NOA shall be provided to the user by the manufacturer or its distributors and shall be available for inspection at the job site at the request of the Building Official.

This NOA **revises NOA# 12-0503.04** and consists of this page 1 and evidence pages E-1, E-2 and E-3, as well as approval document mentioned above.

The submitted documentation was reviewed by **Manuel Perez, P.E.**

MIAMI-DADE COUNTY APPROVED

7/30/14

La Finestra, L.C.

NOTICE OF ACCEPTANCE: EVIDENCE SUBMITTED

A. DRAWINGS

1. Manufacturer's die drawings and sections.
2. Drawing No. **FN-EKU53,** titled "EKU-53 Impact Windows", sheets 1 through 13 of 13, dated 07/18/13, with revision #5 dated 07/23/14, prepared by Bromley-Cook Engineering, Inc., signed and sealed by William D. Cook, P.E.

B. TESTS

1. Test reports on: 1) Large Missile Impact Test per FBC, TAS 201-94
   2) Cyclic Wind Pressure Loading per FBC, TAS 203-94
   along with marked-up drawings and installation diagram of a 10 ft. high, eyebrow-top aluminum outswing doors, prepared by Hurricane Engineering & Testing, Inc., Test Report No. **HETI-11-3365,** dated 05/28/13, witnessed by Rafael E. Droz-Seda, P.E.
2. Test reports on: 1) Large Missile Impact Test per FBC, TAS 201-94
   2) Cyclic Wind Pressure Loading per FBC, TAS 203-94
   along with marked-up drawings and installation diagram of a 10 ft. high, arch-top aluminum outswing doors, prepared by Hurricane Engineering & Testing, Inc., Test Report No. **HETI-10-3010,** dated 04/14/10, witnessed by Candido F. Font, P.E. ***(Submitted under NOA# 10-0511.01)***
3. Test reports on: 1) Air Infiltration Test, per FBC, TAS 202-94
   2) Uniform Static Air Pressure Test, Loading per FBC TAS 202-94
   3) Water Resistance Test, per FBC, TAS 202-94
   4) Forced Entry Test, per FBC 2411 3.2.1 and TAS 202-94
   along with marked-up drawings and installation diagram of a 10 ft. high, arch-top aluminum outswing doors, prepared by Hurricane Engineering & Testing, Inc., Test Report No. **HETI-10-3009,** dated 04/14/10, witnessed by Candido F. Font, P.E. ***(Submitted under NOA# 10-0511.01)***
4. Test reports on: 1) Large Missile Impact Test per FBC, TAS 201-94
   2) Cyclic Wind Pressure Loading per FBC, TAS 203-94
   along with marked-up drawings and installation diagram of a 10 ft. high aluminum outswing pair of doors, prepared by Hurricane Engineering & Testing, Inc., Test Report No. **HETI-10-3003,** dated 04/14/10, witnessed by Candido F. Font, P.E. ***(Submitted under NOA# 10-0511.01)***
5. Test reports on: 1) Air Infiltration Test, per FBC, TAS 202-94
   2) Uniform Static Air Pressure Test, Loading per FBC TAS 202-94
   3) Water Resistance Test, per FBC, TAS 202-94
   4) Forced Entry Test, per FBC 2411 3.2.1 and TAS 202-94
   along with marked-up drawings and installation diagram of a 10 ft. high aluminum outswing pair of doors, prepared by Hurricane Engineering & Testing, Inc., Test Report No. **HETI-10-3002,** dated 04/14/10, witnessed by Candido F. Font, P.E. ***(Submitted under NOA# 10-0511.01)***

Manuel Perez

Manuel Perez, P.E.
Product Control Examiner
NOA No. 13-1203.06
Expiration Date: February 27, 2018
Approval Date: August 07, 2014

NOTICE OF ACCEPTANCE: EVIDENCE SUBMITTED

B. TESTS (CONTINUED)

6. Test reports on: 1) Large Missile Impact Test per FBC, TAS 201-94
2) Cyclic Wind Pressure Loading per FBC, TAS 203-94
along with marked-up drawings and installation diagram of a 10 ft. high aluminum outswing pair of doors, prepared by Hurricane Engineering & Testing, Inc., Test Report No. **HETI-09-2677,** dated 04/14/10, witnessed by Candido F. Font, P.E.
(Submitted under NOA# 10-0511.01)

7. Test reports on: 1) Air Infiltration Test, per FBC, TAS 202-94
2) Uniform Static Air Pressure Test, Loading per FBC TAS 202-94
3) Water Resistance Test, per FBC, TAS 202-94
4) Forced Entry Test, per FBC 2411 3.2.1 and TAS 202-94
along with marked-up drawings and installation diagram of a 10 ft. high aluminum outswing pair of doors, prepared by Hurricane Engineering & Testing, Inc., Test Report No. **HETI-09-2676,** dated 04/14/10, witnessed by Candido F. Font, P.E.
(Submitted under NOA# 10-0511.01)

8. Test reports on: 1) Air Infiltration Test, per FBC, TAS 202-94
2) Uniform Static Air Pressure Test, Loading per FBC TAS 202-94
3) Water Resistance Test, per FBC, TAS 202-94
4) Large Missile Impact Test per FBC, TAS 201-94
5) Cyclic Wind Pressure Loading per FBC, TAS 203-94
6) Forced Entry Test, per FBC 2411 3.2.1 and TAS 202-94
along with marked-up drawings and installation diagram of an aluminum outswing entrance door, prepared by Fenestration Testing Laboratory, Inc., Test Report No. **FTL-4531,** dated 06/01/05, witnessed by Edmundo Largaespada, P.E.
(Submitted under NOA # 05-0725.03)

9. Test reports on: 1) Air Infiltration Test, per FBC, TAS 202-94
2) Uniform Static Air Pressure Test, Loading per FBC, TAS 202-94
3) Water Resistance Test, per FBC, TAS 202-94
4) Forced Entry Test, per FBC 2411 3.2.1 and TAS 202-94
along with marked-up drawings and installation diagram of an outswing aluminum entrance door, prepared by Fenestration Testing Laboratory, Inc., Test Report No. **FTL-3881,** dated 08/23/04, witnessed by Edmundo Largaespada, P.E.
(Submitted under NOA # 05-0203.02)

Manuel Perez, P.E.
Product Control Examiner
NOA No. 13-1203.06
Expiration Date: February 27, 2018
Approval Date: August 07, 2014

NOTICE OF ACCEPTANCE: EVIDENCE SUBMITTED

C. CALCULATIONS

1. Anchor verification calculations and structural analysis, complying with FBC-2007, dated 04/26/10 and revised on 08/19/10 to comply with **FBC-2010**, prepared by Bromley-Cook Engineering, Inc., signed and sealed by William D. Cook, P.E.
   (Submitted under NOA# 10-0511.01)
2. Glazing complies with **ASTM E1300-04**

D. QUALITY ASSURANCE

1. Miami–Dade Department of Regulatory and Economic Resources (RER).

E. MATERIAL CERTIFICATIONS

1. Notice of Acceptance No. **13–0129.27** issued to **E.I. DuPont DeNemours & Co., Inc.** for their **"DuPont Butacite® PVB Interlayer"** dated 04/11/13, expiring on 12/11/16.

F. STATEMENTS

1. Statement letter of conformance, complying with **FBC 2010**, dated November 11, 2013, signed and sealed by William D. Cook, P.E.
2. Statement letter of no financial interest, dated November 11, 2013, signed and sealed by William D. Cook, P.E.
3. Laboratory compliance letter for Test Report No. **FTL- 4531**, issued by Fenestration Testing Laboratory, Inc., dated July 11, 2005, signed and sealed by Edmundo Largaespada, P.E.
   (Submitted under NOA # 05-0725.03)
4. Laboratory compliance letter for Test Report No. **FTL- 3881**, issued by Fenestration Testing Laboratory, Inc., dated October 18, 2004, signed and sealed by Edmundo Largaespada, P.E.
   (Submitted under NOA # 05-0203.02)

G. OTHERS

1. Notice of Acceptance No. **12-0503.04**, issued to La Finestra, L.C. for their Series "EKU-53" Outswing Aluminum Casement Window – L.M.I., approved on 07/19/12 and expiring on 02/27/18.

Manuel Perez, P.E.
Product Control Examiner
NOA No. 13-1203.06
Expiration Date: February 27, 2018
Approval Date: August 07, 2014

LA FINESTRA, LC SERIES: EKU 53 OUTSWING CASEMENT WINDOW (HIGH LOAD)

TYPICAL UNIT ELEVATIONS

MAX. WINDOW SIZES SHOWN
MULTIPLE UNITS STACKED SIDE BY SIDE
MUST HAVE APPROVED MULLIONS BETWEEN EACH WINDOW FRAME
*(SEE ALTERNATE CONFIGURATIONS ON PAGE 2)

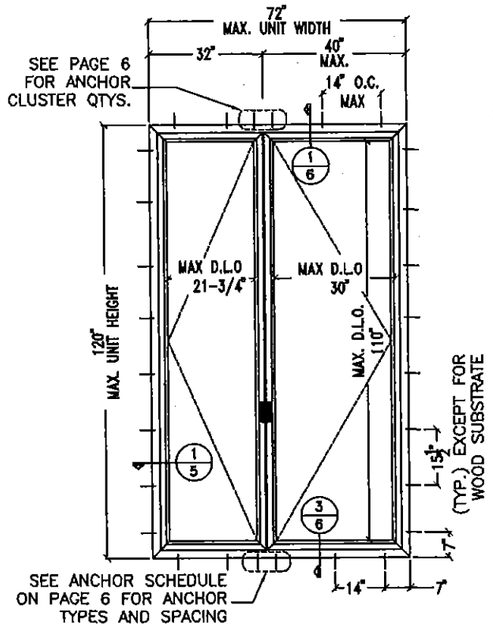

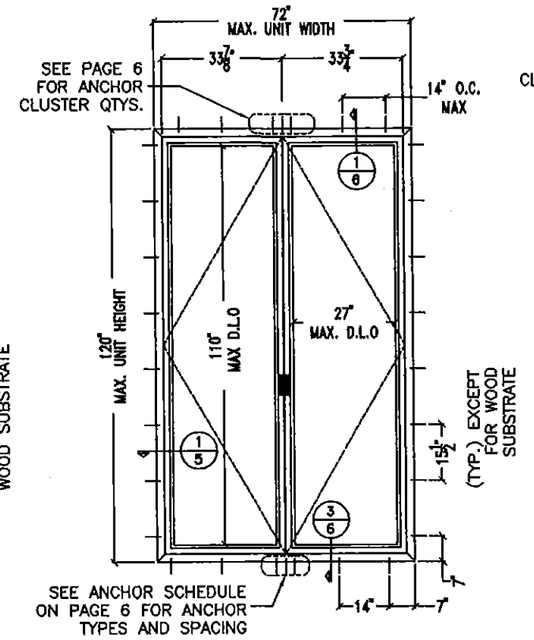

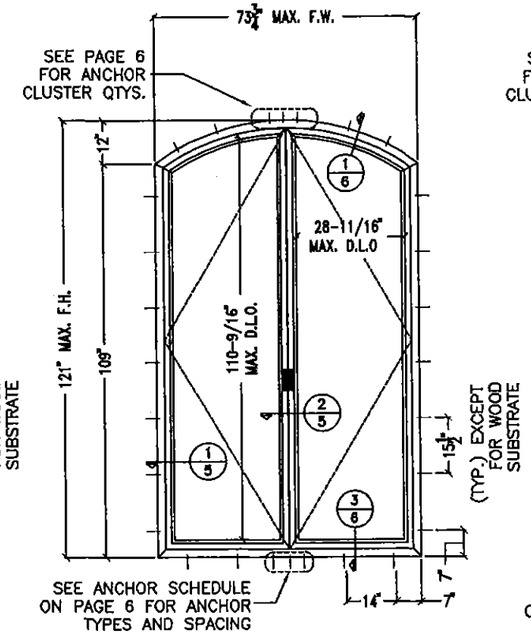

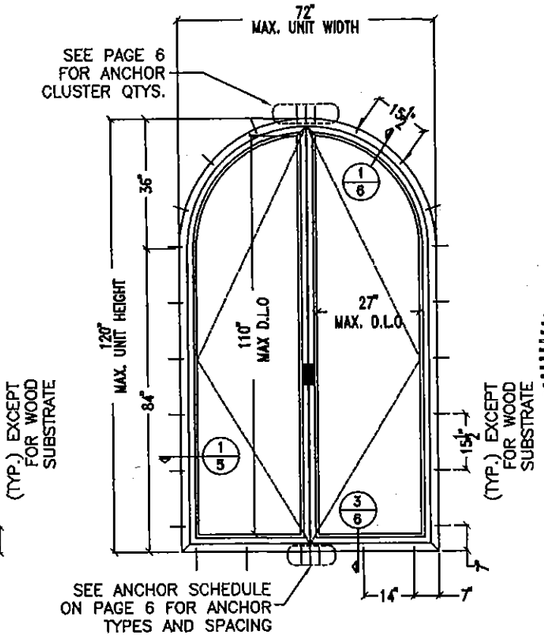

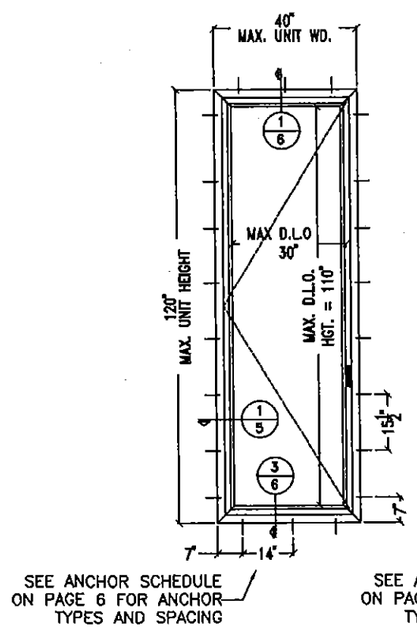

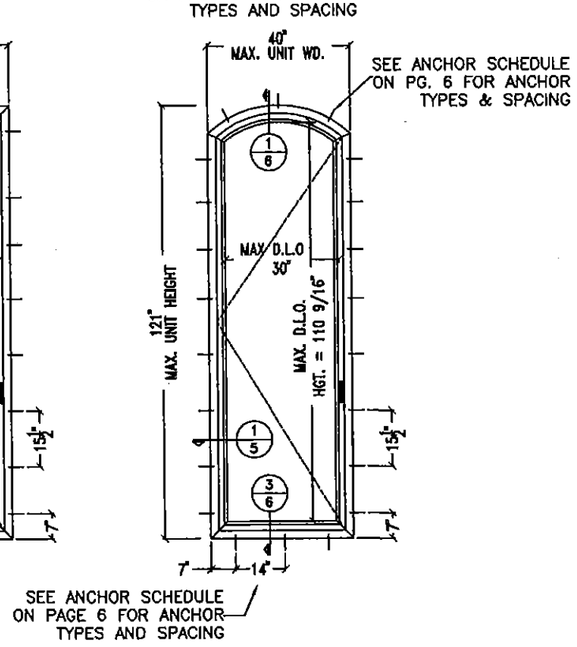

NOTES:

1. THIS SYSTEM HAS BEEN DESIGNED TO COMPLY WITH THE REQUIREMENTS OF THE HIGH VELOCITY HURRICANE ZONE AS DESCRIBED IN THE "2010 FLORIDA BULDING CODE"
2. THIS WINDOW SYSTEM HAS BEEN TESTED, ENGINEERED AND APPROVED FOR DESIGN PRESSURES NOT TO EXCEED THOSE SHOWN IN SCHEDULE.
3. BUCK, OPENINGS & BUCK FASTENERS MUST BE DESIGNED & INSTALLED TO WITHSTAND WIND LOADS FOR EACH APPLICATION. THE DESIGN & ENGINEERING OF BUCKS SHALL BE PROVIDED BY "THE ENGINEER OF RECORD"
4. BUCK FASTENERS MAY NOT EXCEED 16" O.C. SPACING AROUND OPENINGS.
5. THE SYSTEM SHOWN HEREIN WAS TESTED FOR WATER, AIR, IMPACT, CYCLIC & UNIFORM STATIC AIR PRESSURE TESTING IN CONFORMANCE WITH DADE COUNTY PROTOCOLS TAS-201, 202 & 203.
6. ONE-THIRD INCREASE IN ALLOWABLE MATERIAL STRESS LIMITS FOR SHORT DURATION WIND LOAD NOT USED IN THE DESIGN CALCULATIONS. EXCEPT 1.6 WINDLOAD FACTOR FOR WOOD.

SEE PAGE 4 FOR ALLOWABLE WIND PRESSURES AND GLASS CHART.

PRODUCT REVISED
as complying with the Florida Building Code
Acceptance No 13-1203.06
Expiration Date Feb. 27, 2018
By Manuel Perez
Miami-Dade Product Control

LA FINESTRA, L.C.
ITALIAN WINDOWS & DOORS
2790 Northwest 104th Court
Miami, FL 33172-2175
Phone (305) 599-8093
Fax (305) 592-4671

BROWARD COUNTY ENGINEERING, INC.
STRUCTURAL ENGINEERING SERVICES
5449 N.W. 33RD AVENUE SUITE 100
FORT LAUDERDALE, FL 33309
WILLIAM D. COOK P.E. #43904
JUL 2 3 2014
STATE OF FLORIDA PROFESSIONAL ENGINEER

PRODUCT: EKU-53 IMPACT WINDOWS

REVISIONS

No.	DATE	BY	DESCRIPTION
2	10/15/13	MG	ADDED ARCH TOP
3	12/16/13	MG	ADDED ALTERNATE EXTRUSIONS
4	04/09/14	MG	REVIEW COMMENTS
5	07/23/14	MG	REVIEW COMMENTS

DATE: 07/18/2013
SCALE: 3/8" = 1'-0"
DWG. BY: LA FIN
CHK. BY:

DRAWING No.: FN-EKU53

SHEET: 1 OF 13

ALTERNATE CONFIGURATIONS

UNITS MAY BE INSTALLED WITH A MIAMI-DADE COUNTY
APPROVED MULLION BETWEEN EACH WINDOW AND/OR
FRAME. THE LOWEST DESIGN PRESSURE FOR THE WINDOW, TRANSOM OR MULLION WILL CONTROL

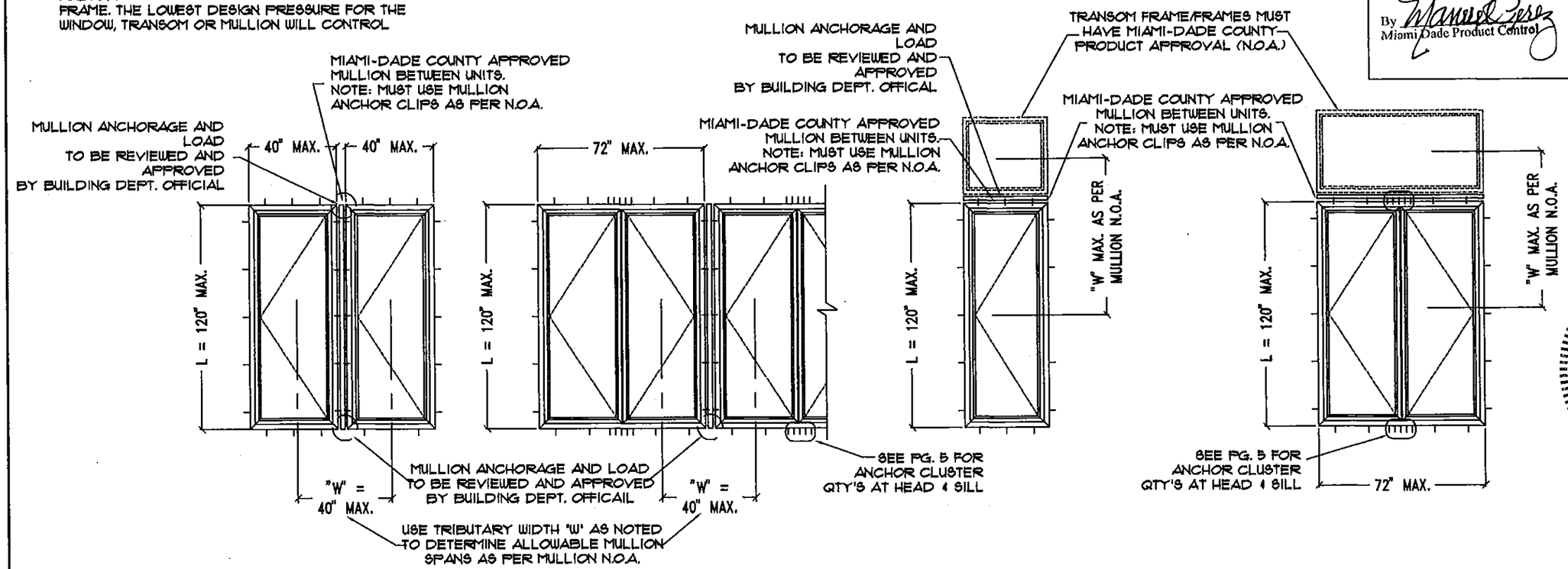

PRODUCT REVISED
as complying with the Florida Building Code
Acceptance No 13-1203.06
Expiration Date Feb. 24, 2018
By Manuel Perez
Miami Dade Product Control

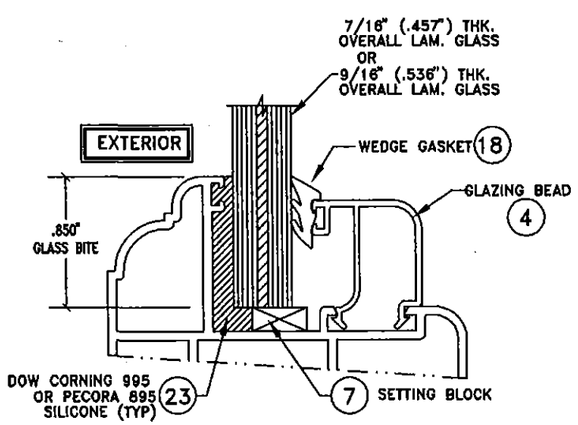

GLAZING DETAIL
GL-1, GL-3 THRU GL-8 (LAMINATED)

SCALE: N.T.S.

NOTE: SEE ALLOWABLE D.L.O. SCHEDULE ON PG. 4 FOR MAX. DESIGN PRESSURES

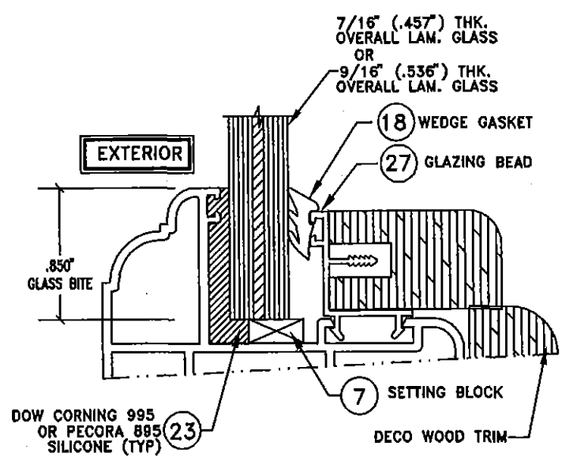

"OPTIONAL"
GLAZING DETAIL GL-1 (WITH WOOD TRIM)

SCALE: N.T.S.
NOTE: MAX. DESIGN PRESSURE = +80, -80 P.S.F.

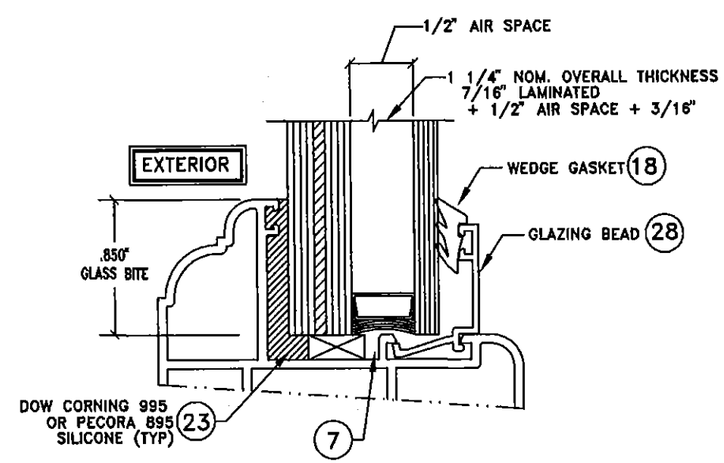

GLAZING DETAIL GL-2(LAMINATED/INSULATED)

SCALE: N.T.S.
NOTE: MAX. DESIGN PRESSURE = +80, -80 P.S.F.

LA FINESTRA, L.C.
ITALIAN WINDOWS & DOORS
2790 Northwest 104th Court
Miami, FL 33172-2175
Phone (305) 599-8093
Fax (305) 592-4671

BROWLEY-COOK ENGINEERING, INC.
STRUCTURAL ENGINEERING SERVICES
5440 N.W. 33RD AVENUE SUITE 104
FORT LAUDERDALE, FL 33309
WILLIAM D. COOK FL. P.E. #43804
JUL 05 2014
WILLIAM D. COOK
STATE OF FLORIDA
PROFESSIONAL ENGINEER

PRODUCT: EKU-53 IMPACT WINDOWS

REVISIONS

No.	DATE	BY	DESCRIPTION
2	10/15/13	MG	ADDED ARCH TOP
3	12/16/13	MG	ADDED ALTERNATE EXTRUSIONS
4	04/09/14	MG	REVIEW COMMENTS
5	07/23/14	MG	REVIEW COMMENTS

DATE: 07/18/2013
SCALE: 3/8" = 1'-0"
DWG. BY: LA FIN
CHK. BY:

DRAWING No.: FN-EKU53

SHEET: 2 OF 13

SERIES EKU-53 ALUMINUM CASEMENT WINDOWS
(UNIT ELEVATIONS VIEWED FROM EXTERIOR)

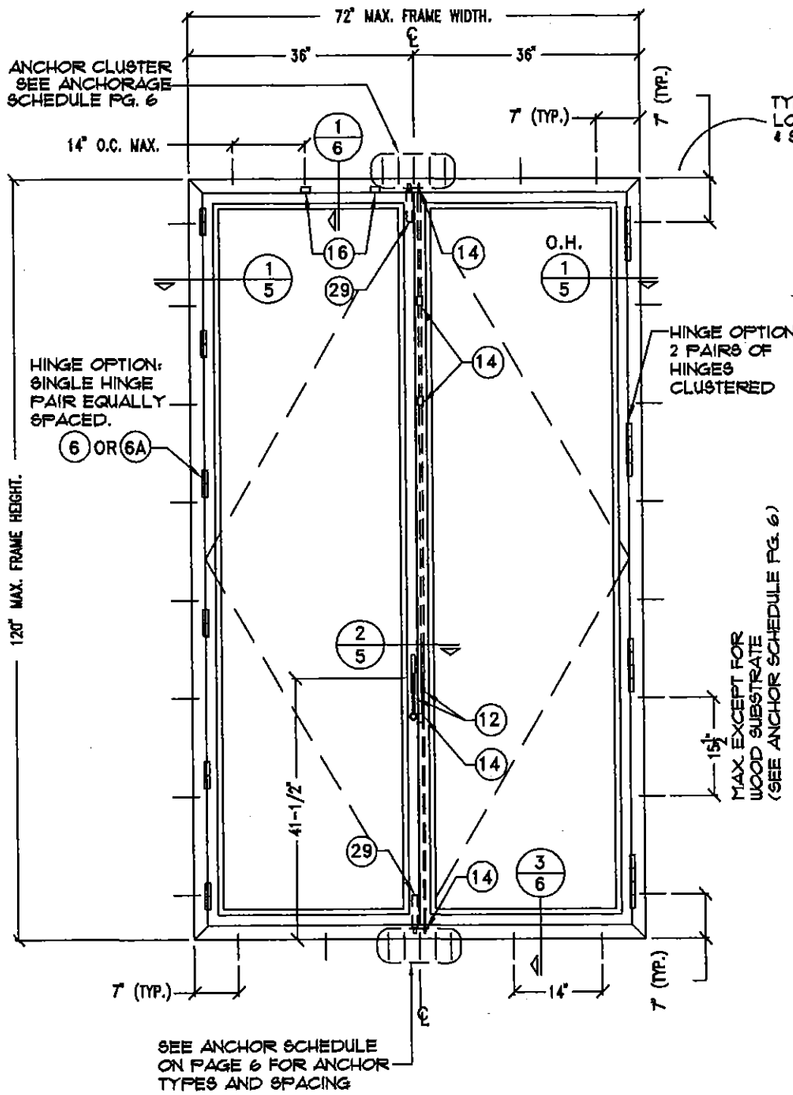

NOTE: FOR ODD NUMBER OF ANCHORS IN CLUSTER, INSTALL ONE ANCHOR IN CENTER OF INTERLOCK.

HARDWARE
12 OPERATING HANDLE
14 5-POINT LOCKING SYSTEM
16 MUSHROOM HEAD AND KEEPERS
29 FLUSH BOLT

HINGE OPTIONS PER LEAF:
6 OR 6A RECTANGULAR DOOR 120" TALL: 6 INDIVIDUAL PAIRS OR (4) CLUSTERS OF 2 PAIRS.
ARCH TOP DOOR 120" TALL: 5 INDIVIDUAL PAIRS OR (4) CLUSTERS OF 2 PAIRS.
RECTANGULAR DOOR 96" TALL: 4 INDIVIDUAL PAIRS OR (3) CLUSTERS OF 2 PAIRS.
ARCH TOP DOOR 96" TALL: 4 INDIVIDUAL PAIRS OR (3) CLUSTERS OF 2 PAIRS.

GLAZING
SEE ALLOWABLE GLASS D.L.O. CHART ON PAGE 4

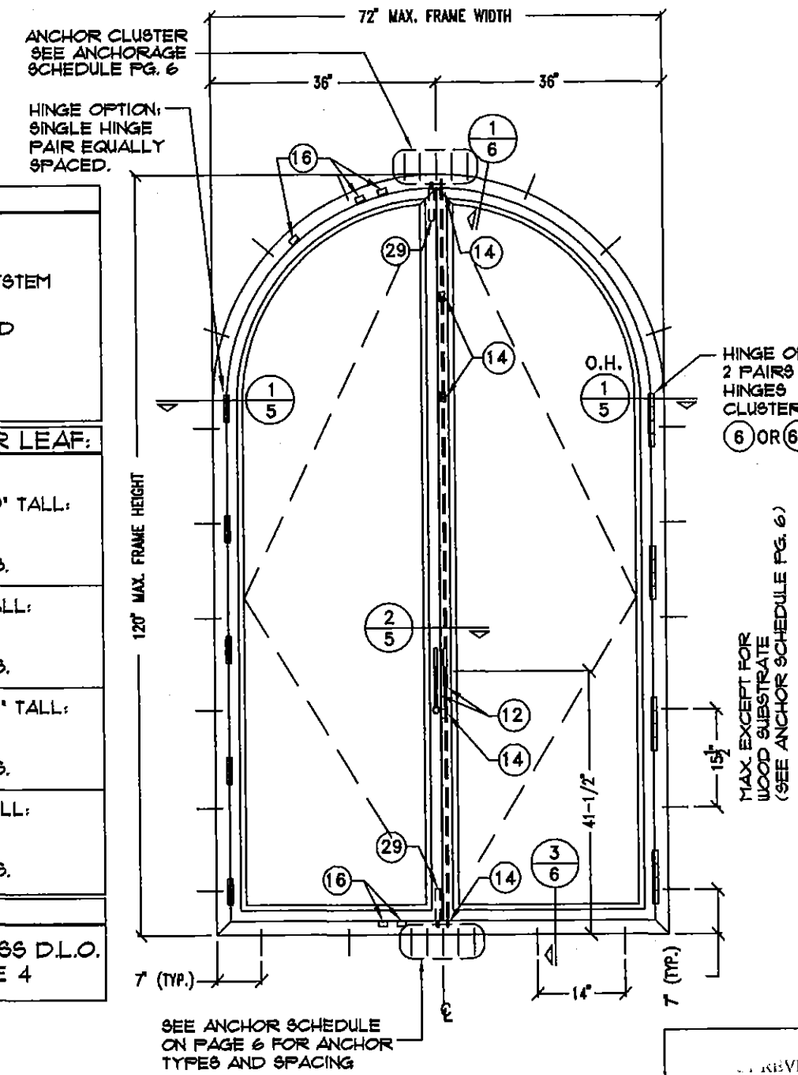

NOTE: FOR ODD NUMBER OF ANCHORS IN CLUSTER, INSTALL ONE ANCHOR IN CENTER OF INTERLOCK.

REVISED
complying with the Florida
Building Code
Acceptance No 13-1203.06
Expiration Date Feb 27, 2018
By Manuel Perez
Miami-Dade Product Control

LA FINESTRA, L.C.
ITALIAN WINDOWS & DOORS
2790 Northwest 104th Court
Miami, FL 33172-2175
Phone (305) 599-8093
Fax (305) 592-4671

BROWARD COOK ENGINEERING, INC.
STRUCTURAL ENGINEERING SERVICES
2340 N.W. 33RD AVENUE SUITE 100
FORT LAUDERDALE, FL 33308
WILLIAM D. COOK, PE LICENSE #43904
STATE OF FLORIDA
WILLIAM D. COOK
LICENSE
JUL 28 2014
PROFESSIONAL ENGINEER

PRODUCT: EKU-53 IMPACT WINDOWS

REVISIONS

No.	DATE	BY	DESCRIPTION
2	10/15/13	MG	ADDED ARCH TOP
3	12/16/13	MG	ADDED ALTERNATE EXTRUSIONS
4	04/09/14	MG	REVIEW COMMENTS
5	07/23/14	MG	REVIEW COMMENTS

DATE: 07/18/2013
SCALE: 1/2" = 1'-0"
DWG. BY: LA FIN
CHK. BY:
DRAWING No.: FN-EKU53
SHEET: 3 OF 13

WINDOW SIZE CHART
MAX. ALLOWABLE DESIGN LOADS (P.S.F.)
FOR IMPACT WINDOWS

D.L.O. SIZE		GLASS TYPE GL-1		GLASS TYPE GL-2		GLASS TYPE GL-3		GLASS TYPE GL-4		GLASS TYPE GL-5		GLASS TYPE GL-6		GLASS TYPE GL-7		GLASS TYPE GL-8	
WIDTH (W)	HEIGHT (L)	EXT(+)	EXT(−)	EXT(+)	EXT(−)	EXT(+)	EXT(−)	EXT(+)	EXT(−)	EXT(+)	EXT(−)	EXT(+)	EXT(−)	EXT(+)	EXT(−)	EXT(+)	EXT(−)
21 3/4"	70 3/4"	110	110	80	80	110	110	110	110	110	110	110	110	80	80	80	80
25 3/4"		110	110	80	80	110	110	110	110			110	110	80	80	80	80
27 1/2"		110	110	80	80	110	110	90	90			110	110	80	80	80	80
28 15/16"		110	110	80	80			90	90			110	110	80	80	80	80
30"		110	110	80	80			90	90			110	110	80	80	80	80
30 3/4"								90	90			110	110	80	80	80	80
42 3/8"								90	90					80	80	80	80
65 3/4"														80	80	80	80
21 3/4"	80"	110	110	80	80	110	110	110	110	110	110						
25 3/4"		110	110	80	80	110	110	110	110								
27 1/2"		110	110	80	80	110	110	90	90								
28 15/16"		110	110	80	80			90	90								
30"		110	110	80	80			90	90								
42 3/8"								90	90								
21 3/4"	85"	110	110	80	80	110	110	110	110	110	110						
25 3/4"		110	110	80	80	110	110	110	110								
27 1/2"		110	110	80	80	110	110	90	90								
28 15/16"		110	110	80	80	98.9	98.9	90	90								
30"		110	110	80	80	98.9	98.9	90	90								
30 3/4"		110	110			98.9	98.9	90	90								
42 3/8"						98.9	98.9	90	90								
21 3/4"	87"	110	110	80	80			90	90								
27 1/2"		110	110	80	80			90	90								
28 15/16"		110	110	80	80			90	90								
30 3/4"		110	110	80	80			90	90								
42 3/8"								90	90								
21 3/4"	90"	80	80	80	80												
27 1/2"		80	80	80	80												
28 15/16"		80	80	80	80												
21 3/4"	96"	80	80	80	80												
27 1/2"		80	80	80	80												
28 15/16"		80	80	80	80												
21 3/4"	104"	80	80	80	80												
27 1/2"		80	80	80	80												
28 15/16"		80	80	80	80												
21 3/4"	108"	80	80	80	80												
27 1/2"		80	80	80	80												
28 15/16"		80	80	80	80												
21 3/4"	110 1/2"	80	80	80	80												
27 1/2"		80	80	80	80												
28 15/16"		80	80	80	80												

X = NOT ALLOWABLE

MAX. PANEL FRAME WIDTH
D.L.O. +9" FOR DIE #16012 (#2)
D.L.O. + 7.62" for die #16013 (#2A)

MAX. PANEL FRAME HEIGHT
D.L.O. +9" FOR DIE #16012 (#2)
D.L.O. + 7.62" for die #16013 (#2A)

WATER INFILTRATION TEST PRESSURE

-WINDOWS UP TO 96" TALL : 16.5 PSF

-WINDOWS UP TO 120" TALL : 12 PSF
WITH STANDARD THRESHOLD

GLASS SCHEDULE
LARGE MISSILE IMPACT RESISTANT

GL-1 = 7/16" (.458") LAMINATED
3/16" (.182") H.S. –
.090" P.V.B. BUTACITE BY DUPONT INTERLAYER –
3/16" H.S.

GL-2 = 1-1/4" (1.136") INSULATED/LAMINATED
3/16" (.182") H.S. –
.090" P.V.B. BUTACITE BY DUPONT INTERLAYER –
3/16" H.S. –
1/2" AIR SPACE –
3/16" TEMPERED

GL-3 = 7/16" (.458") LAMINATED
3/16" (.182") ANN.–
.090" P.V.B. SAFLEX BY EASTMAN CHEMICAL COMPANY INTERLAYER –
3/16" ANN.

GL-4 = 7/16" (.454") LAMINATED
3/16" (.182") H.S. –
.090" P.V.B. SAFLEX BY EASTMAN CHEMICAL COMPANY INTERLAYER –
3/16" H.S.

GL-5 = 7/16" (.454") LAMINATED
3/16" (.182") ANN. –
.090" P.V.B. BUTACITE BY DUPONT INTERLAYER –
3/16" ANN.

GL-6 = 9/16" (.536") LAMINATED
1/4" (.223") H.S. –
.090" P.V.B. BUTACITE BY DUPONT INTERLAYER –
1/4" H.S.

GL-7 = 9/16" (.536") LAMINATED
1/4" (.223") H.S. –
.090" SENTRY GLASS BY DUPONT INTERLAYER –
1/4" H.S.

GL-8 = 7/16" (.454") LAMINATED
3/16" (.182") H.S. –
.090" SENTRY GLASS BY DUPONT INTERLAYER –
3/16" H.S.

TESTED GLASS TYPES (MAX. D.L.O SIZE & PRESSURES)

GLASS TYPE	MAXIMUM D.L.O.	MAX DESIGN PRESSURE
GL-1	30" W x 87" H 27" W x 110" H	+110.0/-110.0 PSF +80.0/-80.0 PSF
GL-2	27 1/2" W x 110 1/2" H 28 15/16" W x 110" H	+80.0/-80.0 PSF +80.0/-80.0 PSF
GL-3	27 1/2" W x 85" H 30" W x 85" H	+110.0/-110.0 PSF +98.9/-98.9 PSF
GL-4	30" W x 85" H 28 15/16" W x 110" H	+110.0/-110.0 PSF +80.0/-80.0 PSF
GL-5	21 3/4" W x 85" H	+110.0/-110.0 PSF
GL-6	30 3/4" W x 70 3/4" H	+100.0/-110.0 PSF
GL-7	65 3/4" W x 70 3/4" H	+80.0/-80.0 PSF
GL-8	65 3/4" W x 70 3/4" H	+80.0/-80.0 PSF

PRODUCT REVISED
as complying with the Florida Building Code
Acceptance No 13-1203.06
Expiration Date ~~Feb 27, 2018~~
By Manuel Perez
Miami Date Product Control

LA FINESTRA, L.C.
ITALIAN WINDOWS & DOORS
2790 Northwest 104th Court
Miami, FL 33172-2175
Phone (305) 599-8093
Fax (305) 592-4671

BROMLEY-COOK ENGINEERING, INC.
STRUCTURAL ENGINEERING SERVICES
5449 NW. 33RD AVENUE SUITE 106
FORT LAUDERDALE, FL 33309
WILLIAM D. COOK JR. P.E. #43984
JUL 23 2014
STATE OF FLORIDA PROFESSIONAL ENGINEER

PRODUCT:
EKU-53
IMPACT
WINDOWS

REVISIONS

No.	DATE	BY	DESCRIPTION
2	10/15/13	MG	ADDED ARCH TOP
3	12/16/13	MG	ADDED ALTERNATE EXTRUSIONS
4	04/09/14	MG	REVIEW COMMENTS
5	07/23/14	MG	REVIEW COMMENTS

DATE: 07/18/2013
SCALE: 1/2" = 1'-0"
DWG. BY: LA FIN
CHK. BY:

DRAWING No.:
FN-EKU53

SHEET: 4 OF 13

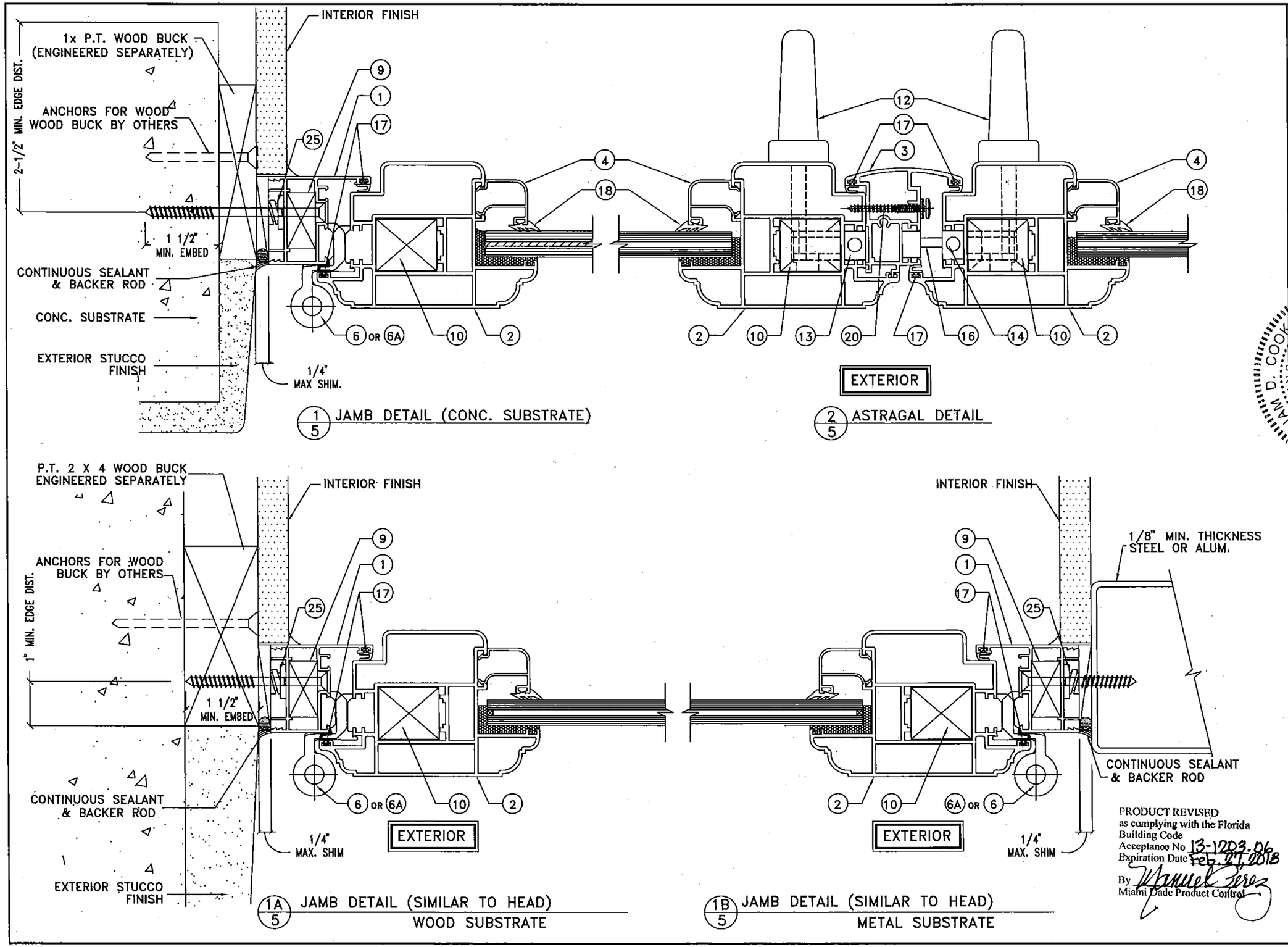

PRODUCT REVISED
as complying with the Florida Building Code
Acceptance No 13-1203.06
Expiration Date Feb. 27, 2018
By Manuel Perez
Miami Dade Product Control

LA FINESTRA, L.C.
ITALIAN WINDOWS & DOORS
2790 Northwest 104th Court
Miami, FL 33172-2175
Phone (305) 599-8093
Fax (305) 592-4671

BROWLEY-COOK ENGINEERING, INC.
STRUCTURAL ENGINEERING SERVICES
5440 N.W. 33RD AVENUE SUITE 100
FORT LAUDERDALE, FL 33309
WILLIAM D. COOK FL P.E. #42994
STATE OF FLORIDA
WILLIAM D. COOK
LICENSE
PROFESSIONAL ENGINEER
JULY 28 2014

PRODUCT: EKU-53 IMPACT WINDOWS

REVISIONS

No.	DATE	BY	DESCRIPTION
2	10/15/13	MG	ADDED ARCH TOP
3	12/16/13	MG	ADDED ALTERNATE EXTRUSIONS
4	04/09/14	MG	REVIEW COMMENTS
5	07/23/14	MG	REVIEW COMMENTS

DATE: 07/18/2013
SCALE: AS NOTED
DWG. BY: LA FIN
CHK. BY:

DRAWING No.: FN-EKU53

SHEET: 5 OF 13

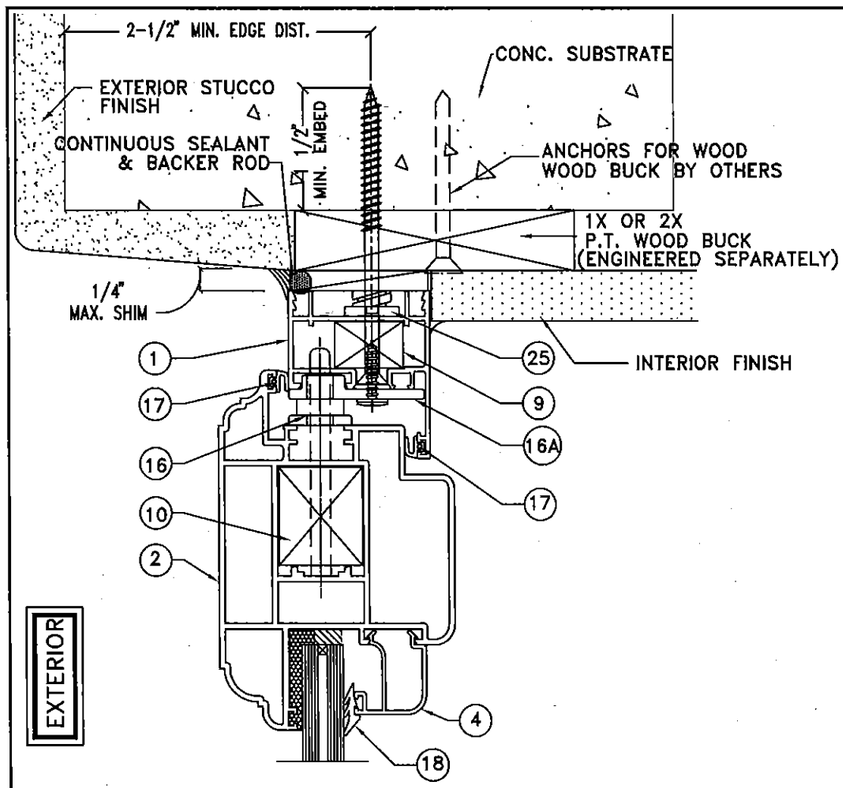

1/6 HEAD DETAIL (CONC. SUBSTRATE)

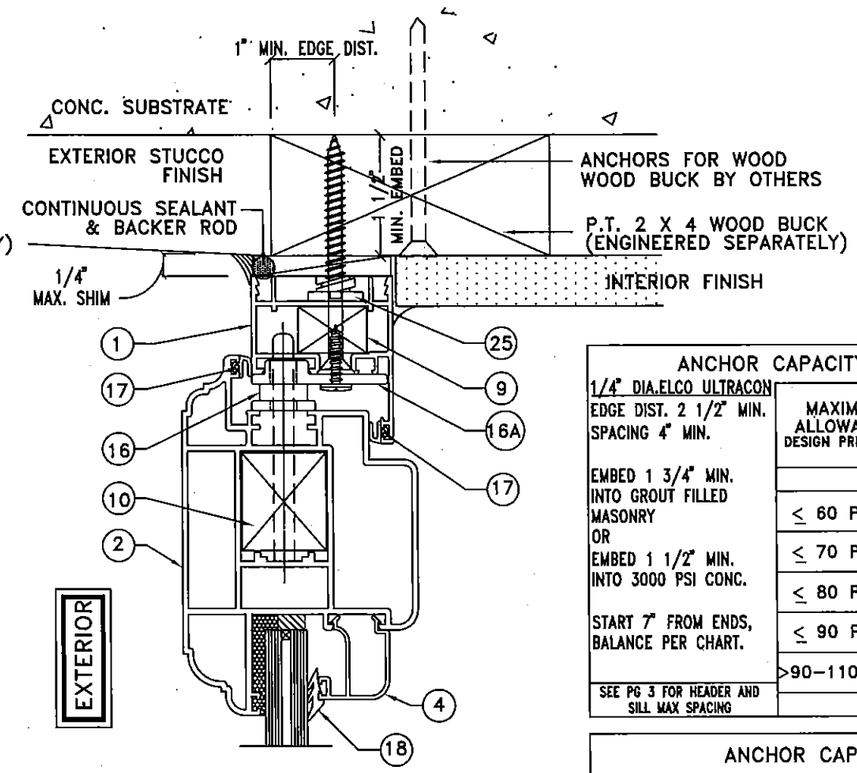

3/6 HEAD DETAIL (WOOD SUBSTRATE)

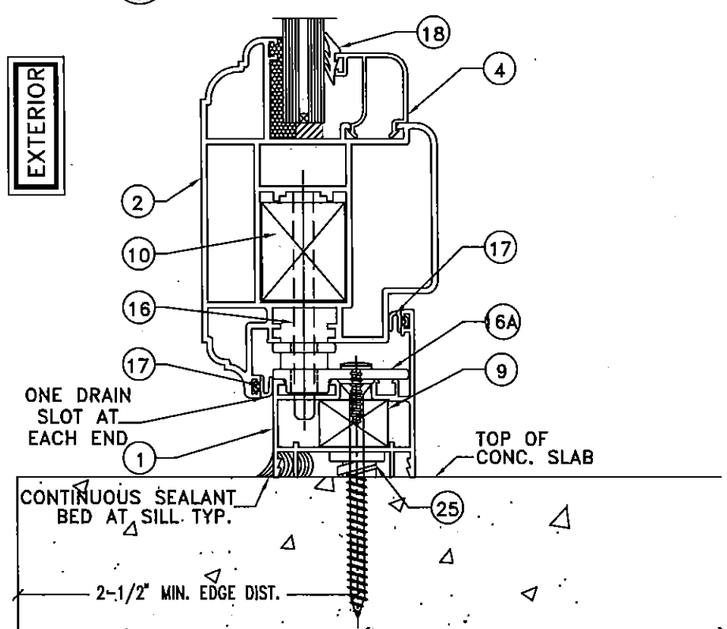

2/6 SILL DETAIL (STANDARD THRESHOLD)

PRODUCT REVISED
as complying with the Florida Building Code
Acceptance No 13-1203.06
Expiration Date Feb.27, 2018
By Manuel Perez
Miami Dade Product Control

ANCHOR CAPACITY CHART (CONCRETE SUBSTRATE)

1/4" DIA.ELCO ULTRACON EDGE DIST. 2 1/2" MIN. SPACING 4" MIN.	MAXIMUM ALLOWABLE DESIGN PRESSURE	ANCHORS AT JAMBS	QTY. ANCHORS AT HEAD OR SILL INTERLOCK (W/ FRAME INSERT)	
			UP TO 96"	UP TO 120"
EMBED 1 3/4" MIN. INTO GROUT FILLED MASONRY OR EMBED 1 1/2" MIN. INTO 3000 PSI CONC.	≤ 60 P.S.F.	15-1/2"C/C	2	3
	≤ 70 P.S.F.	15-1/2"C/C	2	3
	≤ 80 P.S.F.	15-1/2"C/C	3	3
START 7" FROM ENDS, BALANCE PER CHART.	≤ 90 P.S.F.	15-1/2"C/C	3	N/A
	>90-110 P.S.F	15-1/2"C/C	3	N/A
SEE PG 3 FOR HEADER AND SILL MAX SPACING			SPACED 4" APART	

ANCHOR CAPACITY CHART (STEEL SUBSTRATE)

#14 P.H.S.M.S. OR #14 SELF DRILLING INTO 1/8" THK. ASTM A36	MAXIMUM ALLOWABLE DESIGN PRESSURE	ANCHORS AT JAMBS	QTY. ANCHORS AT HEAD OR SILL INTERLOCK (W/ FRAME INSERT)	
			UP TO 96"	UP TO 120"
	≤ 60 P.S.F.	15-1/2"C/C	2	3
	≤ 70 P.S.F.	15-1/2"C/C	2	3
START 7" FROM ENDS, BALANCE PER CHART.	≤ 80 P.S.F.	15-1/2"C/C	3	3
	≤ 90 P.S.F.	15-1/2"C/C	3	N/A
SEE PG 3 FOR HEADER AND SILL MAX SPACING	>90-110 P.S.F	15-1/2"C/C	3	N/A
			SPACED 2 1/2" APART	

ANCHOR CAPACITY CHART (WOOD SUBSTRATE)

#14 P.H.S.M.S. OR #14 WOOD SCREW EMBED 1 1/2" MIN. INTO NO. 2 SYP.	MAXIMUM ALLOWABLE DESIGN PRESSURE	ANCHORS AT JAMBS	QTY. ANCHORS AT HEAD OR SILL INTERLOCK (W/ FRAME INSERT)	
			UP TO 96"	UP TO 120"
	≤ 60 P.S.F.	12" C/C	4	5
	≤ 70 P.S.F.	12" C/C	4	5
START 7" FROM ENDS, BALANCE PER CHART.	≤ 80 P.S.F.	12" C/C	5	6
	≤ 90 P.S.F.	12" C/C	5	N/A
SEE PG 3 FOR HEADER AND SILL MAX SPACING	>90-110 P.S.F	12" C/C	6	N/A
			SPACED 2 1/2" APART	

LA FINESTRA, L.C.
ITALIAN WINDOWS & DOORS
2790 Northwest 104th Court
Miami, FL 33172-2175
Phone (305) 599-8093
Fax (305) 592-4671

BROMLEY COOK ENGINEERING, INC.
STRUCTURAL ENGINEERING SERVICES
540 N.W. 165RD AVENUE SUITE 200
MIAMI, FORT LAUDERDALE, FL 33309
WILLIAM D. COOK FL. REG. #43824
JUL 23 2014
STATE OF FLORIDA PROFESSIONAL ENGINEER

PRODUCT: EKU-53 IMPACT WINDOWS

REVISIONS

No.	DATE	BY	DESCRIPTION
2	10/15/13	MG	ADDED ARCH TOP
3	12/16/13	MG	ADDED ALTERNATE EXTRUSIONS
4	04/09/14	MG	REVIEW COMMENTS
5	07/23/14	MG	REVIEW COMMENTS

DATE: 07/18/2013
SCALE: 3/16" = 1'-0"
DWG. BY: LA FIN
CHK. BY:

DRAWING No.: FN-EKU53

SHEET: 6 OF 13

PROFILE COMBINATIONS

NOTE: PLEASE SEE D.P. LIMITATIONS FOR GLAZING ON SHEET 4

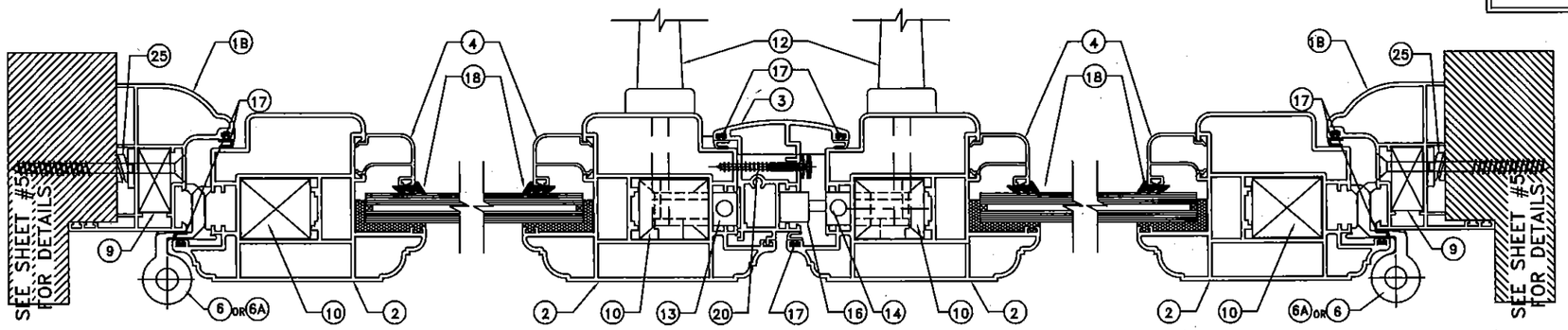

COMBINATION 1

MAXIMUM P.S.F. @ 96" +110.00 −110.00 DESIGN PRESSURE − WATER INFILTRATION TEST PRESSURE = 13.5 PSF
MAXIMUM P.S.F. @ 120" +80.00 −80.00 DESIGN PRESSURE − WATER INFILTRATION TEST PRESSURE = 12.0 PSF

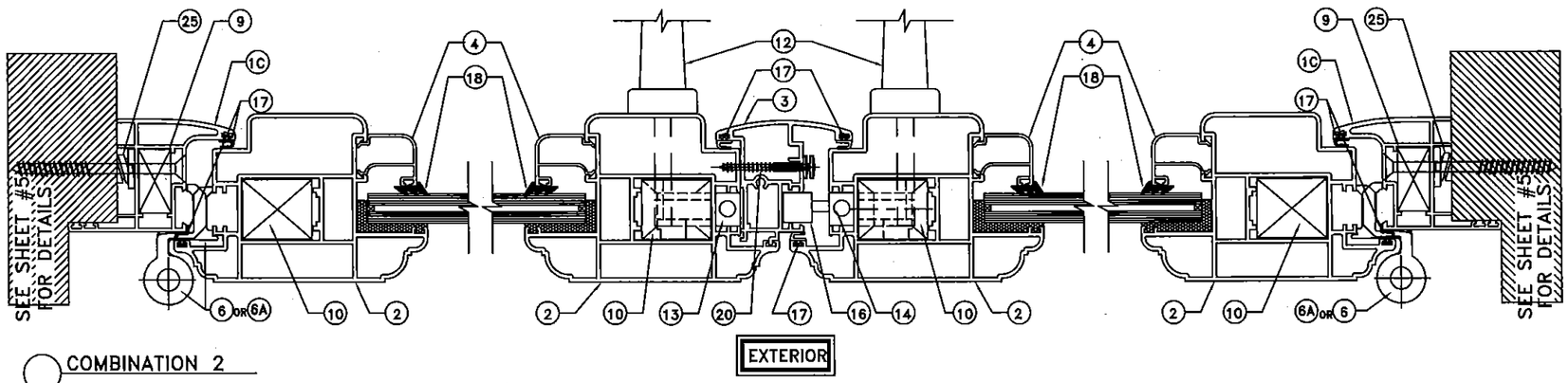

COMBINATION 2

MAXIMUM P.S.F. @ 96" +110.00 −110.00 DESIGN PRESSURE − WATER INFILTRATION TEST PRESSURE = 13.5 PSF
MAXIMUM P.S.F. @ 120" +80.00 −80.00 DESIGN PRESSURE − WATER INFILTRATION TEST PRESSURE = 12.0 PSF

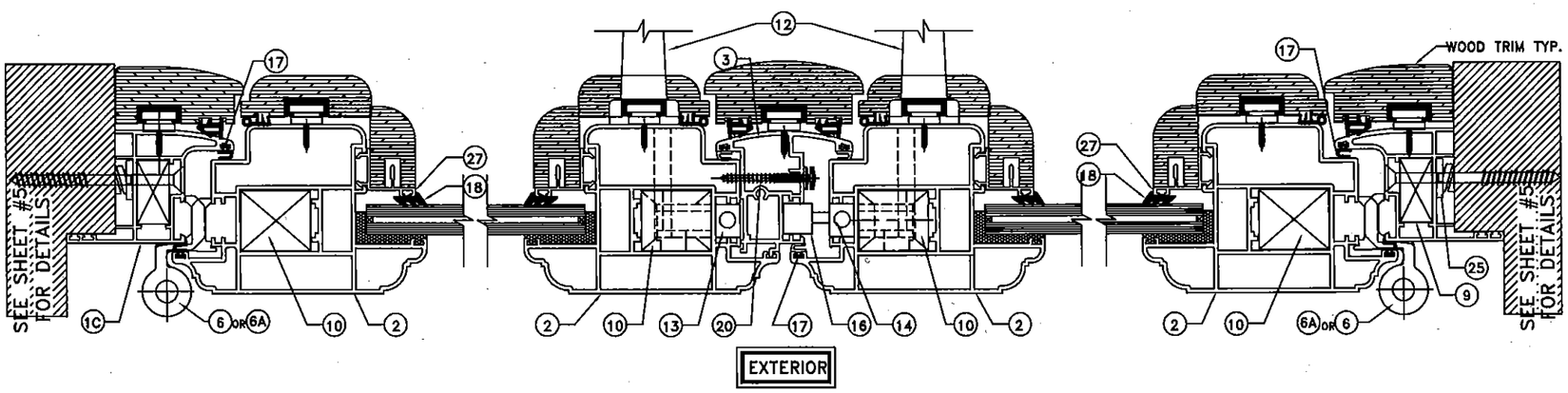

COMBINATION 2 WITH WOOD TRIM

MAXIMUM P.S.F. @ 120" +80.00 −80.00 DESIGN PRESSURE − WATER INFILTRATION TEST PRESSURE = 12.0 PSF

PRODUCT REVISED
as complying with the Florida Building Code
Acceptance No 13-1203.06
Expiration Date Feb. 27, 2018
By Manuel Perez
Miami Dade Product Control

LA FINESTRA, L.C.
ITALIAN WINDOWS & DOORS
2790 Northwest 104th Court
Miami, FL 33172-2175
Phone (305) 599-8093
Fax (305) 592-4671

BROMLEY-COOK ENGINEERING, INC.
STRUCTURAL ENGINEERING SERVICES
5140 N.W. 33RD AVENUE SUITE 100
FORT LAUDERDALE, FL 33309
WILLIAM D. COOK FL. P.E. #43804
JUL 23 2014

PRODUCT:
EKU-53
IMPACT
WINDOWS

REVISIONS

No.	DATE	BY	DESCRIPTION
2	10/15/13	MG	ADDED ARCH TOP
3	12/16/13	MG	ADDED ALTERNATE EXTRUSIONS
4	04/09/14	MG	REVIEW COMMENTS
5	07/23/14	MG	REVIEW COMMENTS

DATE: 07/18/2013
SCALE: AS NOTED
DWG. BY: LA FIN
CHK. BY:

DRAWING No.:
FN-EKU53

SHEET: 7 OF 13

PROFILE COMBINATIONS

NOTE: PLEASE SEE D.P. LIMITATIONS FOR GLAZING ON SHEET 4

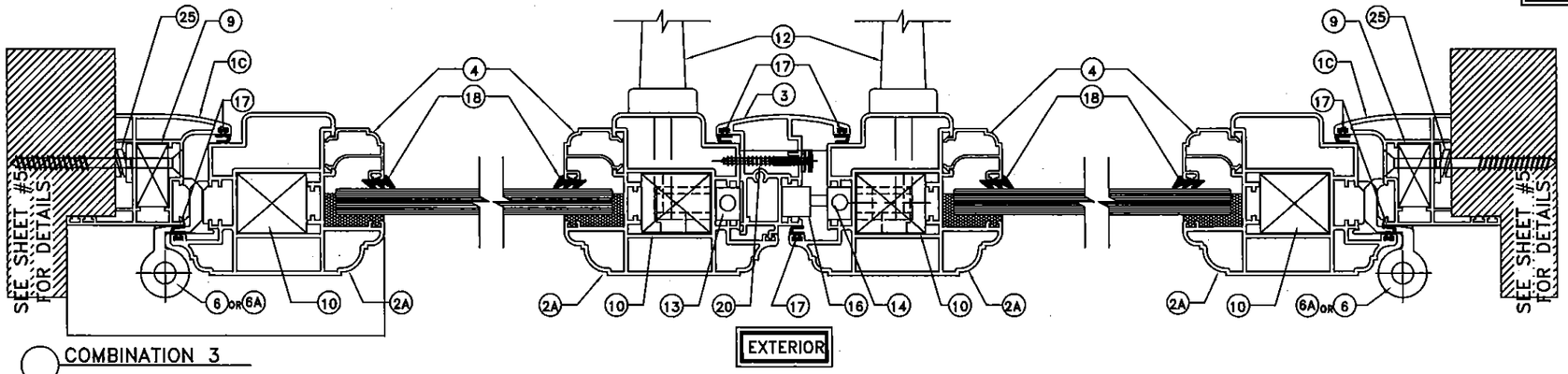

COMBINATION 3

MAXIMUM P.S.F. @ 96" +110.00 −110.00 DESIGN PRESSURE – WATER INFILTRATION TEST PRESSURE = 13.5 PSF
MAXIMUM P.S.F. @ 120" +80.00 −80.00 DESIGN PRESSURE – WATER INFILTRATION TEST PRESSURE = 12.0 PSF

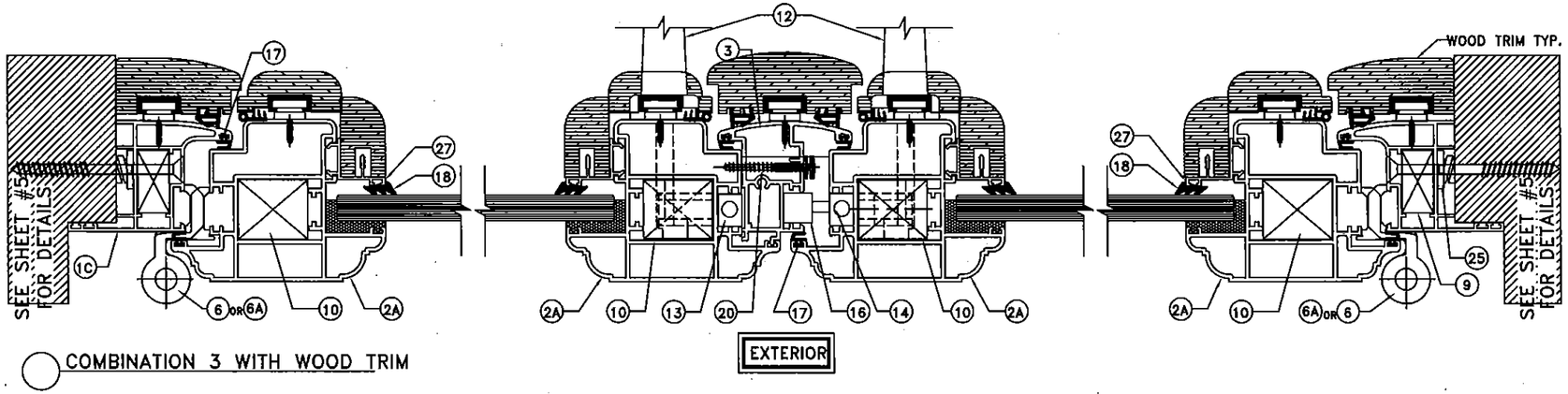

COMBINATION 3 WITH WOOD TRIM

MAXIMUM P.S.F. @ 120" +80.00 −80.00 DESIGN PRESSURE – WATER INFILTRATION TEST PRESSURE = 12.0 PSF

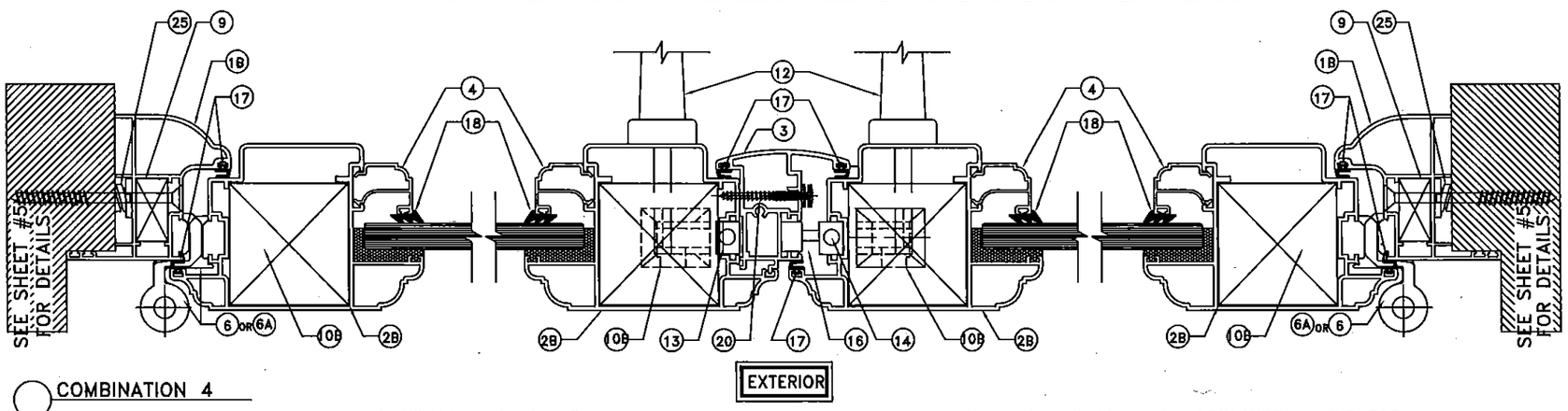

COMBINATION 4

MAXIMUM P.S.F. @ 96" +110.00 −110.00 DESIGN PRESSURE – WATER INFILTRATION TEST PRESSURE = 13.5 PSF
MAXIMUM P.S.F. @ 120" +80.00 −80.00 DESIGN PRESSURE – WATER INFILTRATION TEST PRESSURE = 12.0 PSF

PRODUCT REVISED
as complying with the Florida Building Code
Acceptance No 13-1203.06
Expiration Date Feb. 27, 2018
By Manuel Perez
Miami-Dade Product Control

LA FINESTRA, L.C.
ITALIAN WINDOWS & DOORS
2790 Northwest 104th Court
Miami, FL 33172-2175
Phone (305) 599-8093
Fax (305) 592-4671

BROWLEY-COOK ENGINEERING INC.
STRUCTURAL ENGINEERING SERVICES
5249 N.W. 33RD AVENUE SUITE 101
FORT LAUDERDALE, FL 33309
WILLIAM D. COOK FL P.E. #43804

PRODUCT:
EKU-53 IMPACT WINDOWS

REVISIONS

No.	DATE	BY	DESCRIPTION
2	10/15/13	MG	ADDED ARCH TOP
3	12/16/13	MG	ADDED ALTERNATE EXTRUSIONS
4	04/09/14	MG	REVIEW COMMENTS
5	07/23/14	MG	REVIEW COMMENTS

DATE: 07/18/2013
SCALE: AS NOTED
DWG. BY: LA FIN
CHK. BY:

DRAWING No.: FN-EKU53

SHEET: 8 OF 13

PROFILE COMBINATIONS

NOTE: PLEASE SEE D.P. LIMITATIONS FOR GLAZING ON SHEET 4

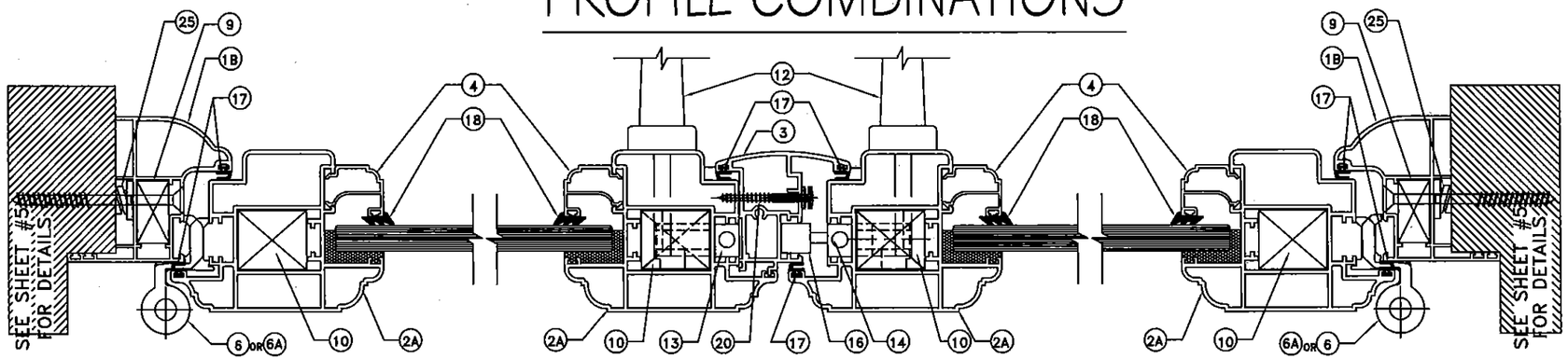

COMBINATION 5

EXTERIOR

MAXIMUM P.S.F. @ 96" +110.00 -110.00 DESIGN PRESSURE - WATER INFILTRATION TEST PRESSURE = 13.5 PSF
MAXIMUM P.S.F. @ 120" +80.00 -80.00 DESIGN PRESSURE - WATER INFILTRATION TEST PRESSURE = 12.0 PSF

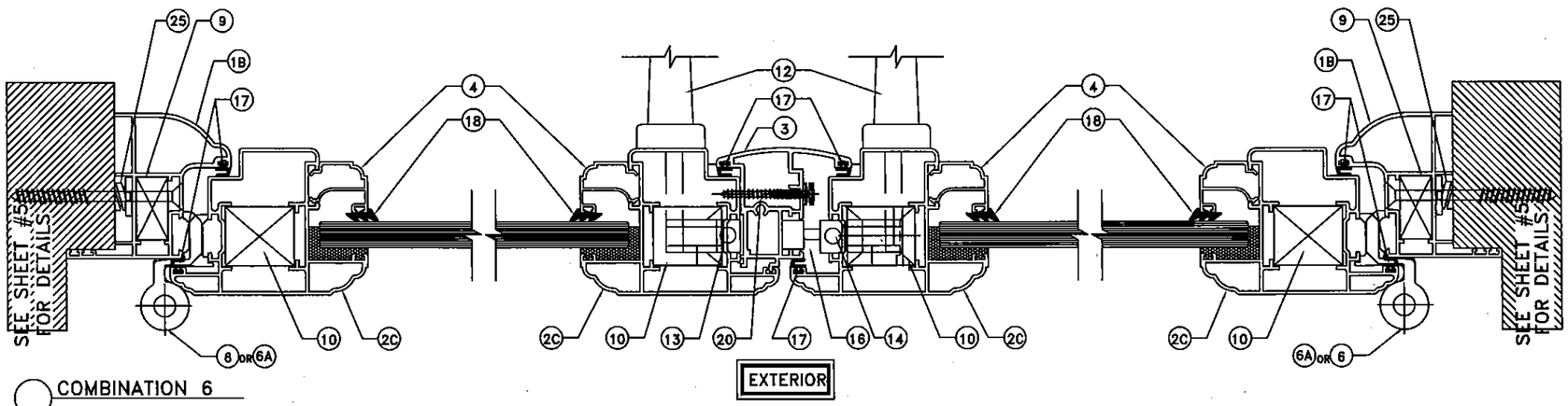

COMBINATION 6

EXTERIOR

MAXIMUM OF 96" H D.P. = +80 / -80 PSF WATER @ 12.0 PSF

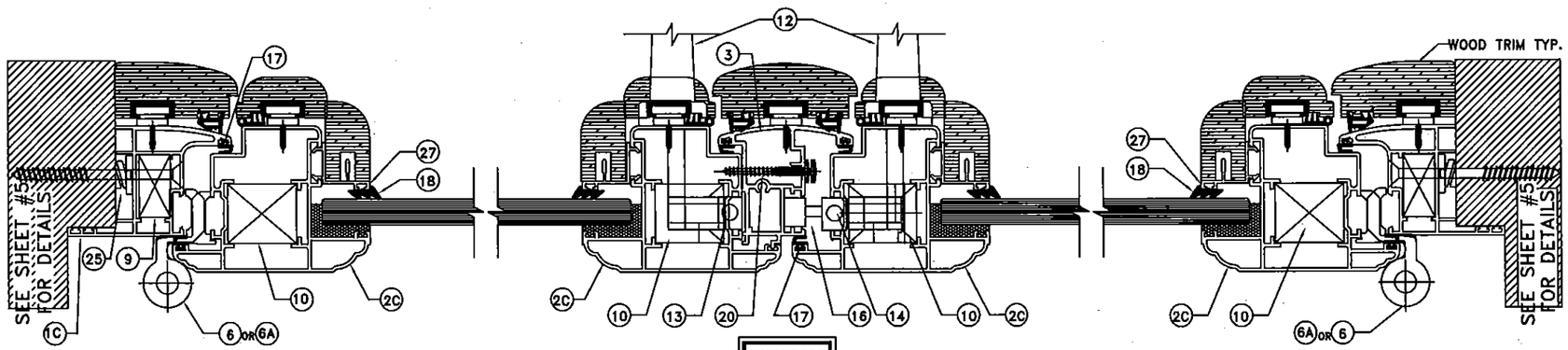

COMBINATION 7 WITH WOOD TRIM

NOTE: WOOD TRIM IS OPTIONAL

EXTERIOR

MAXIMUM OF 96" H D.P. = +80 / -80 PSF WATER @ 12.0 PSF

PRODUCT REVISED
as complying with the Florida Building Code
Acceptance No 13-1203.06
Expiration Date Feb. 27, 2018
By Manuel Perez
Miami Dade Product Control

LA FINESTRA, L.C.
ITALIAN WINDOWS & DOORS
2790 Northwest 104th Court
Miami, FL 33172-2175
Phone (305) 599-8093
Fax (305) 592-4671

BROMLEY-COOK ENGINEERING, INC.
STRUCTURAL ENGINEERING SERVICES
5440 N.W. 33RD AVENUE SUITE 100
FORT LAUDERDALE, FL 33309
WILLIAM D. COOK FL P.E. #43904
JUL 2 3 2014
STATE OF FLORIDA
PROFESSIONAL ENGINEER

PRODUCT:
EKU-53
IMPACT
WINDOWS

REVISIONS

No.	DATE	BY	DESCRIPTION
2	10/15/13	MG	ADDED ARCH TOP
3	12/16/13	MG	ADDED ALTERNATE EXTRUSIONS
4	04/09/14	MG	REVIEW COMMENTS
5	07/23/14	MG	REVIEW COMMENTS

DATE: 07/18/2013
SCALE: AS NOTED
DWG. BY: LA FIN
CHK. BY:

DRAWING No.:
FN-EKU53

SHEET: 9 OF 13

PROFILE COMBINATIONS

NOTE: PLEASE SEE D.P. LIMITATIONS FOR GLAZING ON SHEET 4

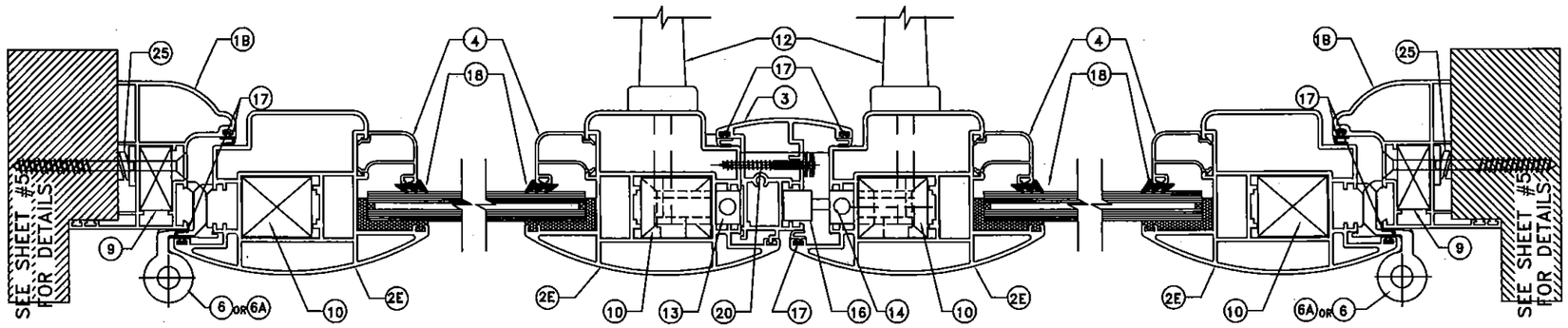

COMBINATION 8 (ALTERNATE EXTRUSION)

MAXIMUM P.S.F. @ 96" +110.00 −110.00 DESIGN PRESSURE − WATER INFILTRATION TEST PRESSURE = 13.5 PSF
MAXIMUM P.S.F. @ 120" +80.00 −80.00 DESIGN PRESSURE − WATER INFILTRATION TEST PRESSURE = 12.0 PSF

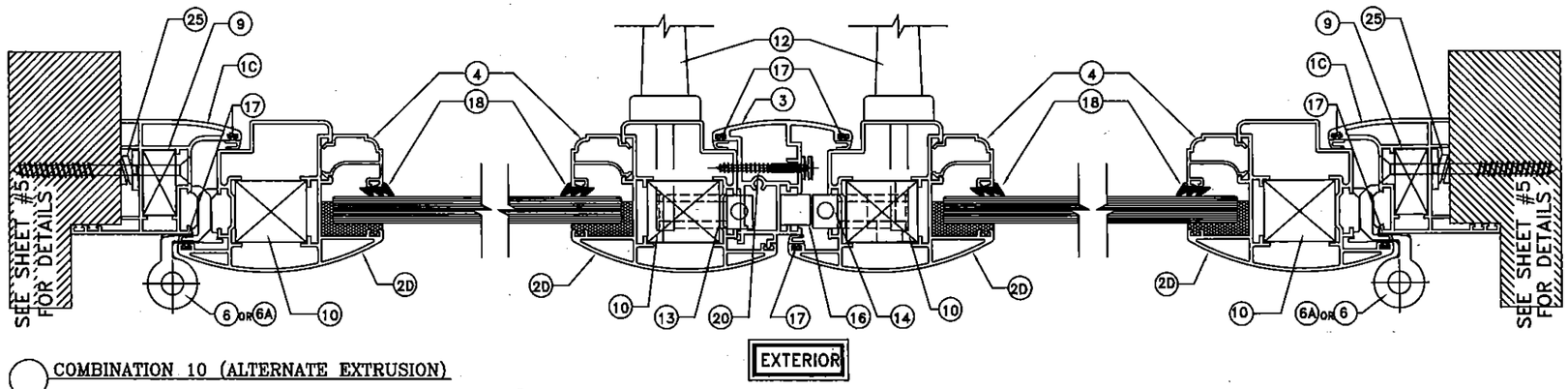

COMBINATION 10 (ALTERNATE EXTRUSION)

MAXIMUM P.S.F. @ 96" +80 −80 DESIGN PRESSURE − WATER INFILTRATION TEST PRESSURE = 12 PSF

PRODUCT REVISED
as complying with the Florida Building Code
Acceptance No 13-1203.06
Expiration Date Feb 27, 2018
By Manuel Perez
Miami Dade Product Control

LA FINESTRA, L.C.
ITALIAN WINDOWS & DOORS
2790 Northwest 104th Court
Miami, FL 33172-2175
Phone (305) 599-8093
Fax (305) 592-4671

BROWLEY-COOK ENGINEERING, INC.
STRUCTURAL ENGINEERING SERVICES
5440 N.W. 33RD AVENUE SUITE 100
FORT LAUDERDALE, FL 33309
WILLIAM D. COOK FL P.E. #43904
JUL 2 2014
STATE OF FLORIDA
PROFESSIONAL ENGINEER

PRODUCT:
EKU-53
IMPACT
WINDOWS

REVISIONS

No.	DATE	BY	DESCRIPTION
2	10/15/13	MG	ADDED ARCH TOP
3	12/16/13	MG	ADDED ALTERNATE EXTRUSIONS
4	04/09/14	MG	REVIEW COMMENTS
5	07/23/14	MG	REVIEW COMMENTS

DATE: 07/18/2013
SCALE: AS NOTED
DWG. BY: LA FIN
CHK. BY:

DRAWING No.: FN-EKU53

SHEET: 10 OF 13

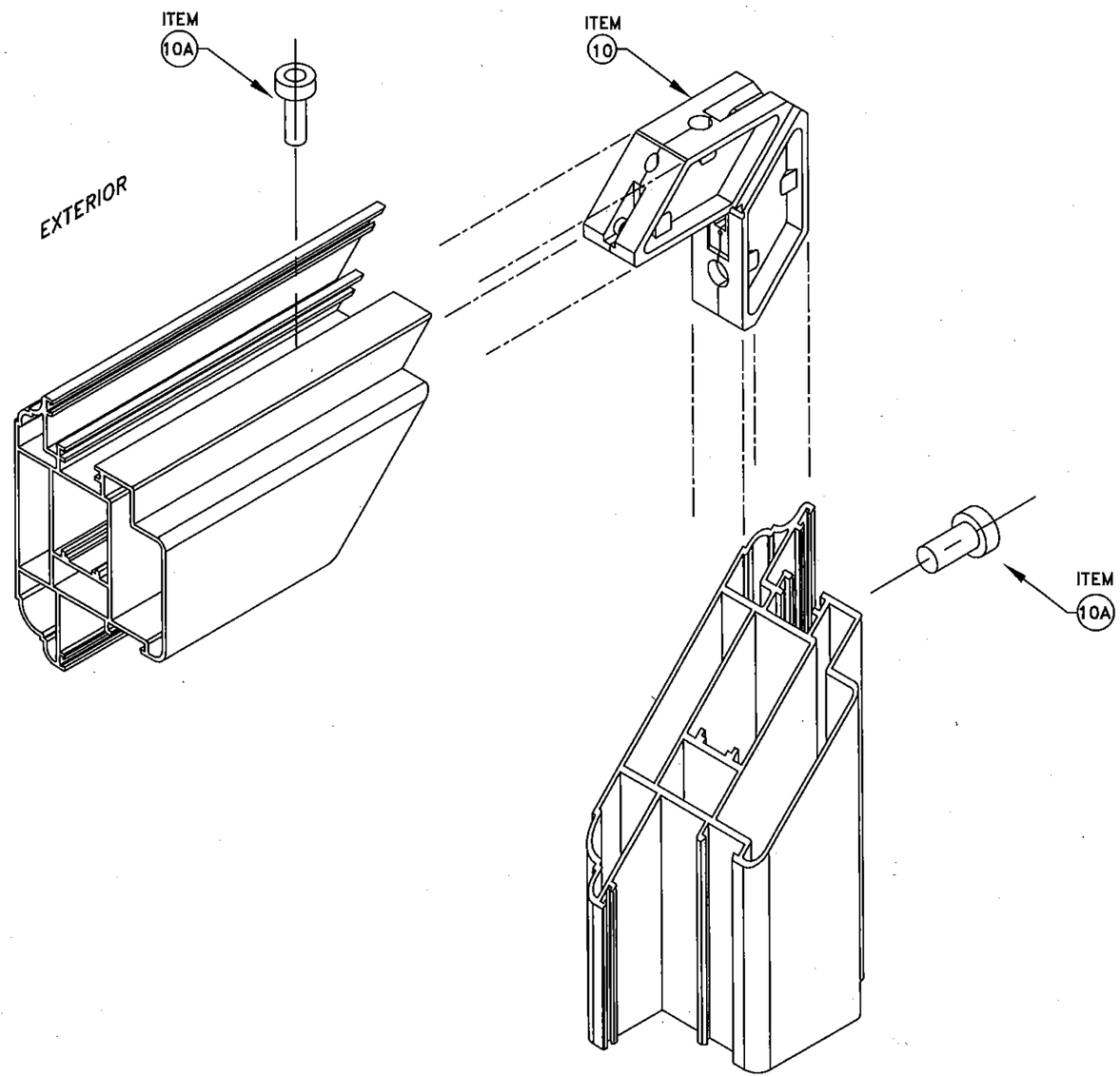

WINDOW PANEL CORNER DETAIL

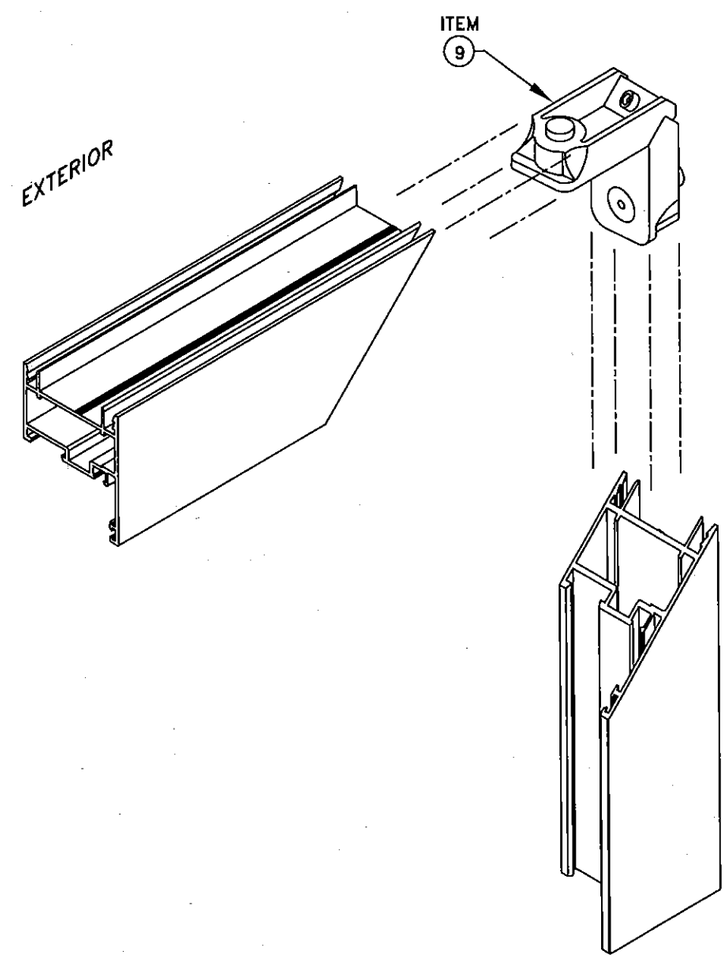

WINDOW FRAME CORNER DETAIL

NOTE: SEAL JOINTS WITH POLYURETHANE SEALANT DURING ASSEMBLY

PRODUCT REVISED
as complying with the Florida Building Code
Acceptance No 13-1203.06
Expiration Date Feb. 27, 2018
By Manuel Perez
Miami Dade Product Control

LA FINESTRA, L.C.
ITALIAN WINDOWS & DOORS
2790 Northwest 104th Court
Miami, FL 33172-2175
Phone (305) 599-8093
Fax (305) 592-4671

BROMLEY-COOK ENGINEERING, INC.
STRUCTURAL ENGINEERING SERVICES
5440 N.W. 33RD AVENUE SUITE 100
FORT LAUDERDALE, FL 33309
WILLIAM D. COOK FL. P.E. #43904
JUL 23 2014
FLORIDA PROFESSIONAL ENGINEER

PRODUCT:
EKU-53
IMPACT
WINDOWS

REVISIONS

No.	DATE	BY	DESCRIPTION
2	10/15/13	MG	ADDED ARCH TOP
3	12/16/13	MG	ADDED ALTERNATE EXTRUSIONS
4	04/09/14	MG	REVIEW COMMENTS
5	07/23/14	MG	REVIEW COMMENTS

DATE: 07/18/2013
SCALE: AS NOTED
DWG. BY: LA FIN
CHK. BY:

DRAWING No.:
FN-EKU53

SHEET: 11 OF 13

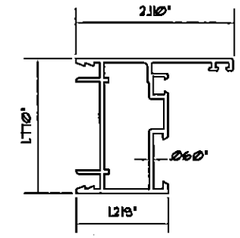

1 7011 - FRAME HEAD-JAMB-SILL
WITHOUT FLANGE

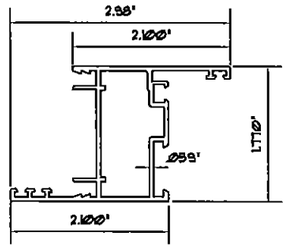

1A 7012 - FRAME HEAD-JAMB-SILL
WITH FLANGE

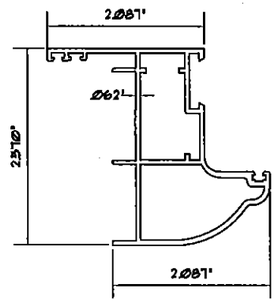

1B 17948 - FRAME HEAD

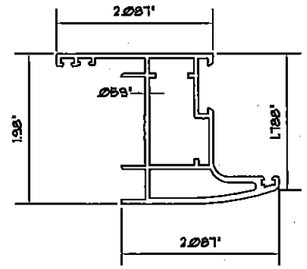

1C 17949 - FRAME HEAD

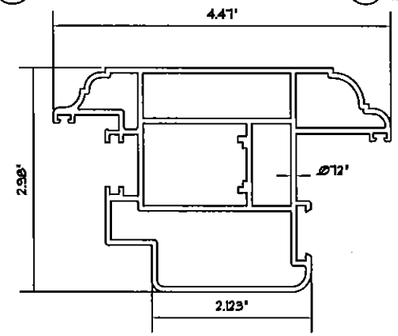

2 Z16012 - PANEL HEAD / JAMB / SILL

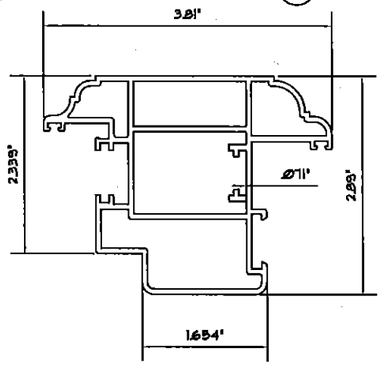

2A Z16013 - PANEL HEAD / JAMB / SILL

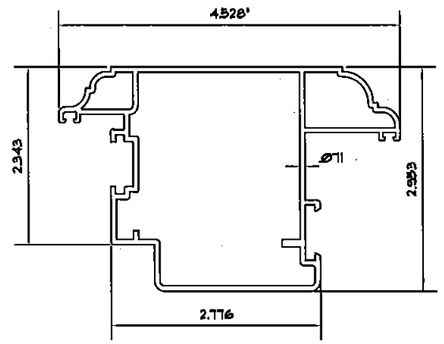

2B Z16978 - PANEL HEAD / JAMB / SILL

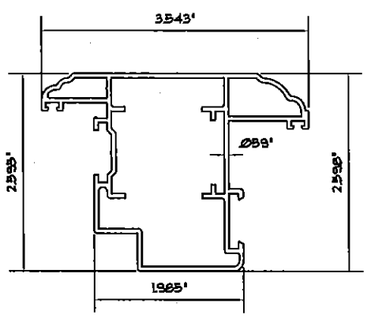

2C 18853 - PANEL HEAD / JAMB / SILL

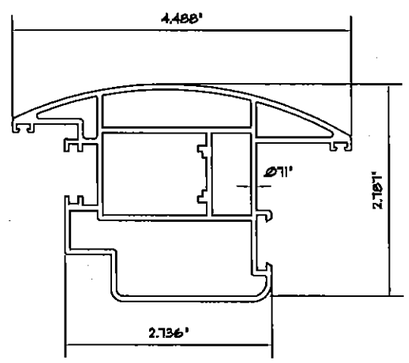

2D Z16012 - PANEL HEAD / JAMB / SILL

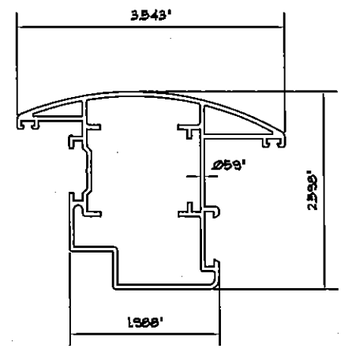

2E Z16013 - PANEL HEAD / JAMB / SILL

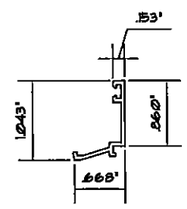

28 4293 GLAZING BEAD

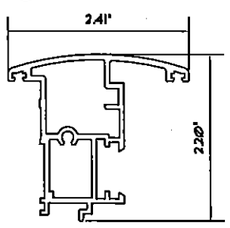

3 Z16014 - ASTRAGAL

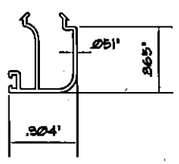

4 4195 - GLAZING BEAD

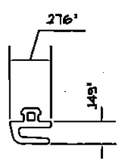

17 2666 WEATHERSTRIP GASKET

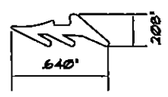

18 002/009 WEDGE GASKET

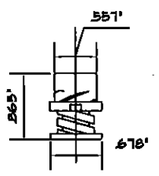

25 CD.100.BK FRAME INSERT

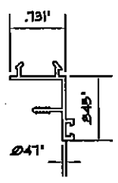

27 092109 GLAZING BEAD

PRODUCT REVISED
as complying with the Florida
Building Code
Acceptance No 13-1203.06
Expiration Date Feb.21,2018
By Manuel Perez
Miami-Dade Product Control

LA FINESTRA, L.C.
ITALIAN WINDOWS & DOORS
2790 Northwest 104th Court
Miami, FL 33172-2175
Phone (305) 599-8093
Fax (305) 592-4671

BROWARD COOK ENGINEERING, INC.
STRUCTURAL ENGINEERING SERVICES
5440 N.W. 33RD AVENUE, SUITE 300
FORT LAUDERDALE, FL 33309
WILLIAM D. COOK PE #43904

WILLIAM D. COOK
STATE OF FLORIDA
PROFESSIONAL ENGINEER

PRODUCT:
EKU-53
IMPACT
WINDOWS

REVISIONS

No.	DATE	BY	DESCRIPTION
2	10/15/13	MG	ADDED ARCH TOP
3	12/16/13	MG	ADDED ALTERNATE EXTRUSIONS
4	04/09/14	MG	REVIEW COMMENTS
5	07/23/14	MG	REVIEW COMMENTS

DATE: 07/18/2013
SCALE: AS NOTED
DWG. BY: LA FIN
CHK. BY:

DRAWING No.:
FN-EKU53

SHEET: 12 OF 13

BILL OF MATERIALS

ITEM	PART No.	QUANTITY	DESCRIPTION	MATERIAL	LOCATION	MANUFACTURER
1	7011	4	FRAME HEAD/JAMB/RESIDENTIAL SILL	AL.AL. –6060–T5	WINDOW FRAME	PROFILATI SpA
1A	7012	4	FRAME HEAD/JAMB/RESIDENTIAL SILL	AL.AL. –6060–T5	WINDOW FRAME	PROFILATI SpA
1B	17948	4	FRAME HEAD/JAMB/RESIDENTIAL SILL	AL.AL. –6063–T5	WINDOW FRAME	PROFILATI SpA
1C	17949	4	FRAME HEAD/JAMB/RESIDENTIAL SILL	AL.AL. –6063–T5	WINDOW FRAME	PROFILATI SpA
2	Z16012	4	PANEL HEAD/JAMB/SILL	AL.AL. –6060–T5	WINDOW FRAME	PROFILATI SpA
2A	Z16013	4	PANEL HEAD/JAMB/SILL	AL.AL. –6063–T5	WINDOW FRAME	PROFILATI SpA
2B	Z19678	4	PANEL HEAD/JAMB/SILL	AL.AL. –6063–T5	WINDOW FRAME	PROFILATI SpA
2C	Z18853	4	PANEL HEAD/JAMB/SILL	AL.AL. –6063–T5	WINDOW FRAME	PROFILATI SpA
2D	Z16012	4	PANEL HEAD/JAMB/SILL	AL.AL. –6063–T5	WINDOW FRAME	PROFILATI SpA
2E	Z16013	4	PANEL HEAD/JAMB/SILL	AL.AL. –6063–T5	WINDOW FRAME	PROFILATI SpA
3	Z16014	1	ASTRAGAL	AL.AL. –6060–T5	INACTIVE LEAF PANEL JAMB	PROFILATI SpA
4	4195	4/VENT	GLAZING BEAD	AL.AL. –6060–T5	PANEL PERIMETER	PROFILATI SpA
5	NOT USED					
6	A8221	6/VENT	4" BUTTHINGES	AL.AL. –6060–T5	PANEL AND FRAME JAMBS	MASTER
6A	160/12	6/VENT	4" BUTTHINGES	AL.AL. –6060–T5	PANEL AND FRAME JAMBS	CASALI
7	N/A	2 EA. LITE OF GLASS	1/4" X 1/2" X 3" LG. SETTING BLOCK	EXTRUDED SILICONE	@ 6" FROM ENDS	GENERIC
9	0409	1 EA. CORNER	FRAME CORNER KEY	CAST ALUMINUM	FRAME CORNERS	MONTICELLI
10	5004	1 EA. CORNER	PANEL CORNER KEY	CAST ALUMINUM	PANEL CORNERS	MONTICELLI
10A	001	1 EA. CORNER	PANEL CORNER KEY	EXT. ALUMINUM	PANEL CORNERS	PROFILATI SpA
10B	002	1 EA. CORNER	PANEL CORNER KEY	EXT. ALUMINUM	PANEL CORNERS	PROFILATI SpA
12	SERIES 800	1/VENT	OPERATING HANDLE	ALUMINUM	EACH PANEL JAMB	PASINI
13	1025	2	TRANSMISSION MOVEMENT DEVISE	ZAMA/S.S.	PANEL JAMB ASTRAGAL SIDE ONLY	GSG
14	1286		5–POINT LOCKING SYSTEM	S.S.	ACTIVE PANEL	AMESBURY
15	FB–1300–20–SS	2	FLUSH BOLT	S.S.	ACTIVE PANEL	SULLIVAN
16	4031	AS SHOWN	MUSHROOM HEAD AND KEEPERS	S.S./ALUMINUM	PANEL JAMB AT TOP & BOTTOM	GSG/LAFIN
16A	CD–MPK–100–SS		MULTIPOINT KEEPER KIT	S.S./ALUMINUM	PANEL JAMB AT TOP & BOTTOM	SULLIVAN
17	2666	AS REQ'D.	WEATHERSTRIP GASKET	EPDM	FRAME JAMB/ASTRAGAL/FRAME PANEL	PROFILATI SpA
18	002/009	AS REQ'D.	WEDGE GASKET	EPDM	PANEL GLAZING PERIM. (INTERIOR)	PROFILATI SpA
19	---	2/EACH	# 10 x 2 1/2" FH.SMS. (ASSEMBLY)	PLATED STEEL	FLUSHBOLT STRIKE PLATE	---
20	---	SEE ELEV.	# 10 x 2" FH.SMS. (ASSEMBLY)	PLATED STEEL	ASTRAGAL (SINGLE ROW)	---
22	---	2 EA. CORNER	#14 X 3/4" FH. SMS. (PANEL ASS'Y)	PLATED STEEL	PANEL CORNERS	---
23	895/995	CONTINUOUS	STRUCTURAL SILICONE	SILICONE	PERIMETER GLASS TO METAL	PECORA OR DOW CORNING
25	CD.100.BK	AS REQ'D.	FRAME INSERT	ALLUM/NYLON	FRAME PERIMETER (SINGLE ROW)	SULLIVAN
26	SDG.SP.316	AS REQ'D.	STRIKE PLATE	S.S.	ALONGSIDE FRAME (WHERE LOCK MEETS)	SULLIVAN
27	092109	4/VENT	GLAZING BEAD	AL.AL. –6060–T5	PANEL PERIMETER	PROFILATI SpA
28	4293	4/VENT	GLAZING BEAD	AL.AL. –6060–T5	PANEL PERIMETER	PROFILATI SpA
29	2167/2168	2	FLUSH BOLT	ZAMA	INACTIVE PANEL	GSG

NOT USED: 5, 8, 21, 11, 24

PRODUCT REVISED
as complying with the Florida
Building Code
Acceptance No 13-1203.06
Expiration Date Feb. 27, 2018
By Manuel Perez
Miami-Dade Product Control

LA FINESTRA, L.C.
ITALIAN WINDOWS & DOORS
2790 Northwest 104th Court
Miami, FL 33172–2175
Phone (305) 599–8093
Fax (305) 592–4671

BROMLEY-COOK ENGINEERING, INC.
STRUCTURAL ENGINEERING
6446 N.W. 33RD AVENUE SUITE 204
FORT LAUDERDALE, FL 33309
WILLIAM D. COOK FL. P.E. #43904
No 43904
STATE OF FLORIDA
PROFESSIONAL ENGINEER

JUL 23 2014

PRODUCT:
EKU–53
IMPACT
WINDOWS

REVISIONS

No.	DATE	BY	DESCRIPTION
2	10/15/13	MG	ADDED ARCH TOP
3	12/16/13	MG	ADDED ALTERNATE EXTRUSIONS
4	04/09/14	MG	REVIEW COMMENTS
5	07/23/14	MG	REVIEW COMMENTS

DATE: 07/18/2013
SCALE: AS NOTED
DWG. BY: LA FIN
CHK. BY:

DRAWING No.:
FN–EKU53

SHEET: 13 OF 13