MIAMI-DADE COUNTY
PRODUCT CONTROL SECTION
11805 SW 26 Street, Room 208
Miami, Florida 33175-2474
T (786) 315-2590 F (786) 315-2599
www.miamidade.gov/economy

DEPARTMENT OF REGULATORY AND ECONOMIC RESOURCES (RER)
BOARD AND CODE ADMINISTRATION DIVISION

NOTICE OF ACCEPTANCE (NOA)

Schlage Lock Company
6810 Hillsdale Court
Indianapolis, IN 46250

SCOPE:

This NOA is being issued under the applicable rules and regulations governing the use of construction materials. The documentation submitted has been reviewed and accepted by Miami-Dade County RER -Product Control Section to be used in Miami Dade County and other areas where allowed by the Authority Having Jurisdiction (AHJ).

This NOA shall not be valid after the expiration date stated below. The Miami-Dade County Product Control Section (In Miami Dade County) and/or the AHJ (in areas other than Miami Dade County) reserve the right to have this product or material tested for quality assurance purposes. If this product or material fails to perform in the accepted manner, the manufacturer will incur the expense of such testing and the AHJ may immediately revoke, modify, or suspend the use of such product or material within their jurisdiction. RER reserves the right to revoke this acceptance, if it is determined by Miami-Dade County Product Control Section that this product or material fails to meet the requirements of the applicable building code.

This product is approved as described herein, and has been designed to comply with the Florida Building Code, including the High Velocity Hurricane Zone.

DESCRIPTION: SteelCraft H Series Double Flush Outswing Commercial Steel Door w/wo Panic Exit-LMI

APPROVAL DOCUMENT: Drawing No **IRF-D07 Rev L**, titled "Steelcraft H series Double Flush outswing", sheets 1 through 13 of 13, prepared by the manufacturer, dated 05-20-07 and last revised on 03/17/15, signed and sealed by Thomas Gordon, P.E., bearing the Miami-Dade County Product Control Revision stamp with the Notice of Acceptance number and expiration date by the Miami-Dade County Product Control Section.

MISSILE IMPACT RATING: Large and Small Missile Impact

Limitations:

1. See Design Pressures, Sizes, Hardware and Water infiltration (Threshold types) limitations in sheets **1, 2** and **5** of the drawings. Lower design Pressure shall control the assembly.
2. ElFom P200 (Polyisocynurate) is by Elliott Company of Indianapolis.
3. Use of Ives Viewers (model U696/U698) is limited to +/-75 PSF.
4. Electrical/Electronic functions and Fire ratings are **not** part of this approval, such functions to be reviewed and approved by AHJ.

LABELING: Each unit shall bear a permanent label with the manufacturer's name or logo, Cincinnati, Ohio and Series and following statement: "Miami-Dade County Product Control Approved", unless otherwise noted herein.

RENEWAL of this NOA shall be considered after a renewal application has been filed and there has been no change in the applicable building code negatively affecting the performance of this product.

TERMINATION of this NOA will occur after the expiration date or if there has been a revision or change in the materials, use, and/or manufacture of the product or process. Misuse of this NOA as an endorsement of any product, for sales, advertising or any other purposes shall automatically terminate this NOA. Failure to comply with any section of this NOA shall be cause for termination and removal of NOA.

ADVERTISEMENT: The NOA number preceded by the words Miami-Dade County, Florida, and followed by the expiration date may be displayed in advertising literature. If any portion of the NOA is displayed, then it shall be done in its entirety.

INSPECTION: A copy of this entire NOA shall be provided to the user by the manufacturer or its distributors and shall be available for inspection at the job site at the request of the Building Official.

This NOA **revises & renews NOA #12-0305.13** (Ingersoll-Rand) and consists of this page 1 and evidence pages E-1, E-2 and E-3, as well as approval document mentioned above.

The submitted documentation was reviewed by **Ishaq I. Chanda, P.E.**

MIAMI-DADE COUNTY APPROVED

4/29/15

NOA No. 13-1217.17
Expiration Date: May 05, 2016
Approval Date: May 07, 2015
Page 1

NOTICE OF ACCEPTANCE: EVIDENCE SUBMITTED

A. DRAWINGS

1. Manufacturer's parts and sections drawings (Submitted under file as below).
2. Drawing No **IRF-D07 Rev L**, titled "Steelcraft H series Double Flush outswing", sheets 1 through 13 of 13, prepared by the manufacturer, dated 05-20-07 and last revised on 03/17/15, signed and sealed by Thomas Gordon, P.E.

B. TESTS (Submitted under files **#12-0305.13/ #10-0209.06/#07-0829.03**)

1. Test report on
   1) Air Infiltration Test, per TAS 202-94
   2) Uniform Static Air Pressure Test, Loading per TAS 202-94
   3) Large Missile Impact Test per FBC, TAS 201-94
   4) Cyclic Wind Pressure Loading per FBC, TAS 203-94
   5) Forced Entry Test, per PA 202-94

   Along with manufacturer's parts and section drawings of Single outswing steel doors w/ Stainless steel continuous Hinges & modified Hat stiffeners, marked by Certified Testing Lab, Test Reports No(s). **CTLA-3045W** dated February 16, 2015, signed and sealed by Ramesh Patel, P.E.
2. Test report on
   1) Air Infiltration Test, per TAS 202-94
   2) Uniform Static Air Pressure Test, Loading per TAS 202-94
   3) Large Missile Impact Test per FBC, TAS 201-94
   4) Cyclic Wind Pressure Loading per FBC, TAS 203-94
   5) Forced Entry Test, per PA 202-94

   Along with manufacturer's parts and section drawings of double outswing steel doors w/CVC panic exit and Peep hole, marked by Element Material Technology, Test Reports No(s). **ESP011623P** dated May 14, 2013, signed and sealed by Jason Sheen, P.E.
3. Test reports on
   1) Uniform Static Air Pressure Test, Loading per FBC TAS 202-94.
   2) Water Resistance Test per FBC TAS 202-94

   Along with marked-up drawings and installation diagram of double steel commercial doors, prepared by National Certified Testing Laboratories Inc., Test Report No. **NCTL- 210-03-0514-11,** dated August 31, 2004 , **NCTL 210- 03-3511-1** dated 04/09/08 and **NCTL 210- 03-3549-1** dated 08/26/08, all signed and sealed by Gerry Ferrara, P. E.

   Note: Test report No(s): NCTL210-3549-1 and NCTL-210-3511-1 have been revised by an addendum letter, issued by Lab, dated Feb. 04, 2009, signed & sealed by Gerard J. Ferrara, P. E.
4 Test report on
   1) Air Infiltration Test, per TAS 202-94
   2) Water Resistance Test per FBC TAS 202-94(Not conducted)
   3) Uniform Static Air Pressure Test, Loading per TAS 202-94
   4) Large Missile Impact Test per FBC, TAS 201-94
   5) Cyclic Wind Pressure Loading per FBC, TAS 203-94
   6) Forced Entry Test, per PA 202-94

   Along with manufacturer's parts and section drawings of double flush outswing steel doors, marked by National Certified Testing Lab, Test Reports No. **NCTL-210- 3580-2,** dated March 25, 2009 and **NCTL-210- 3357-1**, both signed and sealed by Gerry Ferrara, P. E.

Ishaq I. Chanda

Ishaq I. Chanda, P.E.
Product Control Examiner
NOA No. 13-1217.17
Expiration Date: May 05, 2016
Approval Date: May 07, 2015

NOTICE OF ACCEPTANCE: EVIDENCE SUBMITTED

B. TESTS (continue)

5. Test report on (transferred from file # **07-0829.03**)
   1) Air Infiltration Test, per TAS 202-94
   2) Uniform Static Air Pressure Test, Loading per TAS 202-94
   3) Large Missile Impact Test per FBC, TAS 201-94
   4) Cyclic Wind Pressure Loading per FBC, TAS 203-94
   5) Forced Entry Test, per PA 202-94

Along with manufacturer's parts and section drawings of double glazed outswing steel doors, marked by Certified Testing Lab, Test Reports No(s). **CTLA-776W** dated February 20, 2002, **CTLA-975W** dated Jan 23, 2003, **CTLA-882W** dated Aug 29, 2002, **CTLA-1035W** dated May 28, 2003 and , **CTLA-1086-W** dated Nov. 17, 2003 and **CTLA-1107W-3** dated June 30, 2004, all signed and sealed by Ramesh Patel, P.E.

Note: Test report CTLA-1035W has been revised by an addendum letter dated Feb 20, 2009, signed and sealed by Ramesh Patel, P.E.

6. Additional Reference test report No.CTLA-1107W for strap anchor qualification.

C. CALCULATIONS: (Submitted under file # **10-0209.07**)

1. Anchor verification evaluation report dated 04/27/2007 and last revised on 07/14/2008, prepared, signed & sealed by Thomas Gordon., P.E.
2. Hinge Load Evaluation report dtd 01/04/04, prepared, signed & sealed by Thomas Gordon, P.E.

D. QUALITY ASSURANCE BY

1. Miami Dade Department of Regulatory and Economic Resources (RER).

E. MATERIAL CERTIFICATIONS (items 6 thru 9, submitted under file # **10-0209.07**)

1. Material composition & Flammability properties and Material Safety Data sheet of Pyrophobic P25C-60 core by Pyrophobic System LTD, dated DEC 05, 2010, issued by I. Zhvanetsky, chemical consultant.
2. Material composition & Flammability properties and Material Safety Data sheet of Calcium Silicate mineral block, issued by Marshfield Door Sys, Inc., Marshfield. WI 54449.
3. Test Report No. **12-11177**, Nov 29, 2012, issued by Commercial Testing Co. for "Surface Flame spread & Smoke density Characteristics of Building material" per ASTME84-12 for "Elfoam P200", issued to Elliott Co. of Indianapolis Inc.
4. Test Report No. **16206-122543 (1015P200(3))**, dated November 29, 2004 for " Surface Burning Characteristics of Bldg. material" per ASTME84 and self-Ignition per ASTM1929D for "Polyisocyanurate" issued by Omega Point Laboratories, Inc. to Elliot Co., Indianapolis, IN.
5. Tensile test report # CTLA-776W (0194H), dtd 02/25/02 prepared by CTL, Architectural Division, sheet samples, tested per ASTM E8, signed & sealed by Ramesh Patel, P.E.
6. Test Report No. **3094867SAT-001**, April 13, 2006, issued by Intertek for "Surface Burning Characteristics of Building material" per ASTME84 and self-Ignition per ASTM1929D for "EPS", issued to Falcon Foam, a Div. of Atlas Roofing, re-named as "ATLAS EPS'

Ishaq I. Chanda

Ishaq I. Chanda, P.E.
Product Control Examiner
NOA No. 13-1217.17
Expiration Date: May 05, 2016
Approval Date: May 07, 2015

NOTICE OF ACCEPTANCE: EVIDENCE SUBMITTED

E. MATERIAL CERTIFICATIONS (continue)

7. Tensile Test report No. A103W1-Test 1, 2 & 3 dated 23 APR 03 per ASTME-8 for steel face sheet, prepared by Certified Testing laboratory, signed and sealed by Ramesh Patel, P.E.
8. Test Report No. **3094867SAT-001**, April 13, 2006, issued by Intertek for "Surface Burning Characteristics of Building material" per ASTME84 and self-Ignition per ASTM1929D for "EPS", issued to Falcon Foam, a Div of Atlas Roofing, re-named as "ATLAS EPS'.

F. STATEMENTS: Except items #1 thru 5, balanced items submitted under file **#10-0209.09.**

1. Letter of conformance to **FBC 2010**, dated 02/15/12 & 03/17/15, prepared, signed and sealed by Gordon Thomas, P.E.
2. Statement letter dated Nov. 26, 2013 issued by Ingersoll-Rand for name change, signed by Jim Donlan, Compliance Engineer.
3. Ingersoll–Rand press release, dated 12/10/12, integrating the brands of Ingersoll–Rand and Schlage among others.
4. Department of State Certification of Reinstatement for **SCHLAGE LOCK COMPANY, LLC** as a limited liability company, active and organized under the laws of the State of Florida, dated 03/17/06 and filed with the Secretary of State
5. Certification of Formation dated 12-08-2003 of Schlage Lock Company, LLC, issued by Secretary of State of Delaware.
6. Statement letter of conformance to FBC 2007 and no financial interest, dated FEB 02, 2010, prepared, signed and sealed by Gordon Thomas, P.E.
7. Laboratory Compliance statement issued as part of the above test reports.
8. Addendum letter dated DEC 19, 2011, issued by Certified Testing Lab verifying wire anchors, strength of grout, stud anchor, Strike plate and MA series Mortise Lock, supplemented w/ marked-up drawings, signed and sealed by Ramesh Patel, P.E.
9. Letter of certification dated 04/20/10, issued by Ingersoll-Rand for electronic CO lock series mechanical /functional parts same as AD, ND and AD-M series.

G. OTHER

1. This NOA **revises & renews NOA #12-0305.13** (Ingersoll-Rand), expiring on 05/05/16.
2. **One** year conditional approval, subjected to successful verification test.
3. Request for 1-Year renewal by Schlage Company dated 03/26/15, signed by James Donlan.
4. Test proposals # **14-0252**, **-0254**, **#14-1086**, **#14-0254-R1** and **#12-0797R** approved by RER.
5. Consolidation Test proposal # **06-2468**, dated 04/27/07 approved by BCCO.
6. Previously consolidates NOA (s) associated with this files are NOA #10-0209.07, 07-0829.04, 02-0712.01, 02-0712.03, 03-0908.03, 04-0203.03, 04-0303.03 and 05-0103.01.
7. Technical brochures of butt Hinges, continuous Hinges, Schlage & Falcon Mortise Locks, Supplied by Schlage Company (former Ingersoll-Rand).

Ishaq I. Chanda

Ishaq I. Chanda, P.E.
Product Control Examiner
NOA No. 13-1217.17
Expiration Date: May 05, 2016
Approval Date: May 07, 2015

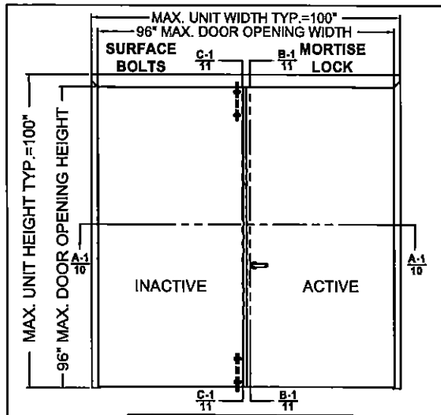

CONFIG.	DESIGN PRESSURE RATING, PSF: WHERE WATER INFILTRATION REQUIREMENT IS NEEDED	DESIGN PRESSURE RATING, PSF: WHERE WATER INFILTRATION REQUIREMENT IS NOT NEEDED
1	±75 SEE TABLE 3 ON SHT. 5	±75 SEE TABLE 4 ON SHT. 5

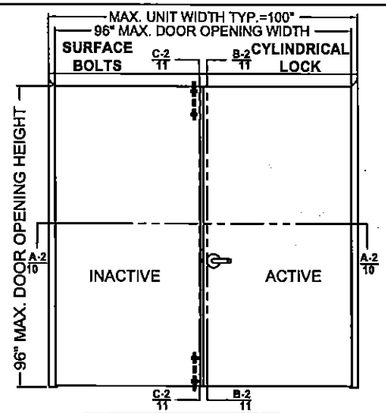

CONFIG.	DESIGN PRESSURE RATING, PSF: WHERE WATER INFILTRATION REQUIREMENT IS NEEDED	DESIGN PRESSURE RATING, PSF: WHERE WATER INFILTRATION REQUIREMENT IS NOT NEEDED
2	±55 SEE TABLE 3 ON SHT. 5	±55 SEE TABLE 4 ON SHT. 5

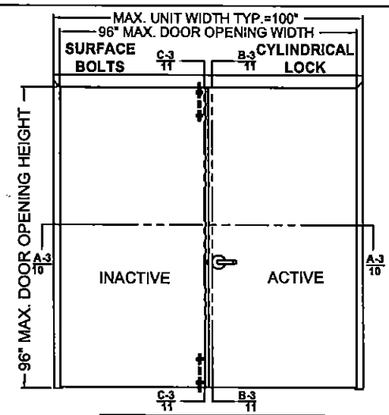

CONFIG.	DESIGN PRESSURE RATING, PSF: WHERE WATER INFILTRATION REQUIREMENT IS NEEDED	DESIGN PRESSURE RATING, PSF: WHERE WATER INFILTRATION REQUIREMENT IS NOT NEEDED
3	±65 SEE TABLE 3 ON SHT. 5	±65 SEE TABLE 4 ON SHT. 5

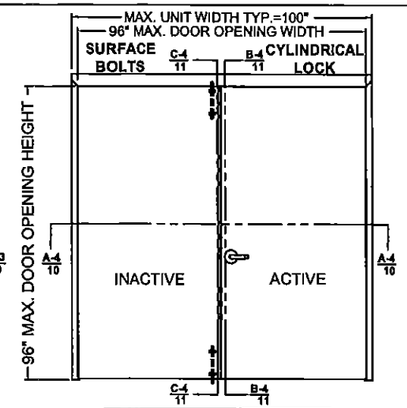

CONFIG.	DESIGN PRESSURE RATING, PSF: WHERE WATER INFILTRATION REQUIREMENT IS NEEDED	DESIGN PRESSURE RATING, PSF: WHERE WATER INFILTRATION REQUIREMENT IS NOT NEEDED
4	±75 SEE TABLE 3 ON SHT. 5	±75 SEE TABLE 4 ON SHT. 5

GORDON D. THOMAS
LICENSE No. 46716
STATE OF FLORIDA
PROFESSIONAL ENGINEER

Gordon Thomas, P.E.
1759 Blossom Court
Mason, OH 45040
Florida # 46716

Date: 3/17/15

REVISIONS				
LTR	DESCRIPTION		DATE	APPROVED
A	APPROVAL DWG	YMF	05/20/07	
D	REVISED DWG	YMF	01/15/08	
E	REVISED DWG	YMF	02/28/08	
F	REVISED DWG	YMF	05/30/08	
G	REVISED PER_MDBCCO	YMF	02/06/09	
H	REVISED DWG	YMF	02/01/10	
J	REVISED DWG	YMF	04/06/10	
K	REVISED NAME	JPD	11/01/13	
L	REVISED DWG	JPD	02/01/15	

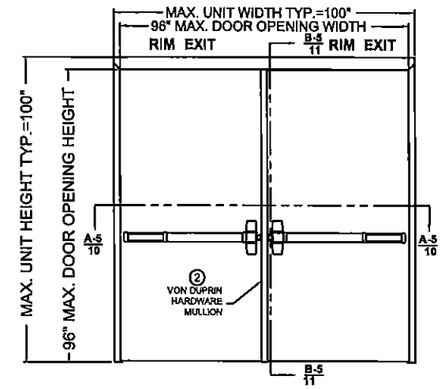

CONFIG.	DESIGN PRESSURE RATING, PSF: WHERE WATER INFILTRATION REQUIREMENT IS NEEDED	DESIGN PRESSURE RATING, PSF: WHERE WATER INFILTRATION REQUIREMENT IS NOT NEEDED
5	±75 SEE TABLE 3 ON SHT. 5	±90 * SEE TABLE 4 ON SHT. 5

* SEE NOTE 4 ON SHEET 2

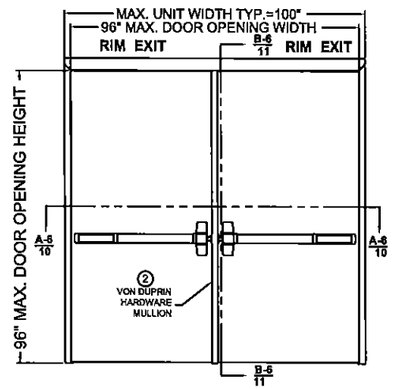

CONFIG.	DESIGN PRESSURE RATING, PSF: WHERE WATER INFILTRATION REQUIREMENT IS NEEDED	DESIGN PRESSURE RATING, PSF: WHERE WATER INFILTRATION REQUIREMENT IS NOT NEEDED
6	±70 SEE TABLE 3 ON SHT. 5	±70 SEE TABLE 4 ON SHT. 5

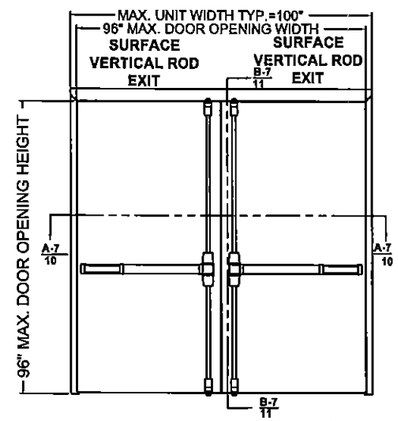

CONFIG.	DESIGN PRESSURE RATING, PSF: WHERE WATER INFILTRATION REQUIREMENT IS NEEDED	DESIGN PRESSURE RATING, PSF: WHERE WATER INFILTRATION REQUIREMENT IS NOT NEEDED
7	±70 SEE TABLE 3 ON SHT. 5	±70 SEE TABLE 4 ON SHT. 5

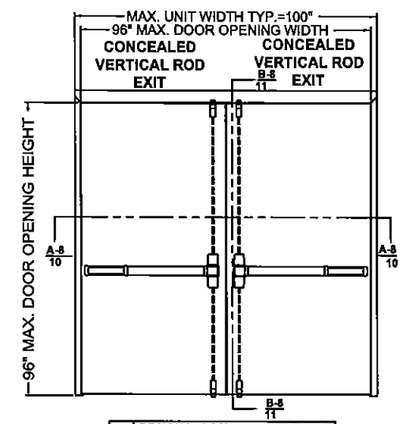

CONFIG.	DESIGN PRESSURE RATING, PSF: WHERE WATER INFILTRATION REQUIREMENT IS NEEDED	DESIGN PRESSURE RATING, PSF: WHERE WATER INFILTRATION REQUIREMENT IS NOT NEEDED
8	±70 SEE TABLE 3 ON SHT. 5	±70 SEE TABLE 4 ON SHT. 5

DETAIL 'C' MEETING DOOR EDGES

DOOR CONFIGURATIONS: 1, 2, 3, 4
Z-ASTRAGAL ON INACTIVE LEAF

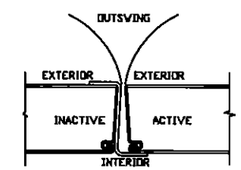

DOOR CONFIGURATIONS: 5, 6, 9 & 11
VON DUPRIN REMOVABLE HARDWARE MULLIONS

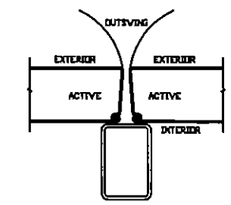

REMOVABLE HARDWARE MULLION
SEE SHEET 13

DOOR CONFIGURATIONS: 7 & 8
NO ASTRAGAL / NO MULLION
BOTH DOORS ACTIVE

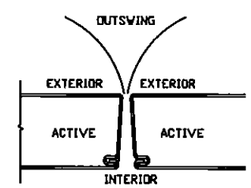

DOOR CONFIGURATION: 10
FIXED HOLLOW METAL MULLION

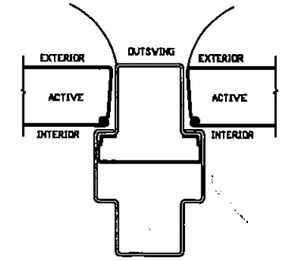

FIXED HOLLOW METAL MULLION
SEE SHEETS 6 &12

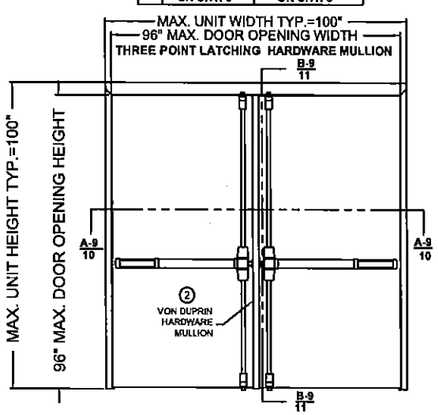

CONFIG.	DESIGN PRESSURE RATING, PSF: WHERE WATER INFILTRATION REQUIREMENT IS NEEDED	DESIGN PRESSURE RATING, PSF: WHERE WATER INFILTRATION REQUIREMENT IS NOT NEEDED
9	±70 SEE TABLE 3 ON SHT. 5	±70 SEE TABLE 4 ON SHT. 5

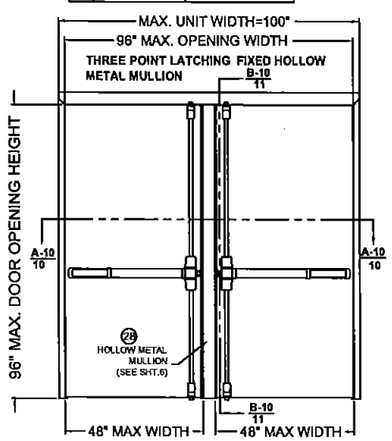

THREE POINT LATCHING FIXED HOLLOW METAL MULLION

CONFIG.	DESIGN PRESSURE RATING, PSF: WHERE WATER INFILTRATION REQUIREMENT IS NEEDED	DESIGN PRESSURE RATING, PSF: WHERE WATER INFILTRATION REQUIREMENT IS NOT NEEDED
10	±70 SEE TABLE 3 ON SHT. 5	±70 SEE TABLE 4 ON SHT. 5

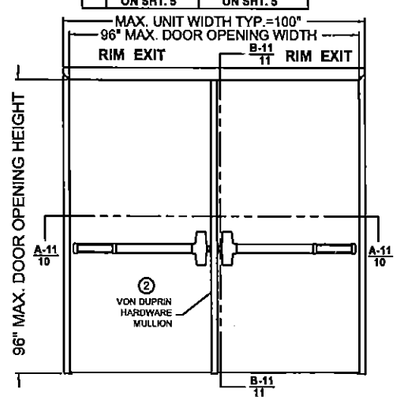

RIM EXIT DEVICES WITH HARDWARE MULLION

CONFIG.	DESIGN PRESSURE RATING, PSF: WHERE WATER INFILTRATION REQUIREMENT IS NEEDED	DESIGN PRESSURE RATING, PSF: WHERE WATER INFILTRATION REQUIREMENT IS NOT NEEDED
11	+70/-55 SEE TABLE 3 ON SHT. 5	+70/-55 SEE TABLE 4 ON SHT. 5

PRODUCT REVISED
as complying with the Florida Building Code
Acceptance No. 13-1217.17
Expiration Date MAY 05, 2016
By [illegible]
Miami Dade Product Control

NOTES:
1. INTERIOR VIEWS ARE SHOWN FOR ALL ELEVATIONS (OUTSWING DOORS)
2. SEE TABLE 1 ON SHEET 2 FOR HARDWARE APPLICATIONS AND LIMITATIONS
3. SEE SHEET 3 & 13 FOR HINGE REQUIREMENTS
4. SEE SHEET 4 FOR ANCHORING TYPES AND LIMITATIONS
5. SEE SHEET 5 FOR WEATHERSTRIPPING INSTALLATION DETAILS AND LIMITATIONS
6. SEE SHEETS 3, 4 AND 5 FOR SILL INSTALLATION INFORMATION

BEND RADIUS

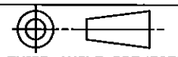

THIRD ANGLE PROJECTION

DRAWN	YMF	DATE 05/20/07
CHECKED		
APPROVED		
ENG. APPVL	JPD	10/12/07

SCHLAGE LOCK COMPANY, LLC
6810 HILLSDALE COURT
INDIANAPOLIS, IN 46250

MANUFACTURING FACILITY:
STEELCRAFT
9017 BLUE ASH ROAD
CINCINNATI, OH 45242

TITLE: STEELCRAFT H SERIES DOUBLE FLUSH OUTSWING COMMERCIAL STEEL DOORS WITH AND WITHOUT PANIC EXIT DEVICES

MIAMI-DADE COUNTY PRODUCT APPROVAL
FLUSH OUTSWING, DOUBLE DOORS AND HARDWARE CONFIGURATIONS.

SIZE	FLAT	DWG NO.	REV
		IRFD07	L
SCALE: NTS	AUTOCAD		SHEET 1 OF 13

TABLE 1 Locking Hardware Description

Door Configuration	Maximum Design Pressure, PSF		Maximum Door Opening Size, in.		Hardware Family	Model/Series	Strike Models	Brand	Comments
	Positive	Negative	Width	Height					
1	75	75	96	96	Mortise Lock	L/LV9400/AD MD	10-072	Schlage	Function with deadbolt, 3/4" min. throw latch & 1" min throw deadbolt
						M	ANSI	Falcon	
2	55	55	96	96	Cylindrical Lock	AL	10-025	Schlage	1/2" throw latch
3	65	65	96	96	Cylindrical Lock	D/ND/AD CYL	10-025	Schlage	1/2" throw latch
4	75	75	96	96	Cylindrical Lock	D/ND/AD CYL	10-025	Schlage	3/4" throw latch
						T	ANSI	Falcon	3/4" throw latch
5	90 SEE NOTE 4.	90 SEE NOTE 4.	96	96	Rim Exit Device	XP 98/99(F)	909/954	Von Duprin	for pairs use (KR)9954 mullion by Von Duprin
6	70	70	96	96	Rim Exit Device	98/99(F)	299F/499F	Von Duprin	for pairs use (KR)9954 mullion by Von Duprin
						88-F	268	Von Duprin	
7	70	70	96	96	Surface Vertical Rod Exit Device	98/9927(F)	299F/499F Top, 304L/248L4 Bottom	Von Duprin	
						(F)25-V	3788 Top, 2130 Bottom	Falcon	
8	70	70	96	96	Concealed Vertical Rod Exit Device	98/9947-F	338 Top, 385A Bottom	Von Duprin	
						F-25-C	4188 Top, 2130 Bottom	Falcon	
9	70	70	96	96	Three-Point Latching Device	98/9957(F)	299F/499F Top/Middle, 304L/248L4 Bottom	Von Duprin	for pairs use (KR)9954 mullion by Von Duprin
10	70	70	48	96		98/9957(F)	299F/499F Top/Middle, 304L/248L4 Bottom	Von Duprin	See note #2
11	70	55	96	96	Rim Exit Device	(F)25-R	299F/499F	Falcon	for pairs use (KR)9954 mullion by Von Duprin

REVISIONS

LTR	DESCRIPTION			DATE	APPROVED
A	APPROVAL DWG		YMF	05/20/07	
C	REVISED	DWG	RAP	12/03/07	
D	REVISED	DWG	YMF	01/16/08	
E	REVISED	DWG	YMF	02/28/08	
F	REVISED	DWG	YMF	05/30/08	
G	REVISED	PER_MDBCCO	YMF	02/06/09	
H	REVISED	DWG	YMF	03/18/09	
J	REVISED	DWG	YMF	04/06/10	
K	REVISED	NAME	JPD	11/01/13	
L	REVISED	DWG	JPD	02/01/15	

GORDON D. THOMAS LICENSE No. 46718 STATE OF FLORIDA PROFESSIONAL ENGINEER

Gordon D. Thomas, P.E. Date
8769 Blossom Court
Mason, OH 45040
Florida # 46718

PRODUCT REVISED
as complying with the Florida Building Code
Acceptance No. 13-1217.17
Expiration Date 5/5/16
By Ishwar V. Chandra
Miami Dade Product Control

NOTES:

1. FOR DOOR CONFIGURATIONS 1, 2, 3, & 4, INACTIVE LEAF REQUIRES IVES SB360 SURFACE BOLTS IN TOP AND BOTTOM
2. DOOR CONFIGURATION 10 IS USING FIXED HOLLOW METAL MULLION BETWEEN TWO DOORS
3. SEE SHEETS 7 THROUGH 12 FOR LOCKING HARDWARE AND HARDWARE MULLION DETAILS
4. DOOR CONFIGURATION 5 IS RATED FOR MAXIMUM DESIGN PRESSURE ±90 PSF WHEN WATER INFILTRATION REQUIREMENT IS NOT NEEDED, WHEN WATER INFILTRATION REQUIREMENT IS NEEDED, IT IS RATED UP TO +75 PSF WHEN USED WITH SEALS BY ZERO INTERNATIONAL AND NATIONAL GUARD PRODUCTS (NGP) (SEE TABLE 3 ON SHT.5)
5. SCHLAGE AL-SERIES CYLINDRICAL LOCK (door configuration 2) IS LIMITED TO ±55 PSF MAXIMUM DESIGN PRESSURE

BEND RADIUS

THIRD ANGLE PROJECTION

DRAWN	YMF	DATE 05/20/07
CHECKED		
APPROVED		
ENG. APPVL	JPD	10/12/07

SCHLAGE LOCK COMPANY, LLC
6810 HILLSDALE COURT
INDIANAPOLIS, IN 46250

MANUFACTURING FACILITY:
STEELCRAFT
9017 BLUE ASH ROAD
CINCINNATI, OH 45242

TITLE: STEELCRAFT H SERIES DOUBLE FLUSH OUTSWING COMMERCIAL STEEL DOORS WITH AND WITHOUT PANIC EXIT DEVICES
MIAMI-DADE COUNTY PRODUCT APPROVAL
FLUSH OUTSWING DOORS AND HARDWARE CONFIGURATIONS
COMMERCIAL DOOR OPENING DOUBLE FLUSH DOORS.

SIZE	FLAT	DWG NO.	IRFD07	REV L
SCALE: NTS	AUTOCAD			SHEET 2 OF 13

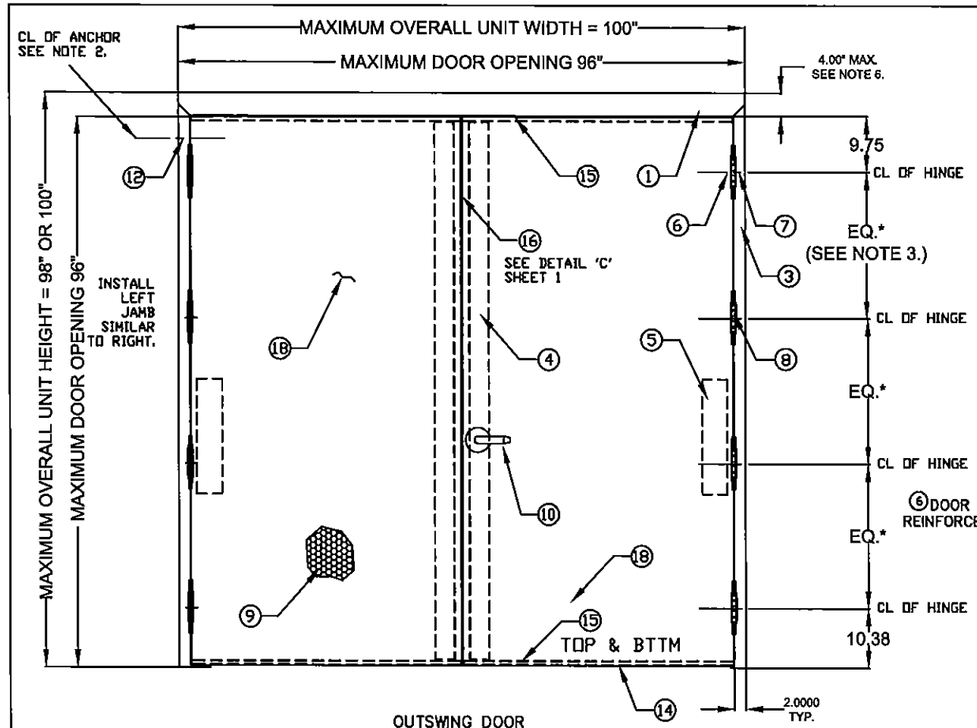

OUTSWING DOOR
(EXTERIOR VIEW)
ALL DIMENSIONS TYPICAL, UNLESS SPECIFIED OTHERWISE

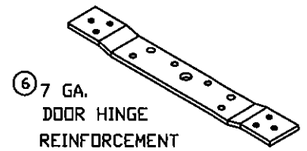

⑥ 7 GA. DOOR HINGE REINFORCEMENT

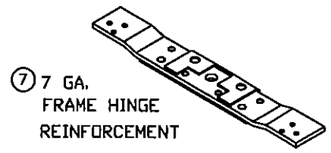

⑦ 7 GA. FRAME HINGE REINFORCEMENT

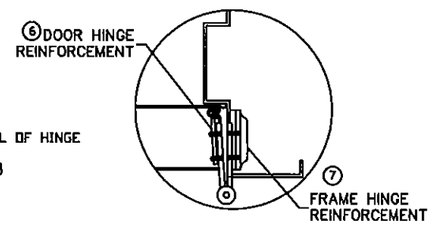

HINGE DETAIL
SEE HINGE OPTIONS SHEET 13

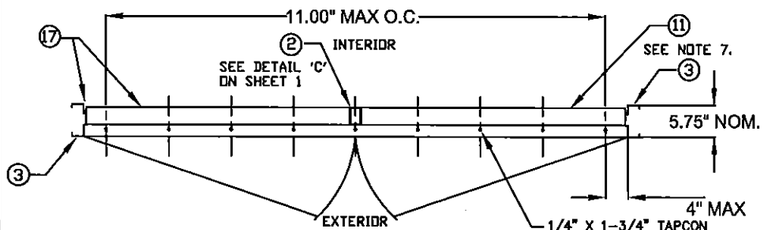

TYPICAL SILL INSTALLATION (SEE SHT.4)

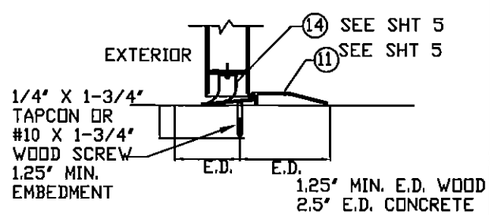

SILL DETAIL (SIDEVIEW)
WOOD OR CONCRETE SILL
E.D. - EDGE DISTANCE

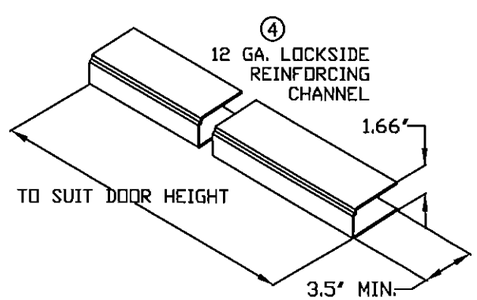

PRODUCT REVIEWED as complying with the Florida Building Code Acceptance No. 13-1217.17 Expiration Date 5/5/16 By [illegible] Miami Dade Product Control

GORDON D. THOMAS LICENSE No. 46718 STATE OF FLORIDA PROFESSIONAL ENGINEER

Gordon Thomas, P.E. Date
3759 Blossom Court
Mason, OH 45040
Florida # 46718

REVISIONS

LTR	DESCRIPTION		DATE	APPROVED
A	APPROVAL DWGS.	YMF	05/20/07	
B	REVISED DWGS.	RAP	10/12/07	
C	REVISED DWGS.	RAP	12/03/07	
D	REVISED DWGS.	YMF	01/16/08	
E	REVISED DWGS.	YMF	02/28/08	
F	REVISED DWGS.	YMF	05/30/08	
G	REVISED PER_MDBCCO	YMF	02/06/09	
H	REVISED DWG	YMF	02/01/10	
J	REVISED DWG	YMF	04/06/10	
K	REVISED NAME	JPD	11/01/13	
L	REVISED DWG	JPD	02/01/15	

TABLE 2

	QUANTITY	DESCRIPTION	MATERIAL	SIZE
1	1	HEAD SEE SHT 6 ASTM A366	.053" MIN. STL	MAX. 100"
2	1	VON DUPRIN (KR) 9954 HDWE MULLION USED W/RIM HDWE	.123" A500 STL	MAX. 96" HEIGHT.
3	2	HINGE JAMB SEE SHT 6 ASTM A366	.053" MIN. STL	MAX. 100" HEIGHT.
4	2	LOCK SIDE REINFORCEMENT CHANNEL	.093" MIN. STL	3.5 X 93.44 MAX
5	2	HINGE SIDE PANIC REINFORCEMENT	.067" MIN. STL	MAX. 20"
6	NOTE 3.	HINGE REINFORCEMENT DOOR ASTM A621	.167" MIN. STL.	1.28" X 9.19"
7	NOTE 3.	HINGE REINFORCEMENT FRAME ASTM A621	.167" MIN. STL.	1.3" X 9.187" MAX.
8	NOTE 3.	4.5" X 4.5" BUTT HINGES (SEE SHT.13)	.134 MIN.	(8) #12-24 MS PER HINGE
		OPTIONAL CONTINUOUS HINGE (SEE SHT.13)	.750" MIN. STL/.12 ALUM	MAX. 95"
9	2	CORE MATERIAL (SHT12): D) HONEYCOMB C) STEEL STIFFENED A/F) POLYSTYRENE B/F) POLYURETHANE/POLYISOCYANURATE E) MINERAL BOARD TEMPERATURE RISE CORE		
10	2	LOCKING HARDWARE - SEE SHEETS 2, 7, 8 & 9		
11	1	THRESHOLD SILL W/BUMPER GASKET (SEE TAB. 3&4 ON SHT.5)		5.50"X0.5"X96"MAX.
		1) ZERO 566A	.125" ALUM. 6063 T5	
		2) NAT'L GUARD 950A	.078" ALUM. 6063 T5	
12	NOTE 2.	JAMB ANCHOR ASTM A924	SEE SHEET 6	
13	NOTE 14.	PS074 WEATHER STRIPPING	TPE	MAX. 24"
14	2	FAS-SEAL DOOR SWEEP	TPE	MAX. 47.66"
15	4	END CHANNEL ASTM A924 (14 GA - INVERTED)		.69" X 1.66" X 47.66" MAX.
16	1	SPLIT ASTRAGAL SET OR Z-ASTRAGAL (NOT REQ'D WITH HOLLOW METAL MULLION)	SEE SHEET 5	
17	AS NEEDED	BUTYL RUBBER OR 100% SILICONE		
18	2	DOOR SLAB (16 OR 14 GA)	SEE SHEET 6	4' X 8' MAX.
19	1	BY ZERO INT'L — DOOR SEAL No.8144S/FS (SEE NOTE 13.)	TPE	MAX. 24"
		BY NGP — DOOR SEAL No.5020		
20	2 NOTE 14.	BY ZERO INT'L — DOOR SWEEP No.539	TPE	MAX. 96"
		BY NGP — DOOR SWEEP No.202N		
21	2	BY ZERO INT'L — DOOR SWEEP No.139	SEE SHEET 5	MAX. 48"
		BY NGP — OMIT		
22	2	BY ZERO INT'L — ADJUSTABLE STOP No.475	TPE	MAX. 48"
		BY NGP — ADJUSTABLE STOP No.170N		
23	2	BY ZERO INT'L — RAIN DRIP No.11	SEE SHEET 5	MAX. 48"
		BY NGP — DRIP CAP No.16A		
24	2	TOP CAP GALV. A60 ASTM A924	.020" MIN. STL	0.5" X 1.76" X 48" MAX.
25	2	IVES 360 12" SURFACE BOLT		
26	1	ASA STRIKE		
27	1	Z-ASTRAGAL	.067" MIN. STL	MAX. 95.5
28	1	HOLLOW METAL MULLION (SINGLE OR DOUBLE RABBET)	SEE SHEET 6	MAX. 96"
29	1	IVES 698/U698 DOOR VIEWER	BRASS	

NOTES:
1. WEATHERSTRIPPING AND SILL - INSTALL PER SHT.5.
2. ANCHOR REQUIREMENTS: SEE SHEET 4 FOR APPROVED ANCHOR INSTALLATION REQUIREMENTS.
3. HINGE REQUIREMENTS:
   FOR DOOR OPENING UP TO 90" HIGH - MIN. (3) BUTT HINGES
   FOR DOOR OPENING OVER 90" - 96" HIGH - MIN. (4) BUTT HINGES
   LOCATIONS: 9.75" FROM RABBET IN HEAD TO CL OF TOP HINGE
   10.38" FROM FLOOR TO CL OF BOTTOM HINGE, EQUALLY SPACED IN BETWEEN.
   HINGE LOCATIONS MAY VARY, MAX SPACING NOT TO EXCEED 35.5"
   FOR APPROVED CONTINUOUS HINGE MODELS SEE SHEET 13.
4. SEE SHEET 6 FOR AVAILABLE STANDARD OPENING SIZES AND SPECIFICATIONS.
5. HARDWARE INSTALLATION AS PER MANUFACTURER'S INSTRUCTIONS.
6. 4" FACE HEAD IS AVAILABLE FOR FRAMES.
7. APPLY CAULK AS NEEDED.
8. SEE SHEET 10 FOR SECTION A-A, SEE SHEET 11 FOR SECTIONS B-B AND C-C.
9. EXIT HARDWARE OPTIONS:
   FOR 98/99 & XP98/99 SERIES - FUNCTIONS E, RX, LX, SS, EL, CX, F
   TRIM: ALL APPLICABLE TRIMS AVAILABLE.
   FOR 88-F SERIES - FUNCTION E
   TRIM: ALL APPLICABLE TRIMS AVAILABLE.
   PN MODEL OFFERED.
   FOR 2670 GUARD-X
   TRIM: ALL APPLICABLE TRIMS AVAILABLE.
   FOR 25-R, 25-C & 25-V SERIES - FUNCTIONS DM,LM, KOR, ED, EL, EA, FSA, FSE, HWEA
   TRIM: ALL APPLICABLE TRIMS AVAILABLE
10. PN MODEL OFFERED.
11. ELECTRICAL INSTALLATION AND FIR RATINGS ARE UNDER SEPARATE APPROVAL AND MUST BE REVIEWED BY CORRESPONDING AUTHORITY.
12. OPTIONAL POWER TRANSFERS, MONITORING SWITCHES, SUPPLEMENTARY MAGNETIC LOCKS MAY BE USED AS ALLOWED BY CODE AND IT DOES NOT EFFECT THE MECHANICAL PROPERTIES OF EXIT DEVICE AND/OR INHIBIT EGRESS, TO BE REVIEWED BY BUILDING OFFICIAL.
13. ITEMS 19 THROUGH 23 REQUIRED ONLY IF WATER INFILTRATION IS NEEDED.
14. QUANTITY WILL INCREASE WHEN USED WITH HOLLOW METAL MULLION. SEE SHT 6 FOR DETAILS.

BEND RADIUS

THIRD ANGLE PROJECTION

DRAWN YMF	DATE 05/20/07
CHECKED	
APPROVED	
ENG. APPVL JPD	10/12/07

SCHLAGE LOCK COMPANY, LLC
6810 HILLSDALE COURT
INDIANAPOLIS, IN 46250

MANUFACTURING FACILITY:
STEELCRAFT
9017 BLUE ASH ROAD
CINCINNATI, OH 45242

TITLE: STEELCRAFT H SERIES DOUBLE FLUSH OUTSWING COMMERCIAL STEEL DOORS WITH AND WITHOUT PANIC EXIT DEVICES

MIAMI-DADE COUNTY PRODUCT APPROVAL
H SERIES FLUSH DOUBLE DOORS OUTSWING CONFIGURATIONS

SIZE	FLAT	DWG NO.	REV
		IRFD07	L

SCALE: NTS | AUTOCAD | SHEET 3 OF 13

A WIRE OR T MASONRY ANCHOR INTO GROUT FILLED FRAME AND BLOCK WALL

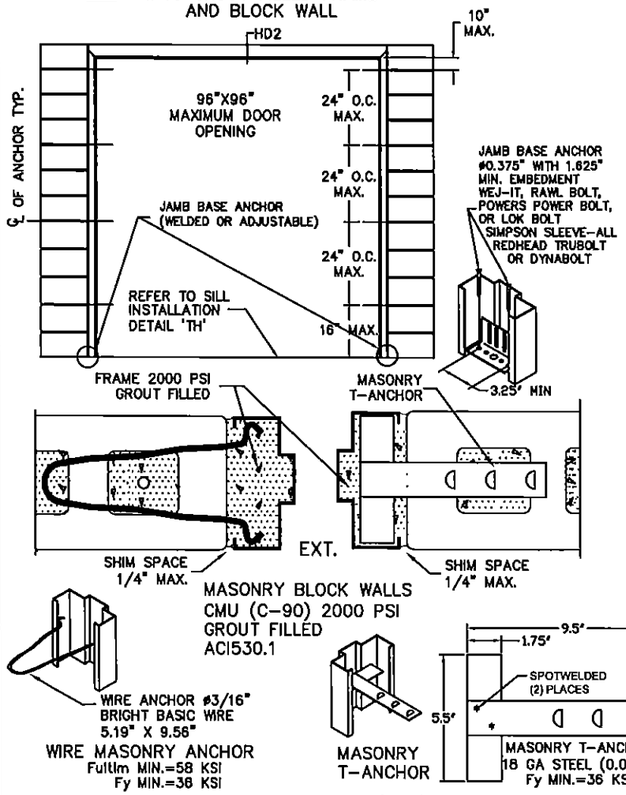

B WOOD STUD ANCHOR

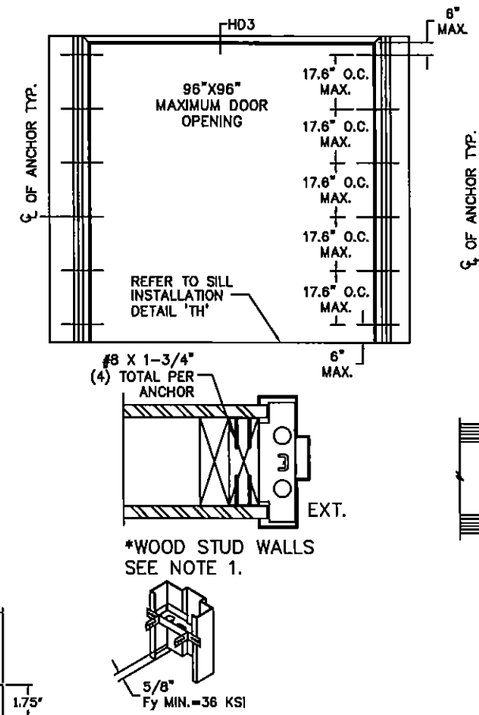

C STEEL STUD ANCHOR

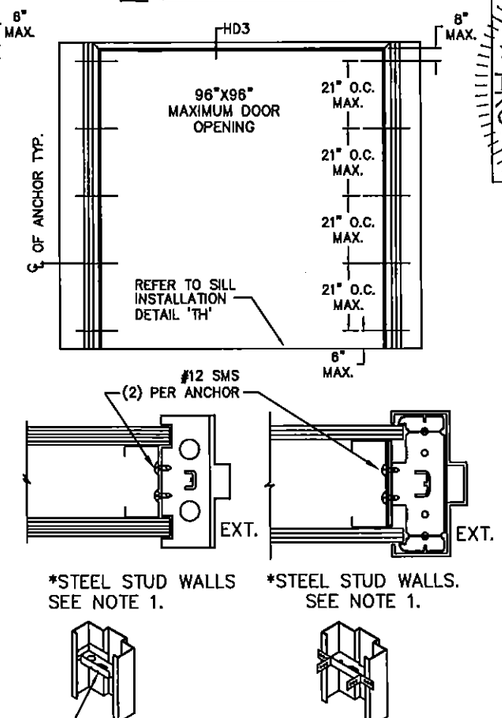

GORDON D. THOMAS LICENSE No. 46730 STATE OF FLORIDA PROFESSIONAL ENGINEER
Gordon Thomas, P.E. 9759 Blossom Court Mason, OH 45040 Florida #46730
Date 1/17/08

REVISIONS				
LTR	DESCRIPTION		DATE	APPROVED
A	APPROVAL DWG	YMF	05/20/07	
C	REVISED DWG	RAP	12/03/07	
D	REVISED DWG	YMF	01/17/08	
F	REVISED DWG	YMF	05/30/08	
G	REVISED PER_MDBCCO	YMF	02/06/09	
H	REVISED DWG	YMF	03/18/09	
J	REVISED DWG	YMF	04/06/10	
K	REVISED NAME	JPD	11/01/13	
L	REVISED DWG	JPD	02/01/15	

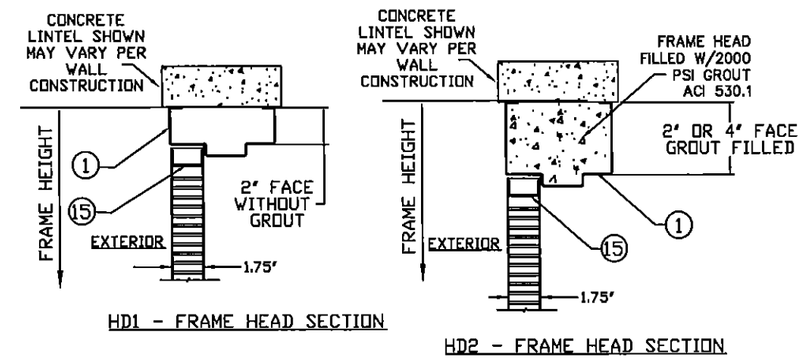

HD1 - FRAME HEAD SECTION

HD2 - FRAME HEAD SECTION

D EXISTING MASONRY ANCHOR (EMA) INTO CONCRETE WALL OR CMU

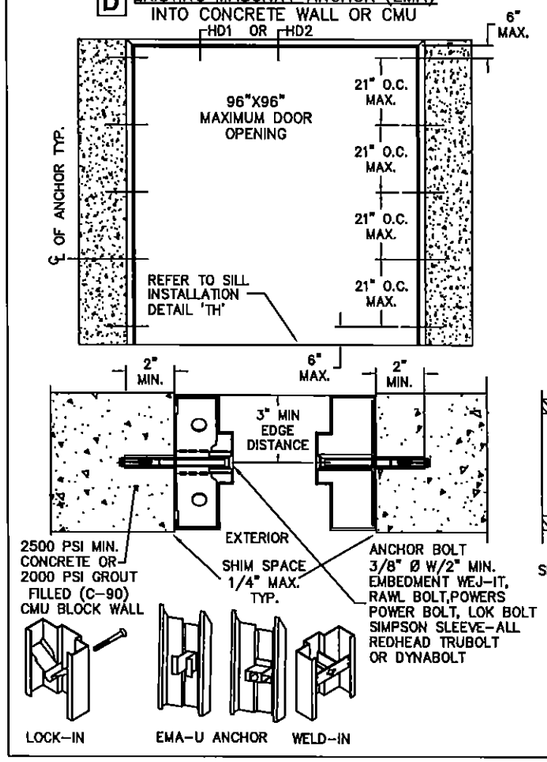

E EXISTING MASONRY ANCHOR (EMA) WITH LAG BOLT INTO WOOD STUD WALL

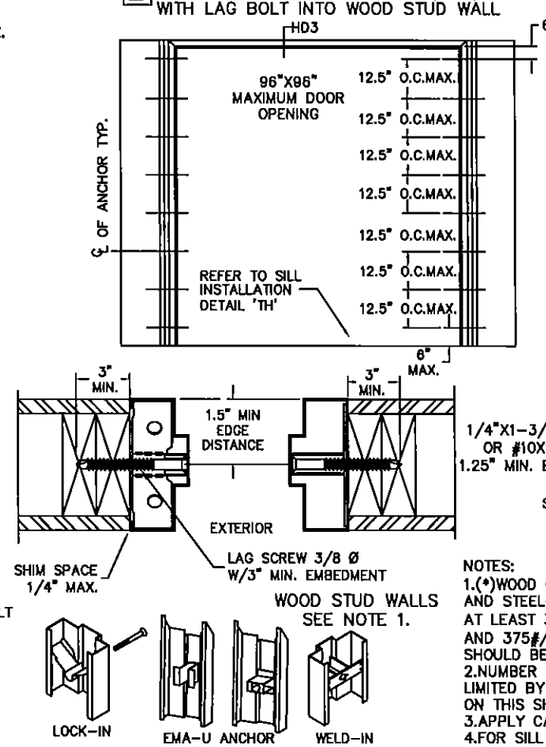

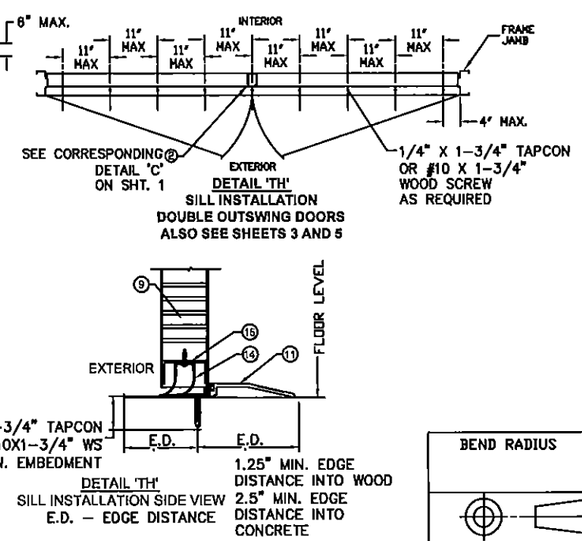

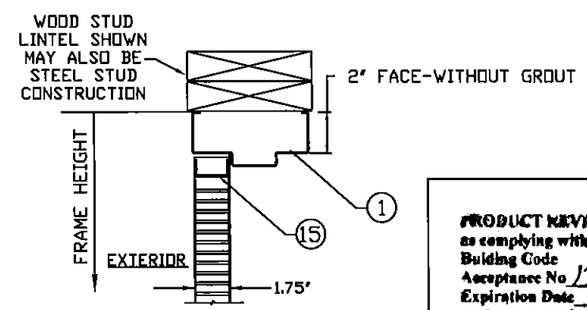

HD3 - FRAME HEAD SECTION

PRODUCT REVISED as complying with the Florida Building Code Acceptance No 13-1217.17 Expiration Date 5/5/16 By Ishay I. Khanda Miami Dade Product Control

NOTES:
1.(*)WOOD OR (*)STEEL STRUCTURAL MEMBERS OF WOOD AND STEEL-STUD WALLS MUST BE DESIGNED TO CARRY AT LEAST 312 #/FT. LOAD FOR ASSEMBLIES RATED @75 PSF, AND 375#/FT. FOR ASSEMBLIES RATED @ 90 PSF, WHICH SHOULD BE VERIFIED BY THE APPROPRIATE OFFICIAL.
2.NUMBER OF ANCHORS FOR VARIOUS OPENING HEIGHTS IS LIMITED BY MAXIMUM DISTANCE BETWEEN ANCHORS, SHOWN ON THIS SHEET.
3.APPLY CAULK AS NEEDED.
4.FOR SILL INSTALLATION AND ANCHORING SEE SHT 3, 4. & 5

BEND RADIUS

THIRD ANGLE PROJECTION

DRAWN	YMF	DATE 05/20/07
CHECKED		
APPROVED		
ENG. APPVL	JPD	10/12/07

SCHLAGE LOCK COMPANY, LLC
6810 HILLSDALE COURT
INDIANAPOLIS, IN 46250

MANUFACTURING FACILITY:
STEELCRAFT
9017 BLUE ASH ROAD
CINCINNATI, OH 45242

TITLE: STEELCRAFT H SERIES DOUBLE FLUSH OUTSWING COMMERCIAL STEEL DOORS WITH AND WITHOUT PANIC EXIT DEVICES
ANCHOR DETAILS / INSTALLATION CONDITIONS

SIZE	FLAT	DWG NO.	IRFD07	REV L
SCALE: NTS	AUTOCAD		SHEET 4 OF 13	

TABLE 3.

PERIMETER SEAL HARDWARE WHEN WATER INFILTRATION REQUIREMENT DOES APPLY

ITEM NUMBER SHT 3. TABLE 2	DESCRIPTION	MAX. ALLOWABLE DESIGN PRESSURE RATING SEE SHEETS 1 & 2	MODEL No./ MANUFACTURER	PART DETAIL	INSTALLATION DETAIL
11	THRESHOLD	+75	566/ZERO INT'L	'T1'	'P1'
			950/NGP	'T2'	'P2'
14	FAS-SEAL SWEEP	+75	STEELCRAFT	'S'	'P1' & 'P2'
16	SPLIT ASTRAGAL	+75	328/ZERO INT'L	'GG1'	'N3'
			137/NGP	'GG2'	
19 OR 13	SELF ADHESIVE DOOR SEAL	+75	8144S/FS/ZERO INT'L	'U'	'M' & 'N'
			PS074/STEELCRAFT	'Q'	
20	DOOR SWEEP	+75	539/ZERO INT'L	'W1'	'N'
			202N/NGP	'W2'	
21	DOOR SWEEP	+75	139/ZERO INT'L	'X'	'P1'
22	ADJUSTABLE STOP	+75	475/ZERO INT'L	'Y1'	'M'
			170N/NGP	'Y2'	
23	RAIN DRIP CAP	+75	11/ZERO INT'L	'Z1'	'P1'
			16A/NGP	'Z2'	'P2'

TABLE 4.

PERIMETER SEAL HARDWARE WHEN WATER INFILTRATION REQUIREMENT DOES NOT APPLY

ITEM NUMBER SHT. 3 TABLE 2	DESCRIPTION	MODEL No. MANUFACTURER	PART DETAIL	INSTALLATION DETAIL
11	THRESHOLD	566 BY ZERO INT'L	'T1'	'K'
		950 BY NATIONAL GUARD	'T2'	
14	FAS-SEAL DOOR SWEEP	STEELCRAFT	'S'	'K'
16	SPLIT ASTRAGAL	328 BY ZERO	'GG1'	'N3'
		137 BY NGP	'GG2'	
13	PS-074 SELF ADHESIVE WEATHERSTRIPPING	STEELCRAFT	'Q'	'J' & 'L'
24	DOOR TOP CAP	STEELCRAFT	'R'	OPTIONAL

*SEE SHEETS 1 & 2 FOR DESIGN PRESSURE RATINGS.

GORDON D. THOMAS LICENSE No. 46718 STATE OF FLORIDA PROFESSIONAL ENGINEER
Gordon Thomas P.E. Date
3759 Blossom Court
Mason, OH 45040
Florida # 46718

REVISIONS				
LTR	DESCRIPTION		DATE	APPROVED
A	APPROVAL DWG	YMF	05/20/07	
D	REVISED DWG	YMF	01/07/07	
E	REVISED DWG	YMF	04/09/08	
F	REVISED DWG	YMF	06/02/08	
G	REVISED PER_MDBCCO	YMF	02/06/09	
H	REVISED DWG	YMF	03/18/09	
J	REVISED PER_MDBCCO	YMF	04/06/10	
K	REVISED NAME	JPD	11/01/13	
L	REVISED DWG	JPD	02/01/15	

PERIMETER SEAL INSTALLATION DETAILS WHEN WATER INFILTRATION REQUIREMENTS DO NOT APPLY

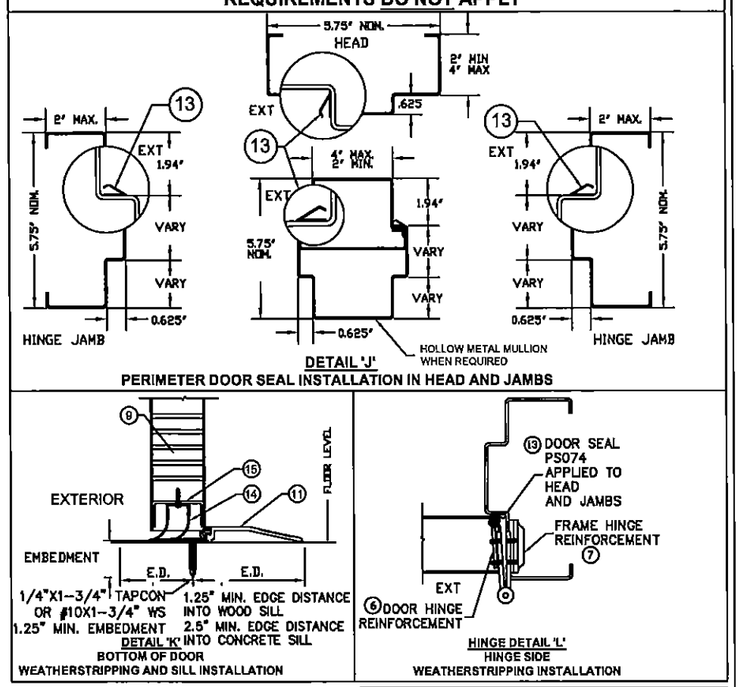

PART DETAILS

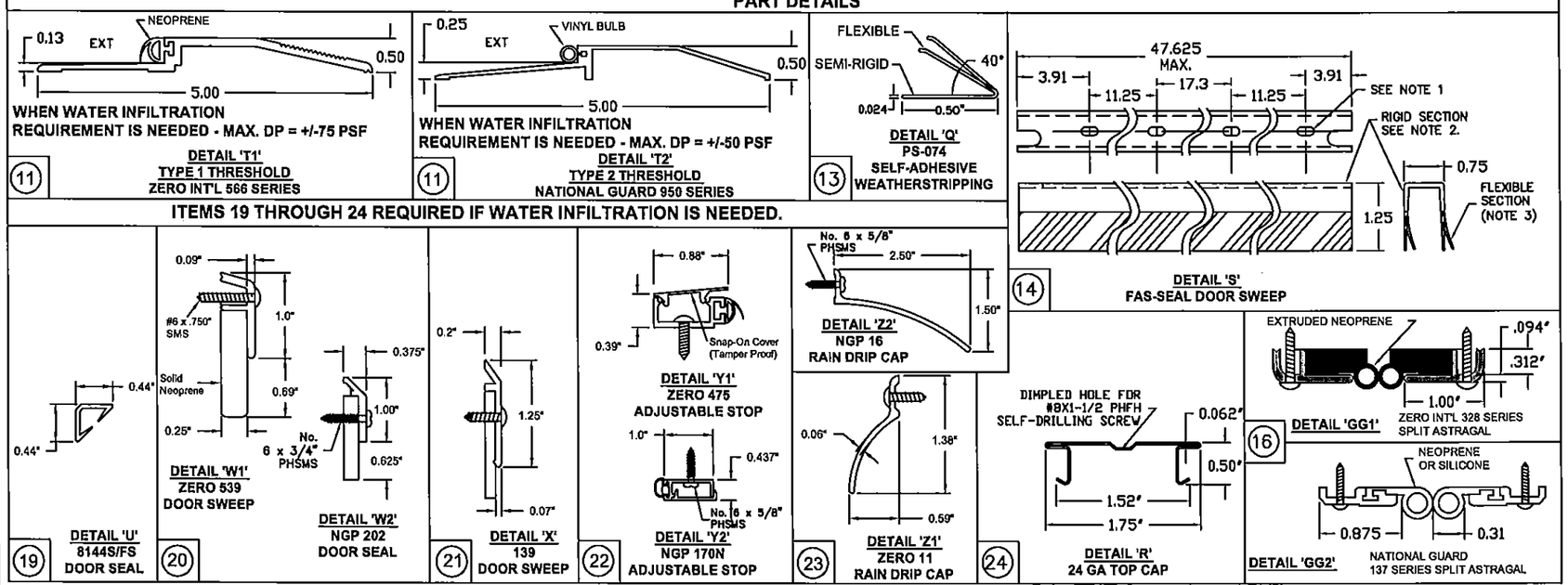

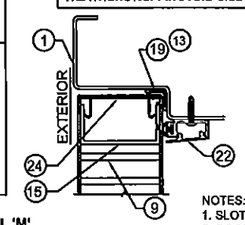

DETAIL 'M'
TOP OF DOOR/HEAD WEATHERSTRIPPING
WHEN WATER INFILTRATION REQUIREMENTS APPLY

PRODUCT REVISED as complying with the Florida Building Code
Acceptance No 13-1217.17
Expiration Date 5/5/16
By [signature]
Miami Dade Product Control

NOTES:
1. SLOT LOCATIONS MAY VARY WITH DIFFERENT DOOR WIDTH.
2. DOOR SWEEP RIGID SECTION IS MADE OF PRO-FAX #PD-199 POLYPROPYLENE HOMOPOLYMER.
3. DOOR SWEEP FLEXIBLE SECTION IS MADE OF SANTOPRENE #101-73
4. FAS-SEAL DOOR SWEEP (14), AND THRESHOLD (11) ARE REQUIRED FOR ALL INSTALLATIONS.

PERIMETER SEAL INSTALLATION DETAILS WHEN WATER INFILTRATION REQUIREMENTS APPLY (SEE SHEETS 1 & 2 FOR MAX DESIGN PRESSURE)

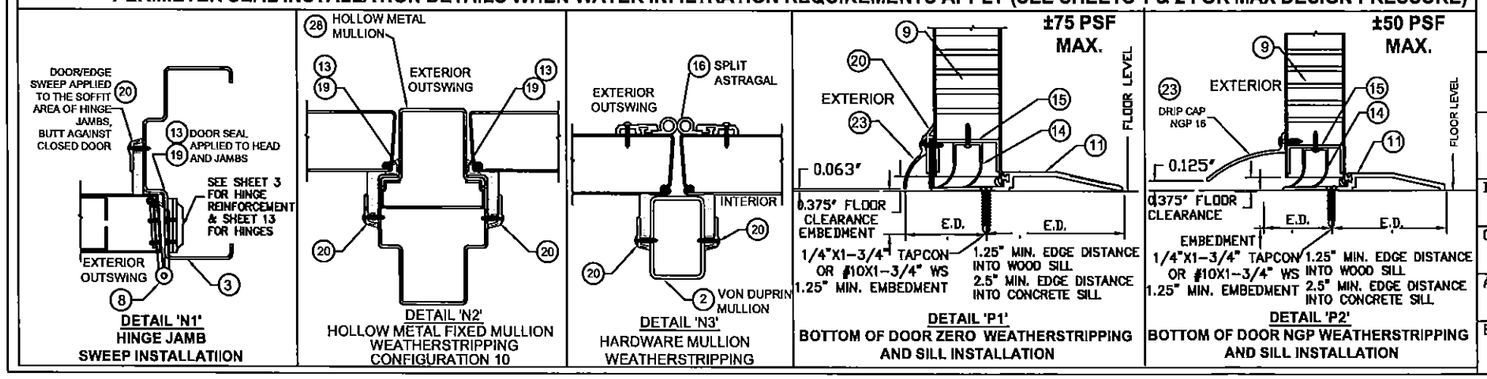

BEND RADIUS

THIRD ANGLE PROJECTION

DRAWN	YMF	DATE 05/20/07
CHECKED		
APPROVED		
ENG. APPVL	JPD	10/11/07

SCHLAGE LOCK COMPANY, LLC
6810 HILLSDALE COURT
INDIANAPOLIS, IN 46250

MANUFACTURING FACILITY:
STEELCRAFT
9017 BLUE ASH ROAD
CINCINNATI, OH 45242

TITLE: STEELCRAFT H SERIES DOUBLE FLUSH OUTSWING COMMERCIAL STEEL DOORS WITH AND WITHOUT PANIC EXIT DEVICES

DOUBLE FLUSH DOOR PERIMETER SEAL HARDWARE.

SIZE	FLAT	DWG NO.	REV
		IRFD07	L
SCALE: NTS	AUTOCAD	SHEET 5 of 13	

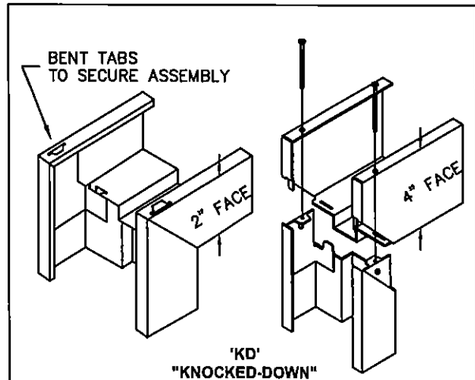

'KD'
"KNOCKED-DOWN"
ASSEMBLY

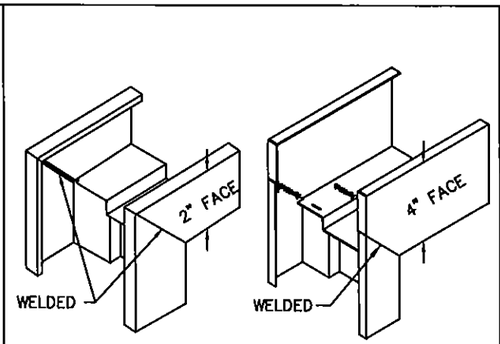

'SUA'
SET-UP AND ARC-WELDED
ASSEMBLY

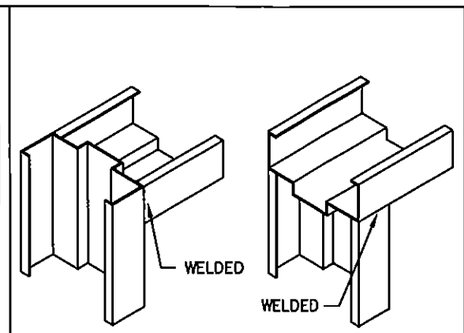

HEAD NOTCHED
AND BUTTED BETWEEN JAMBS

HEAD SITS ON TOP
OF NOTCHED JAMBS

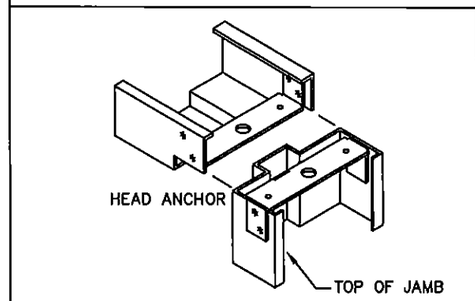

HEAD NOTCHED
AND BOLTED ON TOP OF JAMBS

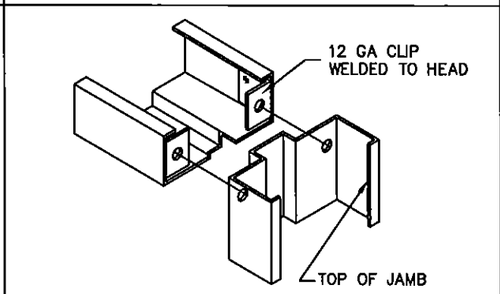

HEAD NOTCHED
AND BOLTED BETWEEN JAMBS

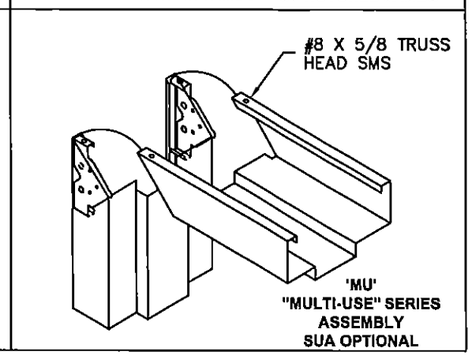

'MU'
"MULTI-USE" SERIES
ASSEMBLY
SUA OPTIONAL

GORDON D. THOMAS
LICENSE
37018
STATE OF FLORIDA
PROFESSIONAL ENGINEER

Gordon Thomas, P.E.
3759 Blossom Court
Mason, OH 45040
Florida # 46718

Date

REVISIONS

LTR	DESCRIPTION			DATE	APPROVED
A	APPROVAL	DWG	YMF	05/20/07	
B	REVISED	DWG	RAP	10/12/07	
C	REVISED	DWG	RAP	12/03/07	
D	REVISED	DWG	YMF	01/23/08	
E	REVISED	DWG	YMF	04/09/08	
F	REVISED	DWG	YMF	06/02/08	
G	REVISED	PER_MDBCCO	YMF	02/06/09	
H	REVISED	DWG	YMF	03/18/09	
J	REVISED	DWG	YMF	04/06/10	
K	REVISED	NAME	JPD	11/01/13	
L	REVISED	DWG	JPD	02/01/15	

TABLE 6. AVAILABLE STEELCRAFT FRAME CONFIGURATIONS

FRAME SERIES	JAMB DEPTH	MAX. OPENING SIZE		MATERIAL	
		WIDTH	HEIGHT	DESCR.	GA./MIN. THK
F	5.75" NOM.	8'0"	8'0"	CRS/HRS GALV	16/.053" 14/.067" 12/.099"
				STAINLESS STEEL	16/.053"
MU	5.75" NOM.	8'0"	8'0"	CRS/HRS GALV	16/.053" 14/.067"

TABLE 7. STEEL MECHANICAL PROPERTIES

MATERIAL	ASTM REF.	YIELD KSi	TENSILE KSi
CRS	A366	MIN. 30.1	MIN. 44.7
HRS	A1011		
GALV: A60	A924		
SS: 304,306	A240	MIN. 31.2	MIN. 73.2

TABLE 5. AVAILABLE STEELCRAFT DOOR CONFIGURATIONS

CORE MATERIAL PER SHT.12	MAXIMUM OPENING SIZE		SKIN MATERIAL	
	WIDTH	HEIGHT	DESCR.	GA./MIN. THK
HONEYCOMB POLYSTYRENE POLYURETHANE (POLYISOCYANURATE) TEMPERATURE RISE STEEL STIFFENED	VARIES SEE SHEET 2 TABLE 1		CRS GALV	16/.053" 14/.067"
HONEYCOMB POLYSTYRENE POLYURETHANE	VARIES SEE SHEET 2 TABLE 1		STAINLESS STEEL	16/.053"

TYPICAL FRAME PROFILE
DOUBLE RABBET

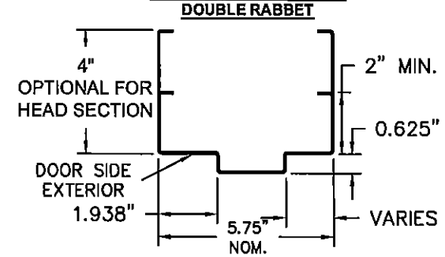

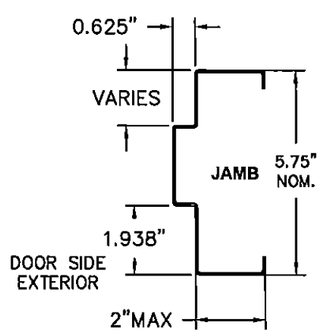

OPTIONAL FRAME PROFILE
SINGLE RABBET

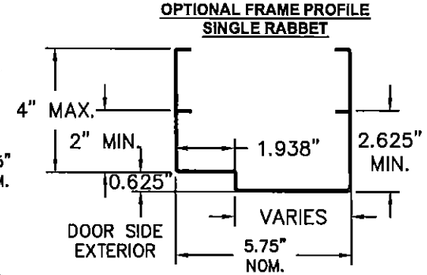

AVAILABLE DOOR PANEL CONFIGURATIONS

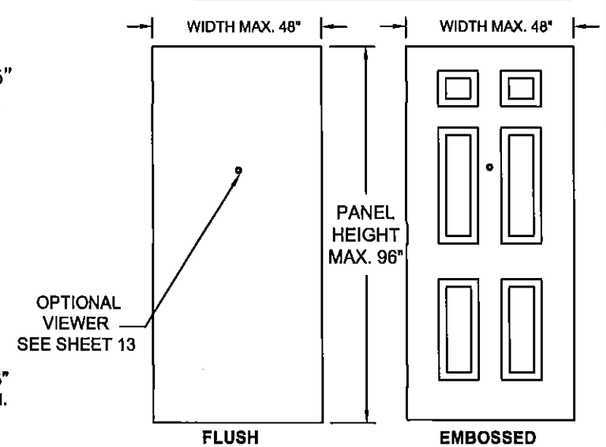

NOTES:

1. DOOR CONSTRUCTION
1.1. NOMINAL DOOR THICKNESS – 1 3/4"
1.2. DOOR SIZE MAY VARY, SUBJECTED TO COMPLIANCE WITH FLORIDA BUILDING CODE AND PRODUCT AVAILABILITY FROM MANUFACTURER (SEE SHEET 2 FOR AVAILABLE HARDWARE)
1.3. PEEP–HOLES AND DOOR VIEWERS ARE PERMITTED TO BE USED IN DOORS WITH A MAXIMUM DESIGN PRESSURE OF +/– 75 PSF OR LESS. MAXIMUM 9/16" DIAMETER HOLE THROUGH DOOR FOR VIEWER INSTALLATION.
2. FRAME CONSTRUCTION
2.1. NOMINAL JAMB DEPTH – 5 3/4", STOP HEIGHT – 5/8"
2.2. FRAMES AVAILABLE AS FLUSH (F–SERIES) AND MULT–USE (MU–SERIES) (SEE TABLE 6)
3. FOR MATERIAL SPECIFICATIONS REFERENCE SEE TABLE 7.

(28) FIXED HOLLOW
METAL MULLION
DOUBLE RABBET

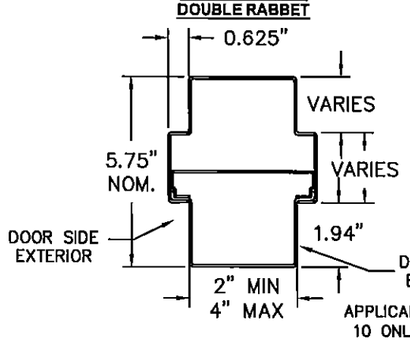

(28) FIXED HOLLOW
METAL MULLION
SINGLE RABBET

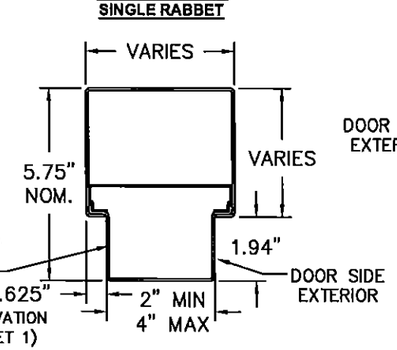

SEE NOTE 4.

APPLICABLE TO ELEVATION
10 ONLY (SEE SHEET 1)

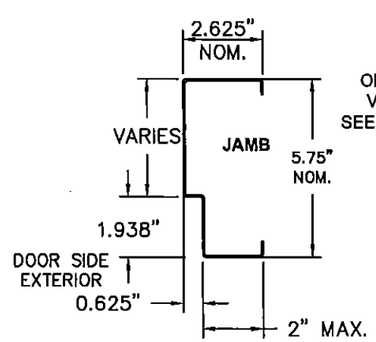

MATERIAL IS PER TABLE 7. MINIMUM THICKNESS IS 0.053" (16 Ga.)
MINIMUM YIELD STRENGTH = 58,000 PSI
MINIMUM TENSILE STRENGTH = 45,700 PSI

PRODUCT REVIEWED
as complying with the Florida
Building Code
Acceptance No 13-1217.17
Expiration Date 5/5/16
By Ishag I. Chan
Miami Dade Product Control

BEND RADIUS

THIRD ANGLE PROJECTION

DRAWN	YMF	05/20/07
CHECKED		
APPROVED		
ENG. APPVL	JPD	10/12/07

SCHLAGE LOCK COMPANY, LLC
6810 HILLSDALE COURT
INDIANAPOLIS, IN 46250

MANUFACTURING FACILITY:
STEELCRAFT
9017 BLUE ASH ROAD
CINCINNATI, OH 45242

TITLE: STEELCRAFT H SERIES DOUBLE FLUSH OUTSWING COMMERCIAL STEEL DOORS WITH AND WITHOUT PANIC EXIT DEVICES

FRAME PROFILE, CORNER DETAILS AND DOOR FRAME MATERIAL, AND SIZE OPTIONS

SIZE	FLAT	DWG NO.	REV
		IRFD07	L

SCALE: NTS | AUTOCAD | SHEET 6 OF 13

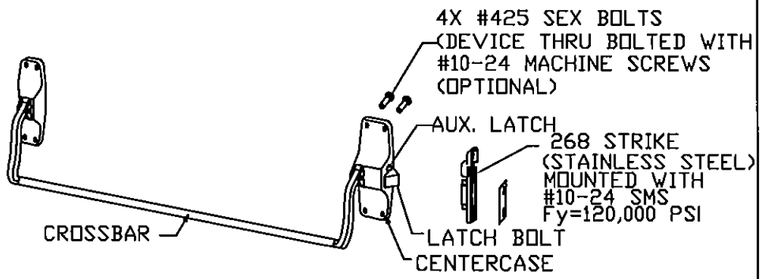

VON DUPRIN 88-F RIM DEVICE
USED IN CONFIRATION: 6

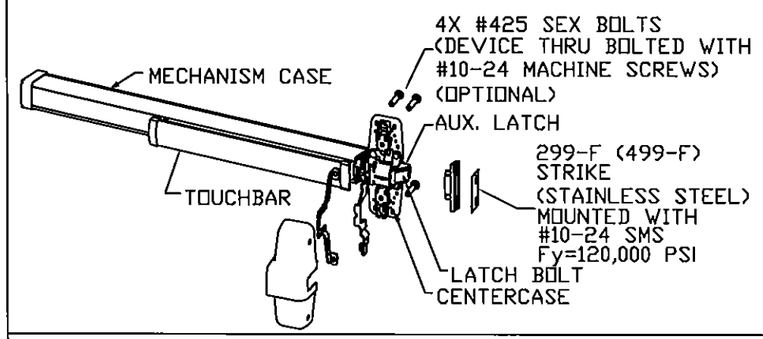

VON DUPRIN 98/99 (F) RIM DEVICE
USED IN CONFIGURATION: 6

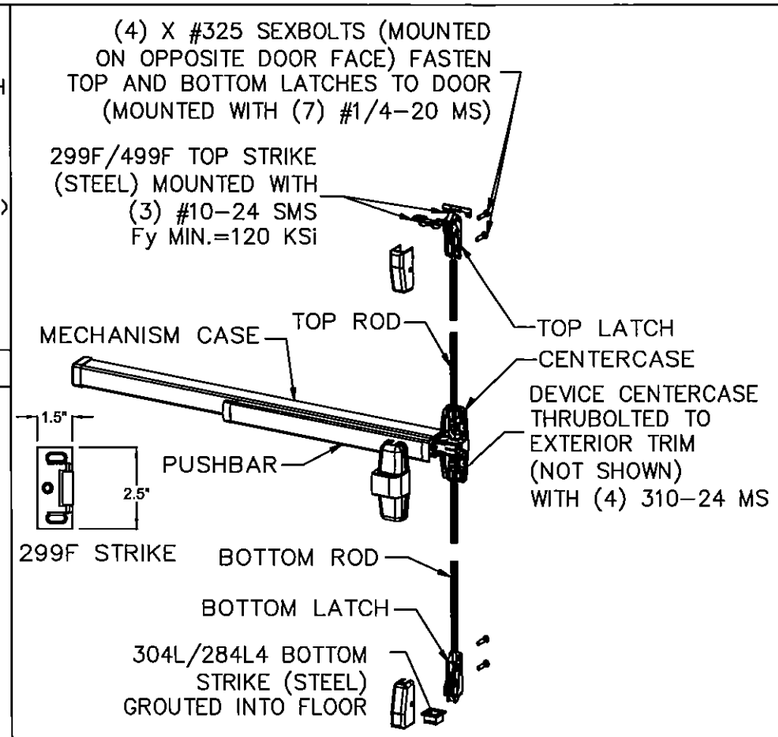

VON DUPRIN 98/9927 (F) SURFACE VERTICAL ROD EXIT DEVICE
USED IN CONFIGURATION: 7

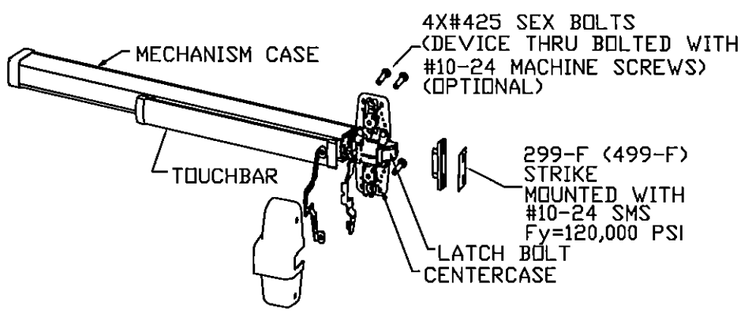

VON DUPRIN XP98/99 (F)
USED IN CONFIGURATION: 5

PRODUCT REVISED
as complying with the Florida
Building Code
Acceptance No. 13-1217.17
Expiration Date 5/5/16
By [illegible]
[illegible] President General

REVISIONS				
LTR	DESCRIPTION		DATE	APPROVED
D	REVISED DWG	YMF	01/23/08	
E	REVISED DWG	YMF	04/09/08	
F	REVISED DWG	YMF	06/02/08	
G	REVISED PER_MDBCCO	YMF	02/06/09	
H	REVISED DWG	YMF	03/18/09	
J	REVISED PER_MDBCCO	YMF	04/06/10	
K	REVISED NAME	JPD	11/01/13	
L	REVISED DWG	JPD	02/01/15	

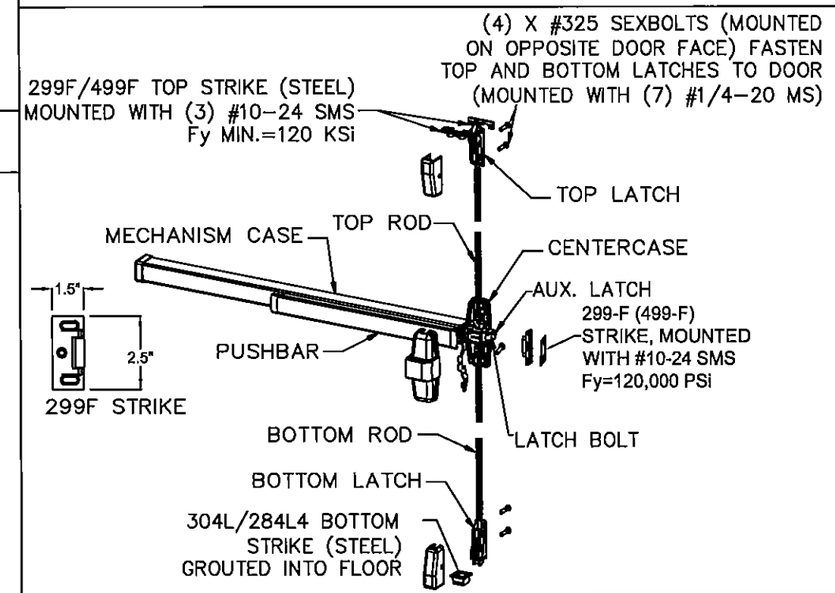

VON DUPRIN 98/9957 (F) THREE-POINT LATCHING DEVICE
USED IN CONFIGURATIONS: 9 & 10

NOTES:
1. ELECTRICAL FUNCTIONS/INSTALLATION AND FIRE RATINGS ARE NOT PART OF THIS APPROVAL AND TO BE REVIEWED AND APPROVED BY BUILDING OFFICIAL.
2. EXIT HARDWARE OPTIONS:
FOR 98/99 & XP98/99 SERIES - FUNCTIONS E, RX, LX, SS, EL, CX, F; TRIM: ALL APPLICABLE TRIMS AVAILABLE.
FOR 88-F SERIES - FUNCTION E; TRIM: ALL APPLICABLE TRIMS AVAILABLE. PN MODEL OFFERED.
FOR 33/35-F SERIES - FUNCTIONS RX, LX, EL, SS; TRIM: ALL APPLICABLE TRIMS AVAILABLE.
FOR 2670 GUARD-X; TRIM: ALL APPLICABLE TRIMS AVAILABLE.
TRIM: ALL APPLICABLE TRIMS AVAILABLE.

GORDON D. THOMAS
LICENSE
No. 46718
STATE OF FLORIDA
PROFESSIONAL ENGINEER
Gordon Thomas, P.E.
3759 Blossom Court
Mason, OH 45040
Florida # 46718
Date

BEND RADIUS

THIRD ANGLE PROJECTION

DRAWN YMF	DATE 05/20/07		
CHECKED	CDATE		
APPROVED	ADATE		
ENG. APPVL JPD	EDATE 10/12/07		

SCHLAGE LOCK COMPANY, LLC
6810 HILLSDALE COURT
INDIANAPOLIS, IN 46250

MANUFACTURING FACILITY:
STEELCRAFT
9017 BLUE ASH ROAD
CINCINNATI, OH 45242

TITLE: STEELCRAFT H SERIES DOUBLE FLUSH OUTSWING COMMERCIAL STEEL DOORS WITH AND WITHOUT PANIC EXIT DEVICES.

EXIT HARDWARE FOR FLUSH DOUBLE DOORS.

SIZE	FLAT	DWG NO.	REV
		IRFD07	L
SCALE: NTS	AUTOCAD		SHEET 7 OF 13

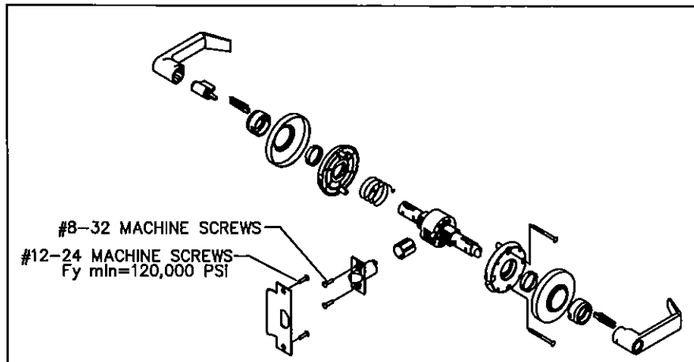

SCHLAGE AL SERIES
CYLINDRICAL LEVER LOCKSET WITH 1/2" THROW LATCH
USED IN CONFIGURATION: 2

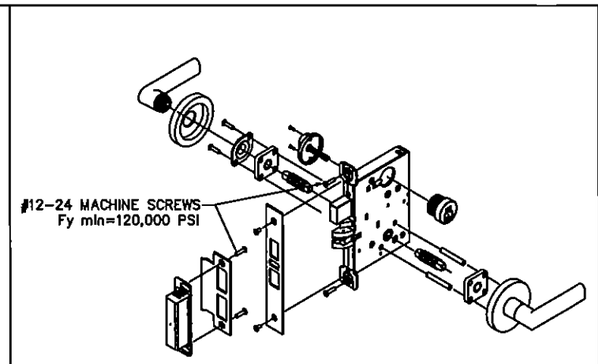

SCHLAGE L/LV 9400 SERIES MORTISE LOCKSET
W/ DEADBOLT. USED IN CONFIGURATION: 1

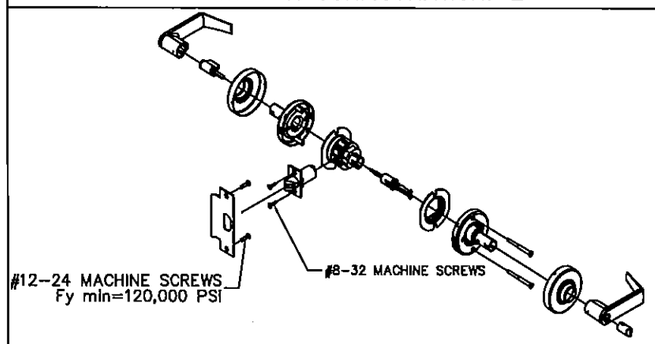

SCHLAGE D/ND-SERIES CYLINDRICAL LEVER LOCKSET.
USED IN CONFIGURATIONS: 3 & 4

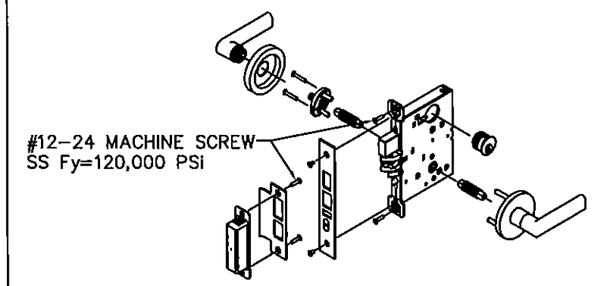

FALCON M-SERIES MORTISE LOCKSET W/ DEADBOLT
USED IN CONFIGURATION: 1

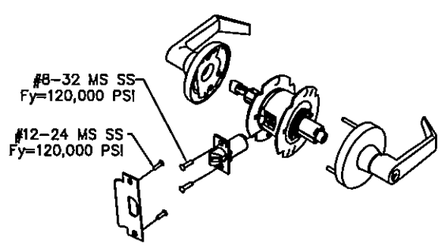

FALCON, T-SERIES CYLINDRICAL LEVER LOCKSET
USED IN CONFIGURATION: 4

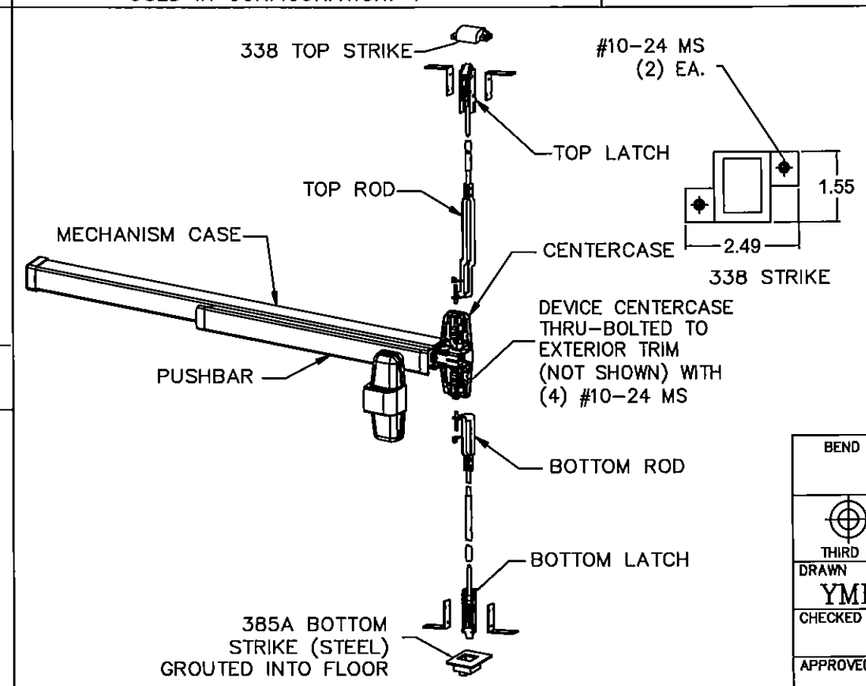

VON DUPRIN 98/9947-F CONCEALED VERTICAL ROD EXIT DEVICE
USED IN CONFIGURATION: 8

NOTES:
1. ELECTRICAL FUNCTIONS/INSTALLATION AND FIRE RATINGS ARE NOT PART OF THIS APPROVAL AND TO BE REVIEWED AND APPROVED BY BUILDING OFFICIAL.

2. EXIT HARDWARE OPTIONS:
FOR 98/99 SERIES - FUNCTIONS E, RX, LX, SS, EL, CX, F;
TRIM: ALL APPLICABLE TRIMS AVAILABLE.
PN MODEL OFFERED.

GORDON D. THOMAS
LICENSE
No. 46718
STATE OF FLORIDA
PROFESSIONAL ENGINEER

Gordon Thomas, P.E.
3759 Blossom Court
Mason, OH 45040
Florida #46718

3/17/05
Date

PRODUCT REVIEWED
as complying with the Florida
Building Code
Acceptance No. 13-1217.17
Expiration Date 5/5/16
By Ishwar L. Chand
Submit Date: Product Control

REVISIONS

LTR	DESCRIPTION			DATE	APPROVED
A	APPROVAL	DWG	YMF	05/20/07	
C	REVISED	DWG	RAP	12/03/07	
D	REVISED	DWG	RMP	02/03/08	
E	REVISED	DWG	YMF	04/09/08	
F	REVISED	DWG	YMF	06/02/08	
G	REVISED	DWG_MDBCCO	YMF	02/06/09	
H	REVISED	DWG	YMF	03/18/09	
J	REVISED	PER_MDBCCO	YMF	04/06/10	
K	REVISED	NAME	JPD	11/01/13	
L	REVISED	DWG	JPD	02/01/15	

BEND RADIUS

THIRD ANGLE PROJECTION

DRAWN YMF	DATE 05/20/07
CHECKED	
APPROVED	
ENG. APPVL JPD	10/12/07

SCHLAGE LOCK COMPANY, LLC
6810 HILLSDALE COURT
INDIANAPOLIS, IN 46250

MANUFACTURING FACILITY:
STEELCRAFT
9017 BLUE ASH ROAD
CINCINNATI, OH 45242

TITLE: STEELCRAFT H SERIES DOUBLE FLUSH COMMERCIAL STEEL DOORS WITH AND WITHOUT PANIC EXIT DEVICES

HARDWARE FOR FLUSH DOUBLE DOORS.

SIZE	FLAT	DWG NO.	REV
		IRFD07	L

SCALE: NTS | AUTOCAD | SHEET 8 OF 13

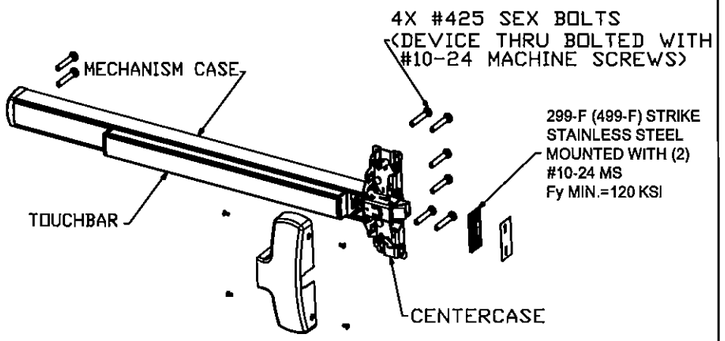

FALCON (F)25-R **RIM EXIT DEVICE**
USED IN **DOOR CONFIGURATION 11** (SEE SHT.1)

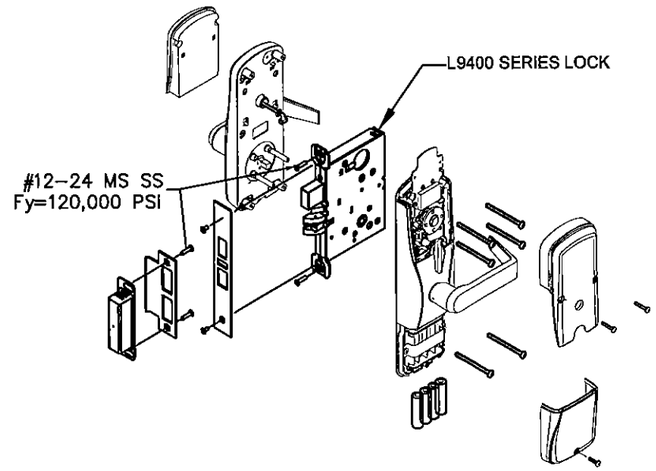

SCHLAGE CO/AD MD SERIES MORTISE LOCKSET WITH DEADBOLT
USED IN CONFIGURATIONS: 1 (SEE SHT.1)

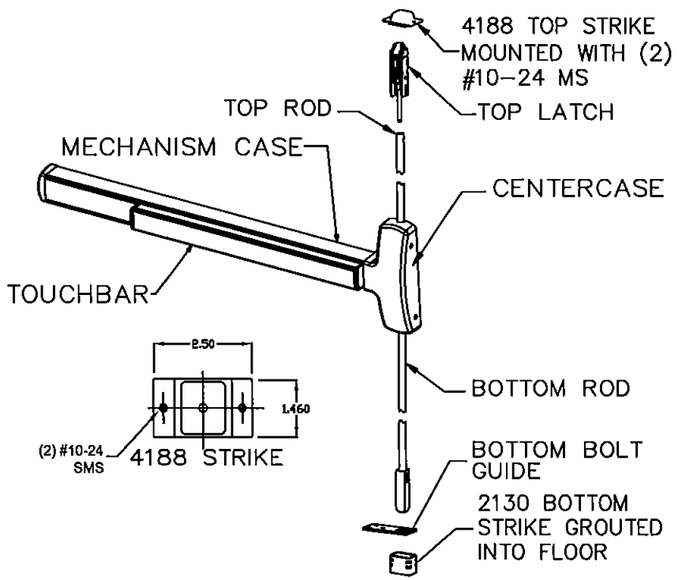

FALCON F-25-C **CONCEALED VERTICAL ROD EXIT DEVICE**
USED IN **DOOR CONFIGURATION 8** (SEE SHT.1)

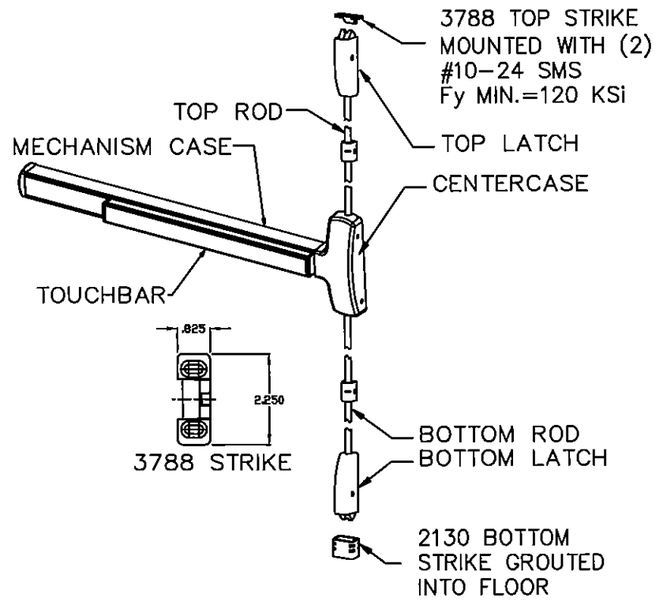

FALCON (F)25-V **SURFACE VERTICAL ROD EXIT DEVICE**
USED IN **DOOR CONFIGURATION 7** (SEE SHT.1)

GORDON D. THOMAS
LICENSE
No. 46718
STATE OF FLORIDA
PROFESSIONAL ENGINEER

Gordon Thomas, P.E. Date
3788 Blossom Court
Mason, OH 45040
Florida #46718

REVISIONS				
LTR	DESCRIPTION		DATE	APPROVED
A	APPROVAL DWG	YMF	05/20/07	
B	REVISED DWG	RAP	10/08/07	
C	REVISED DWG	RAP	12/03/07	
D	REVISED DWG	YMF	01/23/08	
E	REVISED DWG	YMF	04/09/08	
F	REVISED DWG	YMF	06/02/08	
G	REVISED PER_MDBCCO	YMF	02/06/09	
H	REVISED DWG	YMF	03/18/09	
J	REVISED PER_MDBCCO	YMF	04/06/10	
K	REVISED NAME	JPD	11/01/13	
L	REVISED DWG	JPD	02/01/15	

PRODUCT REVIEWED
as complying with the Florida
Building Code
Acceptance No 13-1217.17
Expiration Date 5/5/16
By Shing L. Chen
Miami Dade Product Control

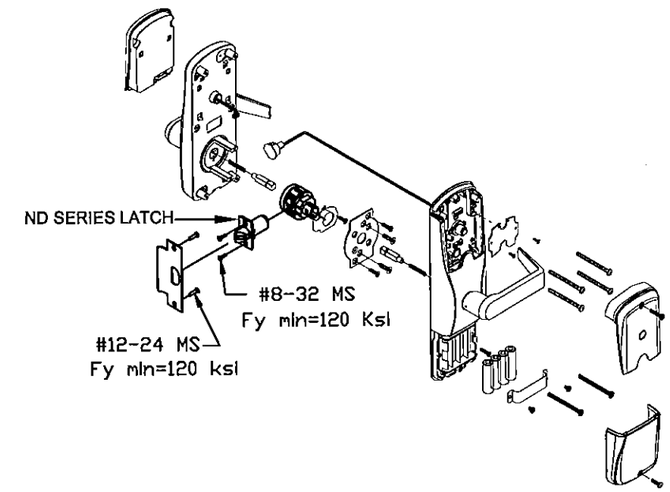

SCHLAGE CO/AD CY SERIES CYLINDRICAL LOCKSET
USED IN CONFIGURATIONS: 3&4 (SEE SHT.1)

NOTES:
ELECTRICAL FUNCTIONS/INSTALLATION AND FIRE RATINGS ARE NOT PART OF THIS APPROVAL AND TO BE REVIEWED AND APPROVED BY BUILDING OFFICIAL.

EXIT HARDWARE OPTIONS:
F-25-C & (F)25-V (F) 25-R SERIES - FUNCTIONS AE, DM, LM, LK, KOR, ED, EL, EA, FSA, FSE, HWEA
TRIMS: ALL APPLICABLE TRIMS AVAILABLE

BEND RADIUS

THIRD ANGLE PROJECTION

DRAWN YMF	DATE 05/20/07
CHECKED	CDATE
APPROVED	ADATE
ENG. APPVL JPD	EDATE 10/12/07

SCHLAGE LOCK COMPANY, LLC
6810 HILLSDALE COURT
INDIANAPOLIS, IN 46250

MANUFACTURING FACILITY:
STEELCRAFT
9017 BLUE ASH ROAD
CINCINNATI, OH 45242

TITLE: STEELCRAFT H SERIES DOUBLE FLUSH OUTSWING COMMERCIAL STEEL DOORS WITH AND WITHOUT PANIC EXIT DEVICES

HARDWARE FOR FLUSH DOUBLE DOORS.

SIZE	FLAT	DWG NO. IRFD07	REV L
SCALE: NTS	AUTOCAD		SHEET 9 OF 13

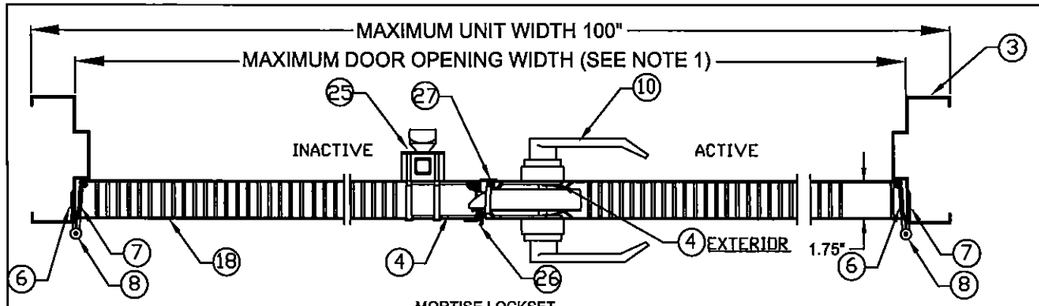

MORTISE LOCKSET
SECTION A-1
(SEE SHT.1)

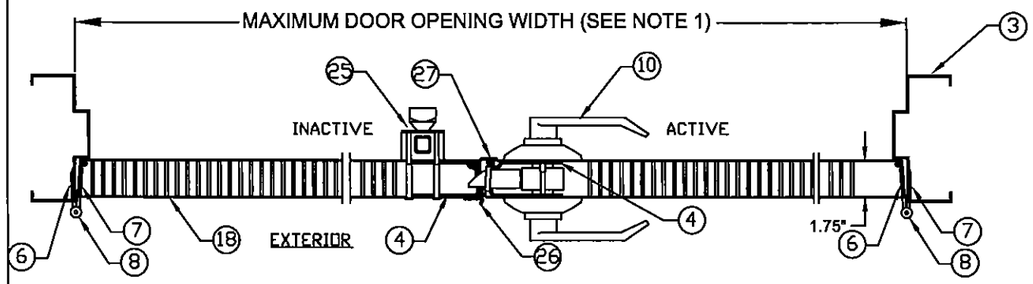

CYLINDRICAL LOCKSET
SECTIONS A-2, A-3, A-4
(SEE SHT.1)

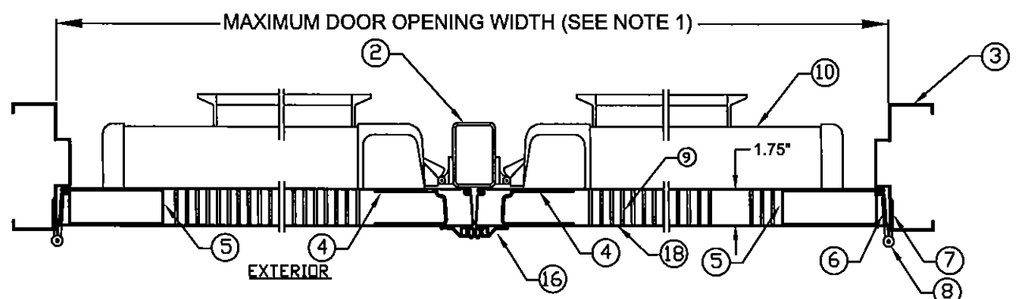

RIM PANIC DEVICE
VON DUPRIN HARDWARE MULLION. SECTION A-5, A-6, A-11
(SEE SHT.1)

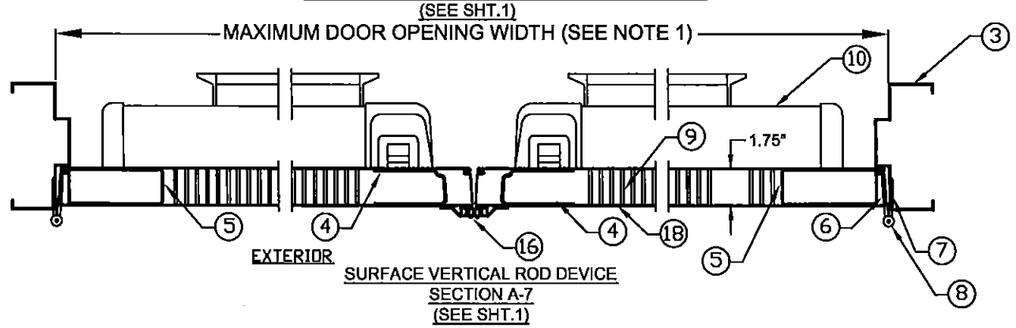

SURFACE VERTICAL ROD DEVICE
SECTION A-7
(SEE SHT.1)

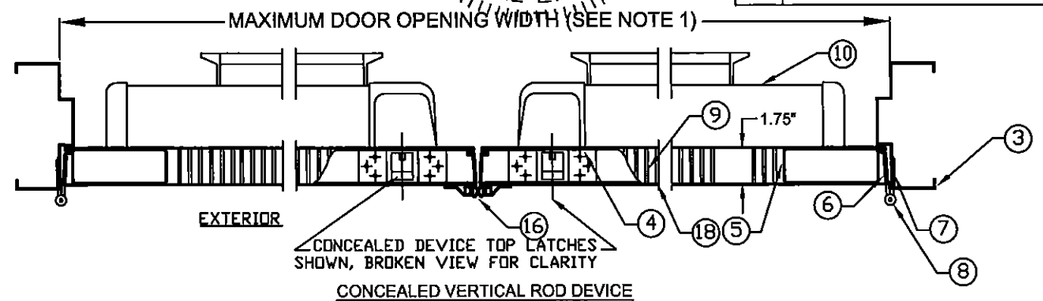

CONCEALED VERTICAL ROD DEVICE
SECTION A-8 (SEE SHT.1)

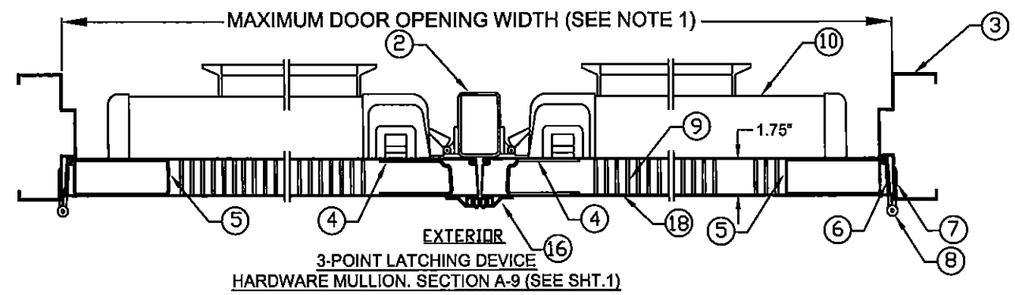

3-POINT LATCHING DEVICE
HARDWARE MULLION. SECTION A-9 (SEE SHT.1)

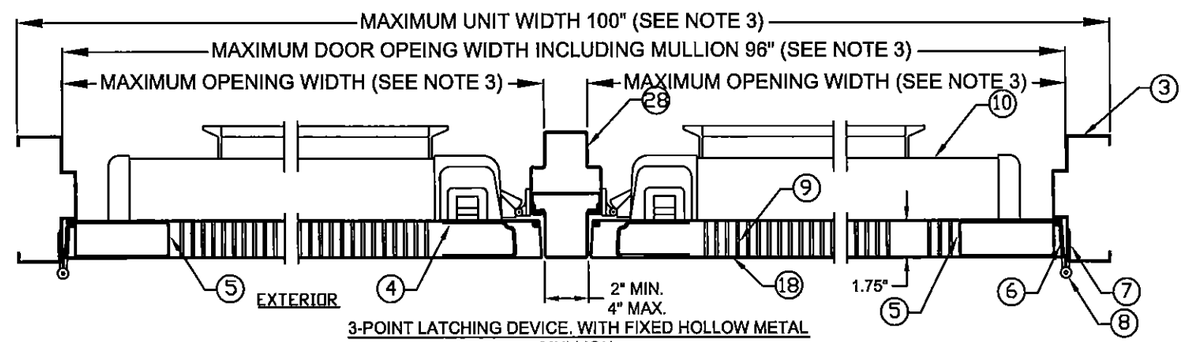

3-POINT LATCHING DEVICE. WITH FIXED HOLLOW METAL MULLION.
SECTION A-10 (SEE SHT.1)

GORDON D. THOMAS
LICENSE
No. 46718
STATE OF FLORIDA
PROFESSIONAL ENGINEER

Gordon Thomas, P.E. Date
3759 Blossom Court
Mason, OH 45040
Florida # 46718

REVISIONS				
LTR	DESCRIPTION		DATE	APPROVED
A	APPROVAL DWG	YMF	05/20/07	
F	REVISED DWG	YMF	06/02/08	
G	REVISED PER_MDBCCO	YMF	02/06/09	
H	REVISED DWG	YMF	03/18/09	
J	REVISED PER_MDBCCO	YMF	04/06/10	
K	REVISED NAME	JPD	11/01/13	
L	REVISED DWG	JPD	02/01/15	

NOTES:

1. FOR MAXIMUM OPENING SIZE SEE TABLE 1 ON SHT 2 OF 13.
2. SEE SHEET 4 FOR ANCHOR INSTALLATION AND SHEETS 3, 4 & 5 FOR SILL INSTALLATION DETAILS.
3. WHEN FIXED HOLLOW-METAL MULLION IS USED (CONFIGURATION 10 PER SHT.1) OVERALL UNIT WIDTH IS LIMITED TO 100". DOOR SIZES WILL DECREASE ACCORDINGLY.

PRODUCT REVIEWED
as complying with the Florida
Building Code
Acceptance No 13-1217.17
Expiration Date 5/5/16
By Idney L. Gaines
Miami Dade Product Control

BEND RADIUS

THIRD ANGLE PROJECTION

DRAWN YMF	DATE 05/20/07
CHECKED	
APPROVED	
ENG. APPVL	

SCHLAGE LOCK COMPANY, LLC
6810 HILLSDALE COURT
INDIANAPOLIS, IN 46250

MANUFACTURING FACILITY:
STEELCRAFT
9017 BLUE ASH ROAD
CINCINNATI, OH 45242

TITLE: STEELCRAFT H SERIES DOUBLE FLUSH OUTSWING COMMERCIAL STEEL DOORS WITH AND WITHOUT PANIC EXIT DEVICES

HORIZONTAL CROSS SECTIONS FOR FLUSH DOUBLE DOORS.

SIZE	FLAT	DWG NO.	REV
		IRFD07	L
SCALE: NTS	AUTOCAD		SHEET 10 OF 13

REVISIONS			
LTR	DESCRIPTION	DATE	APPROVED
A	APPROVAL DWG JPD	02/03/14	
B	REVISED DWG JPD	02/01/15	

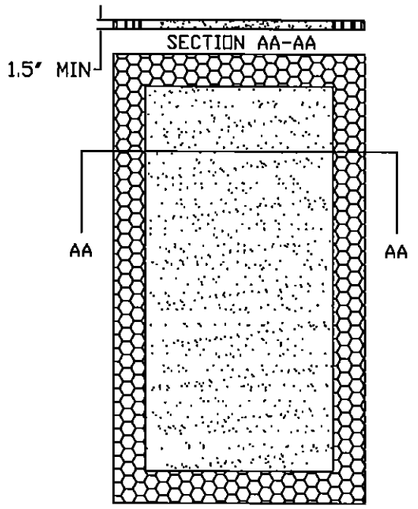

(A) EXPANDED POLYSTYRENE FOAM BY ATLAS EPS
DENSITY: 1.0 LBS/FT^3

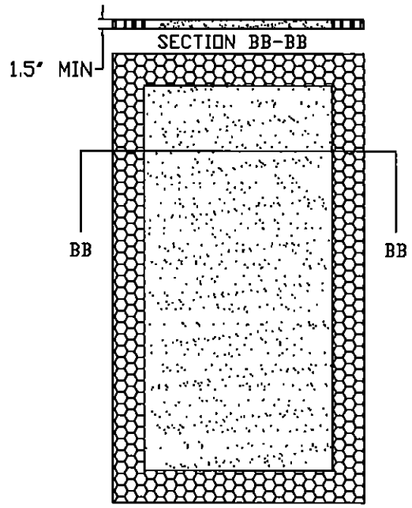

(B) POLYISOCYANURATE (POLYURETHANE)
BY ELFOAM. DENSITY: 2 LBS/FT^3

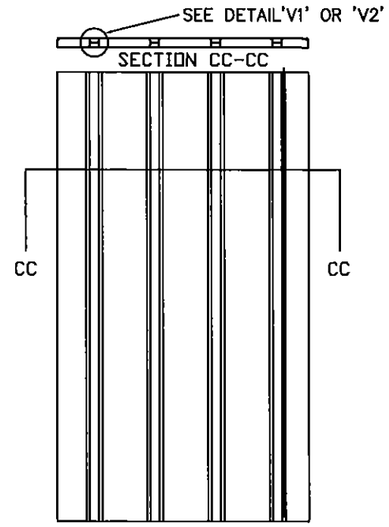

(C) STEEL STIFFENED HAT SHAPED SECTIONS

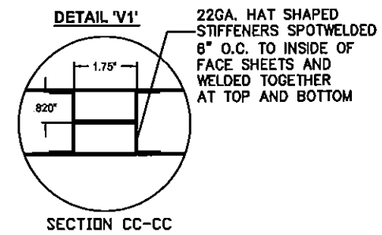

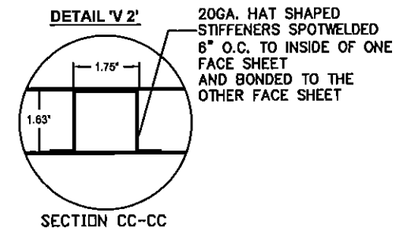

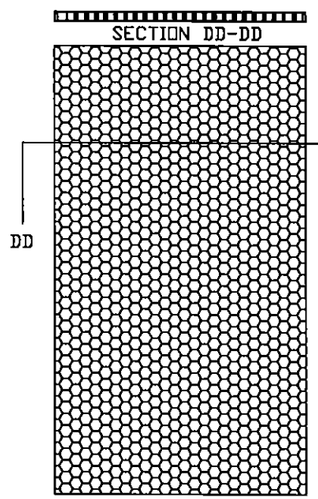

(D) HONEYCOMB KRAFT PAPER.

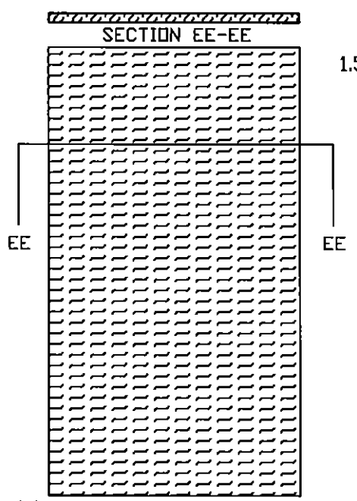

(E) TEMPERATURE RISE CORE MINERAL FIBER BOARD
DENSITY: 17±1.5 LBS/FT^3
PYROPHIBIC SYSTEMS LTD
PYROPHOBIC PSL-P250C-60 OR
MARSHFIELD DOOR SYSTEMS
CALCIUM SILICATE MINERAL CORE

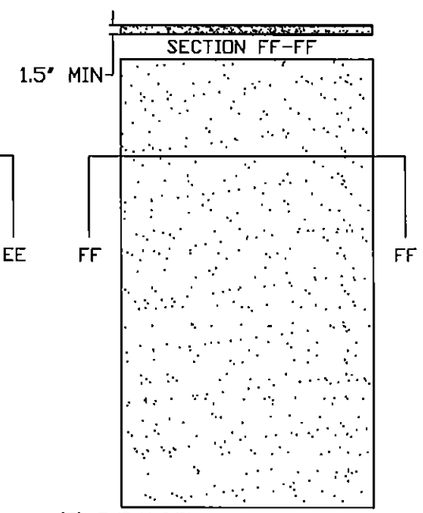

(F) EXPANDED POLYSTYRENE FOAM BY ATLAS EPS DENSITY: 1.0 LB/FT^3
OR POLYISOCYANURATE (POLYURETHANE)
BY ELFOAM. DENSITY: 2 LBS/FT^3

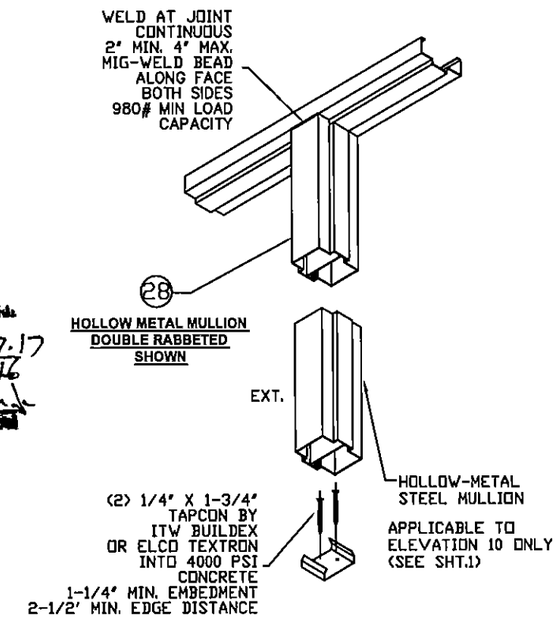

PRODUCT REVISED
to complying with the Florida
Building Code
Acceptance No. 13-1217.17
Expiration Date 5/5/16
By [illegible]
Signature Date/Product Control

NOTES:
1. CORE MATERIAL SHOWN WITHOUT CUTOUTS FOR REINFORCEMENTS

GORDON D. THOMAS
LICENSE
No. 46718
STATE OF FLORIDA
PROFESSIONAL ENGINEER
Gordon Thomas, P.E.
9184 Widsom Court
Mason, OH 45040
Florida # 46718
Date 3/2/16

BEND RADIUS

THIRD ANGLE PROJECTION

DRAWN JPD	DATE 02/03/14
CHECKED	
APPROVED	
ENG. APPVL	

SCHLAGE LOCK COMPANY, LLC
6810 HILLSDALE COURT
INDIANAPOLIS, IN 46250

MANUFACTURING FACILITY:
STEELCRAFT
9017 BLUE ASH ROAD
CINCINNATI, OH 45242

TITLE: STEELCRAFT H SERIES DOUBLE FLUSH OUTSWING COMMERCIAL STEEL DOORS WITH AND WITHOUT PANIC EXIT DEVICES

DOOR CORE OPTIONS AND
HOLLOW METAL AND HARDWARE MULLION INSTALLATION

SIZE	FLAT	DWG NO.	REV
		IRFD07	B
SCALE: NTS	AUTOCAD		SHEET 12 of 13

REVISIONS			
LTR	DESCRIPTION	DATE	APPROVED
A	APPROVAL DWGS.	11/01/13	
B	REVISED DWGS.	02/01/15	

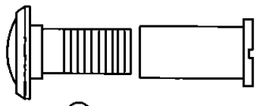

(29) IVES DOOR VIEWER

STEEL BUTT HINGE
4.5" X 4.5" STD. WT. MIN.
IVES 5BB1/3CB1
STANLEY FBB179/1900
HAGER BB1279
.134" MIN. THICKNESS
Fy MIN. = 36ksi

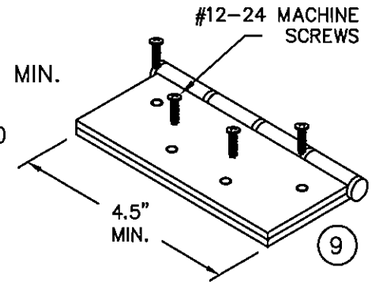

CONTINUOUS HINGE
IVES 112HD & 224HD
STANLEY 661HD
SELECT SL11HD
PEMKO FM_HD SERIES
HAGER 780-224HD
ABH A240HD
ALUMINUM 6036-T6 MIN
.110" MIN. THICKNESS

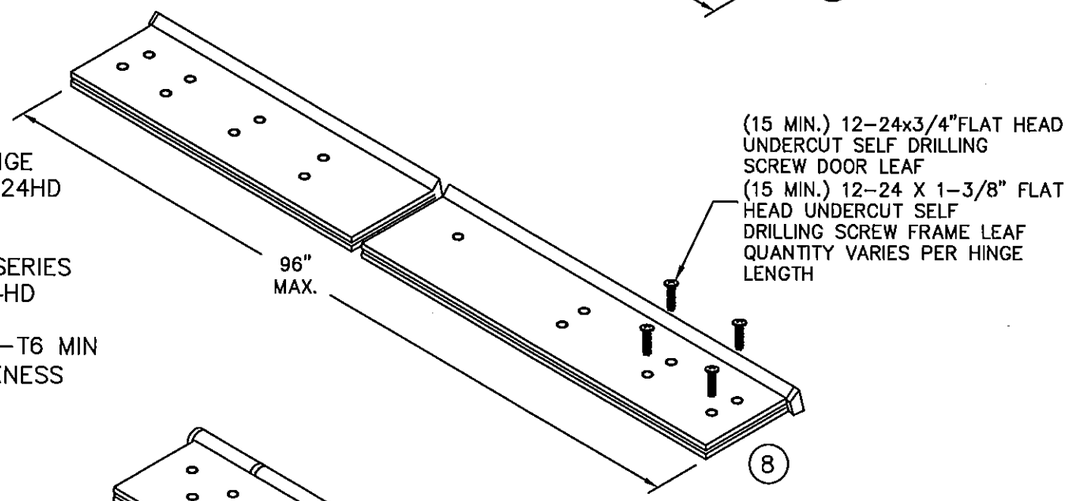

STEEL CONTINUOUS HINGE
IVES 600
.075 (14GA.) MIN. THCKNESS
1012 COLD ROLLED STEEL
Fy MIN. 45ksi
STAINLESS STEEL CONTINUOUS HINGE
IVES 700, 700CS
HAGER 790-900
MARKAR FM-300 & HG305
ABH A500
.075 (14GA.) MIN. THICKNESS
304 STAINLESS STEEL
Fy MIN. 31ksi

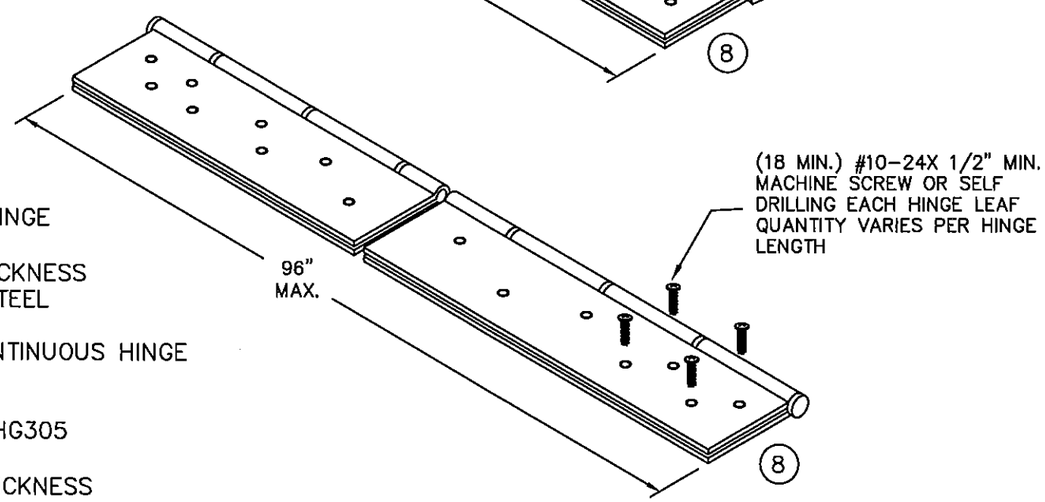

VON DUPRIN MULLION (2)

KR 9954 MULLION

4X 5/16-18 MACHINE SCREWS Fy=120ksi min.

DETAIL 'C-1'

9954 MULLION

4X 5/16-18 MACHINE SCREWS Fy=120ksi min.

DETAIL 'C-1'

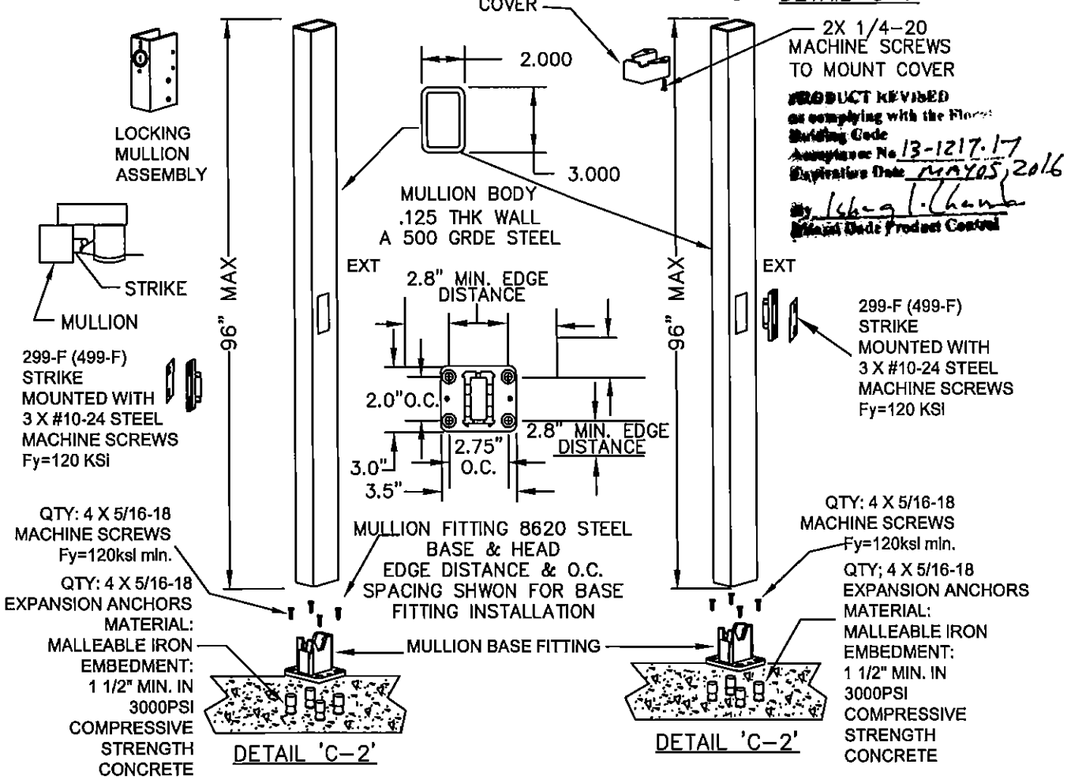

PRODUCT REVISED
as complying with the Florida Building Code
Compliance No. 13-1217.17
Expiration Date MAY 05, 2016
By Ichang L. Chang
Miami-Dade Product Control

CONTINUOUS HINGE NOTES:
1. QUANTITY OF SCREWS VARIES PER HINGE LENGTH, MANUFACTURER AND MODEL NUMBER
2. SCREW SPACING VARIES PER HINGE LENGTH, MANUFACTURER AND MODEL NUMBER
3. INSTALL HINGES PER THE MANUFACTURERS INSTALLATION INSTRUCTIONS

GORDON D. THOMAS LICENSE No. 46718 STATE OF FLORIDA PROFESSIONAL ENGINEER
3/17/15
Gordon Thomas
3769 Blossom Court
Moseley, OH 45040
Florida PE 46718
Date

BEND RADIUS

THIRD ANGLE PROJECTION

DRAWN JPD	DATE 02/03/14
CHECKED	
APPROVED	
ENG. APPVL	

SCHLAGE LOCK COMPANY, LLC
6810 HILLSDALE COURT
INDIANAPOLIS, IN 46250

MANUFACTURING FACILITY:
STEELCRAFT
9017 BLUE ASH ROAD
CINCINNATI, OH 45242

TITLE: STEELCRAFT H SERIES DOUBLE FLUSH OUTSWING COMMERCIAL STEEL DOORS WITH AND WITHOUT PANIC EXIT DEVICES

HINGE OPTIONS

SIZE	FLAT	DWG NO.	REV
		IRFD07	B
SCALE: NTS	AUTOCAD		SHT 13 OF 13