MIAMI-DADE COUNTY
PRODUCT CONTROL SECTION
11805 SW 26 Street, Room 208
Miami, Florida 33175-2474
T (786) 315-2590 F (786) 315-2599
www.miamidade.gov/economy

DEPARTMENT OF REGULATORY AND ECONOMIC RESOURCES (RER)
BOARD AND CODE ADMINISTRATION DIVISION

NOTICE OF ACCEPTANCE (NOA)

Exclusive Wood Doors, Inc.
1950 N. W. 70th Ave.
Miami, Florida 33126

SCOPE:

This NOA is being issued under the applicable rules and regulations governing the use of construction materials. The documentation submitted has been reviewed and accepted by Miami-Dade County RER -Product Control Section to be used in Miami Dade County and other areas where allowed by the Authority Having Jurisdiction (AHJ).

This NOA shall not be valid after the expiration date stated below. The Miami-Dade County Product Control Section (In Miami Dade County) and/or the AHJ (in areas other than Miami Dade County) reserve the right to have this product or material tested for quality assurance purposes. If this product or material fails to perform in the accepted manner, the manufacturer will incur the expense of such testing and the AHJ may immediately revoke, modify, or suspend the use of such product or material within their jurisdiction. RER reserves the right to revoke this acceptance, if it is determined by Miami-Dade County Product Control Section that this product or material fails to meet the requirements of the applicable building code.

This product is approved as described herein, and has been designed to comply with the Florida Building Code, including the High Velocity Hurricane Zone.

DESCRIPTION: Series "EWD" Outswing Glazed Wood Doors-L. M. Impact

APPROVAL DOCUMENT: Drawing No. **EXD003R3,** titled "Outswing Opaque Wood Door", sheets 1 thru 13 of 13 dated 11/17/10 and last revised on 06/25/14, prepared by CATEGORY 5 Engineering Services, Inc., signed and sealed by Emma T. Mellinger, P.E., bearing the Miami-Dade County Product Control Revision stamp with the Notice of Acceptance number and expiration date by the Miami-Dade County Product Control Section.

MISSILE IMPACT RATING: Large and Small Missile Impact Resistant

Limitations:

1. See double doors Standard Lock options (items #11, 12 & 13) sheets **2, 3 & 4**, See multi-point lock option (items #12, 14 &15) in sheets **2, 3 & 4**. See Single door standard Lock option, multi-point lock option and additional 3-point with surface bolts (items #11, 12 & 16) in sheet **5**.
2. **Partial** raised panels are limited to max. **23"W X 27" H**. See glazing options in sheet **10**.
3. Five cluster anchors at double door astragal required (see elevation sheets **2, 3 & 4**). See strike screws note in sheet **12**.

LABELING: Each unit shall bear a permanent label with the manufacturer's name or logo, **Santa Cruz, Bolivia** and following statement: "Miami-Dade County Product Control Approved", unless otherwise noted herein.

RENEWAL of this NOA shall be considered after a renewal application has been filed and there has been no change in the applicable building code negatively affecting the performance of this product.

TERMINATION of this NOA will occur after the expiration date or if there has been a revision or change in the materials, use, and/or manufacture of the product or process. Misuse of this NOA as an endorsement of any product, for sales, advertising or any other purposes shall automatically terminate this NOA. Failure to comply with any section of this NOA shall be cause for termination and removal of NOA.

ADVERTISEMENT: The NOA number preceded by the words Miami-Dade County, Florida, and followed by the expiration date may be displayed in advertising literature. If any portion of the NOA is displayed, then it shall be done in its entirety.

INSPECTION: A copy of this entire NOA shall be provided to the user by the manufacturer or its distributors and shall be available for inspection at the job site at the request of the Building Official.

This NOA **revises NOA # 10-1220.01** and consists of this page 1 and evidence pages E-1, as well as approval document mentioned above.

The submitted documentation was reviewed by **Ishaq I. Chanda, P.E.**

MIAMI-DADE COUNTY APPROVED

7/7/14

NOA No. 13-1224.10
Expiration Date: August 11, 2016
Approval Date: July 17, 2014

NOTICE OF ACCEPTANCE: EVIDENCE SUBMITTED

A. DRAWINGS

1. Manufacturer's parts and sections drawings (submitted under file **#10-1220.01**)
2. Drawing No. **EXD003R3,** titled "Outswing Opaque Wood Door", sheets 1 thru 13 of 13 dated 11/17/13 and last revised on 06/25/14, prepared by CATEGORY 5 Engineering Services, Inc., signed and sealed by Emma T. Mellinger, P.E.

B. TESTS (submitted under file **#10-1220.01**)

1. Test reports on 1) Air Infiltration Test, per FBC, TAS 202-94
   2) Uniform Static Air Pressure Test, Loading per FBC, TAS 202-94
   3) Water Resistance Test, per FBC, TAS 202-94
   4) Forced Entry Test, per FBC 2411 3.2.1 and TAS 202-94
   5) Large Missile impact Test per FBC, TAS 201-94
   6) Cyclic Wind Pressure Loading per FBC, TAS 203-94

Along with marked-up drawings and installation diagram of Outswing Opaque Wood doors, prepared by Certified Testing Laboratories, Test Report No(s). **CTLA 2016W**, dated 11/15/10, signed & sealed by Ramesh Patel, P.E.

(These test reports have been revised by an addendum letter dated April 02, 2010, issued by Certified Testing Lab, signed & sealed by Ramesh Patel, P.E. Additionally revised raised panel detail marked-up by Certified Testing lab dated 06/23/11 has been provided)

C. CALCULATIONS

1. Anchor verification calculations, dated 12/21/13, 05/16/14, 06/06/14 and last revised on 06/12/14, prepared by CATEGORY 5 Engineering Services, Inc., signed & sealed by Emma T. Mellinger, P.E.
2. Glazing complies with ASTME-1300-02 & 04.

D. QUALITY ASSURANCE

1. Miami Dade department of Regulatory and Economic Resources (RER).

E. MATERIAL CERTIFICATIONS

1. Notice of Acceptance No. **12-1231.09** issued to Eastman Chemical Company (MA) former Solutia, for "Saflex clear or color glass interlayer", expiring on 04/04/2018.

F. STATEMENTS

1. Statement letters of conformance to FBC 2010 and "No financial interest", both dated 12/21/13, signed & sealed by prepared by CATEGORY 5 Engineering Services, Inc., signed and sealed by Emma T. Mellinger, P.E.
2. Statement letter of Successor Engineer adopting as her own the work of another Engineer per FAC chapter 61G15-27.001, dated 03/04/14, signed and sealed by Emma T. Mellinger, P.E
3. Addendum letter dated 04/02/10, issued by Certified Testing Lab, signed by Ramesh Patel, P. E.
4. Statement of compliance, issued as part of the above referenced test report issued by Certified Testing Laboratories.
5. Distribution Agreement between Importadora y Exportadora Liguria SRL, Bolivia and Exclusive Wood Doors, USA, dated 04/02/14, signed by Andres Pucci and Fernando Nisenbaum, respectively

G. OTHER

1. This NOA **revises NOA # 10-1220.01,** expiring 08/11/16.
2. Test proposal # **09-1386** dated 11/19/09, approved by BCCO.
3. The 2-1/2 mid rail photographic evidence from test video and raised panel detail marked-up drawing dated 06/23/11, issued by Certified Testing.

Ishaq I. Chanda

Ishaq I. Chanda, P.E.
Product Control Examiner
NOA No. 13-1224.10
Expiration Date: August 11, 2016
Approval Date: July 17, 2014

GENERAL NOTES:

1. The Product Shown Herein is Designed and Manufactured to Comply with the Florida Building Code (FBC) , including the High Velocity Hurricane Zone (HVHC) and has been Tested and Evaluated in Accordance with the Following Standards
   - TAS 201-94
   - TAS 202-94
   - TAS 203-94

2. Adequacy of the Existing Structural Concrete, Masonry, 2" x PT Wood, or Metal Stud Framing as a Main Wind Force Resisting System Capable of Withstanding and Transferring Applied Product Loads to the Foundation is the Responsibility of the Engineer or Architect of Record for the Project of Installation.

3. 1" x and 2" x PT Wood Bucks (when used) Shall be Designed and Anchored to Properly Transfer all Loads to the Supporting Structure. Buck Design and Installation is the Responsibility of the Engineer or Architect of Record for the Project of Installation.

4. The Installation Details Described Herein are Generic and May Not Reflect Actual Conditions for a Specific Site. If Site Conditions Cause Installation to Deviate From the Requirements Detailed Herein, a Licensed Engineer or Architect Shall Prepare Site Specific Documents for Use with this Document in Non-HVHZ Areas Only. All Such Documents Shall be Reviewed by the Authority Having Jurisdiction.

5. Deviation from This NOA within the HVHZ Requires One-Time Approval from Miami-Dade County.

6. An Approved Impact Protective System is Not Required to Protect this Product in Areas Requiring Impact Resistance.

7. Allowable Materials for Door Frame and Panels:
   Brazilian Mahogany *(cedrelinga catenaeformis, min. sg=0.55)*
   Tropical Walnut *(cariniana estrellensis, min sg=0.68)*

8. Designation "X" Stands for a Single Operable Panel. Designation "XX" Stands for a Double Operable Panel [One Active, the Other Inactive].

9. Compliance with Egress Requirements of this Door Shall be Reviewed by the Authority Having Jurisdiction.

10. Custom Sizes and Designs Outside the Scope of this NOA are Available by Request, and Must Follow the Procedures Outlined Above in Notes 4 and 5, as Applicable.

INSTALLATION NOTES:

1. One (1) Installation Anchor is Required at Each Anchor Location Shown, Unless Otherwise Stated.

2. The Anchor Spacing Depicted is the Maximum Spacing Permitted for Product Installation.

3. Anchors Shall be Installed as Shown in the Appropriate Anchor Layout Drawing (Sheets 2, 3, 4, and 5). Anchors Shall be Located Either Beneath the Weatherstrip in the Thinner Part of the Jamb, or Through the Thicker Part of the Jamb. Anchors Shall be Spaced a Minimum of 3" on Center.

4. For Installation into 2" x PT Wood Buck use #14 Hilti Kwik-Flex Self Drilling Screws of Sufficient Length to Achieve 1½" Minimum Embedment into Wood Substrate, and ¾" Minimum Edge Distance in Wood.

5. For Installation Through Properly Secured 1" x PT Wood Buck to Concrete or Masonry, or Directly into Concrete or Masonry, use ¼" Diameter ELCO ULtraCon of Sufficient Length to Achieve 1¾" Minimum Embedment, and 2½" Minimum Edge Distance in Substrate.

6. For Installation Through 16 ga Steel Stud or ⅛" Minimum Thickness Aluminum Mullion use #14 Hilti Kwik-Flex Self Drilling Screws of Sufficient Length to Achieve Minimum Penetration of 3 Threads Beyond Metal Structure, and ½" Minimum Edge Distance in Metal.

7. Minimum Embedment and Edge Distance Exclude Wall Finishes, such as Stucco, Foam, Brick Veneer, and Siding, etc.

8. Installation Anchors and Associated Hardware Must be Made of Corrosion Resistant Material or Have a Corrosion Resistant Coating.

9. For Grout Filled Block, Do Not Install Installation Anchors into Mortar Joints. Edge Distance is Measured From Free Edge of Block or Edge of Mortar Joint into Face Shell of Block.

10. Installation Anchors Shall be Installed in Accordance With Anchor Manufacturer's Installation Instructions. Anchors Shall not be Used in Substrates With Strengths Less than the Minimum Strength Specified by the Anchor Manufacturer, nor in Substrates with Properties Lower Than the Minimums Specified in Note 12 This Sheet.

11. **Hinges** Each Hinge Shall be Installed with (4) #12 Wood Screws from Hinge-to-Door, (3) #12 Wood Screws from Hinge-to-Frame, and **(1) Installation Anchor from Hinge Through Frame into Substrate** with Appropriate Embedment, Edge Distance, and Anchor Type.

TABLE OF CONTENTS

SHEET	REVISION	SHEET DESCRIPTION
1	6	GENERAL and INSTALLATION NOTES
2	6	ELEVATIONS and ANCHOR LAYOUTS (1)
3	6	ELEVATIONS and ANCHOR LAYOUTS (2)
4	6	ELEVATIONS and ANCHOR LAYOUTS (3)
5	6	ELEVATIONS and ANCHOR LAYOUTS (4)
6	6	VERTICAL SECTIONS
7	6	HORIZONTAL SECTIONS
8	6	DOOR PANEL SECTIONS
9	6	COMPONENTS and BILL OF MATERIALS
10	6	CORNER SECTIONS and PANEL DETAIL
11	6	LOCKING HARDWARE DETAILS (1)
12	6	LOCKING HARDWARE DETAILS (2)
13	6	QUALIFIED PANEL CONFIGURATIONS

DESIGN PRESSURE RATING

Design Pressure - All Sizes		Missile Impact Rating
+70 psf, -70 psf	W/ Water Infiltration Required	Large and Small Missile Impact Rated
	W/O Water Infiltration Required	

12. Installation Anchor Capacities are Based on Substrate Materials with the Following Properties:
    - **Wood** minimum specific gravity of 0.55.
    - **Concrete** minimum compressive strength of 2,846 psi.
    - **Masonry** conformance to ASTM C-90, Grade S or M. net f'c min = 1,924 psi, and Grout Conforming to ASTM C-476 with min f'g = 2000 psi.
    - **Steel** min. yield strength of 33 ksi. min. wall thickness of 60 mils. (16 ga, or 0.060 in.)
    - **Aluminum** min. 6063-T6 min. wall thickness of 0.125 in. Product-Approved Structural Mullion Only

13. All Substrates Shall be Designed by Others to Adequately Transfer Applied Loads, and Shall be Reviewed by the Building Official.

PRODUCT REVISED
as complying with the Florida
Building Code
Acceptance No. 13-1224.10
Expiration Date 04/11/2016
By [illegible]
Miami-Dade Product Control

CATEGORY 5
Engineering Services, Inc.
1600 S. Federal Highway, #207
Pompano Beach, FL 33062
(954) 784-6991 • CA #25854

Sheet 1 of 13

DRAWING No. EXD 003 R6

REVISIONS

No	Date	By	Description
1	12/17/13	EM	Update to Curent FBC
2	2/17/14	EM	Comments per Miami-Dade
3	3/19/14	EM	Comments per Miami-Dade
4	4/9/14	EM	Lock Hardware Clarification
5	6/4/14	EM	Comments per Miami-Dade
6	6/24/14	EM	CMU Anchors, Panel Thickness

OUTSWING GLAZED WOOD DOOR LARGE MISSILE IMPACT RESISTANT

Exclusive Wood Doors, Inc.
1950 NW. 70th Ave, Miami, FL 33126

GENERAL and INSTALLATION NOTES

EXCLUSIVE WOOD DOORS EWD

JUN 25 2014

EMMA T. MELLINGER
LICENSE
No 50049
STATE OF FLORIDA
PROFESSIONAL ENGINEER

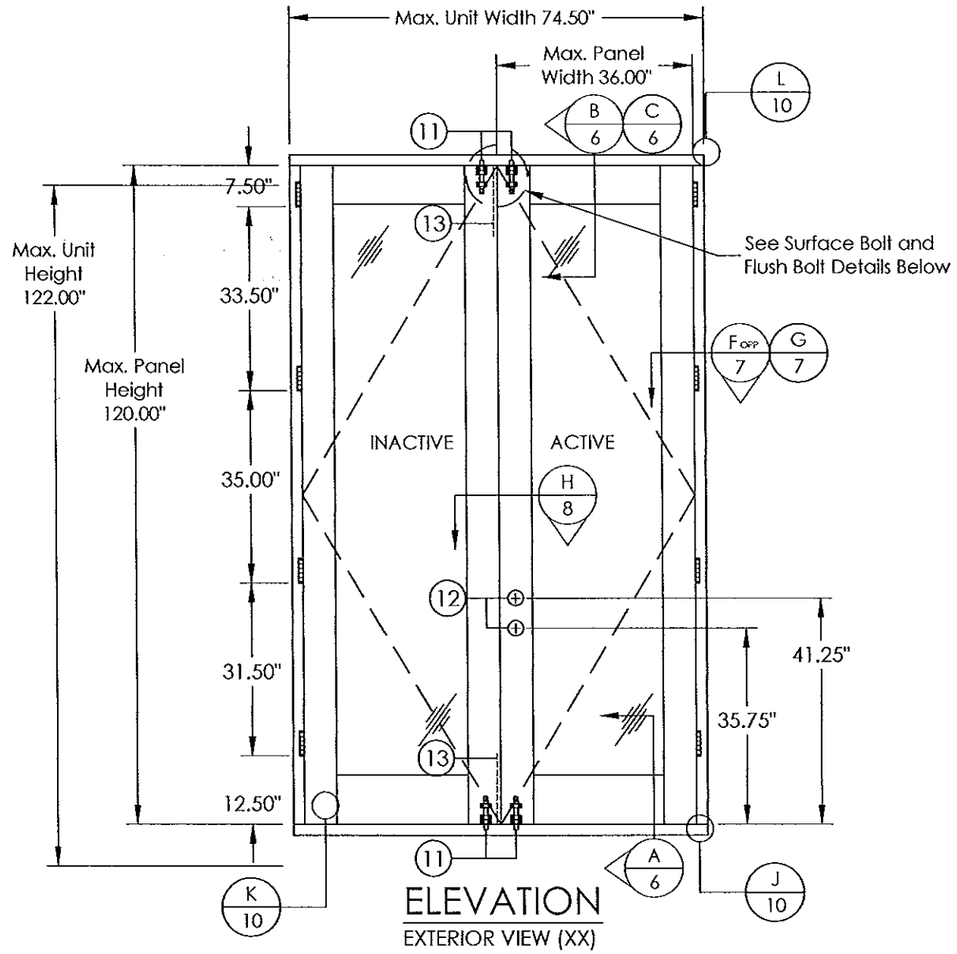

ELEVATION

EXTERIOR VIEW (XX)
STANDARD LOCK OPTION

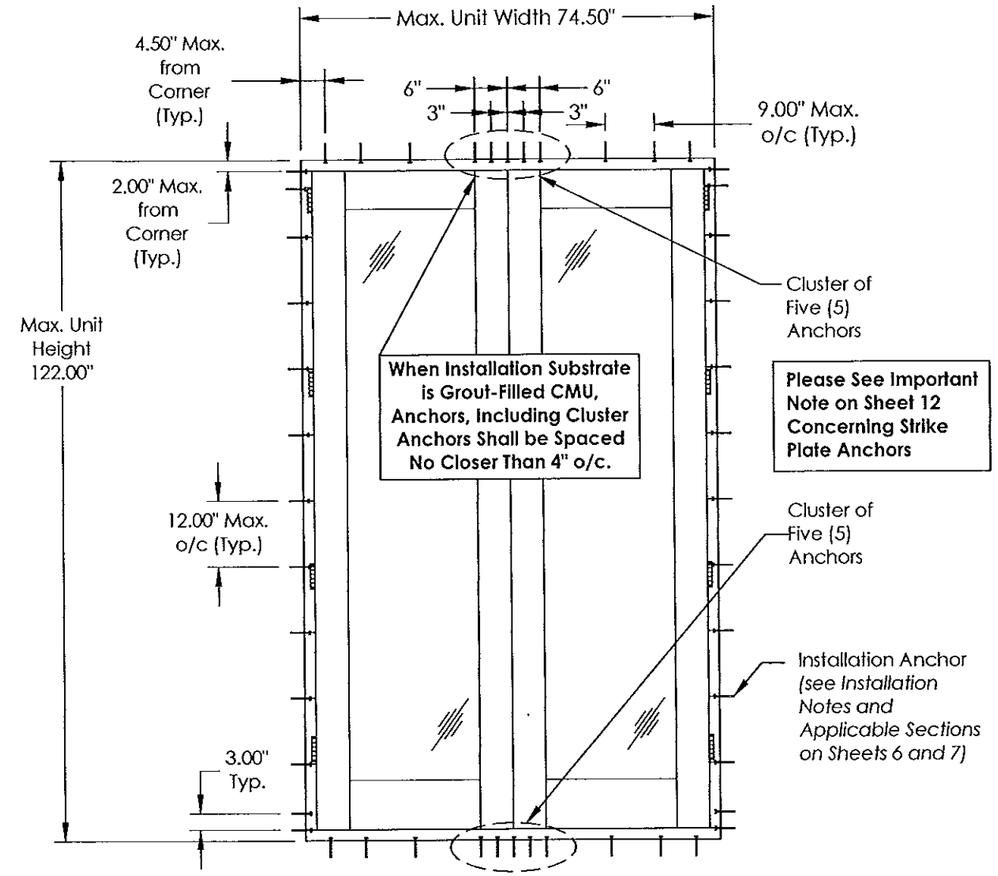

ANCHOR LAYOUT

Please See Important Note on Sheet 12 Concerning Strike Plate Anchors

DOUBLE OUTSWING DOOR.

- Square-Top Panel Configuration Shown.
- Other Allowed Configurations are Shown on Sheet 13.
- Either Right-Hand or Left-Hand Active Panel.
- Outswing Only.

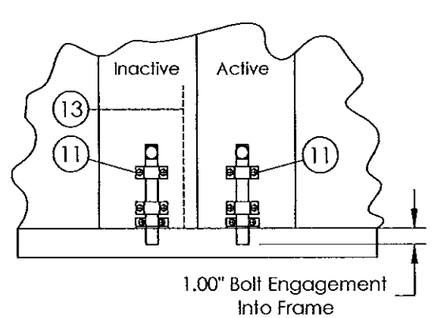

SURFACE BOLT DETAIL

Located at Top and Bottom of Each Active and Inactive Panel *(Interior Side of Panel)*

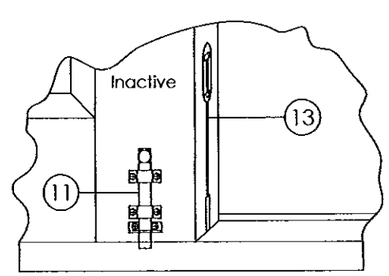

CUT-AWAY FLUSH BOLT DETAIL

Located at Top and Bottom of Inactive Panel *(at Stile Edge)*
See Details on Sheet 11

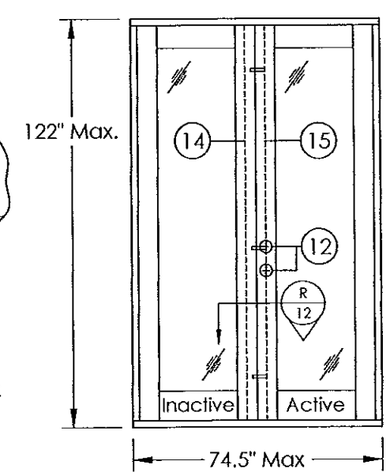

◁ELEVATION

EXTERIOR VIEW (XX)
MULTI-POINT LOCK OPTION
See Details on Sheet 11, Including Shoot Bolt Engagement

PRODUCT REVISED
as complying with the Florida Building Code
Acceptance No. 13-1224.10
Expiration Date 8/11/16
By [signature]
Miami Dade Product Control

CATEGORY 5
Engineering Services, Inc.
1600 S. Federal Highway, #207
Pompano Beach, FL 33062
(954) 784-6991 • CA #25854

Sheet 2 of 13
DRAWING No. EXD 003 R6

REVISIONS

No	Date	By	Description
1	12/17/13	EM	Update to Curent FBC
2	2/17/14	EM	Comments per Miami-Dade
3	3/19/14	EM	Comments per Miami-Dade
4	4/9/14	EM	Lock Hardware Clarification
5	6/4/14	EM	Comments per Miami-Dade
6	6/24/14	EM	CMU Anchors, Panel Thickness

OUTSWING GLAZED WOOD DOOR
LARGE MISSILE IMPACT RESISTANT
Exclusive Wood Doors, Inc.
1950 NW. 70th Ave, Miami, FL 33126

ELEVATIONS and ANCHOR LAYOUTS (1)

EXCLUSIVE EWD WOOD DOORS

JUN 25 2014

EMMA T. MELLINGER
LICENSE
No 50049
STATE OF FLORIDA
PROFESSIONAL ENGINEER

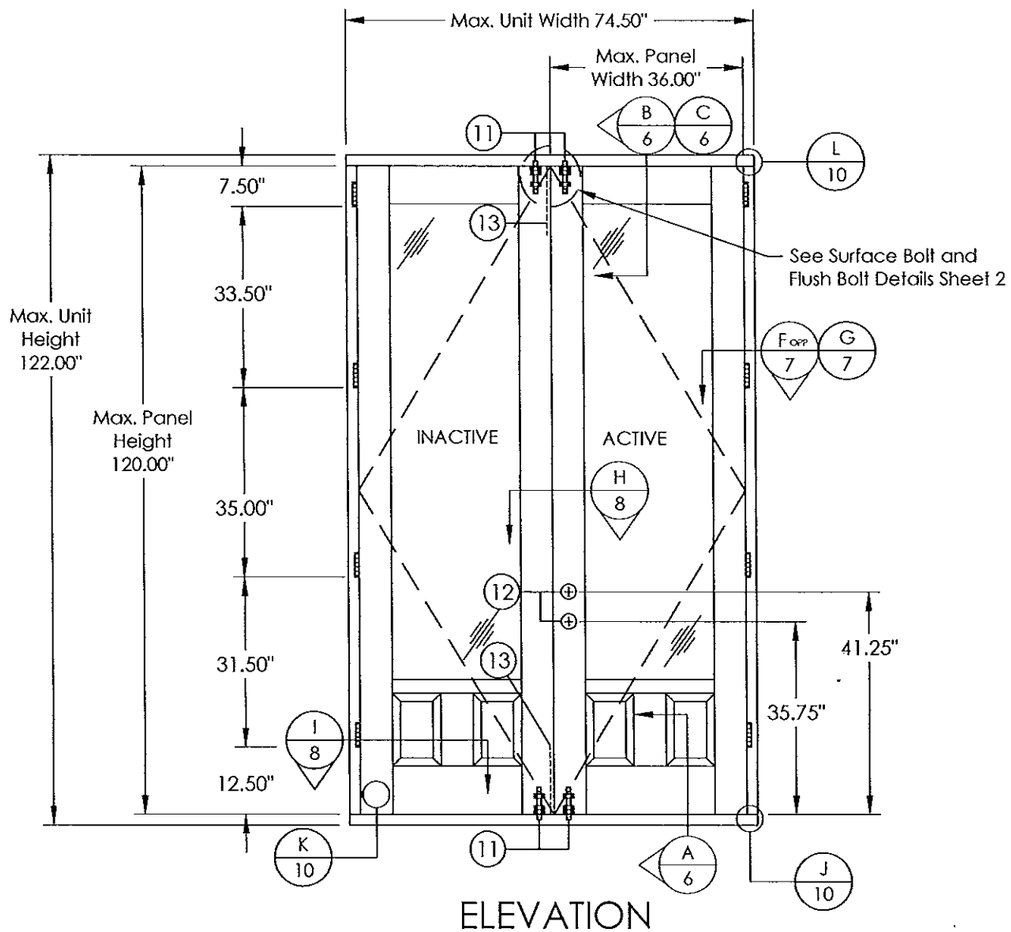

ELEVATION

EXTERIOR VIEW (XX)
STANDARD LOCK OPTION

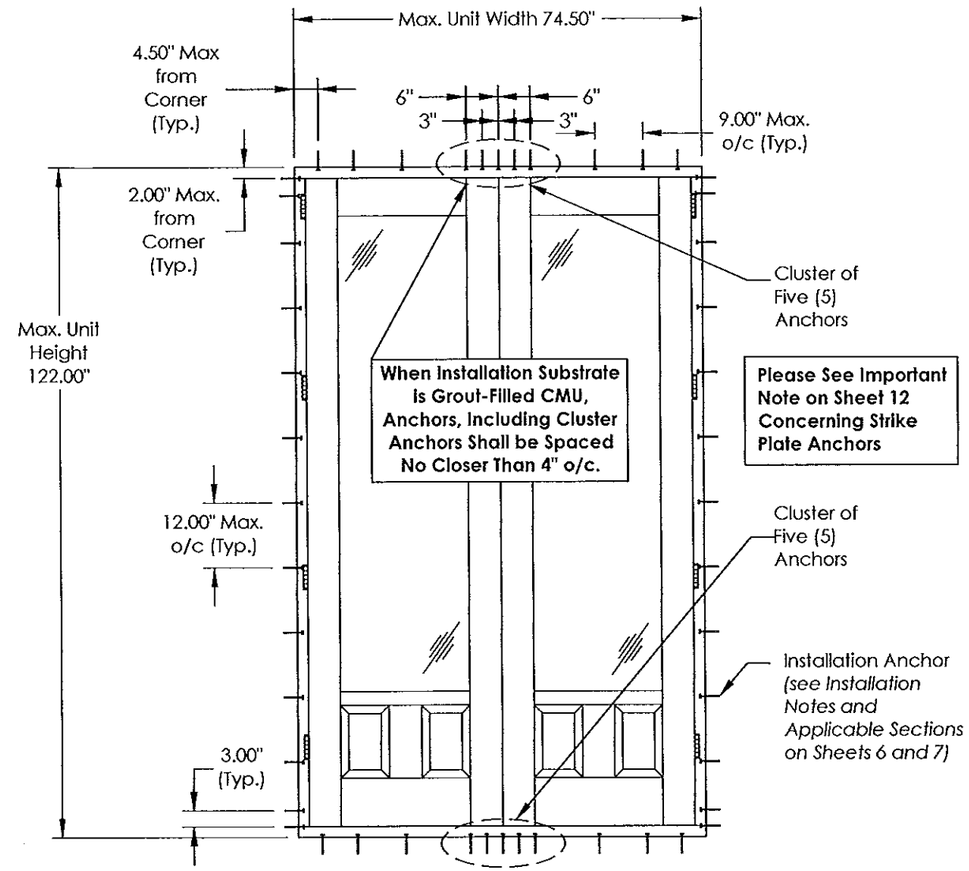

ANCHOR LAYOUT

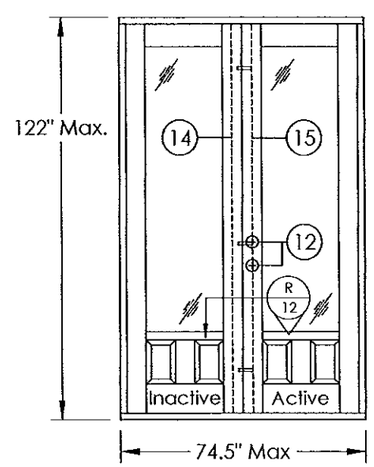

Please See Important Note on Sheet 12 Concerning Strike Plate Anchors

◁ ELEVATION

EXTERIOR VIEW (XX)
MULTI-POINT LOCK OPTION
See Details on Sheet 11, Including Shoot Bolt Engagement

DOUBLE OUTSWING DOOR.

- Square-Top Panel Configuration Shown.
- Other Allowed Configurations are Shown on Sheet 13.
- Either Right-Hand or Left-Hand Active Panel.
- Outswing Only.

PRODUCT REVISED as complying with the Florida Building Code Acceptance No. 13-1224.10 Expiration Date 8/11/16
Date Product Control

JUN 25 2014

EMMA T. MELLINGER LICENSE No 50049 STATE OF FLORIDA PROFESSIONAL ENGINEER

CATEGORY 5 Engineering Services, Inc.
1600 S. Federal Highway, #207
Pompano Beach, FL 33062
(954) 784-6991 • CA #25854

Sheet 3 of 13

DRAWING No. EXD 003 R6

REVISIONS

No	Date	By	Description
1	12/17/13	EM	Update to Current FBC
2	2/17/14	EM	Comments per Miami-Dade
3	3/19/14	EM	Comments per Miami-Dade
4	4/9/14	EM	Lock Hardware Clarification
5	6/4/14	EM	Comments per Miami-Dade
6	6/24/14	EM	CMU Anchors, Panel Thickness

OUTSWING GLAZED WOOD DOOR LARGE MISSILE IMPACT RESISTANT

Exclusive Wood Doors, Inc.
1950 NW. 70th Ave, Miami, FL 33126

EXCLUSIVE EWD WOOD DOORS

ELEVATIONS and ANCHOR LAYOUTS (2)

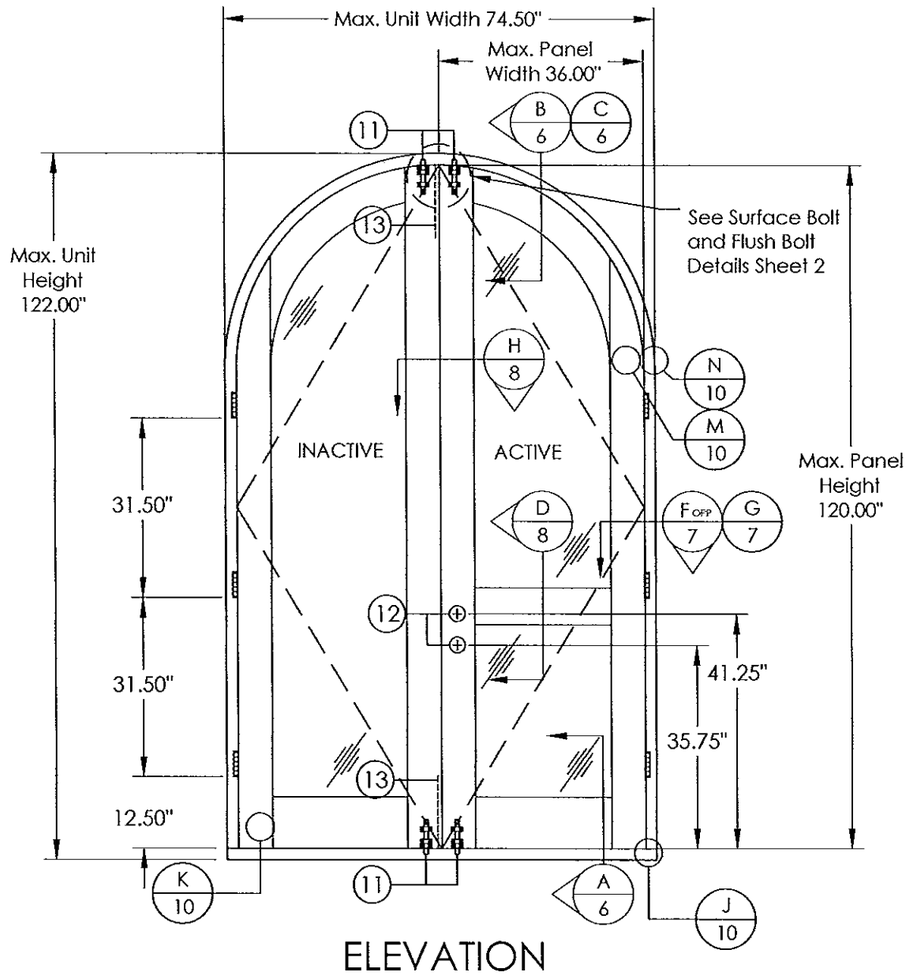

ELEVATION
EXTERIOR VIEW (XX)

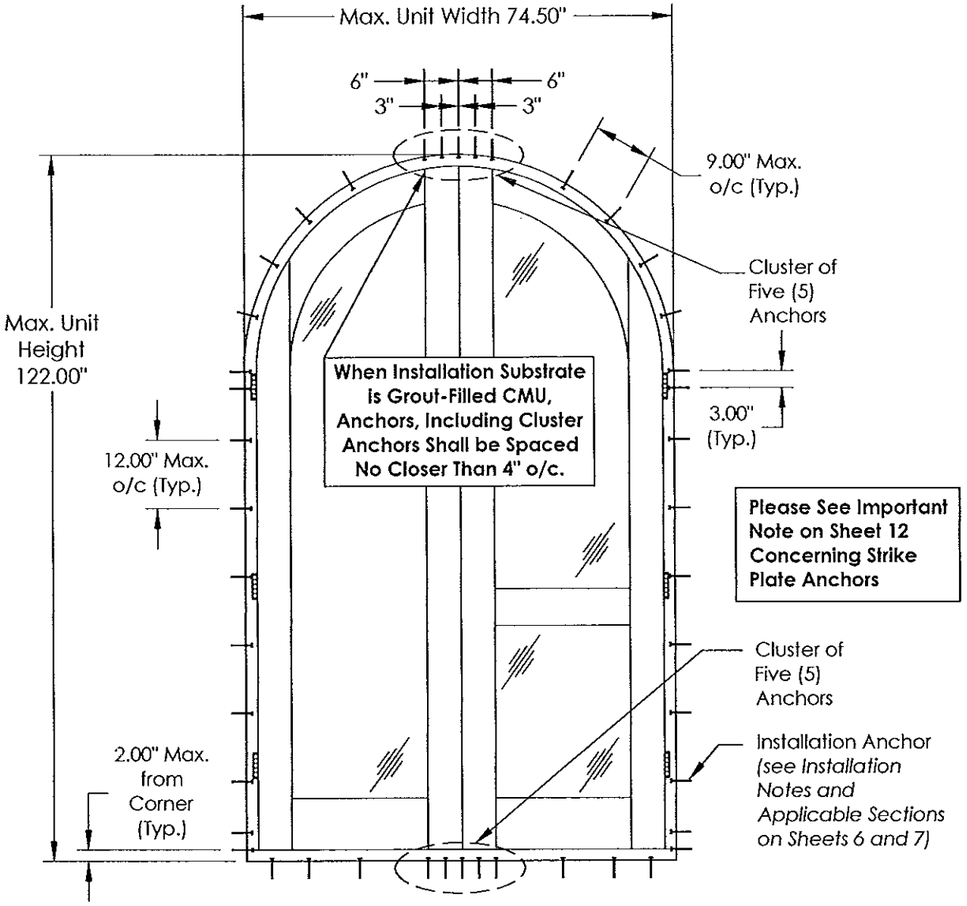

ANCHOR LAYOUT

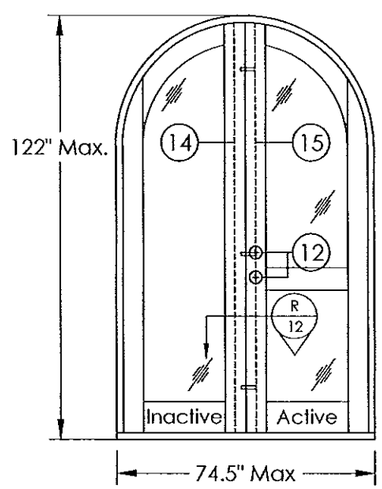

Please See Important Note on Sheet 12 Concerning Strike Plate Anchors

◁ ELEVATION

EXTERIOR VIEW (XX)
MULTI-POINT LOCK OPTION
See Details on Sheet 11, Including Shoot Bolt Engagement

DOUBLE OUTSWING DOOR.

- Round-Top Panels Configuration Shown.
- Other Allowed Configurations are Shown on Sheet 13.
- Either Right-Hand or Left-Hand Active Panel.
- Outswing Only.

PRODUCT REVISED as complying with the Florida Building Code
Acceptance No. 13-1224.10
Expiration Date 8/14/16
By Chris L. Chandler
Product Date/Product Control

JUN 25 2014

EMMA T. MELLINGER
LICENSE
No 50049
STATE OF FLORIDA
PROFESSIONAL ENGINEER

CATEGORY 5
Engineering Services, Inc.
1600 S. Federal Highway, #207
Pompano Beach, FL 33062
(954) 784-6991 • CA #25854

Sheet 4 of 13

DRAWING No. EXD 003 R6

REVISIONS

No	Date	By	Description
1	12/17/13	EM	Update to Curent FBC
2	2/17/14	EM	Comments per Miami-Dade
3	3/19/14	EM	Comments per Miami-Dade
4	4/9/14	EM	Lock Hardware Clarification
5	6/4/14	EM	Comments per Miami-Dade
6	6/24/14	EM	CMU Anchors, Panel Thickness

OUTSWING GLAZED WOOD DOOR LARGE MISSILE IMPACT RESISTANT

Exclusive Wood Doors, Inc.
1950 NW. 70th Ave, Miami, FL 33126

ELEVATIONS and ANCHOR LAYOUTS (3)

EXCLUSIVE EWD WOOD DOORS

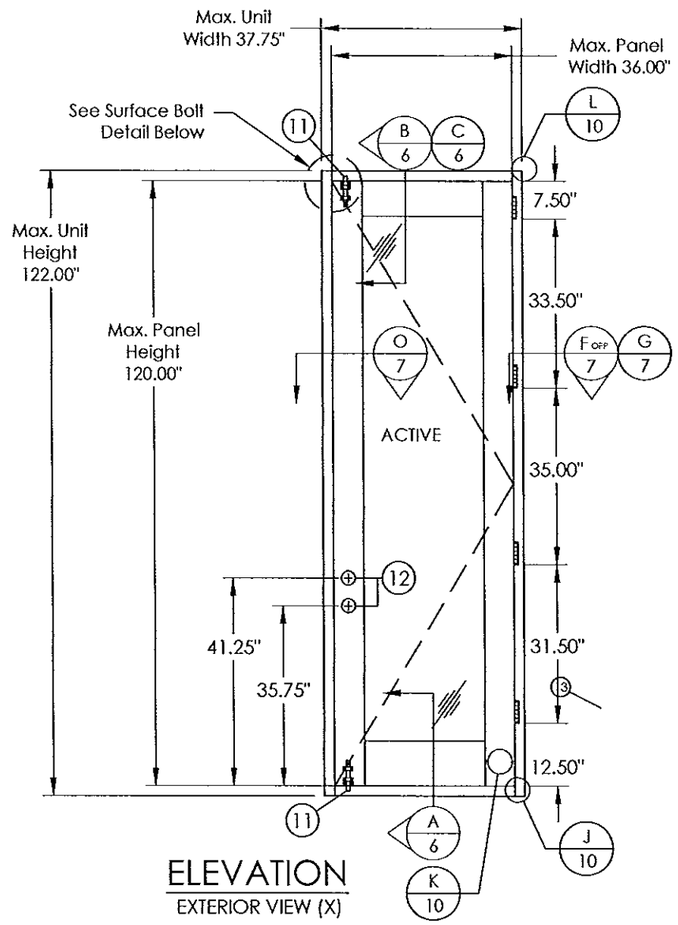

ELEVATION
EXTERIOR VIEW (X)

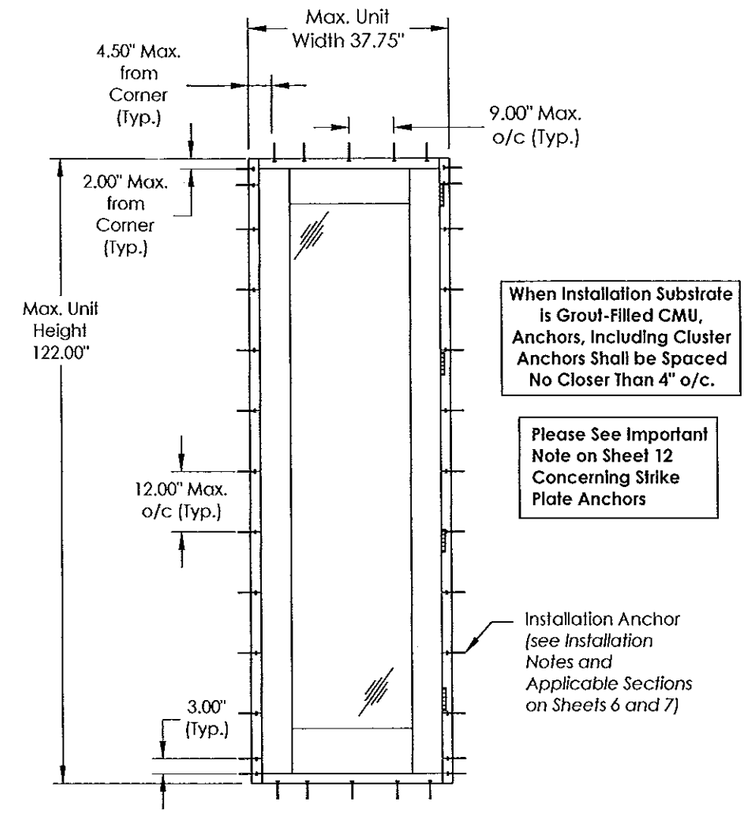

When Installation Substrate is Grout-Filled CMU, Anchors, Including Cluster Anchors Shall be Spaced No Closer Than 4" o/c.

Please See Important Note on Sheet 12 Concerning Strike Plate Anchors

ANCHOR LAYOUT

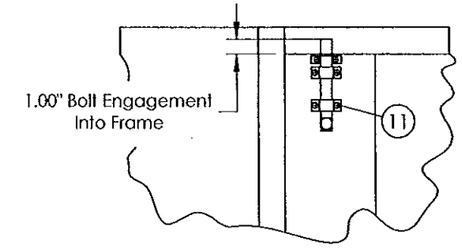

SINGLE DOOR
SURFACE BOLT DETAIL

Located at Top and Bottom of Active Panel
(Interior Side of Panel)

SINGLE OUTSWING DOOR.

- Single Square-Top Panel Configuration Shown.
- Other Allowed Configurations are Shown on Sheet 13.
- Either Right-Hand or Left-Hand.
- Outswing Only.

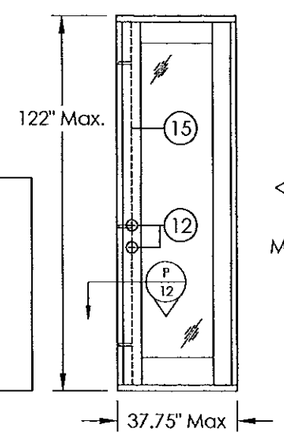

Please See Important Note on Sheet 12 Concerning Strike Plate Anchors

◁ ELEVATION
EXTERIOR VIEW (X)
MULTI-POINT LOCK OPTION A:
5-POINT LOCK
See Details on Sheet 11
Including Shoot Bolt Engagement

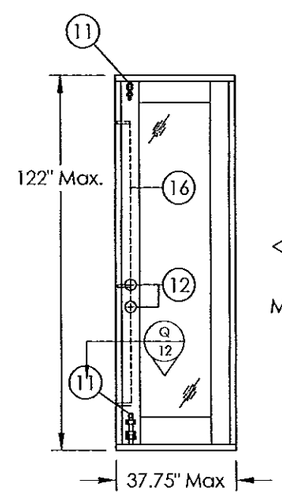

Please See Important Note on Sheet 12 Concerning Strike Plate Anchors

◁ ELEVATION
EXTERIOR VIEW (X)
MULTI-POINT LOCK OPTION B:
3-POINT LOCK
with SURFACE BOLTS
See Details on Sheet 11

PRODUCT REVISED
as complying with the Florida Building Code
Acceptance No. 13-1224.10
Expiration Date 9/11/16
By Miami-Dade Product Control

JUN 25 2014

EMMA T. MELLINGER
LICENSE
No 50049
STATE OF FLORIDA
PROFESSIONAL ENGINEER

REVISIONS

No	Date	By	Description
1	12/17/13	EM	Update to Current FBC
2	2/17/14	EM	Comments per Miami-Dade
3	3/19/14	EM	Comments per Miami-Dade
4	4/9/14	EM	Lock Hardware Clarification
5	6/4/14	EM	Comments per Miami-Dade
6	6/24/14	EM	CMU Anchors, Panel Thickness

CATEGORY 5
Engineering Services, Inc.
1600 S. Federal Highway, #207
Pompano Beach, FL 33062
(954) 784-6991 • CA #25854

Sheet 5 of 13

DRAWING No. EXD 003 R6

OUTSWING GLAZED WOOD DOOR LARGE MISSILE IMPACT RESISTANT

Exclusive Wood Doors, Inc.
1950 NW. 70th Ave, Miami, FL 33126

ELEVATIONS and ANCHOR LAYOUTS (4)

EXCLUSIVE EWD WOOD DOORS

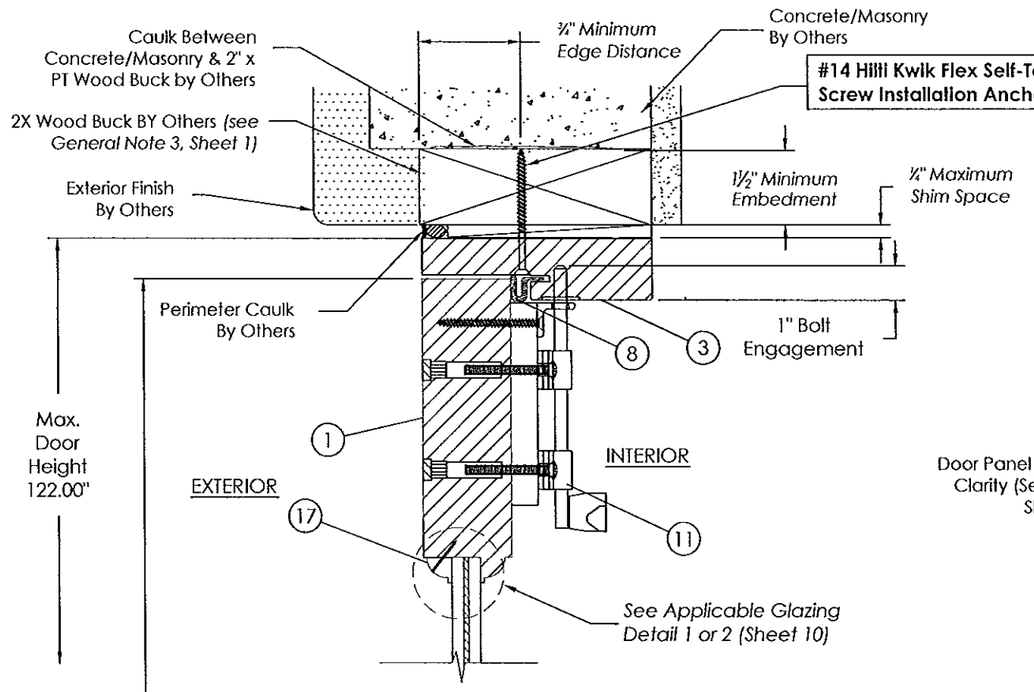

B/6 VERTICAL SECTION
HEAD - 2" X PT WOOD BUCK SHOWN

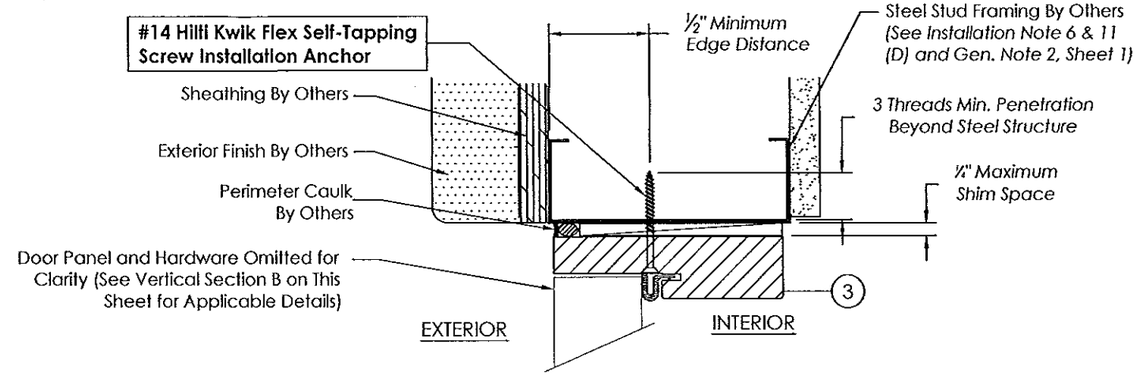

C/6 VERTICAL SECTION
HEAD - STEEL STUD FRAME SHOWN

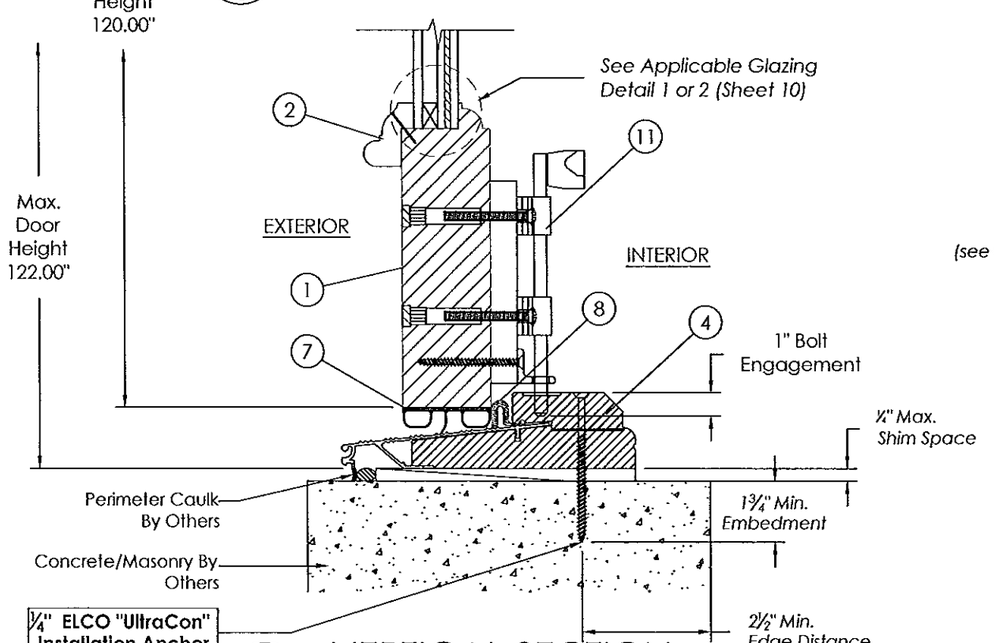

A/6 VERTICAL SECTION
SILL - CONCRETE SHOWN

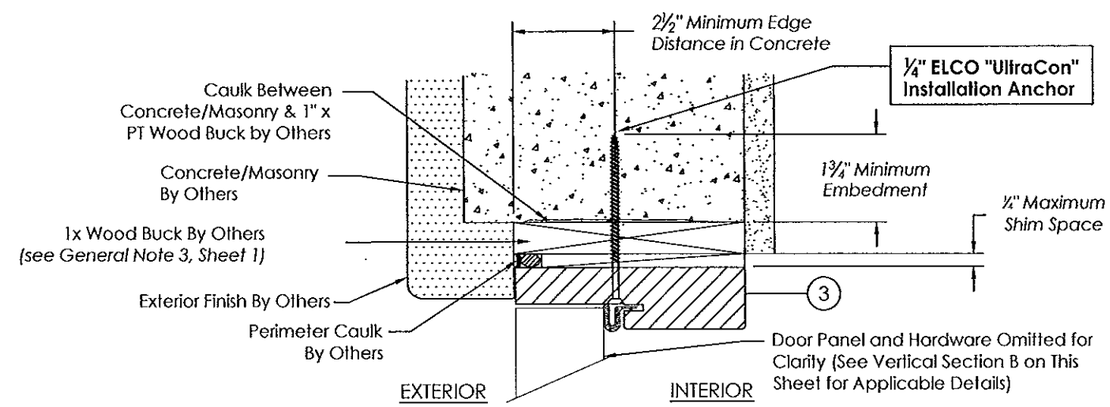

B/6 VERTICAL SECTION
HEAD - 1" X PT WOOD BUCK SHOWN

PRODUCT REVISED
as complying with the Florida Building Code
Acceptance No 13-1224.10
Expiration Date 8/11/16
By
Miami Dade Product Control

JUN 25 2014

EMMA T. MELLINGER
LICENSE
No 50049
STATE OF FLORIDA
PROFESSIONAL ENGINEER

CATEGORY 5
Engineering Services, Inc.
1600 S. Federal Highway, #207
Pompano Beach, FL 33062
(954) 784-6991 • CA #25854

Sheet 6 of 13
DRAWING No. EXD 003 R6

REVISIONS

No	Date	By	Description
1	12/17/13	EM	Update to Current FBC
2	2/17/14	EM	Comments per Miami-Dade
3	3/19/14	EM	Comments per Miami-Dade
4	4/9/14	EM	Lock Hardware Clarification
5	6/4/14	EM	Comments per Miami-Dade
6	6/24/14	EM	CMU Anchors, Panel Thickness

OUTSWING GLAZED WOOD DOOR
LARGE MISSILE IMPACT RESISTANT
Exclusive Wood Doors, Inc.
1950 NW. 70th Ave, Miami, FL 33126

EXCLUSIVE EWD WOOD DOORS

VERTICAL SECTIONS

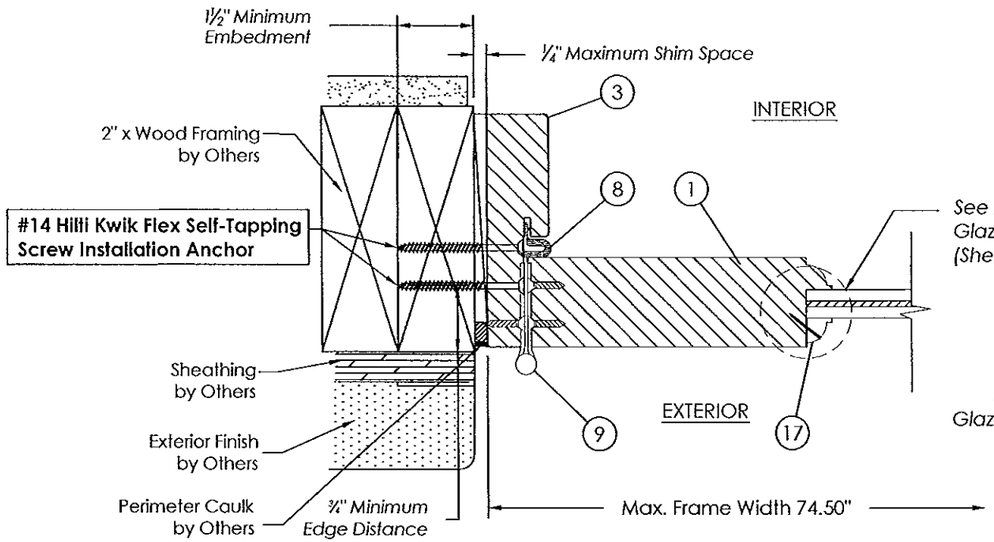

F/7 HORIZONTAL SECTION
JAMB
2" X PT WOOD FRAMING SHOWN

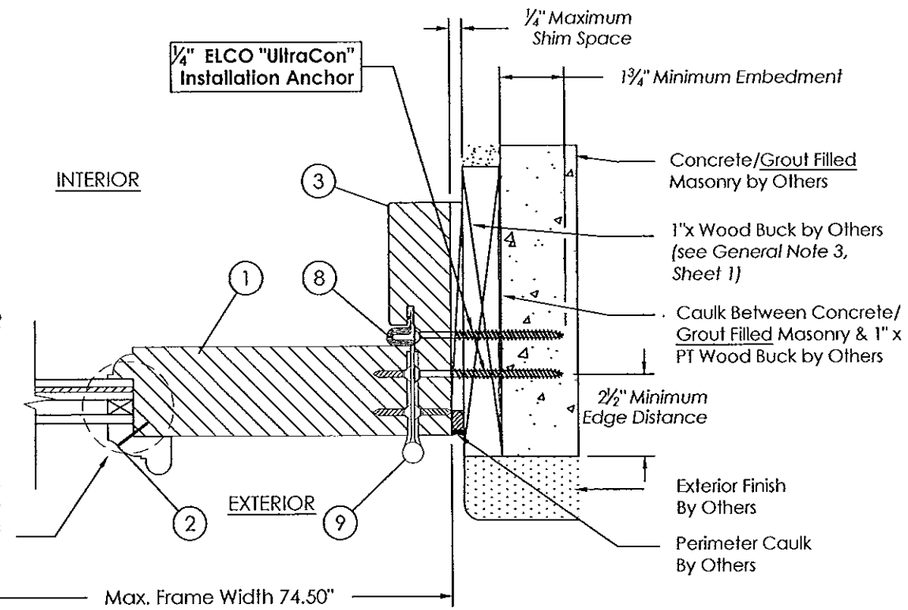

G/7 HORIZONTAL SECTION
JAMB
1" x PT WOOD BUCK and CONCRETE/MASONRY SHOWN

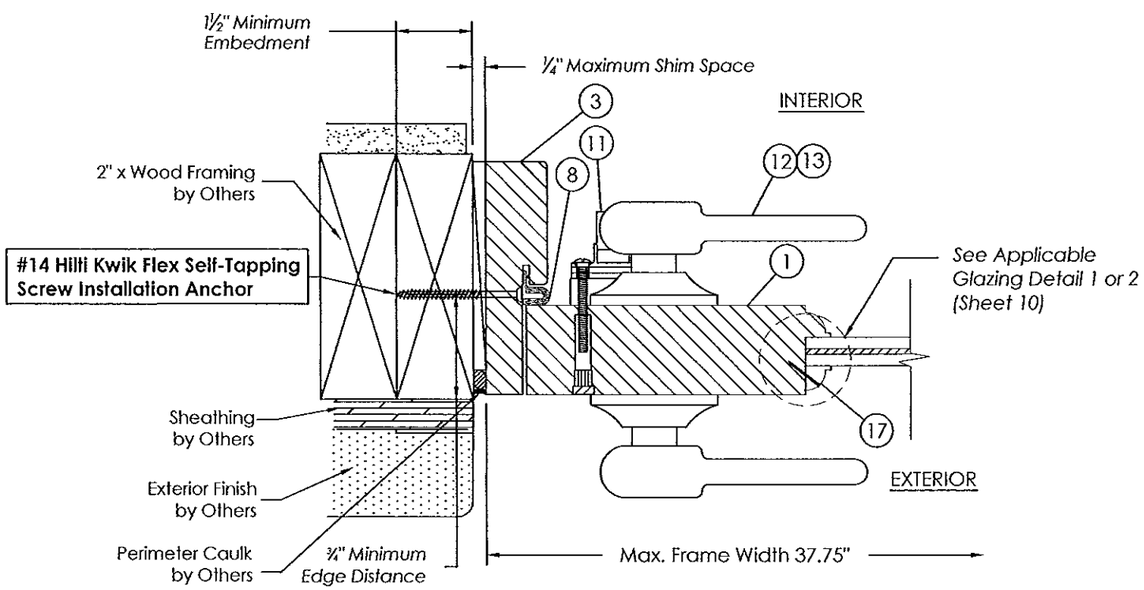

O/7 HORIZONTAL SECTION
SINGLE DOOR (X) JAMB at LOCK STILE
2" X PT WOOD FRAMING SHOWN

PRODUCT REVISED
as complying with the Florida Building Code
Acceptance No. 13-1224.10
Expiration Date 6/11/16
By [illegible]
Miami Dade Product Control

CATEGORY 5
Engineering Services, Inc.
1600 S. Federal Highway, #207
Pompano Beach, FL 33062
(954) 784-6991 • CA #25854

Sheet 7 of 13
DRAWING No. EXD 003 R6

REVISIONS

No	Date	By	Description
1	12/17/13	EM	Update to Curent FBC
2	2/17/14	EM	Comments per Miami-Dade
3	3/19/14	EM	Comments per Miami-Dade
4	4/9/14	EM	Lock Hardware Clarification
5	6/4/14	EM	Comments per Miami-Dade
6	6/24/14	EM	CMU Anchors, Panel Thickness

OUTSWING GLAZED WOOD DOOR LARGE MISSILE IMPACT RESISTANT

Exclusive Wood Doors, Inc.
1950 NW. 70th Ave, Miami, FL 33126

EXCLUSIVE WOOD DOORS EWD

HORIZONTAL SECTIONS

JUN 25 2014

EMMA T. MELLINGER
LICENSE
No 50049
STATE OF FLORIDA
PROFESSIONAL ENGINEER

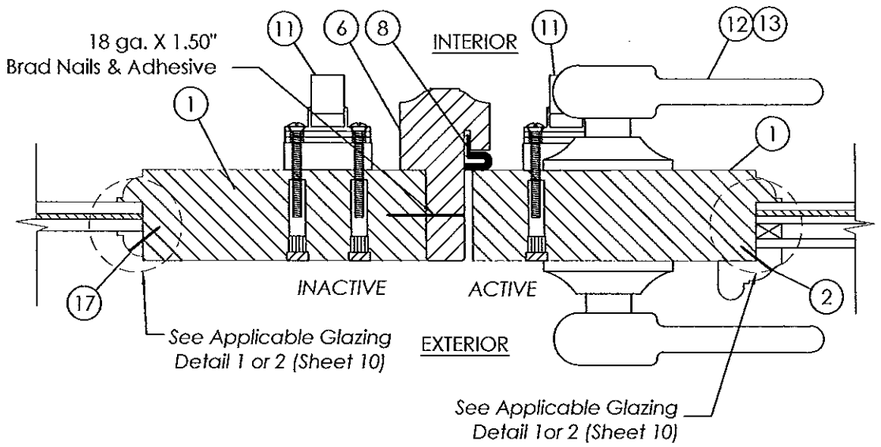

H/8 HORIZONTAL SECTION
ASTRAGAL

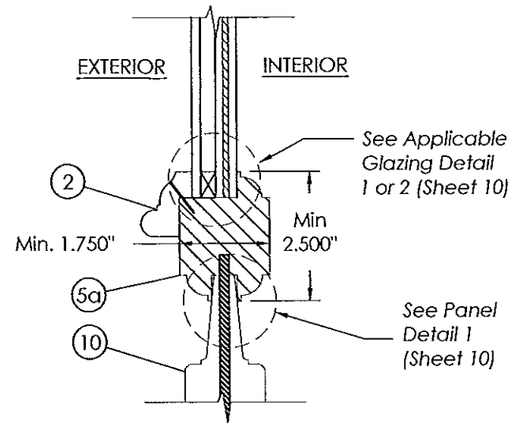

E/8 VERTICAL SECTION
MIDRAIL
GLAZED & PARTIAL RAISED PANEL

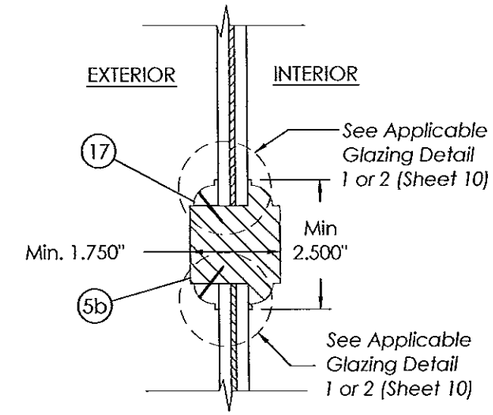

D/8 VERTICAL SECTION
MIDRAIL
FULLY GLAZED

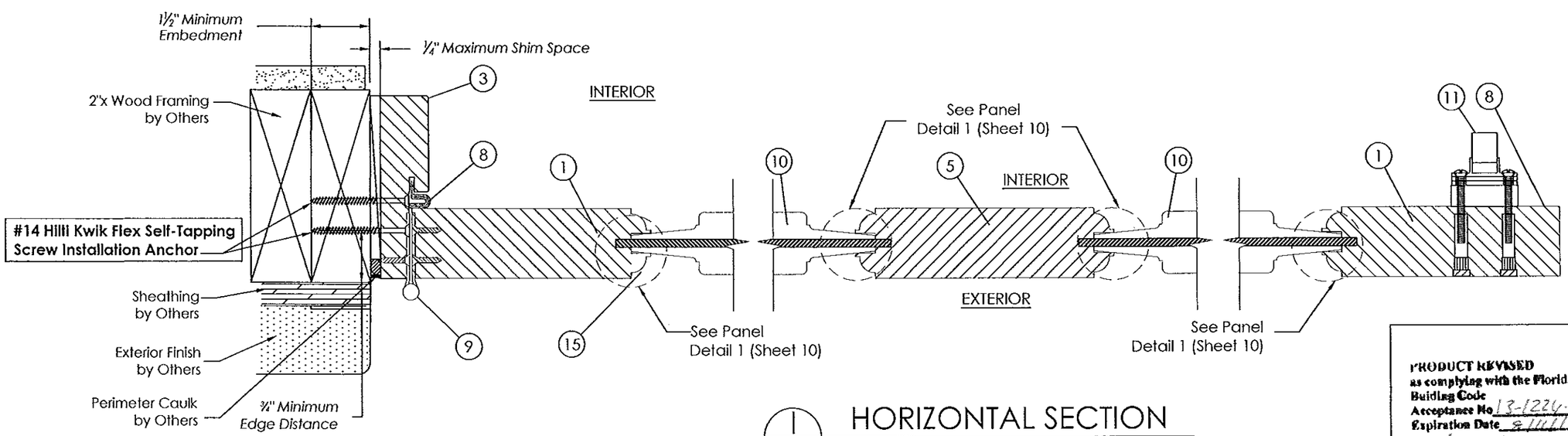

1/8 HORIZONTAL SECTION
RAISED PANEL/MIDSTILE (INACTIVE PANEL)

PRODUCT REVISED
as complying with the Florida Building Code
Acceptance No 13-1224.10
Expiration Date 8/11/16
By Ishaq I. Chaudhuri
Miami Dade Product Control

CATEGORY 5
Engineering Services, Inc.
1600 S. Federal Highway, #207
Pompano Beach, FL 33062
(954) 784-6991 • CA #25854

Sheet 8 of 13
DRAWING No. EXD 003 R6

REVISIONS

No	Date	By	Description
1	12/17/13	EM	Update to Curent FBC
2	2/17/14	EM	Comments per Miami-Dade
3	3/19/14	EM	Comments per Miami-Dade
4	4/9/14	EM	Lock Hardware Clarification
5	6/4/14	EM	Comments per Miami-Dade
6	6/24/14	EM	CMU Anchors, Panel Thickness

OUTSWING GLAZED WOOD DOOR
LARGE MISSILE IMPACT RESISTANT
Exclusive Wood Doors, Inc.
1950 NW. 70th Ave, Miami, FL 33126

EXCLUSIVE WOOD DOORS EWD

DOOR PANEL SECTIONS

JUN 25 2014

EMMA T. MELLINGER
LICENSE
No 50049
STATE OF FLORIDA
PROFESSIONAL ENGINEER

	BILL OF MATERIALS		
ITEM NO.	DESCRIPTION	MATERIAL (See Note)	MANUFACTURER
1	PANEL RAIL/STILE	Mahogany	Exclusive Wood Doors
2	STEPPED GLASS STOP	Mahogany	Exclusive Wood Doors
3	HEAD & JAMB	Mahogany	Exclusive Wood Doors
4	SILL (3-PIECE)	Mahogany and Al 6063-T5	Exclusive Wood Doors
5 (5a)(5b)	MIDRAIL/MIDSTILE	Mahogany	Exclusive Wood Doors
6	ASTRAGAL	Mahogany	Exclusive Wood Doors
7	DOOR SWEEP	Polyurethane	Afco
8	COMPRESSION WEATHERSTRIP	Urethane Foam	Q-Lon
9	4½" x 4½" BUTT HINGE	12 ga. Steel	Penrod
10	RAISED PANEL	Mahogany with Plywood Core	Exclusive Wood Doors
11	SURFACE BOLTS W/ STRIKE PLATE	Stainless Steel	Deltana
12	ENTRY LATCH & DEADBOLT	Hardened Steel	Kwikset
13	INACTIVE STILE FLUSH BOLTS	Hardened Steel	Penrod
14	TWO-POINT LOCK For INACTIVE STILE	Hardened Steel	Trilennium
15	FIVE-PT LOCK FOR ACTIVE STILE	Hardened Steel	Trilennium
16	THREE-PT LOCK For SINGLE DOOR	Hardened Steel	Trilennium
17	1/4-ROUND GLASS STOP	Mahogany	Exclusive Wood Doors
18	GLASS SPACER	Butly Rubber	

NOTE: All "Mahogany" To be one of the Following Materials:

1. Mara Macho (*cedrelinga cateneaformis*); s.g. =0.55; Emin = 1,441 ksi; MOR =9,865 psi.
2. Tropical Walnut (*cariniana estrellensis*); s.g. =0.68; Emin = 1,520 ksi; MOR = 12,032 psi.

Data Referenced from CADEFOR. All s.g. data given at 12% moisture content.

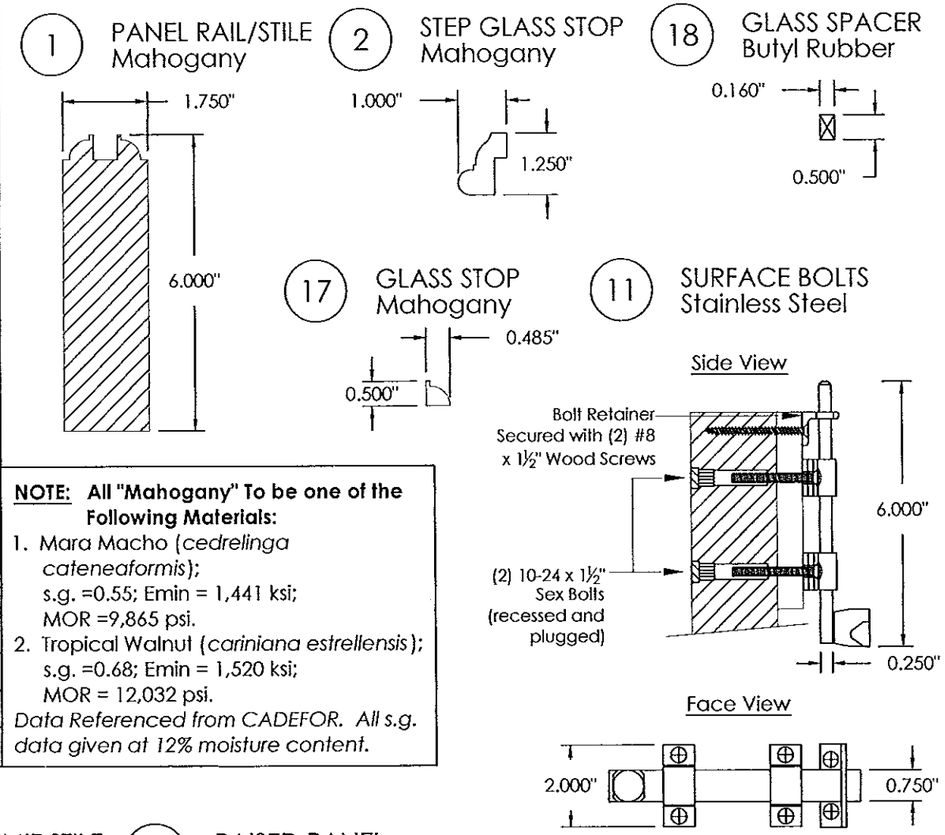

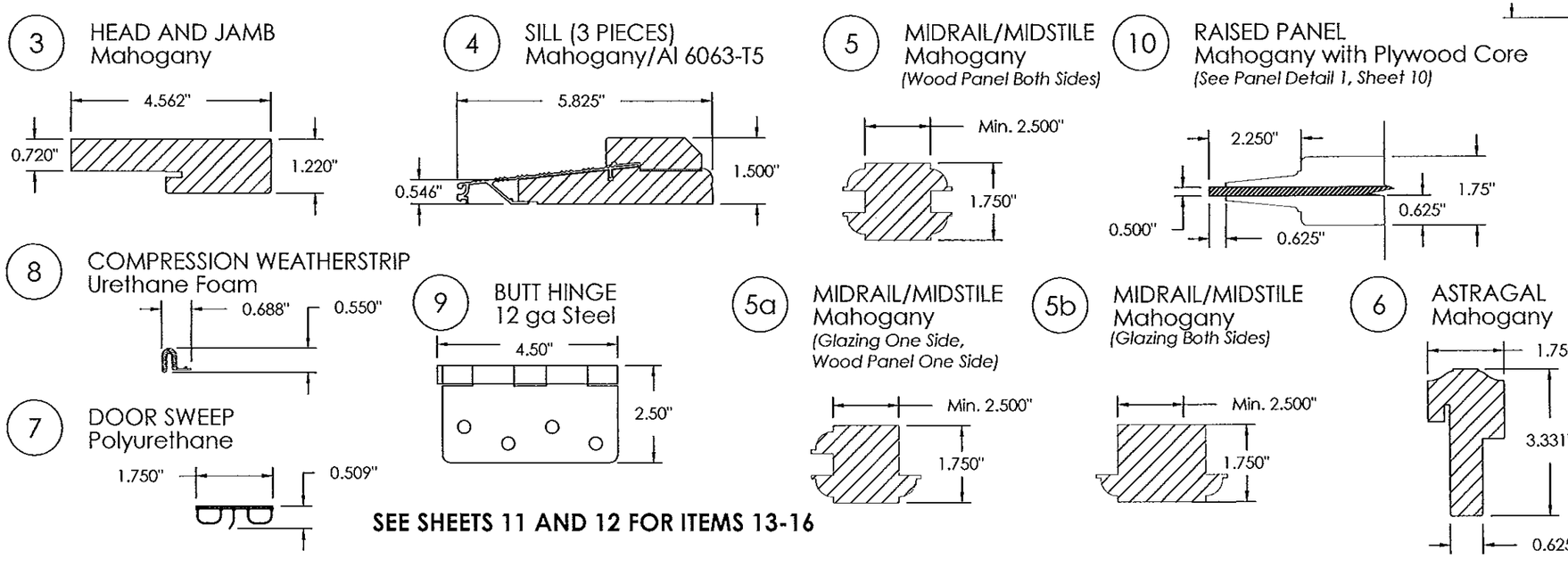

SEE SHEETS 11 AND 12 FOR ITEMS 13-16

PRODUCT REVISED
as complying with the Florida Building Code
Acceptance No 13-1224.10
Inspection Date 8/11/16
By Ishaq I. Chaudhry
Miami Dade Product Control

CATEGORY 5
Engineering Services, Inc.
1600 S. Federal Highway, #207
Pompano Beach, FL 33062
(954) 784-6991 • CA #25854

Sheet 9 of 13

DRAWING No. EXD 003 R6

REVISIONS

No	Date	By	Description
1	12/17/13	EM	Update to Curent FBC
2	2/17/14	EM	Comments per Miami-Dade
3	3/19/14	EM	Comments per Miami-Dade
4	4/9/14	EM	Lock Hardware Clarification
5	6/4/14	EM	Comments per Miami-Dade
6	6/24/14	EM	CMU Anchors, Panel Thickness

OUTSWING GLAZED WOOD DOOR LARGE MISSILE IMPACT RESISTANT

Exclusive Wood Doors, Inc.
1950 NW. 70th Ave, Miami, FL 33126

COMPONENTS and BILL OF MATERIALS

EXCLUSIVE WOOD DOORS EWD

JUN 25 2014

EMMA T. MELLINGER
LICENSE
No 50049
STATE OF FLORIDA
PROFESSIONAL ENGINEER

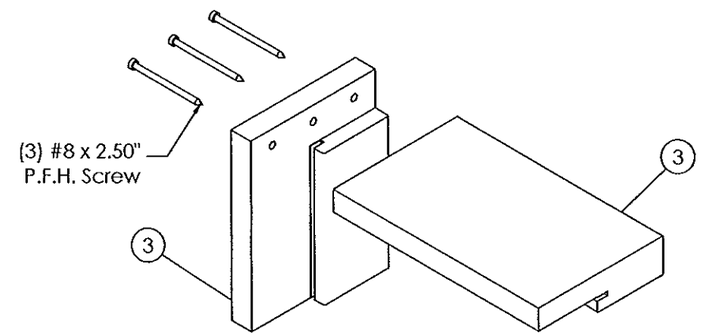

L/10 CORNER SECTION
RECTANGULAR FRAME TOP ASSEMBLY

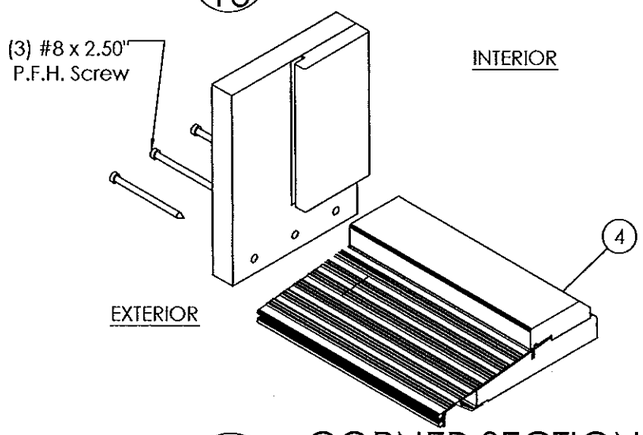

J/10 CORNER SECTION
FRAME BOTTOM ASSEMBLY

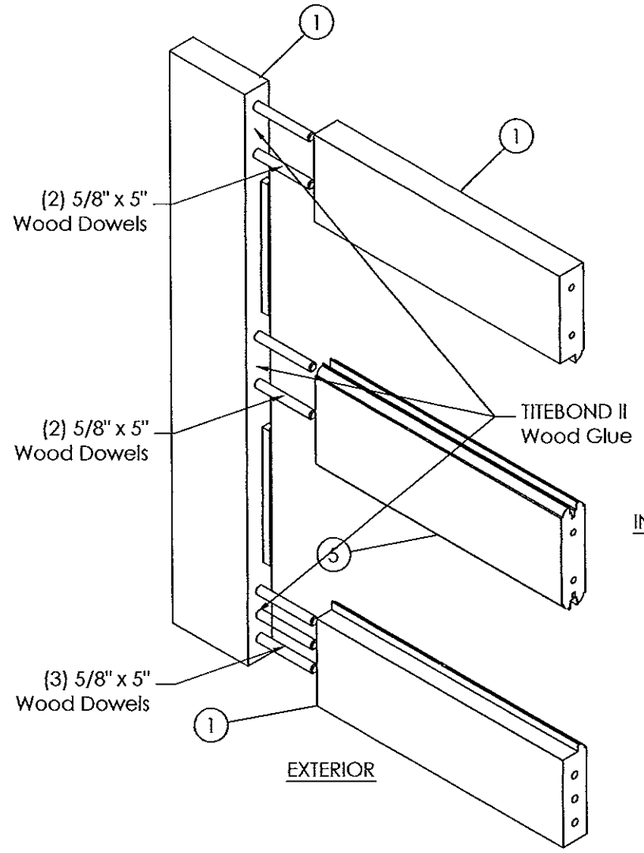

K/10 CORNER SECTION
TOP/BOTTOM PANEL ASSEMBLY, TYP.

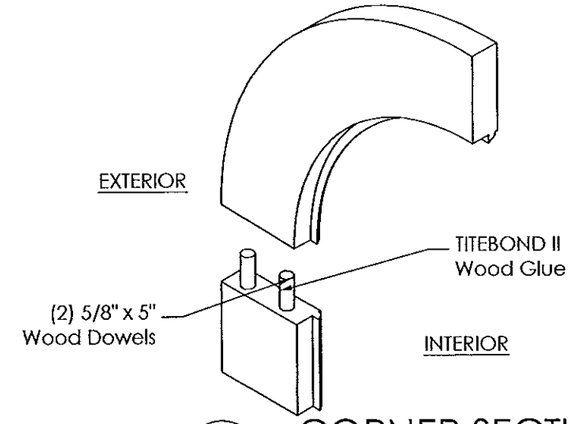

N/10 CORNER SECTION
CURVED PANEL TOP ASSEMBLY, TYP.

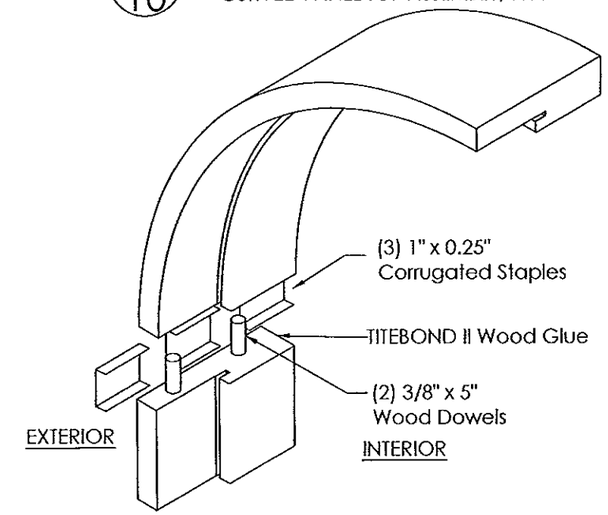

M/10 CORNER SECTION
CURVED FRAME TOP ASSEMBLY, TYP.

BRAD NAIL SPACING AT GLAZING STOPS
- 2" From Corners
- 12" Max. o/c All Sides

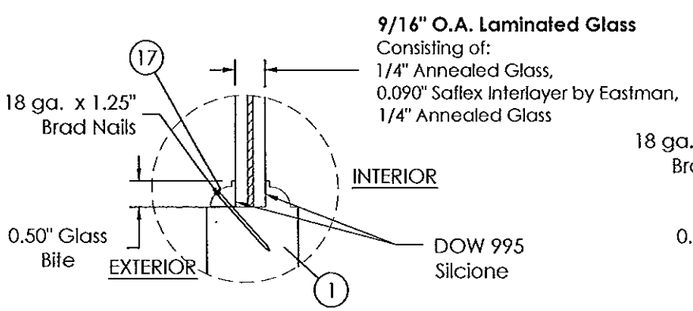

GLAZING DETAIL 1
9/16" ANNEALED LAMINATED GLASS

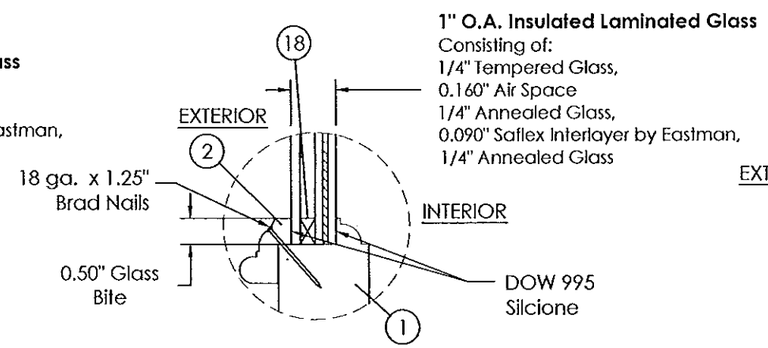

GLAZING DETAIL 2
1" ANNEALED INSULATED LAMINATED GLASS

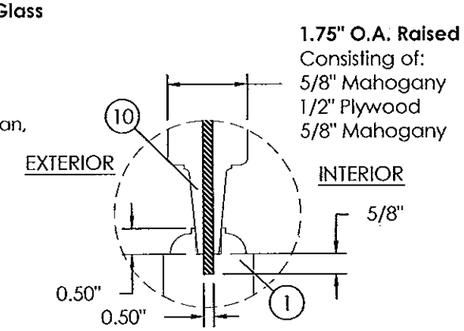

PANEL DETAIL 1
OPAQUE RAISED PANEL

PRODUCT REVISED
as complying with the Florida Building Code
Acceptance No 13-1224.10
Expiration Date 9/11/16
By
Miami Dade Product Control

JUN 25 2014

EMMA T. MELLINGER
LICENSE
No 50049
STATE OF FLORIDA
PROFESSIONAL ENGINEER

CATEGORY 5
Engineering Services, Inc.
1600 S. Federal Highway, #207
Pompano Beach, FL 33062
(954) 784-6991 • CA #25854

Sheet 10 of 13

DRAWING No.
EXD 003 R6

REVISIONS

No	Date	By	Description
1	12/17/13	EM	Update to Curent FBC
2	2/17/14	EM	Comments per Miami-Dade
3	3/19/14	EM	Comments per Miami-Dade
4	4/9/14	EM	Lock Hardware Clarification
5	6/4/14	EM	Comments per Miami-Dade
6	6/22/14	EM	CMU Anchors, Panel Thickness

OUTSWING GLAZED WOOD DOOR LARGE MISSILE IMPACT RESISTANT

Exclusive Wood Doors, Inc.
1950 NW. 70th Ave, Miami, FL 33126

CORNER SECTIONS and GLAZING DETAILS

EXCLUSIVE WOOD DOORS EWD

ITEM (13)

FLUSH BOLT

Located at Top and Bottom of Inactive Door Lock Stile to Secure Inactive Door During Normal Use.
NOT A SUBSTITUTE FOR SURFACE BOLTS

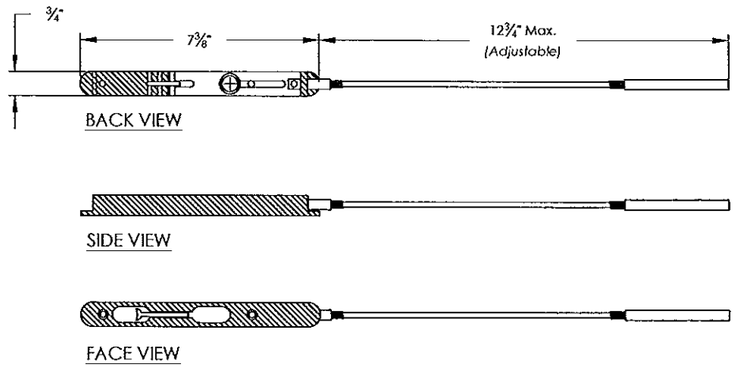

ITEM (14)

TRILENNIUM®

Model 3020 Two-Point Lock for Double Door Inactive Stile

ITEM (15)

TRILENNIUM®

Model 3500 Five-Point Lock for Double Door Active Stile

ITEM (16)

TRILENNIUM®

Model 3000 Three-Point Lock for Single Door

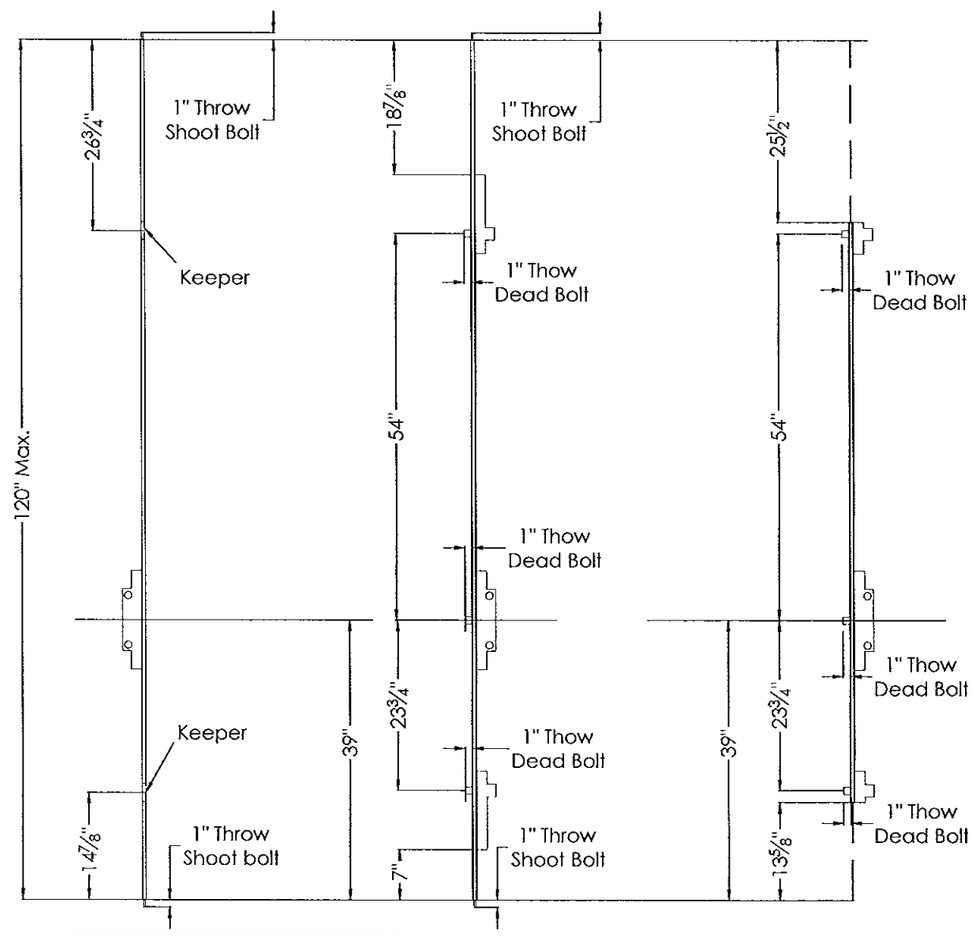

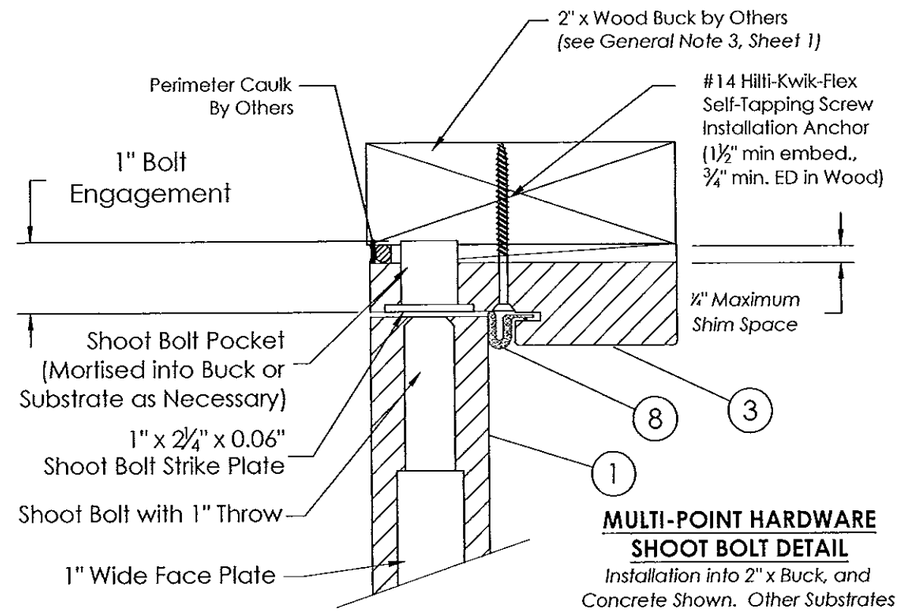

MULTI-POINT HARDWARE SHOOT BOLT DETAIL

Installation into 2" x Buck, and Concrete Shown. Other Substrates and Appropriate Installation Anchors Shall Apply Also.

Please See Important Note on Sheet 12 Concerning Strike Plate Anchors

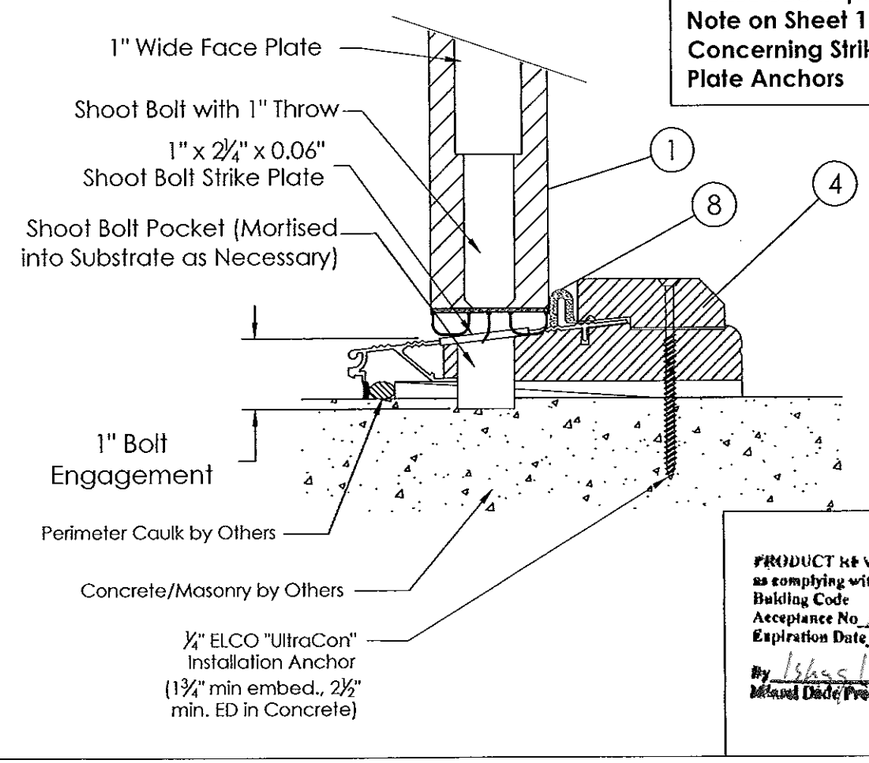

PRODUCT REVISED
as complying with the Florida Building Code
Acceptance No 13-1224.10
Expiration Date 8/11/16
By Ishas L. Chandler
Miami Dade Product Control

CATEGORY 5
Engineering Services, Inc.
1600 S. Federal Highway, #207
Pompano Beach, FL 33062
(954) 784-6991 • CA #25854

Sheet 11 of 13

DRAWING No. EXD 003 R6

REVISIONS

No	Date	By	Description
1	12/17/13	EM	Update to Curent FBC
2	2/17/14	EM	Comments per Miami-Dade
3	3/19/14	EM	Comments per Miami-Dade
4	4/9/14	EM	Lock Hardware Clarification
5	6/4/14	EM	Comments per Miami-Dade
6	6/24/14	EM	CMU Anchors, Panel Thickness

OUTSWING GLAZED WOOD DOOR
LARGE MISSILE IMPACT RESISTANT
Exclusive Wood Doors, Inc.
1950 NW. 70th Ave, Miami, FL 33126

LOCKING HARDWARE DETAILS

EXCLUSIVE WOOD DOORS EWD

JUN 25 2014

EMMA T. MELLINGER
LICENSE
No 50049
STATE OF FLORIDA
PROFESSIONAL ENGINEER

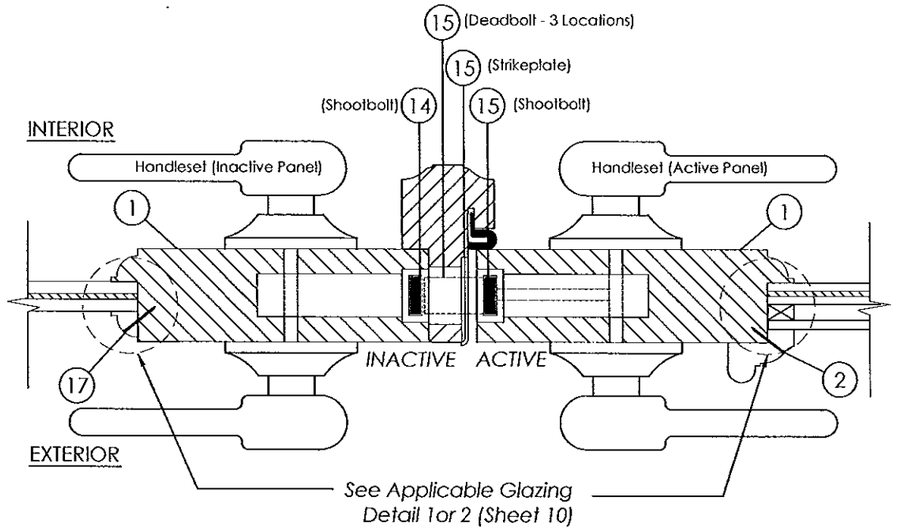

R/12 HORIZONTAL SECTION

MULTI-PONT LOCK OPTION

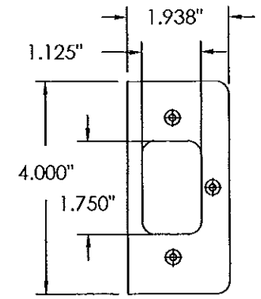

DEADBOLT STRIKE PLATE

Face View

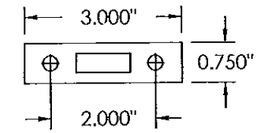

SURFACE BOLT STRIKE PLATE

Exploded View

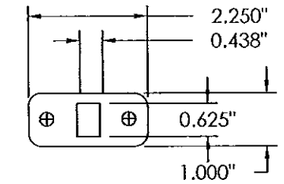

SHOOTBOLT STRIKE PLATE

Face View

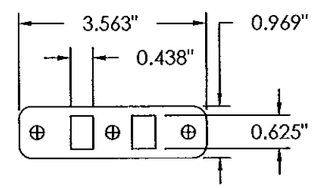

DOUBLE SHOOTBOLT STRIKE PLATE

Face View

IMPORTANT NOTE CONCERNING STRIKE PLATE INSTALLATION

At Each Frame-Mounted Strike Plate, Whether at the Head, the Sill, or the Lock Jamb for a Single Door, at Least ONE INSTALLATION ANCHOR, of the Same Size and Type as Used to Anchor the Frame Shall Also Secure the Strike Plate, Through the Frame and Embed the Required Distance into the Substrate Beneath.
In the Case of **Concrete or Masonry Substrate, ONE** Such Anchor Shall be So Employed.
In the Case of **Wood or Metal Substrate, TWO** Such Anchors Shall be So Employed.

These Anchors May be in Addition to Those Called-out for Frame Installation, or, in Cases Where Spacing Considerations Allow, Anchors May be the Same Anchors as Those Called-out for Frame Installation.

Remaining Strike Plate Screw Holes Shall be Filled with #8 x ¾" FHWS to Secure Strike Plates to Jambs.

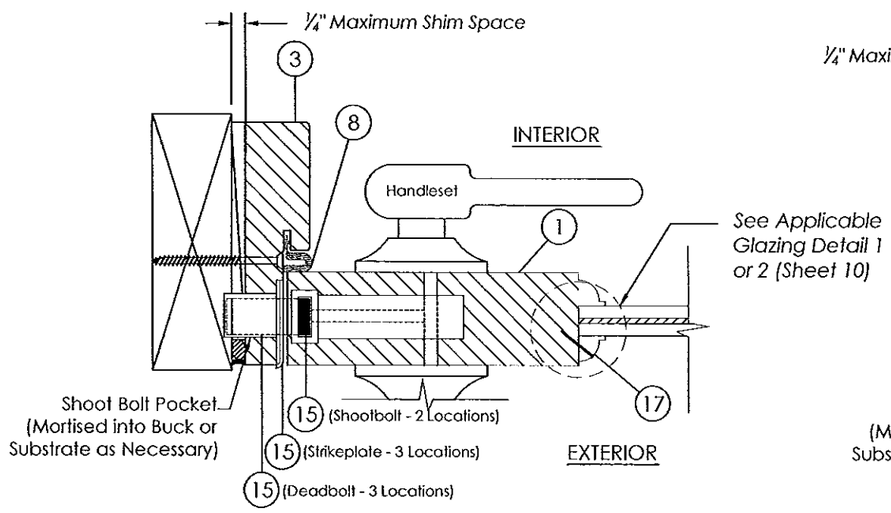

P/12 HORIZONTAL SECTION

SINGLE DOOR MULTIPOINT LOCK OPTION A

See Detail O Sheet 7 Installation

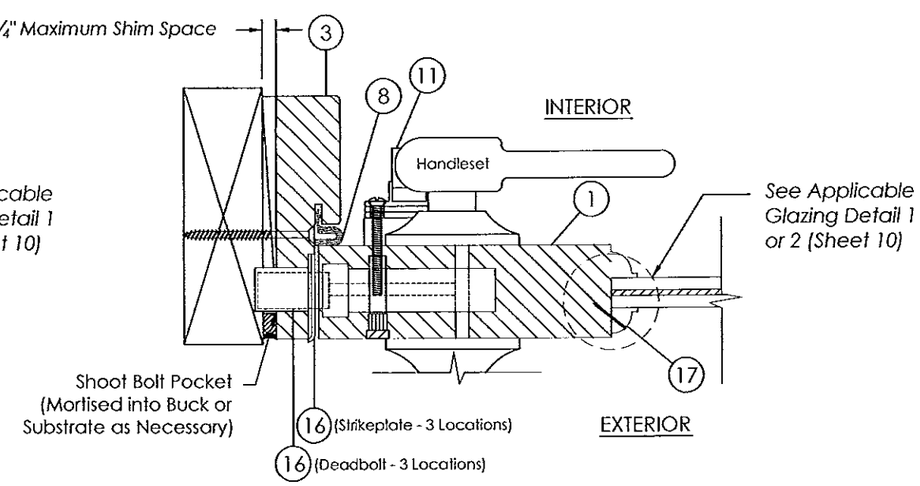

Q/12 HORIZONTAL SECTION

SINGLE DOOR MULTIPOINT LOCK OPTION B

See Detail O Sheet 7 for Installation

PRODUCT REVISED
as complying with the Florida
Building Code
Acceptance No. 13-1224.10
Expiration Date 5/11/16
By [illegible]
Miami Dade Product Control

JUN 25 2014

EMMA T. MELLINGER
LICENSE
No 50049
STATE OF FLORIDA
PROFESSIONAL ENGINEER

CATEGORY 5
Engineering Services, Inc.
1600 S. Federal Highway, #207
Pompano Beach, FL 33062
(954) 784-6991 • CA #25854

DRAWING No. EXD 003 R6

Sheet 12 of 13

REVISIONS

No	Date	By	Description
1	12/17/13	EM	Update to Curent FBC
2	2/17/14	EM	Comments per Miami-Dade
3	3/19/14	EM	Comments per Miami-Dade
4	4/9/14	EM	Lock Hardware Clarification
5	6/4/14	EM	Comments per Miami-Dade
6	6/24/14	EM	CMU Anchors, Panel Thickness

OUTSWING GLAZED WOOD DOOR LARGE MISSILE IMPACT RESISTANT

Exclusive Wood Doors, Inc.
1950 NW. 70th Ave, Miami, FL 33126

LOCKING HARDWARE DETAILS

EXCLUSIVE EWD WOOD DOORS

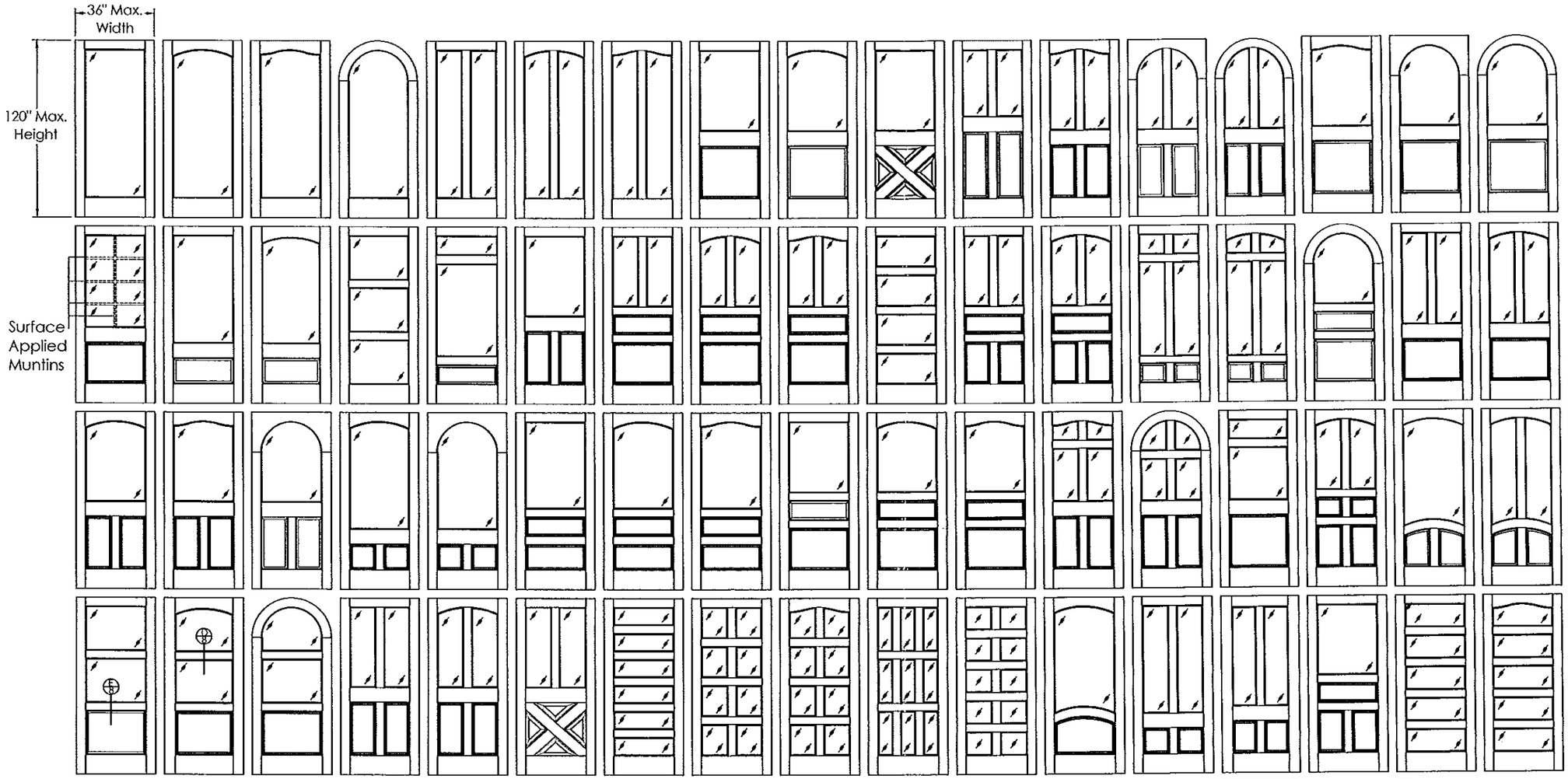

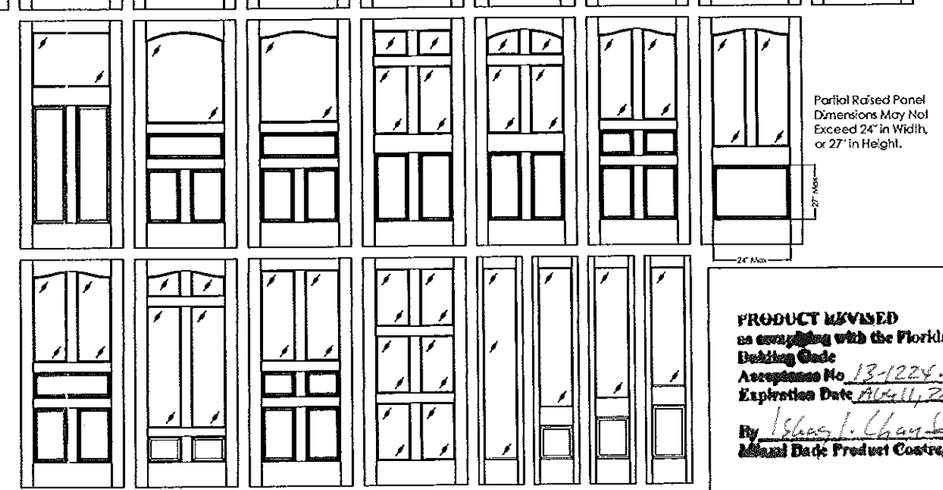

LIMITATIONS:

1. **No True Muntins Allowed:** Surface-Applied Muntins May be Used For Divided Lites, or Lite May be Divided Using Mid-Rails and Stiles.
2. Surface V-Grooves Optional for both Flat and Raised Panels.
3. Min. Stile Size= 6.00" x 1.75"
   Min. Midstile= 2.50" x 1.75"
4. Min. Rail Size= 6.00" x 1.75"
   Min. Midrail= 2.50" x 1.75"
5. Max Raised Panel Width = 24.00"
6. Max Raised Panel Height = 27.00"
7. All Elevations Shown Also Qualify any Other Custom Sizes Smaller than Tested Within FBC Allowed Limits.
8. **Allowable Configurations** are "X", and, "XX", Where "X" Represents an Operable Panel.

NOTE: Door Panels May be Rectangular, Round, or Arch Top.

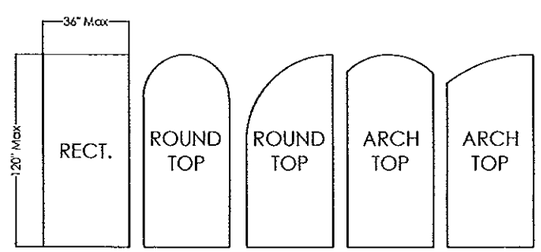

PRODUCT REVISED
as complying with the Florida Building Code
Acceptance No. 13-1224.10
Expiration Date Aug 11, 2016
By Ishaq I. Chaudhary
Miami Dade Product Control

CATEGORY 5
Engineering Services, Inc.
1600 S. Federal Highway, #207
Pompano Beach, FL 33062
(954) 784-6991 • CA #25854

Sheet 13 of 13

DRAWING No. EXD 003 R6

REVISIONS

No	Date	By	Description
1	12/17/13	EM	Update to Current FBC
2	2/17/14	EM	Comments per Miami-Dade
3	3/19/14	EM	Comments per Miami-Dade
4	4/9/14	EM	Lock Hardware Clarification
5	6/4/14	EM	Comments per Miami-Dade
6	6/24/14	EM	CMU Anchors, Panel Thickness

OUTSWING GLAZED WOOD DOOR
LARGE MISSILE IMPACT RESISTANT
Exclusive Wood Doors, Inc.
1950 NW. 70th Ave, Miami, FL 33126

QUALIFIED PANEL CONFIGURATIONS

EXCLUSIVE EWD WOOD DOORS

JUN 25 2014

EMMA T. MELLINGER
LICENSE
No 50049
STATE OF FLORIDA
PROFESSIONAL ENGINEER