MIAMI-DADE COUNTY
DEPARTMENT OF REGULATORY AND ECONOMIC RESOURCES (RER)
BOARD AND CODE ADMINISTRATION DIVISION

MIAMI-DADE COUNTY
PRODUCT CONTROL SECTION
11805 SW 26 Street, Room 208
Miami, Florida 33175-2474
T (786) 315-2590 F (786) 315-2599
www.miamidade.gov/economy

NOTICE OF ACCEPTANCE (NOA)

Acralight Solar, LLC
17752 Mitchell Street North Suite H
Irvine, CA 92614

SCOPE:
This NOA is being issued under the applicable rules and regulations governing the use of construction materials. The documentation submitted has been reviewed and accepted by Miami-Dade County RER- Product Control Section to be used in Miami Dade County and other areas where allowed by the Authority Having Jurisdiction (AHJ).

This NOA shall not be valid after the expiration date stated below. The Miami-Dade County Product Control Section (In Miami Dade County) and/or the AHJ (in areas other than Miami Dade County) reserve the right to have this product or material tested for quality assurance purposes. If this product or material fails to perform in the accepted manner, the manufacturer will incur the expense of such testing and the AHJ may immediately revoke, modify, or suspend the use of such product or material within their jurisdiction. RER reserves the right to revoke this acceptance, if it is determined by Miami-Dade County Product Control Section that this product or material fails to meet the requirements of the applicable building code.

This product is approved as described herein, and has been designed to comply with the High Velocity Hurricane Zone of the Florida Building Code.

DESCRIPTION: 1-1/4" Insulated Laminated Glass Skylight Systems

APPROVAL DOCUMENT: Drawing No. LMI-1, titled "Acralight Solar Skylights Tubular Skylight System" sheets 1 through 28 of 28, sheet G1 of G1, and sheets FAB1 through FAB4, dated March 05, 2012, signed & sealed by Leon Murray, P.E., on May 28, 2014, bearing the Miami-Dade County Product Control Revision stamp with the Notice of Acceptance number and the expiration date by the Miami-Dade County Product Control Section.

MISSILE IMPACT RATING: Large and Small Missile Impact Resistant

LABELING: Each unit shall bear a permanent label with the manufacturer's name or logo, Tucson, AZ, and the following statement: "Miami-Dade County Product Control Approved", unless otherwise noted herein.

RENEWAL of this NOA shall be considered after a renewal application has been filed and there has been no change in the applicable building code negatively affecting the performance of this product.

TERMINATION of this NOA will occur after the expiration date or if there has been a revision or change in the materials, use, and/or manufacture of the product or process. Misuse of this NOA as an endorsement of any product, for sales, advertising or any other purposes shall automatically terminate this NOA. Failure to comply with any section of this NOA shall be cause for termination and removal of NOA.

ADVERTISEMENT: The NOA number preceded by the words Miami-Dade County, Florida, and followed by the expiration date may be displayed in advertising literature. If any portion of the NOA is displayed, then it shall be done in its entirety.

INSPECTION: A copy of this entire NOA shall be provided to the user by the manufacturer or its distributors and shall be available for inspection at the job site at the request of the Building Official.

This NOA **revises NOA #11-1014.01** and consists of this page 1, evidence submitted page E-1 as well as approval document mentioned above.
The submitted documentation was reviewed by **Helmy A. Makar, P.E., M.S.**

MIAMI-DADE COUNTY APPROVED

10/16/2014

NOA No. 14-0102.06
Expiration Date: 11/15/2017
Approval Date: 10/16/2014

Acralight Solar,LLC

NOTICE OF ACCEPTANCE: EVIDENCE SUBMITTED

1. EVIDENCE SUBMITTED UNDER PREVIOUS APPROVAL # 11-1014.01

A. DRAWINGS

1. *Drawing No. LMI-1, titled "Acralight Int'l. Skylights Tubular Skylight System" sheets 1 through 28 of 28, sheet G1 of G1, and sheets FAB1 through FAB4, dated March 05, 2012, signed & sealed by by Leon Murray, P.E., on August 02, 2012.*

B. TESTS

1. *Test report on Large Missile Impact Test, Cyclic Load Test, and Uniform Static air Pressure Test on Acralight International Tubular Skylight System, prepared by Hurricane Testing Laboratory, Report No. 0503-0211-08 & 0503-0903-09, dated 08/15/2011, signed and sealed by Vinu J. Abraham, P.E.*

C. CALCULATIONS

1. *Calculation titled " Acralight International Skylights ", Sheets C1, C2, A1 through A7, S1 & S2, T1 through T4, R1 through R12, P1 through P8, dated 10/03/2011, signed and sealed by Leon B. Murray, P.E.*

D. QUALITY ASSURANCE

1. *By Miami-Dade County Department of Regulatory and Economic Resources.*

E. *MATERIAL CERTIFICATIONS*

1. *Die / Part Drawing with the Chemical Composition and Alloy Temper.*

F. OTHERS

1. *Compliance letter with the FBC, 2010 Edition, prepared by Leon Murray, P.E., signed & sealed by Leon B. Murray, P.E., on 11/08/2012.*

2. EVIDENCE SUBMITTED UNDER PREVIOUS APPROVAL # 11-1014.01

A. DRAWINGS

1. *Drawing No. LMI-1, titled "Acralight Solar Skylights Tubular Skylight System" sheets 1 through 28 of 28, sheet G1 of G1, and sheets FAB1 through FAB4, dated March 05, 2012, signed & sealed by by Leon Murray, P.E., on May 28, 2014.*

B. TESTS

1. *None.*

C. CALCULATIONS

1. *None.*

D. QUALITY ASSURANCE

1. *By Miami-Dade County Department of Regulatory and Economic Resources.*

E. *MATERIAL CERTIFICATIONS*

1. *None.*

F. OTHERS

1. *Compliance letter with the FBC, 2010 Edition, prepared by Leon Murray, P.E., signed & sealed by Leon B. Murray, P.E., on May 28, 2014.*

Helmy A. Makar, P.E., M.S.
Product Control Unit Supervisor
NOA No. 14-0102.06
Expiration Date: 11/15/2017
Approval Date: 10/16/2014

ACRALIGHT SOLAR SKYLIGHTS TUBULAR SKYLIGHT SYSTEM

1.) SYSTEM DESCRIPTION : ACRALIGHT SOLAR STANDARD SKYLIGHT SYSTEM CONSISTS OF AN EXTRUDED ALUMINUM (6061-T6) STRUCTURAL FRAME. THE COMPONENTS SHOWN ON THE FOLLOWING PAGES ARE SPECIFICALLY ENGINEERED TO CONFORM TO A PARTICULAR CUSTOM PROJECT. THE EXTRUDED ALUMINUM FRAME IS STRUCTURALLY ATTACHED BY MEANS OF SCREW BOSS', ALUMINUM ANGLE CLIPS, ALUMINUM ANCHOR PLATES AND ALUMINUM GUSSET PLATES. THE GLAZING PANELS ARE HELD TO THE STRUCTURAL ALUMINUM SYSTEM WITH ALUMINUM PRESSURE BARS AND ALUMINUM ANGLE COVERS (6063-T5). THE PRESSURE BARS HAVE 1/4"Ø-20 STAINLESS STEEL PAN HEAD MACHINE SCREWS @ 6"o.c. THE SCREWS ENGAGE A SERRATED SCREW BOSS IN THE STRUCTURAL MEMBER BELOW. EPDM GASKETS (1/8" X 1/2") WITH A DUROMETER OF 50 ±5 ARE FITTED INTO RACES OF THE STRUCTURAL MEMBERS AND THE PRESSURE BARS TO SEPARATE THE ALUMINUM FROM THE GLAZING. THE PERIMETER ANGLE COVERS HAVE #14 X 1/2" STAINLESS STEEL HEX HEAD TAPPING SCREWS @ 8"o.c. CLOSED CELL FOAM GLAZING TAPE WITH 1 SIDE ADHESIVE AT CAP TO SEPARATE THE CAP FROM THE GLAZING. A SILICONE CAPSEAL AND/OR ALUMINUM SNAP-ON COVERS ARE APPLIED TO PREVENT AIR AND WATER INFILTRATION.

2.) SKYLIGHT TYPES : ALL CUSTOM DESIGNED SKYLIGHTS ARE UNIQUE AND VIRTUALLY ONE-OF-A-KIND PER THE REQUIREMENTS OF A PARTICULAR PROJECT. ALTHOUGH UNIQUE, GENERALLY ALL CUSTOM SKYLIGHTS FALL INTO ONE (OR A HYBRID) OF THE FOLLOWING TYPES : SINGLE PITCH, LEAN-TO, GREENHOUSE, PYRAMID, POLYGON, RIDGELITE, HIPPED RIDGELITE, SEGMENTED VAULT AND SEGMENTED POLYGON. THE TEST MOCK-UPS AS DETAILED IN THE FOLLOWING PAGES HAVE BEEN DEVELOPED TO INCORPORATE THE STANDARD DETAILS USED IN MOST SKYLIGHT PROJECTS, i.e; CURB, RAFTER, JACK RAFTER, CROSS RAFTER, HIP/KNEE AND HEAD. THE DESIGN LOAD AND THE GLASS TYPE AND SIZE WERE DESIGNED TO SUIT MOST SKYLIGHT PROJECTS. FOR OTHER SKYLIGHT TYPES NOT SHOWN IN THIS TEST REPORT, PLEASE SEE SEPARATE ENGINEERING EVALUATIONS. EXAMPLES OF THESE SKYLIGHT TYPES ARE SHOWN BELOW :

3.) CATEGORY : SKYLIGHTS / MATERIAL : ALUMINUM / DESCRIPTION : HURRICANE RESISTANT SKYLIGHTS
IMPACT : LARGE MISSLE IMPACT / MDP+ : 80 PSF / MDP- : 90 PSF / CLASS : HIGH VELOCITY HURRICANE ZONE

ACRALIGHT SOLAR TESTING LEGEND

PRODUCT APPROVAL TESTING
PER TAS-201, TAS-202, TAS-203

STANDARD DETAILS TESTED :

Ⓒ CURBS :
2 PIECE SILL SEE DETAIL A-5 & A-13

Ⓡ RAFTERS :
6"DP. RAFTER SEE DETAIL A-6 & A-15

Ⓙ JACK/CROSS RAFTERS :
4"DP. JACK RAFTER SEE DETAIL A-8
3"DP. PURLIN ASSEMBLY SEE DETAIL A-12
2 3/4"DP. CROSS RAFTER SEE DET A-5

Ⓗ HIP/KNEES : SEE DETAIL A-10

Ⓗ HEAD : SEE DETAIL A-12 & A-14

PLEASE SEE DETAIL DRAWINGS PAGES #5 THRU THROUGH #20 FOR COMPLETE SPECIFICATIONS OF MOCK-UPS TESTED.

THESE DRAWINGS ARE THE PROPERTY OF ACRALIGHT SOLAR. AND ARE SUBMITTED IN CONFIDENCE FOR A SPECIFIC PURPOSE. THEY ARE NOT TO BE DISTRIBUTED NOR ANY INFORMATION OR DESIGNS CONTAINED HEREIN DISCLOSED TO OTHERS. ©copyright ACRALIGHT SOLAR

CONTENTS

PAGE #1 : SKYLIGHT DESCRIPTIONS, TESTING LEGEND
PAGE #2 : GENERAL NOTES
PAGE #3 : UNIT "A" ELEVATION / FULL SECTION
PAGE #4 : UNIT "B" PLAN VIEW / FULL SECTIONS
PAGE #5 : UNIT "A" SILL CURB
PAGE #6 : UNIT "A" RAFTER
PAGE #7 : UNIT "A" END RAFTER
PAGE #8 : UNIT "A" CROSS RAFTER
PAGE #9 : UNIT "A" HIP/KNEE SECTION-HALF SCALE
PAGE #10 : UNIT "A" HIP/KNEE SECTION
PAGE #11 : UNIT "A" HEAD SECTION-HALF SCALE
PAGE #12 : UNIT "A" HEAD SECTION
PAGE #13 : UNIT "B" SILL SECTION
PAGE #14 : UNIT "B" HEAD SECTION
PAGE #15 : UNIT "B" RAFTER SECTION
PAGE #16 : UNIT "B" END RAFTER SECTION
PAGE #17 : CAP ANCHORS & GLAZING BLOCK DESC.
PAGE #18 : CLIP CONNECTION DETAILS
PAGE #19 : 6" DP. RAFTER SECTION PROPERTIES & ALUM. DESC.
PAGE #20 : 4" DP. RAFTER SECTION PROPERTIES & ALUM. DESC.
PAGE #21 : 2 3/4" DP. RAFTER SECTION PROPERTIES & ALUM. DESC.
PAGE #22 : 3" DP. RAFTER SECTION PROPERTIES & ALUM. DESC.
PAGE #23 : RAFTER SNAP COVER SECTION PROPERTIES & ALUM. DESC.
PAGE #24 : RAFTER PRESSURE BAR SECTION PROPERTIES & ALUM. DESC.
PAGE #25 : HIP/RIDGE SNAP COVER SECTION PROPERTIES & ALUM. DESC.
PAGE #26 : HIP/RIDGE PRESSURE BAR SECTION PROPERTIES & ALUM. DESC.
PAGE #27 : PURLIN SNAP BOTTOM SECTION PROPERTIES & ALUM. DESC.
PAGE #28 : MISCELLANEOUS SECTION PROPERTIES & ALUM. DESC.
G1: GLASS PANEL DIMENSIONS
FAB1 thru FAB4: FABRICATION DETAILS

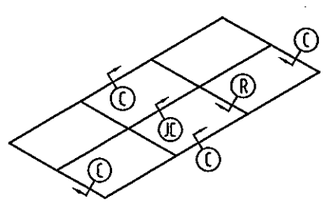

SQUARE/RECTANGULAR

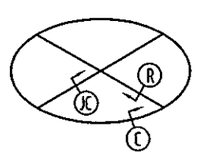

CIRCULAR/ELLIPTICAL

SINGLE PITCH

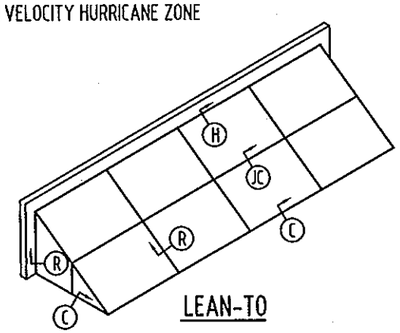

LEAN-TO

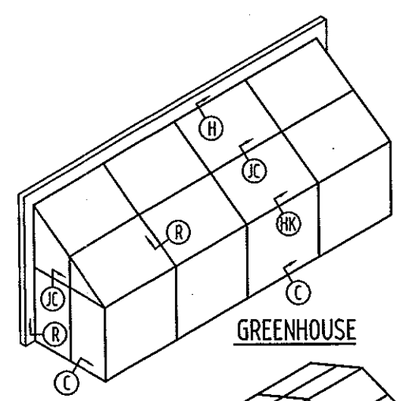

GREENHOUSE

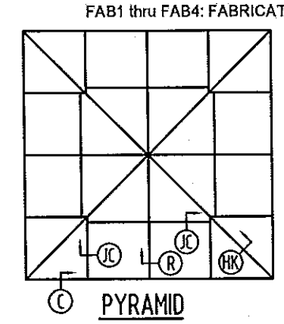

PYRAMID

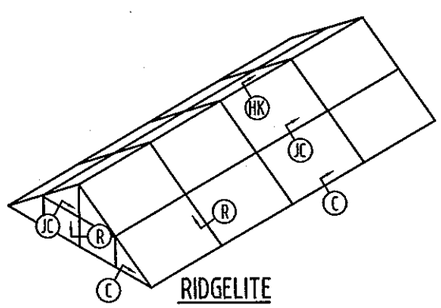

RIDGELITE

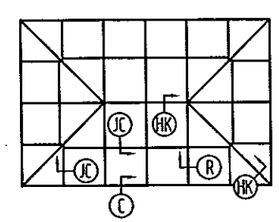

DOUBLE HIP RIDGE

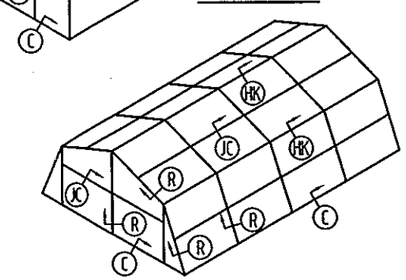

SEGMENTED VAULT

Leon Murray 207-651-3064
1172 Lebanon Road
North Berwick, ME 03906
Florida License No: 57110
May 28,2014

DADE COUNTY USE

PRODUCT REVISED
as complying with the Florida Building Code
Acceptance No 14-0102.06
Expiration Date 11/15/2017
By
Miami Dade Product Control

ENGINEER STAMP

LEON MURRAY
LICENSE
No 57110
STATE OF FLORIDA
PROFESSIONAL ENGINEER

10-04-2014

CUSTOMER PHONE :
PROJECT # : DADETEST_LMI-1
PHASE :
DRAWN BY : BBR
REVIEWED BY :
DATE : 03/05/12

PROJECT NAME : LARGE MISSLE IMPACT TEST SKYLIGHTS FOR DADE COUNTY, FL

ACRALIGHT SOLAR
CALIFORNIA OFFICE: 17752 MITCHELL N. SUITE H, IRVINE, CA. 92614

GENERAL NOTES :

1.) LARGE MISSLE GLAZING TYPES TESTED :

(A) Glass Type "A" (IG) Insulated Glass consisted of a laminate glass lite with an overall thickness of 1-1/4" (nominal) constructed using the following components.

¼" Heat Strengthened Glass (Outboard)
½" Airspace (silicone sealed w/ metal spacer @ perimeter)
¼" Clear Heat Strengthened Glass
0.090" DuPont SentryGlas® ionoplast interlayer (Miami-Dade NOA #09-0312.03)
¼" Heat Strengthened Glass (Inboard)

2.) APPROVED UP TO A MAXIMUM LITE SIZE OF 30 SQ. FT. - SEE DIAGRAM THIS PAGE

3.) THIS SYSTEM IS APPROVED FOR DESIGN PRESSURES UP TO +80 PSF/-90 PSF

4.) LARGE MISSLE IMPACT TESTED. THIS GLAZING PRODUCT IS APPROVED FOR USE FROM GRADE UP TO 30', OR HIGHER IF REQUIRED.

5.) THE ALUMINUM EXTRUSIONS TESTED WERE SIZED PER STRUCTURAL CALCULATIONS TO SUIT THE SPANS AND DESIGN PRESSURE TESTED.

6.) ALL SEALANT APPLIED SHALL BE DOW CORNING 795 SILICONE @ PERIMTER AND 995 @ GLAZING .

7.) ALUMINUM CONTACTING MATERIALS NOT CONSIDERED COMPATABLE SHALL BE PROTECTED PER SECTION 2003.8.4.2 OF THE FLORIDA BUILDING CODE, 2010 EDITION.

8.) THIS APPROVAL IS LIMITED TO THE MAXIMUM AREA OF THE TESTED GLAZING, THE FULLY ASSEMBLED GLAZING SYSTEM TO THE SUPPORTING RAFTERS AND THE MAXIMUM DESIGN PRESSURE SHOWN ON THESE DRAWINGS.

9.) THE SUPPORTING STRUCTURAL MEMBERS AT THE SILL, HEAD AND SIDES OF THE TESTED UNIT IS NOT A PART OF THIS APPROVAL. THE STRUCTURAL ADEQUACY OF THESE SUPPORTING MEMBERS FOR A SPECIFIC PROJECT SHALL BE REVIEWED BY THE STRUCTURAL PLANS EXAMINER OF THE CORRESPONDING BUILDING DEPARTMENT.

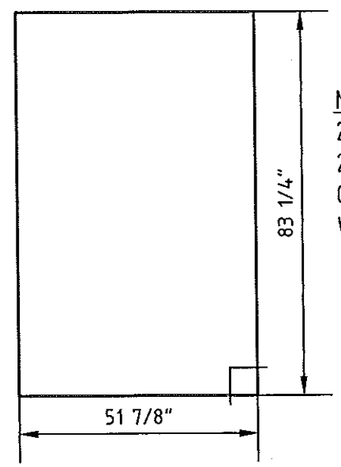

MAXIMUM GLASS LITE SIZE TESTED DESCRIPTION "A"
29.75 SQ. FT. LITE SIZE
27.90 SQ. FT. DAYLIGHT OPENING AREA
GLASS BITE IS 5/8" MIN.
WEATHERSTRIPPING : NONE USED

DADE COUNTY USE

PRODUCT REVISED
as complying with the Florida Building Code
Acceptance No 14-0102.06
Expiration Date 11/15/2017
By
Miami Dade Product Control

ENGINEER STAMP

LEON MURRAY
LICENSE
No 57110
STATE OF
FLORIDA
PROFESSIONAL ENGINEER

Leon Murray 207-651-3064
1172 Lebanon Road
North Berwick, ME 03906
Florida License No: 57110
May 28, 2014

CUSTOMER PHONE :
PROJECT # : DADETEST_LMI-1
PHASE :
DRAWN BY : BBR
REVIEWED BY :
DATE : 03/05/12
PROJECT NAME : LARGE MISSLE IMPACT TEST SKYLIGHTS FOR DADE COUNTY, FL

ACRALIGHT SOLAR
CALIFORNIA OFFICE: 17752 MITCHELL N. SUITE H, IRVINE, CA. 92614

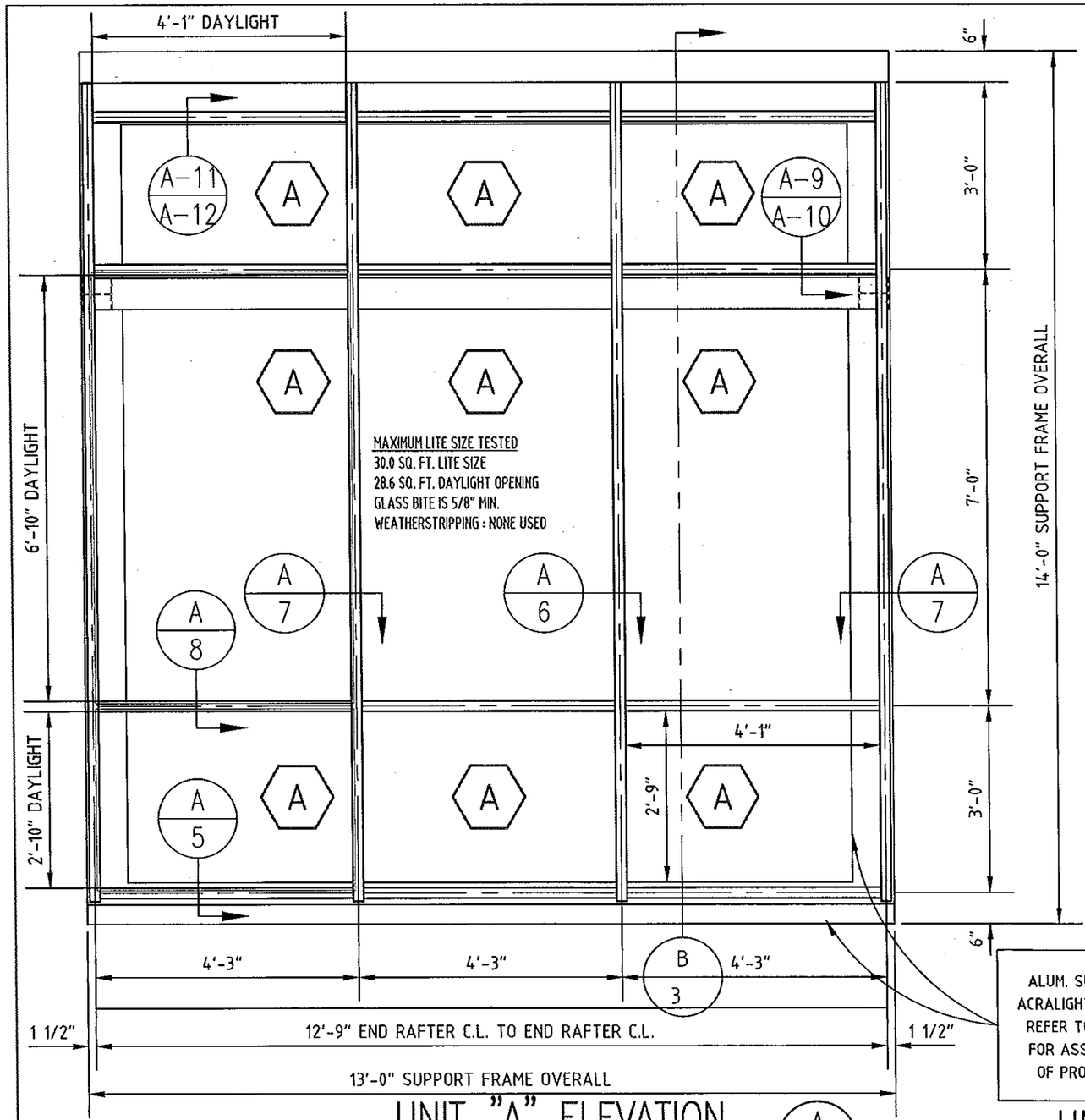

UNIT "A" ELEVATION (A/3)

SCALE : 1/2" = 1'-0"

ALUM. SUPPORT FRAME BY ACRALIGHT SOLAR SKYLIGHTS REFER TO SECTION DETAILS FOR ASSEMBLY (NOT PART OF PRODUCT APPROVAL)

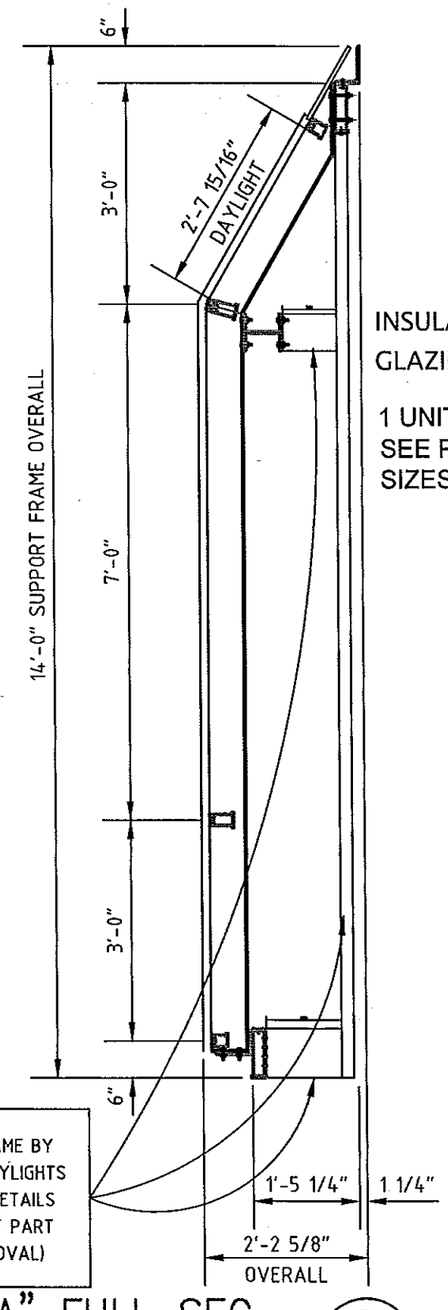

UNIT "A" FULL SEC. (B/3)

SCALE : 1/2" = 1'-0"

INSULATING GLAZING UNIT (I.G.U.)
GLAZING PER PAGE #2 DESC. "A"

1 UNIT TOTAL W/ I.G. GLAZING
SEE PAGE 17 FOR FASTENER SIZES

DADE COUNTY USE

PRODUCT REVISED
as complying with the Florida Building Code
Acceptance No 14-0102.06
Expiration Date 11/15/2017
By
Miami Dade Product Control

ENGINEER STAMP

LEON MURRAY
LICENSE
No 57110
STATE OF
FLORIDA
PROFESSIONAL ENGINEER

CUSTOMER PHONE :
PROJECT # : DADETEST_LMI-1
PHASE :
DRAWN BY : BBR
REVIEWED BY :
DATE : 03/05/12

PROJECT NAME : LARGE MISSLE IMPACT TEST
SKYLIGHTS FOR DADE COUNTY, FL

ACRALIGHT SOLAR
CALIFORNIA OFFICE: 17752 MITCHELL N. SUITE H, IRVINE, CA. 92614

PAGE : 3
OF : 28

Leon Murray 207-651-3064
1172 Lebanon Road, North Berwick, ME 03906
Florida License No: 57110

May 28, 2014

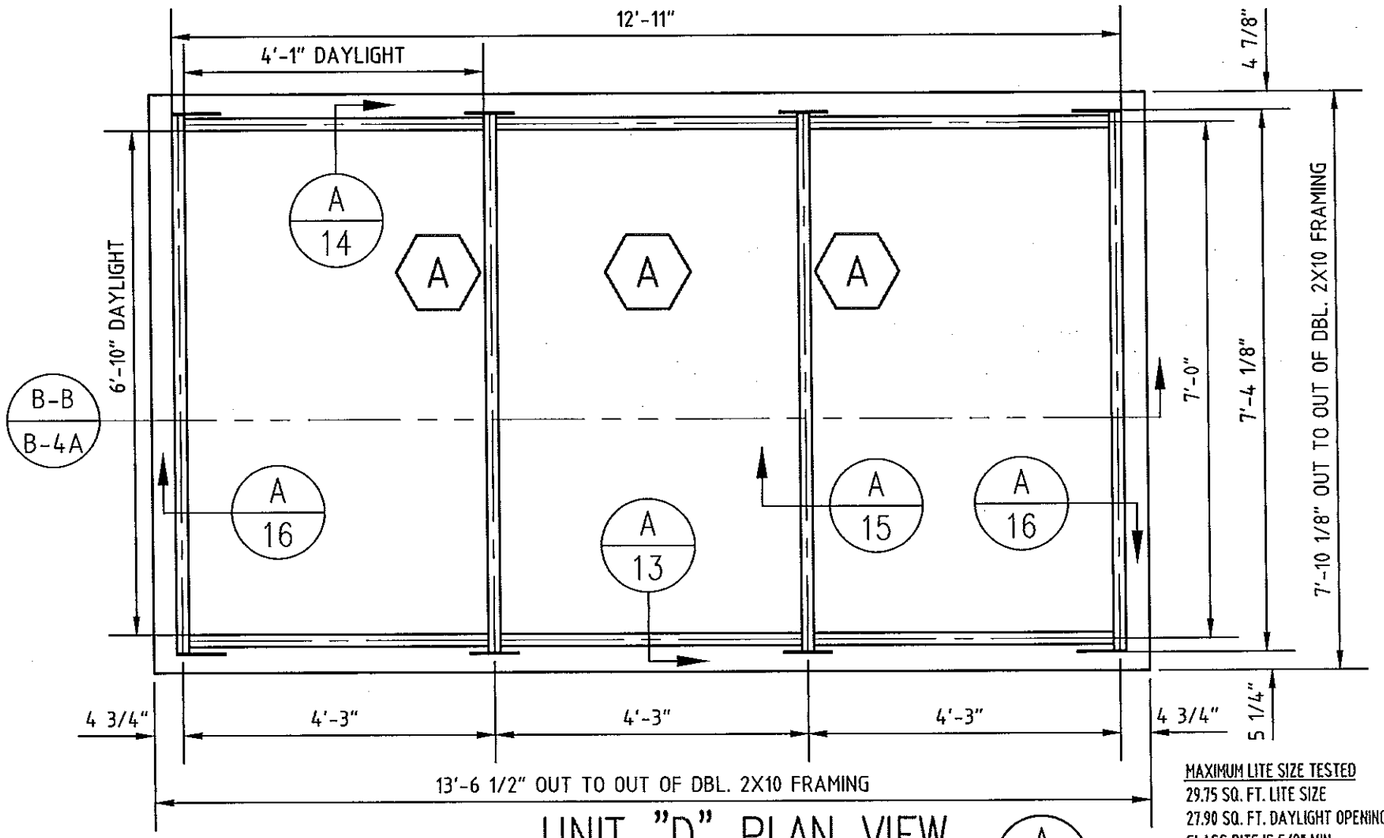

UNIT "D" PLAN VIEW (A / 4A)

SCALE : 1/2" = 1'-0"

MAXIMUM LITE SIZE TESTED
29.75 SQ. FT. LITE SIZE
27.90 SQ. FT. DAYLIGHT OPENING
GLASS BITE IS 5/8" MIN.
WEATHERSTRIPPING : NONE USED

INSULATING GLAZING UNIT (LAMINATE)

1 UNIT WITH IG GLAZING "A"
SEE PAGE 17 FOR FASTENER SIZES

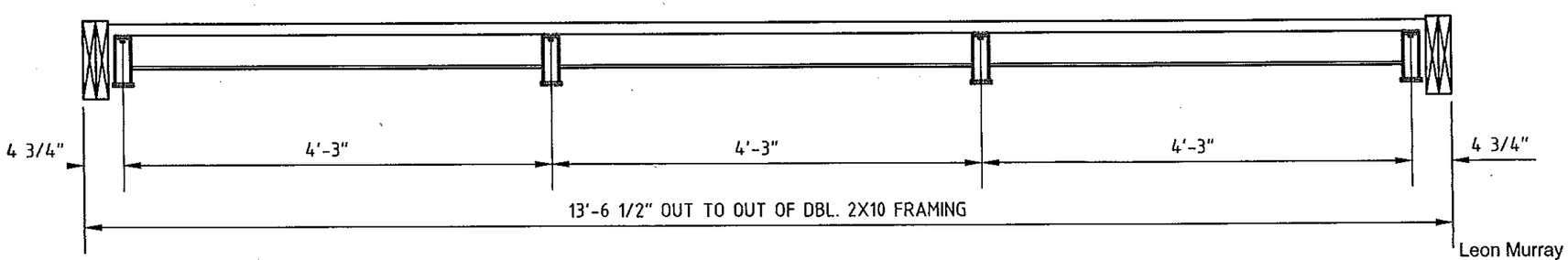

FULL SECTION "B-B" (B / 4A)

SCALE : 3/4" = 1'-0"

Leon Murray 207-651-3064
1172 Lebanon Road
North Berwick, ME 03906
Florida License No: 57110
May 28, 2014

DADE COUNTY USE

PRODUCT REVISED
as complying with the Florida
Building Code
Acceptance No 14-0102.06
Expiration Date 11/15/2017
By
Miami Dade Product Control

ENGINEER STAMP

LEON MURRAY
LICENSE
No 57110
STATE OF
FLORIDA
PROFESSIONAL ENGINEER

CUSTOMER PHONE :
PROJECT # : DADETEST_LMI-1
PHASE :
DRAWN BY : BBR
REVIEWED BY :
DATE : 03/05/12

PROJECT NAME : LARGE MISSLE IMPACT TEST
SKYLIGHTS FOR DADE COUNTY, FL

ACRALIGHT SOLAR
CALIFORNIA OFFICE: 17752 MITCHELL N. SUITE H, IRVINE, CA. 92614

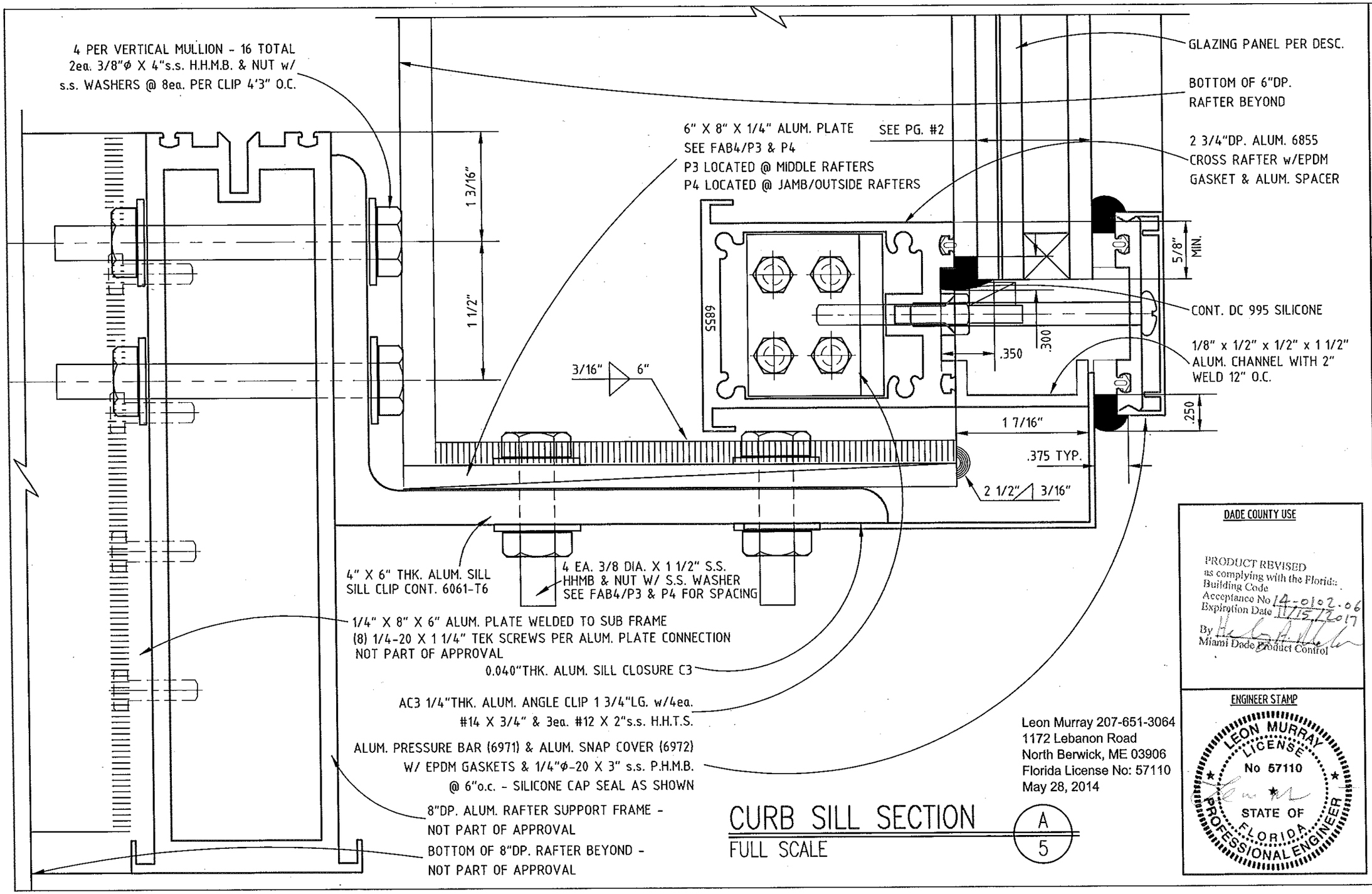

CURB SILL SECTION

FULL SCALE

A / 5

Leon Murray 207-651-3064
1172 Lebanon Road
North Berwick, ME 03906
Florida License No: 57110
May 28, 2014

DADE COUNTY USE

PRODUCT REVISED
as complying with the Florida
Building Code
Acceptance No 14-0102.06
Expiration Date 11/15/2017
By
Miami Dade Product Control

ENGINEER STAMP

LEON MURRAY
LICENSE
No 57110
STATE OF
FLORIDA
PROFESSIONAL ENGINEER

CUSTOMER PHONE :
PROJECT # : DADETEST_LMI-1
PHASE :
DATE : 03/05/12
DRAWN BY : BBR
REVIEWED BY :
PROJECT NAME : LARGE MISSLE IMPACT TEST SKYLIGHTS FOR DADE COUNTY, FL

ACRALIGHT SOLAR
CALIFORNIA OFFICE: 17752 MITCHELL N. SUITE H, IRVINE, CA. 92614

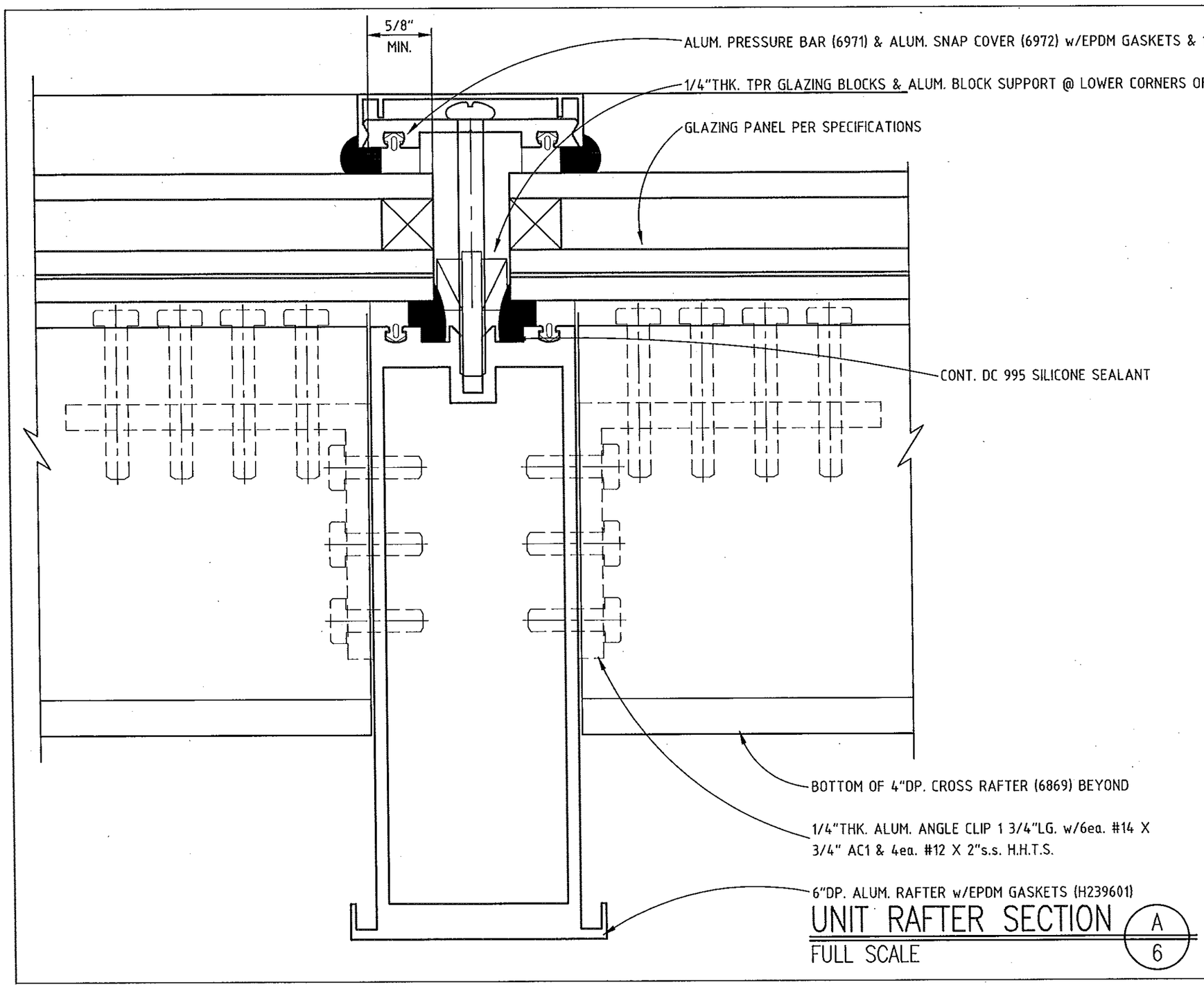

UNIT RAFTER SECTION (A / 6)

FULL SCALE

DADE COUNTY USE

PRODUCT REVISED
as complying with the Florida
Building Code
Acceptance No 14-0102.06
Expiration Date 11/15/2017
By
Miami Dade Product Control

ENGINEER STAMP

LEON MURRAY
LICENSE
No 57110
STATE OF
FLORIDA
PROFESSIONAL ENGINEER

CUSTOMER PHONE :

PROJECT # : DADETEST_LMI-1

PHASE :

DRAWN BY : BBR

REVIEWED BY :

DATE : 03/05/12

PROJECT NAME : LARGE MISSLE IMPACT TEST
SKYLIGHTS FOR DADE COUNTY, FL

ACRALIGHT SOLAR

CALIFORNIA OFFICE: 17752 MITCHELL N. SUITE H, IRVINE, CA. 92614

PAGE : 6 OF : 28

Leon Murray 207-651-3064 May 28, 2014
1172 Lebanon Road, North Berwick, ME 03906
Florida License No: 57110

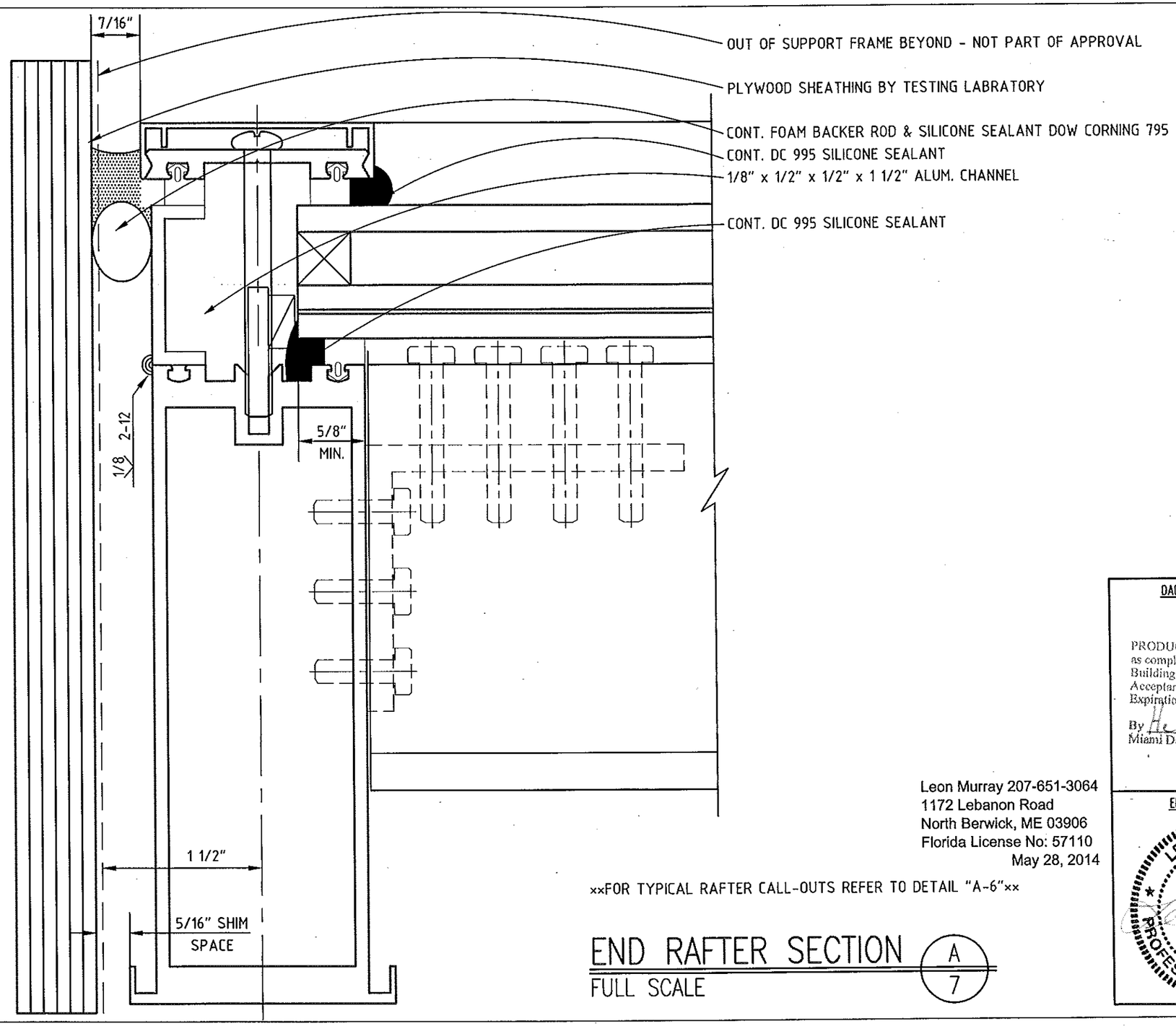

Leon Murray 207-651-3064
1172 Lebanon Road
North Berwick, ME 03906
Florida License No: 57110
May 28, 2014

xxFOR TYPICAL RAFTER CALL-OUTS REFER TO DETAIL "A-6"xx

END RAFTER SECTION (A / 7)

FULL SCALE

DADE COUNTY USE

PRODUCT REVISED
as complying with the Florida Building Code
Acceptance No 14-0102.06
Expiration Date 11/15/2017
By
Miami Dade Product Control

ENGINEER STAMP

LEON MURRAY
LICENSE
No 57110
STATE OF
FLORIDA
PROFESSIONAL ENGINEER

CUSTOMER PHONE :
PROJECT # : DADETEST_LMI-1
PHASE :
DRAWN BY : BBR
REVIEWED BY :
DATE : 03/05/12
PROJECT NAME : LARGE MISSLE IMPACT TEST SKYLIGHTS FOR DADE COUNTY, FL

ACRALIGHT SOLAR
CALIFORNIA OFFICE: 17752 MITCHELL N. SUITE H, IRVINE, CA. 92614

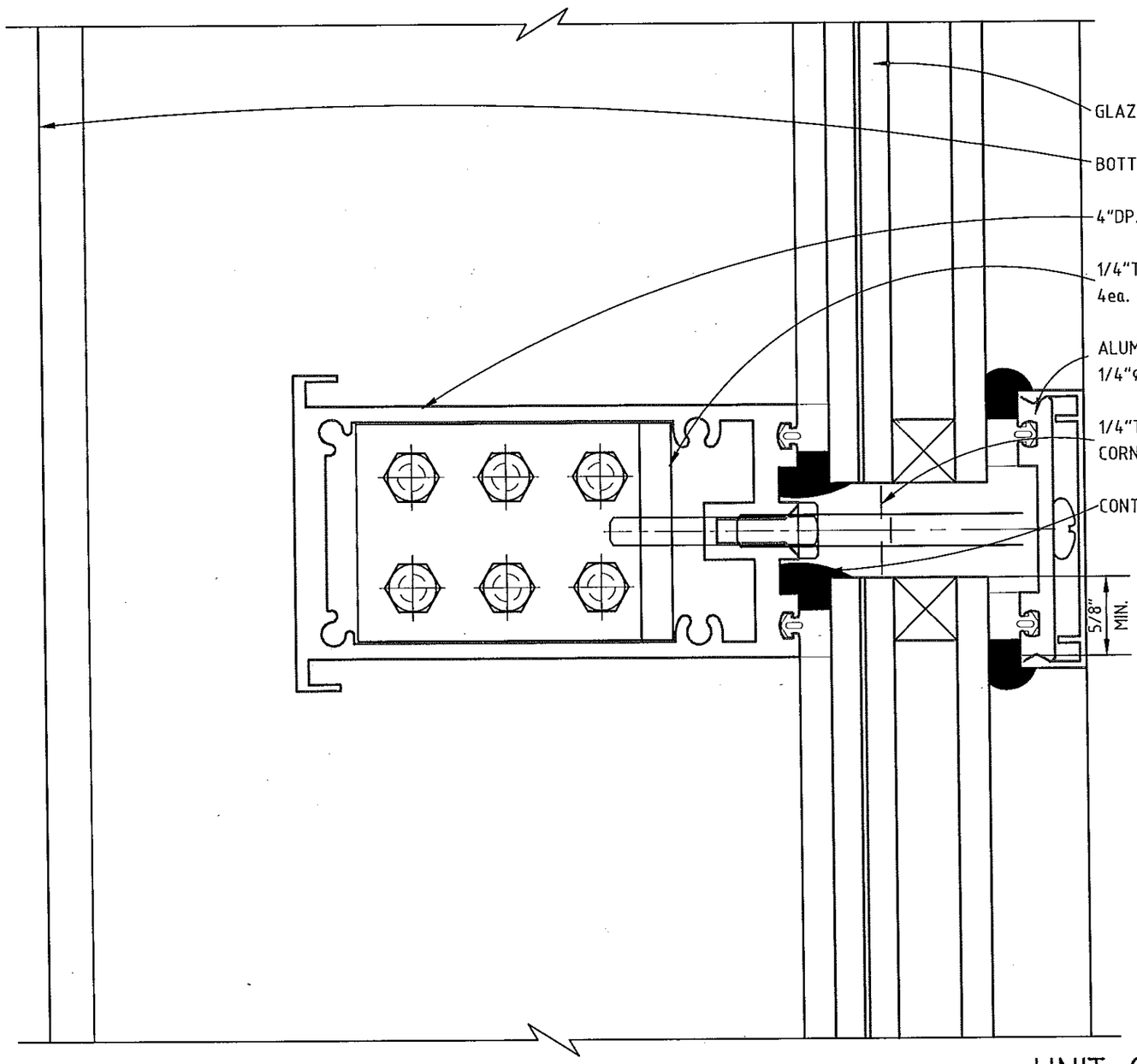

UNIT CROSS RAFTER

FULL SCALE

A / 8

Leon Murray 207-651-3064
1172 Lebanon Road
North Berwick, ME 03906
Florida License No: 57110
May 28, 2014

DADE COUNTY USE

PRODUCT REVISED
as complying with the Florida
Building Code
Acceptance No 14-0102.06
Expiration Date 11/15/2017
By
Miami Dade Product Control

ENGINEER STAMP

LEON MURRAY
LICENSE
No 57110
STATE OF
FLORIDA
PROFESSIONAL ENGINEER

CUSTOMER PHONE :
PROJECT # : DADETEST_LMI-1
PHASE :
DRAWN BY : BBR
REVIEWED BY :
DATE : 03/05/12
PROJECT NAME : LARGE MISSLE IMPACT TEST
SKYLIGHTS FOR DADE COUNTY, FL

ACRALIGHT SOLAR
CALIFORNIA OFFICE: 17752 MITCHELL N. SUITE H, IRVINE, CA. 92614

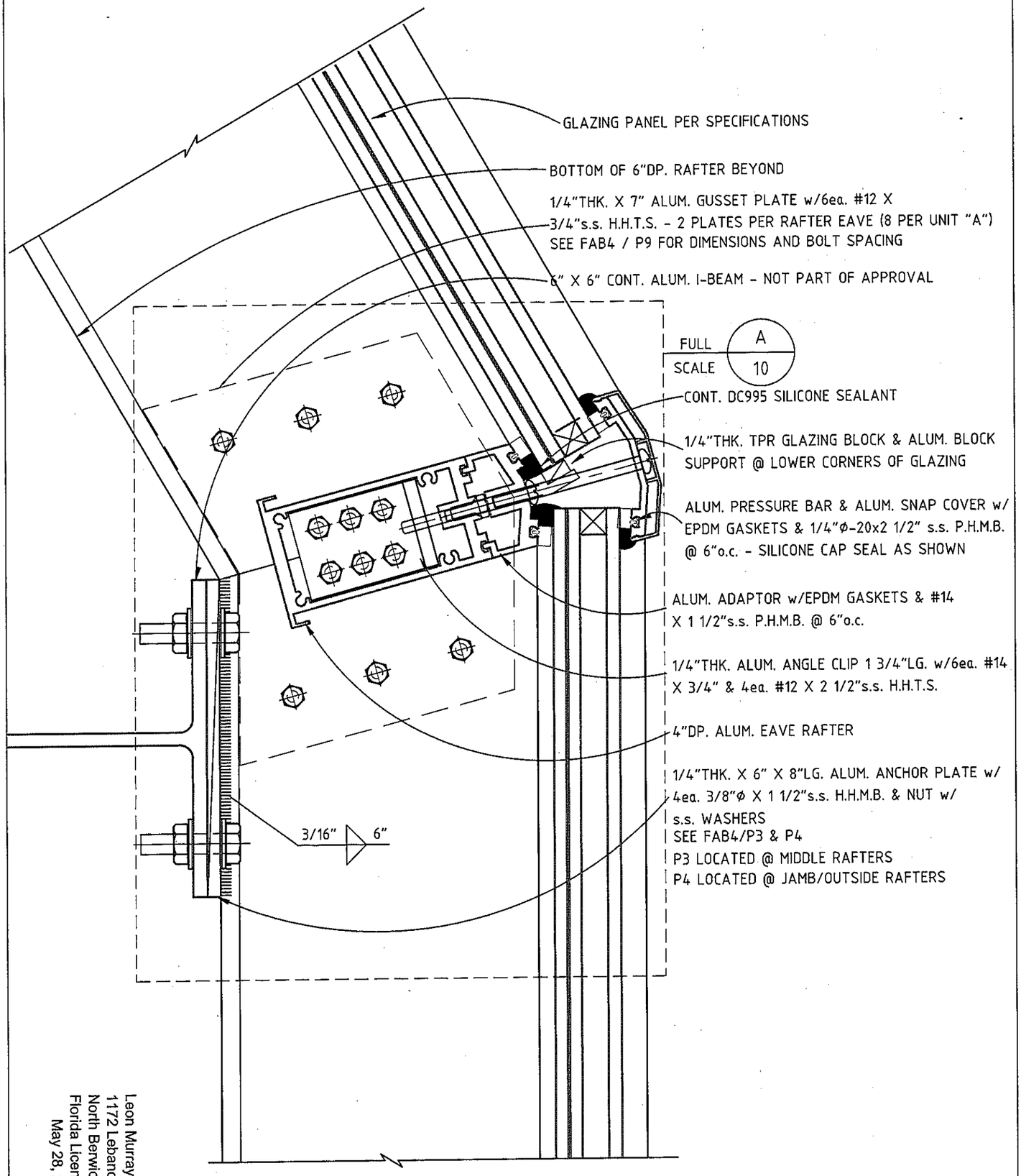

Leon Murray 207-651-3064
1172 Lebanon Road
North Berwick, ME 03906
Florida License No: 57110
May 28, 2014

EAVE SECT.-OVERALL

HALF SCALE

A / 9

ENGINEER STAMP

LEON MURRAY LICENSE No 57110 STATE OF FLORIDA PROFESSIONAL ENGINEER

DADE COUNTY USE

PRODUCT REVISED as complying with the Florida Building Code
Acceptance No. 14-0102.06
Expiration Date 11/15/2017
By Miami Dade Product Control

PAGE : 9 OF : 28	ACRALIGHT SOLAR CALIFORNIA OFFICE: 17752 MITCHELL N. SUITE H, IRVINE, CA. 92614	PROJECT NAME : LARGE MISSLE IMPACT TEST SKYLIGHTS FOR DADE COUNTY, FL	CUSTOMER PHONE : PROJECT # : DADETEST_LMI-1 — PHASE : DRAWN BY : BBR — REVIEWED BY : — DATE : 03/05/12

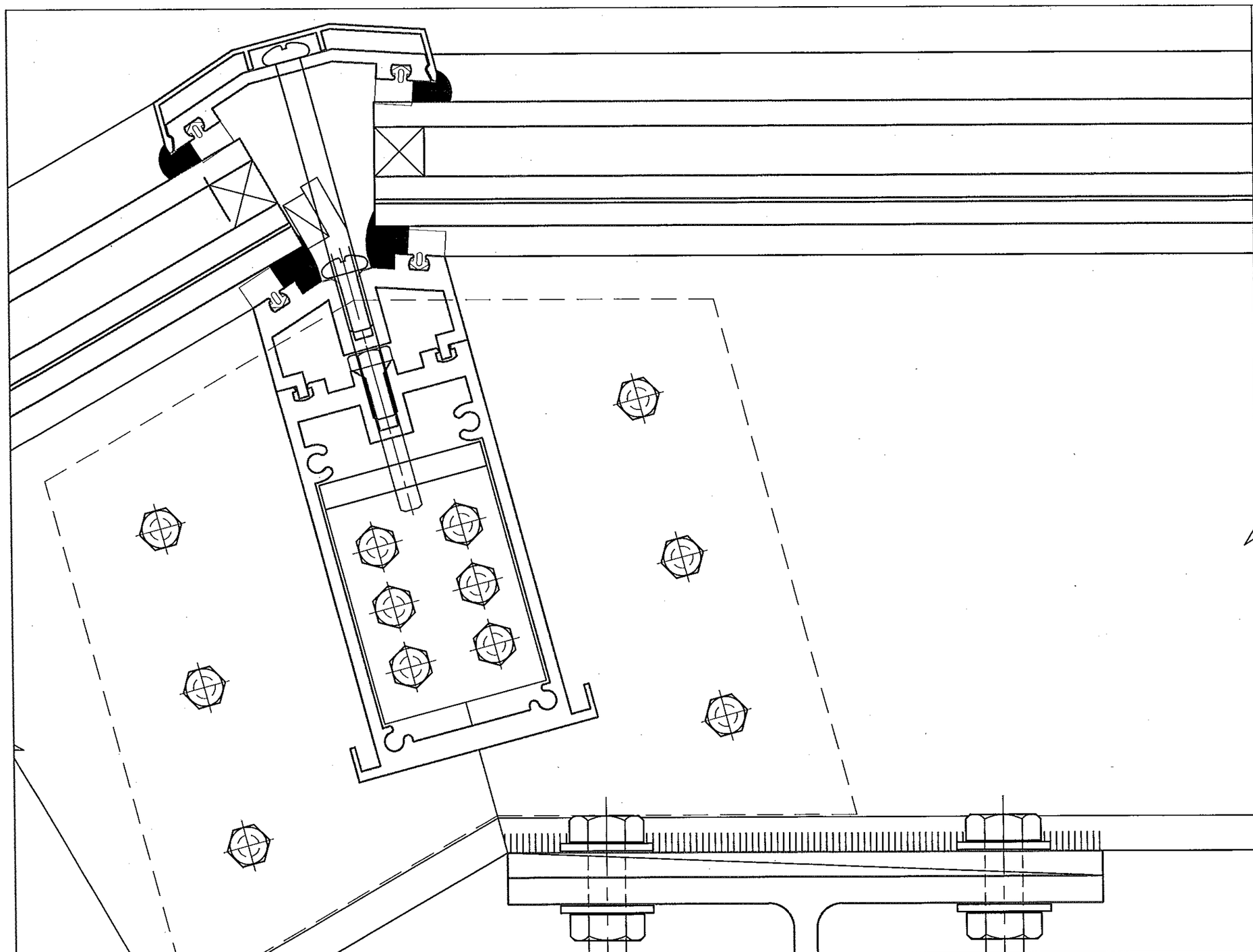

EAVE SECT.-CLOSE UP (A / 10)

FULL SCALE

DADE COUNTY USE

PRODUCT REVISED
as complying with the Florida
Building Code
Acceptance No 14-0102.06
Expiration Date 11/15/2017
By
Miami Dade Product Control

ENGINEER STAMP

LEON MURRAY
LICENSE
No 57110
STATE OF
FLORIDA
PROFESSIONAL ENGINEER

PROJECT NAME : LARGE MISSLE IMPACT TEST
SKYLIGHTS FOR DADE COUNTY, FL

CUSTOMER PHONE :
PROJECT # : DADETEST_LMI-1
PHASE :
DRAWN BY : BBR
REVIEWED BY :
DATE : 03/05/12

ACRALIGHT SOLAR
CALIFORNIA OFFICE: 17752 MITCHELL N. SUITE H, IRVINE, CA. 92614

PAGE : 10
OF : 28

Leon Murray 207-651-3064 May 28, 2014
1172 Lebanon Road, North Berwick, ME 03906
Florida License No: 57110

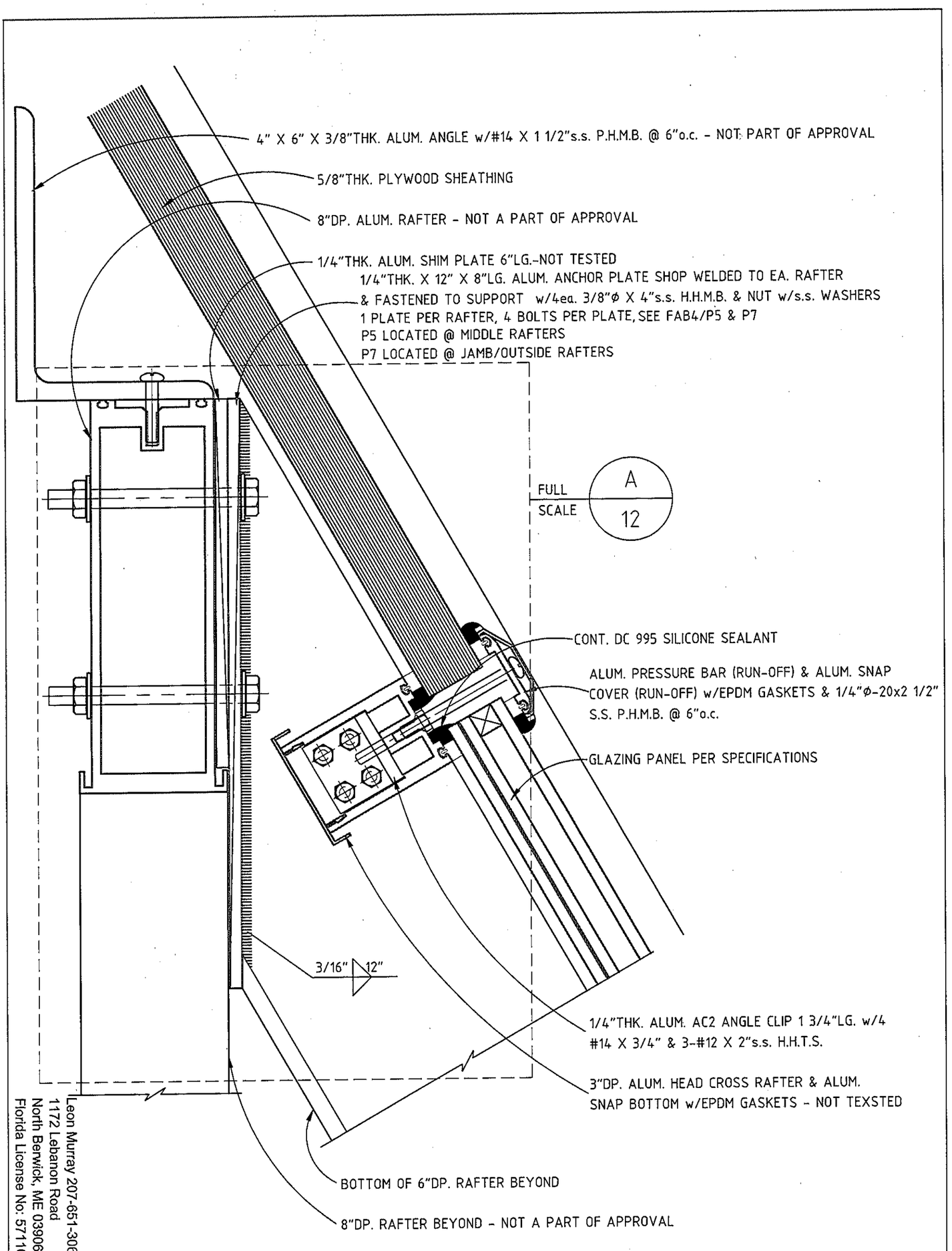

Leon Murray 207-651-3064
1172 Lebanon Road
North Berwick, ME 03906
Florida License No: 57110

May 28, 2014

ENGINEER STAMP

STATE OF FLORIDA
PROFESSIONAL ENGINEER
LEON MURRAY
LICENSE
No 57110

DADE COUNTY USE

PRODUCT REVISED
as complying with the Florida
Building Code
Acceptance No 14-0102.06
Expiration Date 11/15/2017
By
Miami Dade Product Control

HEAD SECTION-OVERALL

HALF SCALE

A
11

PAGE : 11 OF : 28	ACRALIGHT SOLAR CALIFORNIA OFFICE: 17752 MITCHELL N. SUITE H, IRVINE, CA. 92614	PROJECT NAME : LARGE MISSLE IMPACT TEST SKYLIGHTS FOR DADE COUNTY, FL	CUSTOMER PHONE : PROJECT # : DADETEST_LMI-1 — PHASE : DRAWN BY : BBR — REVIEWED BY : — DATE : 03/05/12

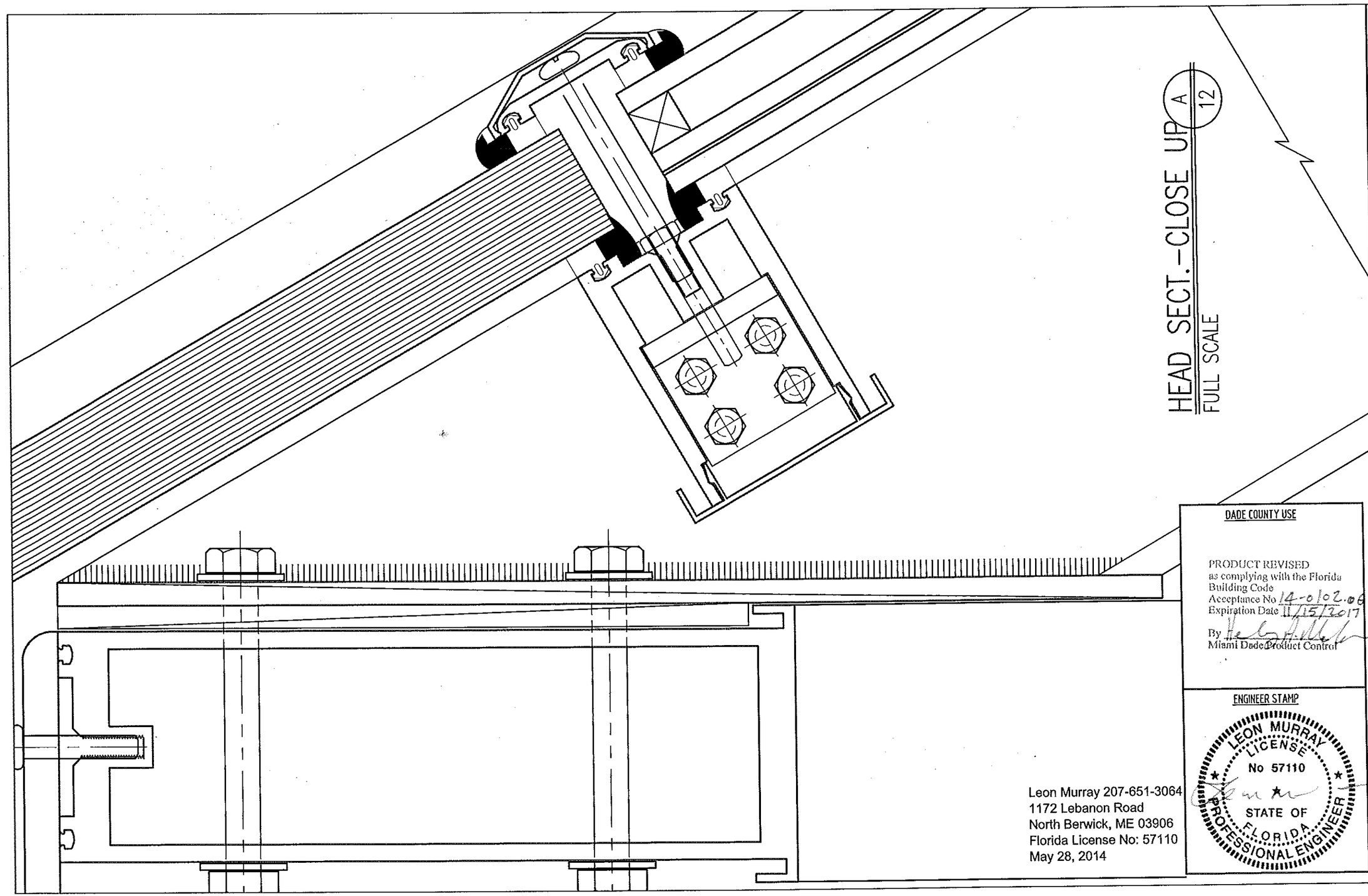

HEAD SECT.-CLOSE UP (A / 12)

FULL SCALE

DADE COUNTY USE

PRODUCT REVISED
as complying with the Florida
Building Code
Acceptance No 14-0102.08
Expiration Date 11/15/2017
By
Miami Dade Product Control

ENGINEER STAMP

LEON MURRAY
LICENSE
No 57110
STATE OF
FLORIDA
PROFESSIONAL ENGINEER

Leon Murray 207-651-3064
1172 Lebanon Road
North Berwick, ME 03906
Florida License No: 57110
May 28, 2014

CUSTOMER PHONE :	
PROJECT # : DADETEST_LMI-1	PHASE :
DRAWN BY : BBR	REVIEWED BY :
	DATE : 03/05/12

PROJECT NAME : LARGE MISSLE IMPACT TEST
SKYLIGHTS FOR DADE COUNTY, FL

ACRALIGHT SOLAR
CALIFORNIA OFFICE: 17752 MITCHELL N. SUITE H, IRVINE, CA. 92614

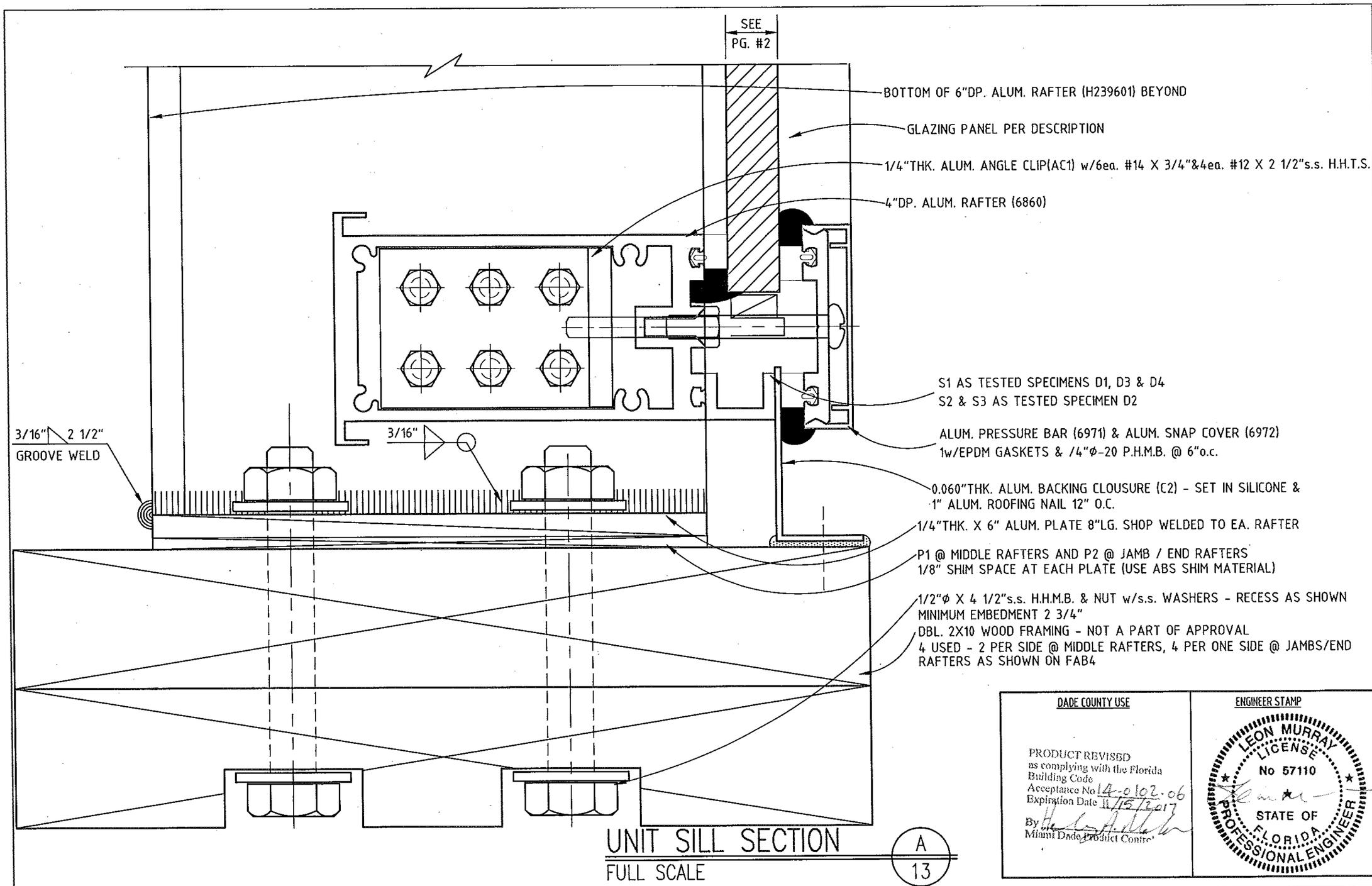

UNIT SILL SECTION

FULL SCALE

A
13

DADE COUNTY USE

PRODUCT REVISED
as complying with the Florida
Building Code
Acceptance No 14-0102.06
Expiration Date 11/15/2017
By
Miami Dade Product Control

ENGINEER STAMP

LEON MURRAY
LICENSE
No 57110
STATE OF
FLORIDA
PROFESSIONAL ENGINEER

PROJECT NAME : LARGE MISSLE IMPACT TEST
SKYLIGHTS FOR DADE COUNTY, FL

CUSTOMER PHONE :

PROJECT # : DADETEST_LMI-1

PHASE :

DRAWN BY : BBR

REVIEWED BY :

DATE : 03/05/12

ACRALIGHT SOLAR

CALIFORNIA OFFICE: 17752 MITCHELL N. SUITE H, IRVINE, CA. 92614

PAGE : 13

OF : 28

Leon Murray 207-651-3064 May 28, 2014
1172 Lebanon Road, North Berwick, ME 03906
Florida License No: 57110

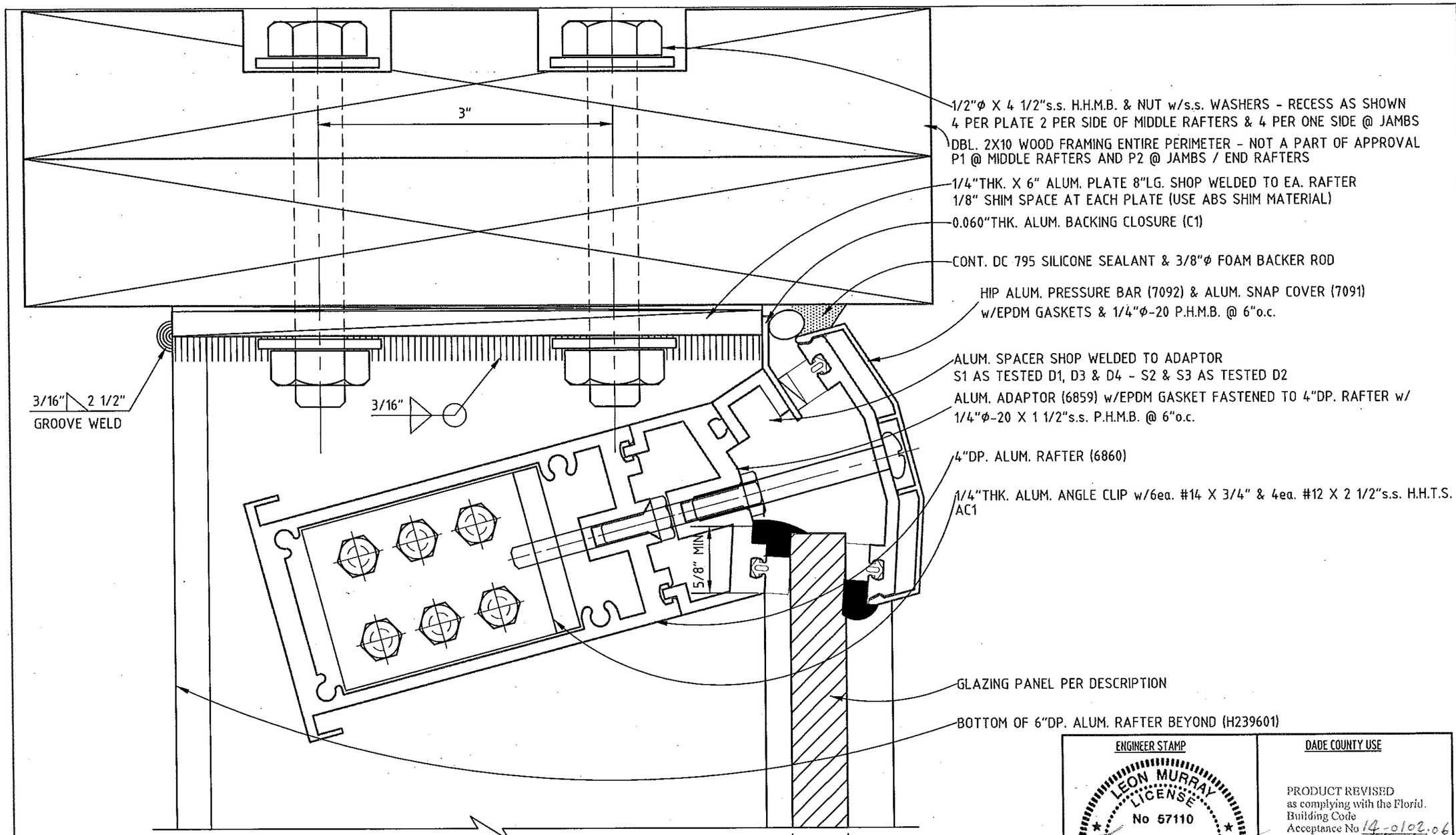

HEAD SECTION DETAIL (A / 14)

FULL SCALE

Leon Murray 207-651-3064
1172 Lebanon Road
North Berwick, ME 03906
Florida License No: 57110
May 28, 2014

ENGINEER STAMP

LEON MURRAY LICENSE No 57110 STATE OF FLORIDA PROFESSIONAL ENGINEER

DADE COUNTY USE

PRODUCT REVISED
as complying with the Florid.
Building Code
Acceptance No 14-0102.06
Expiration Date 11/15/2017
By
Miami Dade Product Control

CUSTOMER PHONE :
PROJECT # : DADETEST_LMI-1
PHASE :
DRAWN BY : BBR
REVIEWED BY :
DATE : 03/05/12

PROJECT NAME : LARGE MISSLE IMPACT TEST
SKYLIGHTS FOR DADE COUNTY, FL

ACRALIGHT SOLAR
CALIFORNIA OFFICE: 17752 MITCHELL N. SUITE H, IRVINE, CA. 92614

PAGE : 14
OF : 28

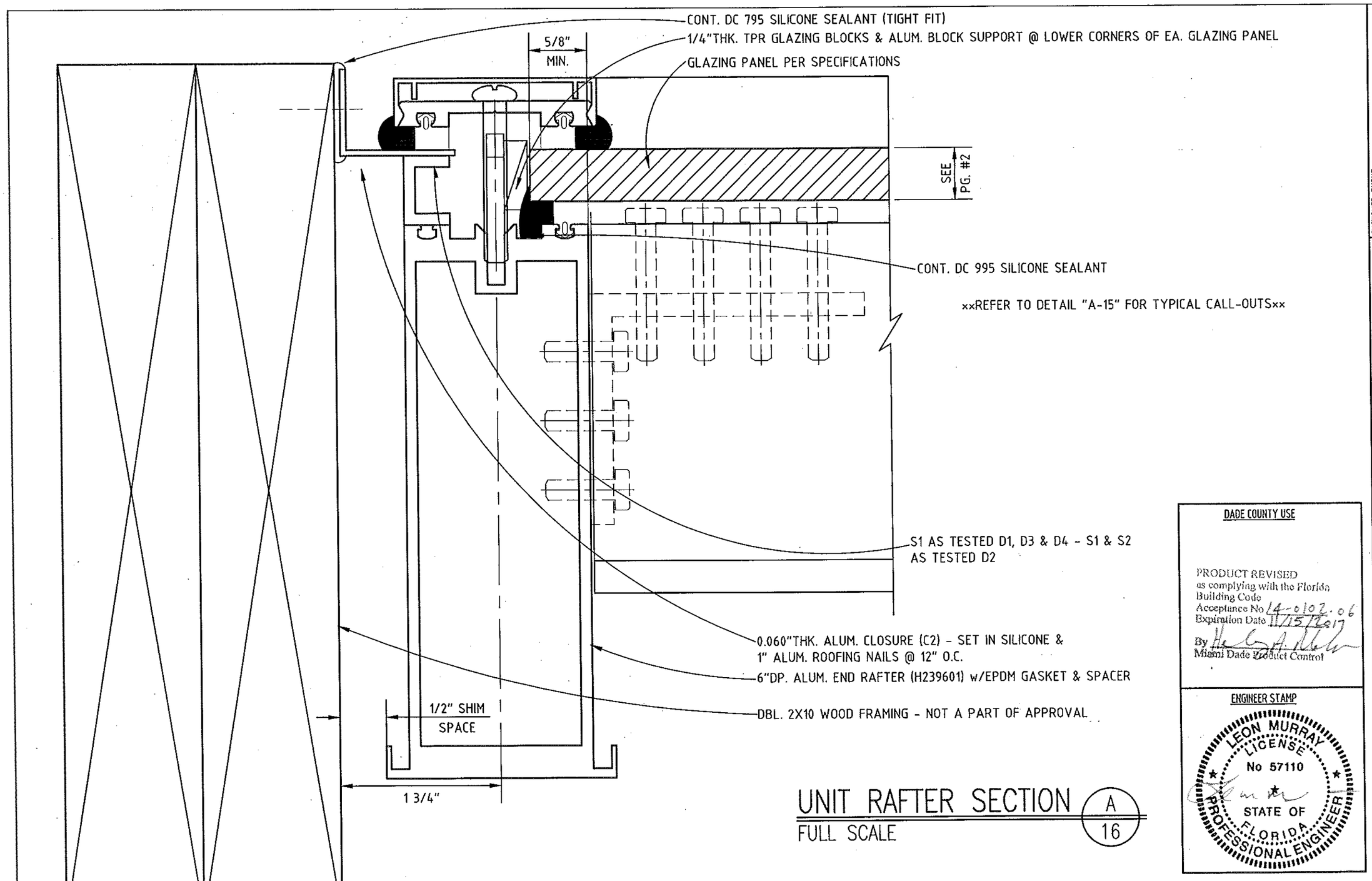

UNIT RAFTER SECTION (A / 16)

FULL SCALE

DADE COUNTY USE

PRODUCT REVISED
as complying with the Florida Building Code
Acceptance No 14-0102.06
Expiration Date 11/15/2017
By
Miami Dade Product Control

ENGINEER STAMP

LEON MURRAY
LICENSE
No 57110
STATE OF FLORIDA
PROFESSIONAL ENGINEER

CUSTOMER PHONE :
PROJECT # : DADETEST_LMI-1
PHASE :
DRAWN BY : BBR
REVIEWED BY :
DATE : 03/05/12
PROJECT NAME : LARGE MISSLE IMPACT TEST SKYLIGHTS FOR DADE COUNTY, FL

ACRALIGHT SOLAR
CALIFORNIA OFFICE: 17752 MITCHELL N. SUITE H, IRVINE, CA. 92614

PAGE : 16 OF : 28

Leon Murray 207-651-3064 May 28, 2014
1172 Lebanon Road, North Berwick, ME 03906
Florida License No: 57110

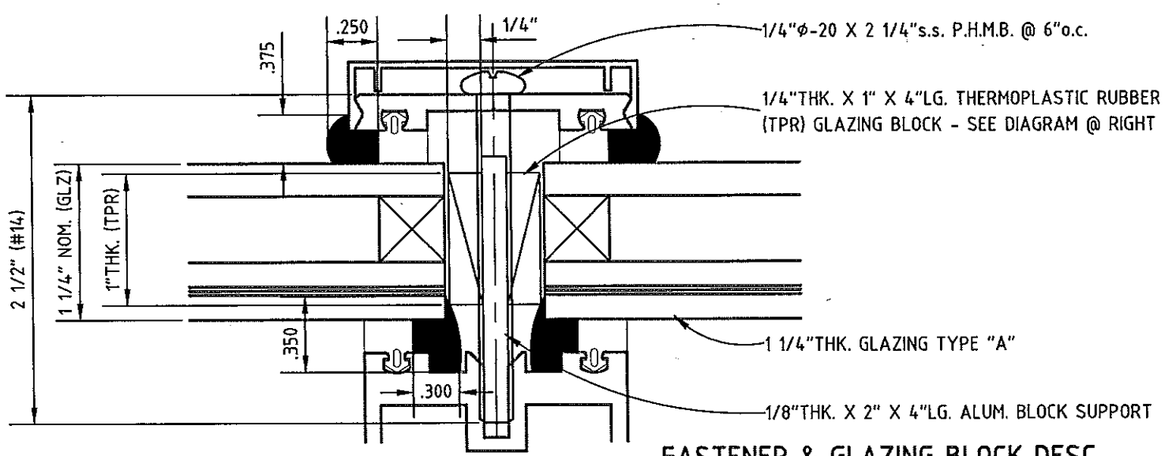

FASTENER & GLAZING BLOCK DESC.

AT GLAZING TYPE "A"

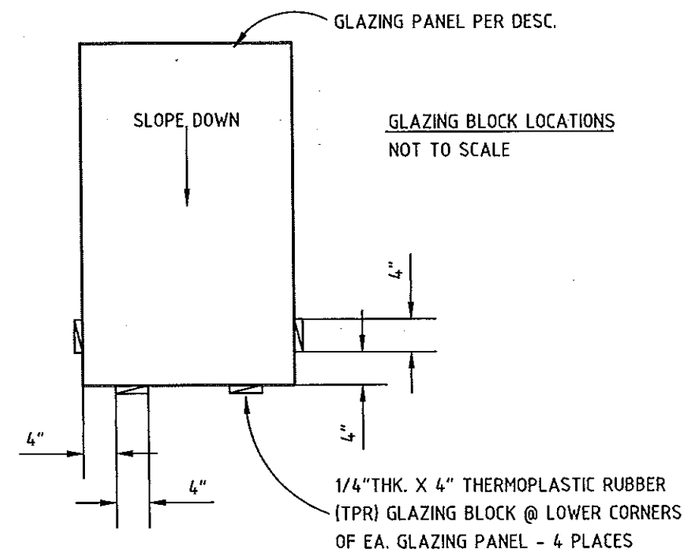

GLAZING BLOCK LOCATIONS

GLAZING BLOCK LOCATIONS
NOT TO SCALE

TYPICAL GLAZING PROCEDURES ABOVE

EXCEPTIONS:
3" LONG BOLT @ A1 SILL
2 1/2" LONG BOLT @ HIP/RIDGE PRESSURE BAR LOCATIONS (7092)

DADE COUNTY USE

PRODUCT REVISED
as complying with the Florida Building Code
Acceptance No 14-0102.06
Expiration Date 11/15/2017
By
Miami Dade Product Control

ENGINEER STAMP

LEON MURRAY
LICENSE
No 57110
STATE OF
FLORIDA
PROFESSIONAL ENGINEER

Leon Murray 207-651-3064
1172 Lebanon Road
North Berwick, ME 03906
Florida License No: 57110
May 28, 2014

CUSTOMER PHONE :
PROJECT # : DADETEST_LMI-1
PHASE :
DRAWN BY : BBR
REVIEWED BY :
DATE : 03/05/12
PROJECT NAME : LARGE MISSLE IMPACT TEST SKYLIGHTS FOR DADE COUNTY, FL

ACRALIGHT SOLAR
CALIFORNIA OFFICE: 17752 MITCHELL N. SUITE H, IRVINE, CA. 92614

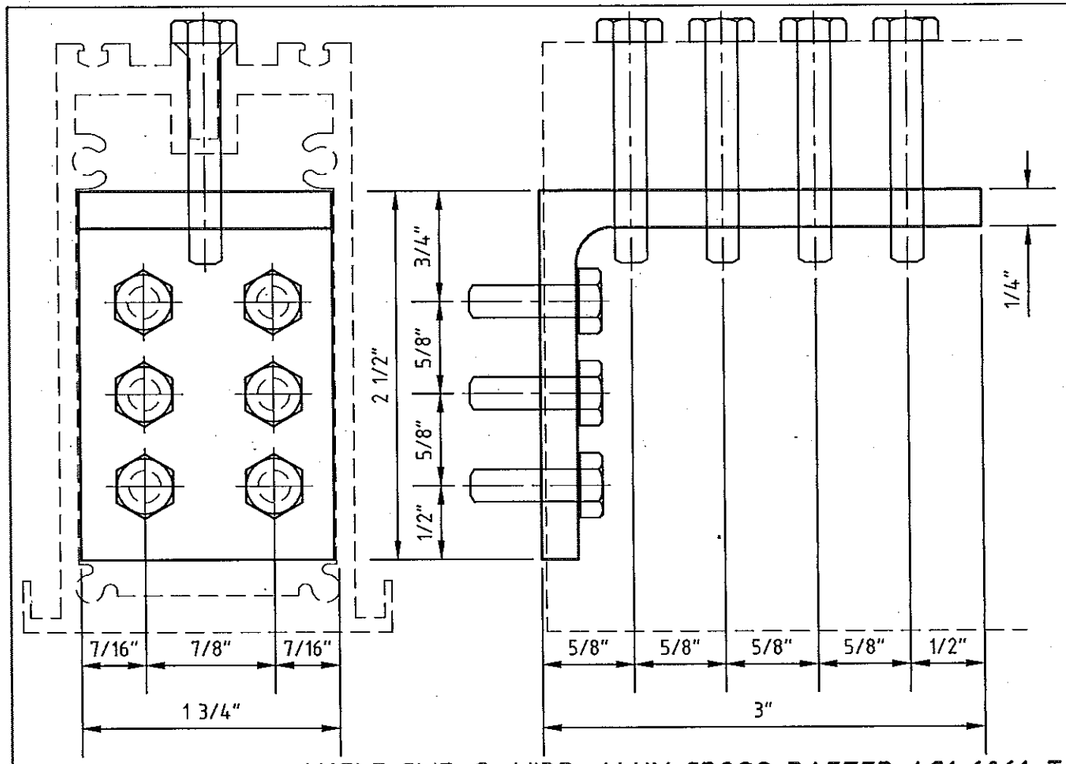

ANGLE CLIP @ 4"DP. ALUM CROSS RAFTER AC1 6061-T6

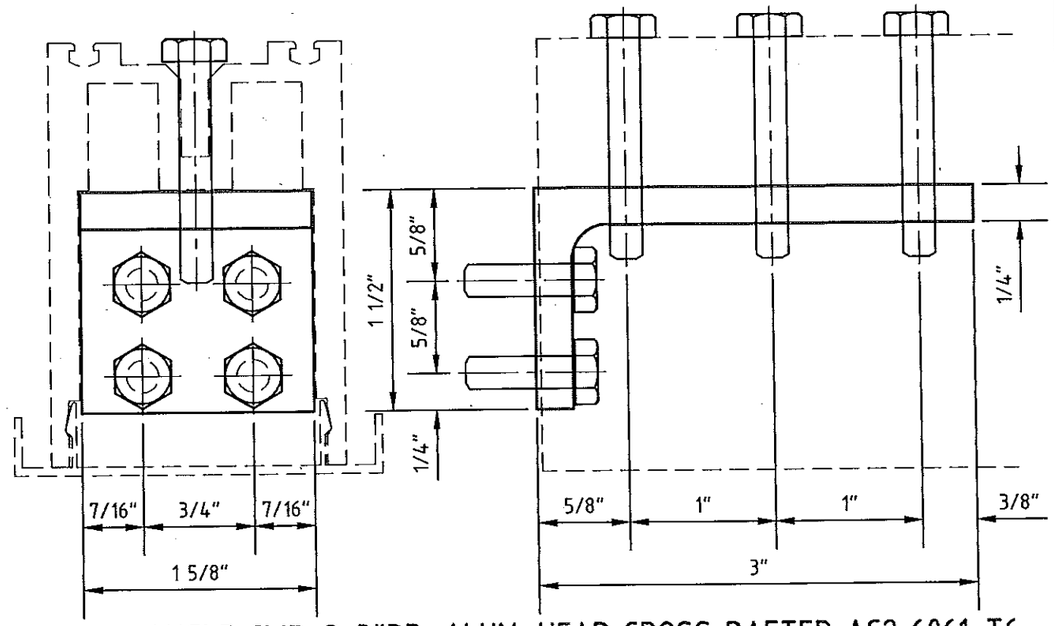

ANGLE CLIP @ 3"DP. ALUM. HEAD CROSS RAFTER AC2 6061-T6

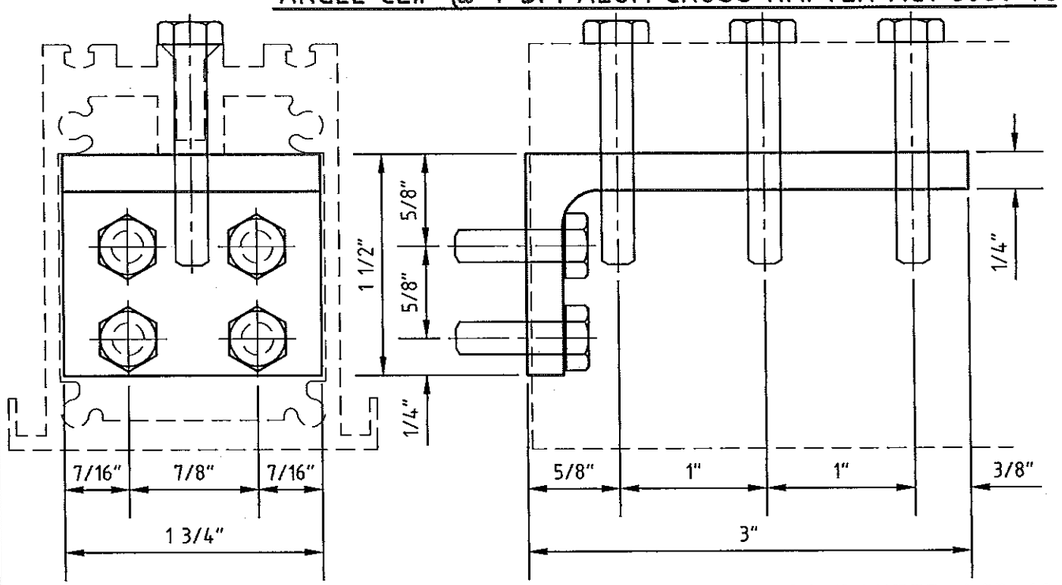

ANGLE CLIP @ 2 3/4"DP. ALUM. CROSS RAFTER AC3 6061-T6

DADE COUNTY USE

PRODUCT REVISED
as complying with the Florida
Building Code
Acceptance No 14-0102.06
Expiration Date 11/15/2017
By
Miami Dade Product Control

ENGINEER STAMP

LEON MURRAY
LICENSE
No 57110
STATE OF
FLORIDA
PROFESSIONAL ENGINEER

Leon Murray 207-651-3064
1172 Lebanon Road
North Berwick, ME 03906
Florida License No: 57110
May 28, 2014

PROJECT NAME : LARGE MISSLE IMPACT TEST SKYLIGHTS FOR DADE COUNTY, FL

CUSTOMER PHONE :

PROJECT # : DADETEST_LMI-1

PHASE :

DRAWN BY : BBR

REVIEWED BY :

DATE : 03/05/12

ACRALIGHT SOLAR

CALIFORNIA OFFICE: 17752 MITCHELL N. SUITE H, IRVINE, CA. 92614

SECTION PROPERTIES (DIE 10415)

6"DP. ALUM. RAFTER 6063-T6

A = 2.913

Ix = 14.328

Iy = 1.711

Sx = 4.868

Sy = 1.369

R = 2.210

WT. PER FT. = 3.349lb.

CUST. ACRALIGHT

PART NAME: 6" RAFTER

PART NUMBER:

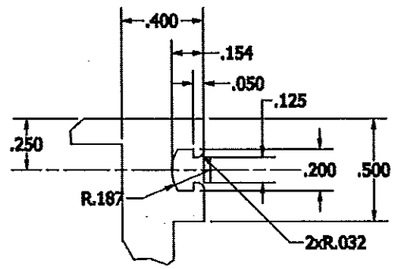

DETAIL A
SCALE 2 : 1
(2 PLCS)

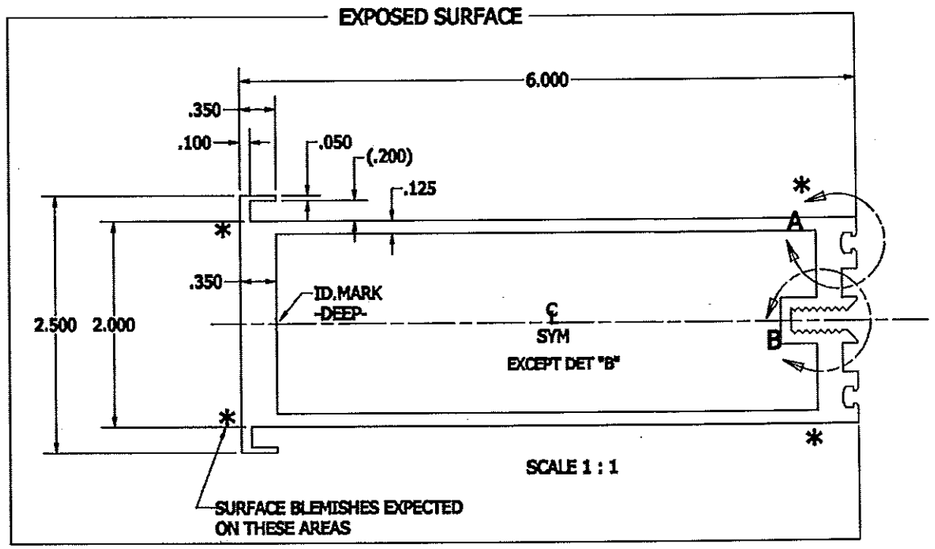

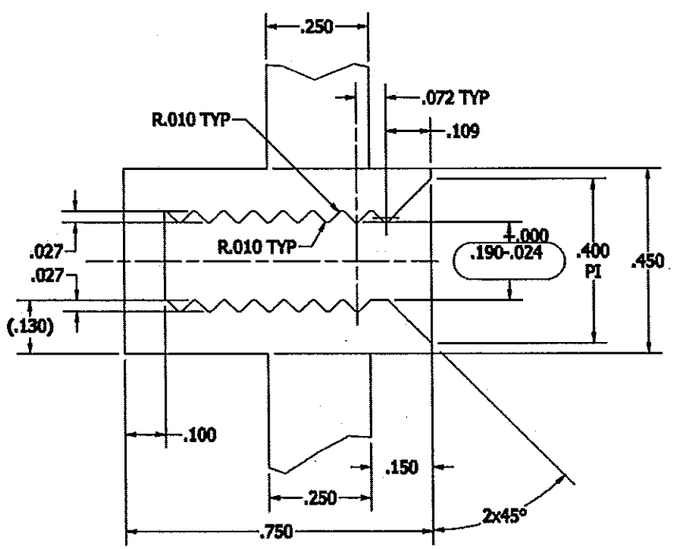

DETAIL B
SCALE 4 : 1

UNMARKED WALLS: NONE	UNMARKED CORNERS: R.010	UNMARKED FILLETS: R.010		
UNLESS OTHERWISE SPECIFIED, STANDARD ALUMINUM ASSOCIATION TOLERANCES APPLY • FRONTIER ID. MARK: TWO .010 R x .100 APART				
AREA 2.763	PRESS 4	DWN CD	Frontier Aluminum Corp.	
WT/FT 3.315	PORTS 13x7-1H	DATE 10.19.2009	2480 Railroad St.Corona, Ca	
PERI. 35.559	W/P HOLLOW	17006TNF	Ph:[951] 735-1770 Fax 735-1895	
FACTOR 11	BKR. HOLLOW	CLASS HOLLOW	http://www.frontier-aluminum.com	
C.C.D. 6.414	BOL.	20.859	DIE NO. 10415	REV. N/C
AW: 4213/94	ALLOY & TEMPER 6063-T5			

DADE COUNTY USE

PRODUCT REVISED
as complying with the Florida
Building Code
Acceptance No 14-0102.06
Expiration Date 11/15/2017
By
Miami Dade Product Control

ENGINEER STAMP

LEON MURRAY
LICENSE
No 57110
STATE OF
FLORIDA
PROFESSIONAL ENGINEER

CUSTOMER PHONE :

PROJECT # : DADETEST_LMI-1

PHASE :

DATE : 03/05/12

DRAWN BY : BBR

REVIEWED BY :

PROJECT NAME : LARGE MISSLE IMPACT TEST SKYLIGHTS FOR DADE COUNTY, FL

ACRALIGHT SOLAR

CALIFORNIA OFFICE: 17752 MITCHELL N. SUITE H, IRVINE, CA. 92614

PAGE : 19 OF : 28

Leon Murray 207-651-3064 May 28, 2014
1172 Lebanon Road, North Berwick, ME 03906
Florida License No: 57110

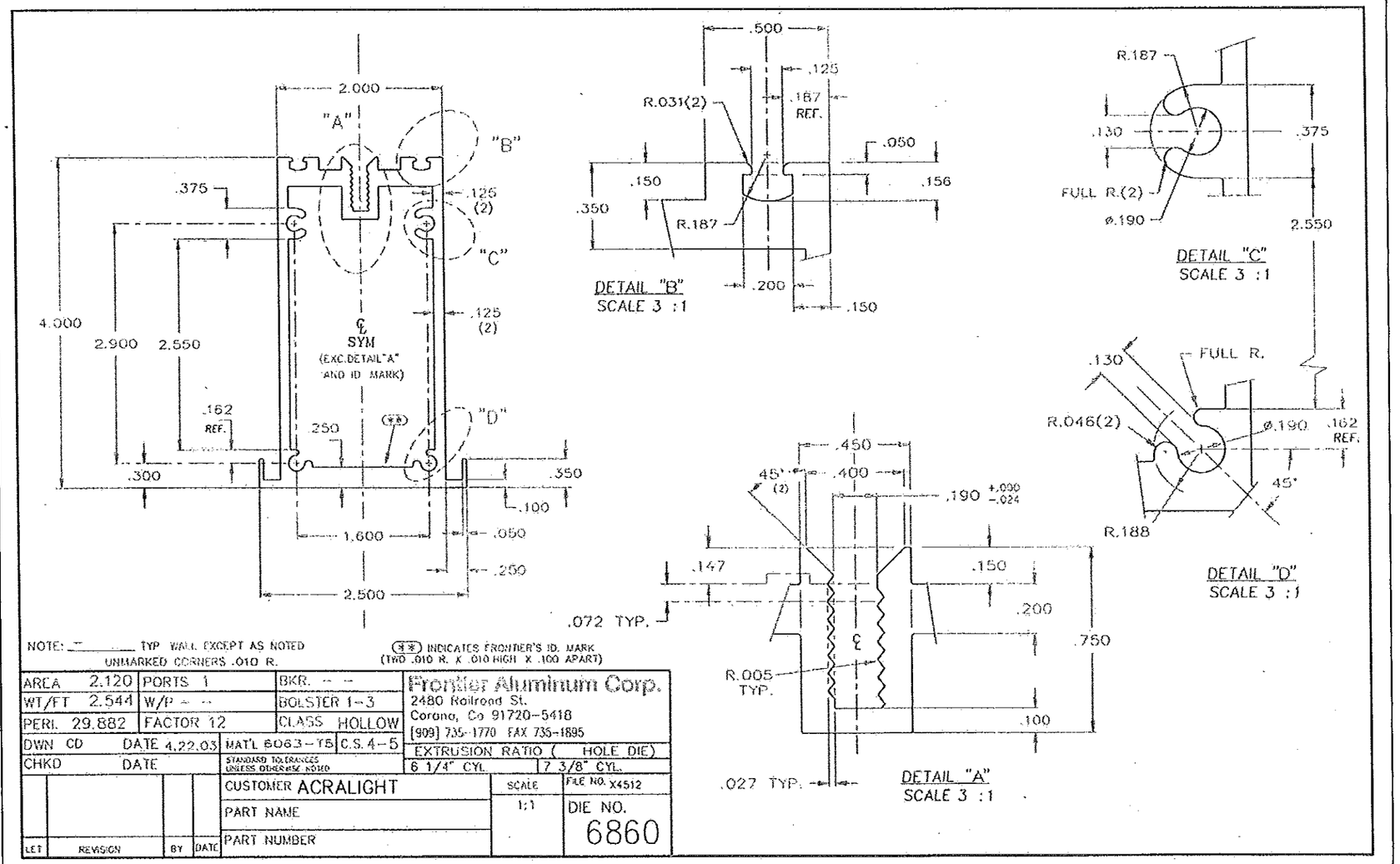

SECTION PROPERTIES (DIE 6860)

4"DP. ALUM. CROSS / EAVE RAFTER 6063-T6

A = 2.052
Ix = 4.316
Iy = 1.200
Sx = 2.233
Sy = 0.960
R = 1.450
WT. PER FT. = 2.544lb.

DADE COUNTY USE

PRODUCT REVISED
as complying with the Florida
Building Code
Acceptance No 14-0102.06
Expiration Date 11/15/2017
By
Miami Dade Product Control

ENGINEER STAMP

LEON MURRAY
LICENSE
No 57110
STATE OF
FLORIDA
PROFESSIONAL ENGINEER

CUSTOMER PHONE :
PROJECT # : DADETEST_LMI-1
PHASE :
DRAWN BY : BBR
REVIEWED BY :
DATE : 03/05/12

PROJECT NAME : LARGE MISSLE IMPACT TEST SKYLIGHTS FOR DADE COUNTY, FL

ACRALIGHT SOLAR
CALIFORNIA OFFICE: 17752 MITCHELL N. SUITE H, IRVINE, CA. 92614

Leon Murray 207-651-3064 May 28, 2014
1172 Lebanon Road, North Berwick, ME 03906
Florida License No: 57110

SECTION PROPERTIES (DIE 6855)

2 3/4"DP. ALUM. CROSS RAFTER 6063-T6

A = 1.600
Ix = 1.813
Iy = 0.845
Sx = 1.247
Sy = 0.676
R = 1.060
WT. PER FT. = 1.992lb.

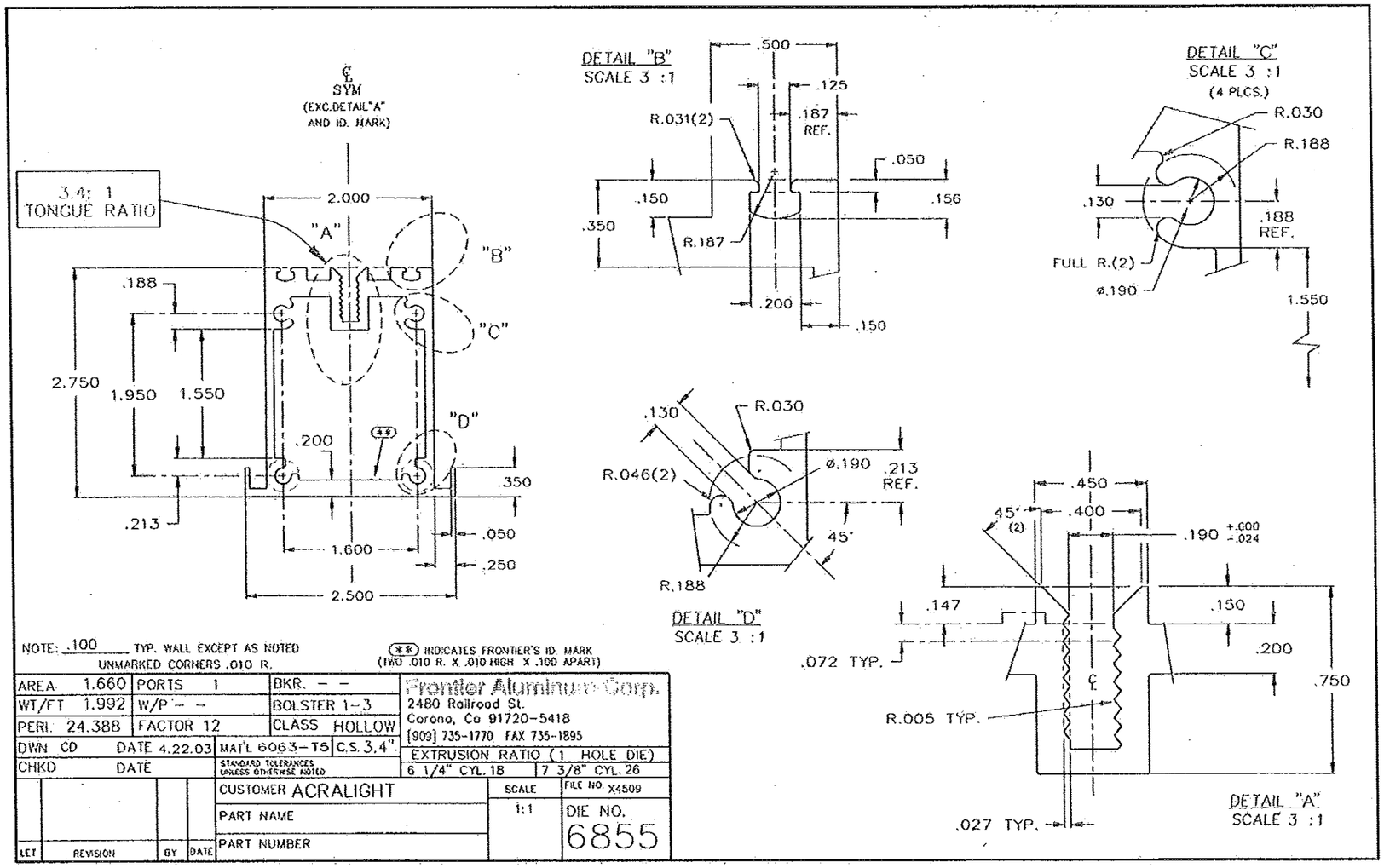

NOTE: .100 TYP. WALL EXCEPT AS NOTED
UNMARKED CORNERS .010 R.

(**) INDICATES FRONTIER'S ID MARK (TWO .010 R. X .010 HIGH X .100 APART)

AREA 1.660	PORTS 1	BKR. – –	
WT/FT 1.992	W/P – –	BOLSTER 1-3	
PERI. 24.388	FACTOR 12	CLASS HOLLOW	
DWN CD	DATE 4.22.03	MAT'L 6063-T5	C.S. 3.4"
CHKD	DATE	STANDARD TOLERANCES UNLESS OTHERWISE NOTED	

Frontier Aluminum Corp.
2480 Railroad St.
Corona, Ca 91720-5418
[909] 735-1770 FAX 735-1895

EXTRUSION RATIO (1 HOLE DIE)
6 1/4" CYL. 18 | 7 3/8" CYL. 26

LET	REVISION	BY	DATE

CUSTOMER ACRALIGHT
PART NAME
PART NUMBER
SCALE 1:1
FILE NO. X4509
DIE NO. 6855

DADE COUNTY USE

PRODUCT REVISED
as complying with the Florida
Building Code
Acceptance No 14-0102.06
Expiration Date 11/15/2017
By
Miami Dade Product Control

ENGINEER STAMP

LEON MURRAY
LICENSE
No 57110
STATE OF
FLORIDA
PROFESSIONAL ENGINEER

CUSTOMER PHONE :
PROJECT # : DADETEST_LMI-1
PHASE :
DRAWN BY : BBR
REVIEWED BY :
DATE : 03/05/12

PROJECT NAME : LARGE MISSLE IMPACT TEST
SKYLIGHTS FOR DADE COUNTY, FL

ACRALIGHT SOLAR
CALIFORNIA OFFICE: 17752 MITCHELL N. SUITE H, IRVINE, CA. 92614

PAGE : 21
OF : 28

Leon Murray 207-651-3064 May 28, 2014
1172 Lebanon Road, North Berwick, ME 03906
Florida License No: 57110

SECTION PROPERTIES (DIE 6864)

3"DP. ALUM. HEAD/CROSS RAFTER 6063-T6

A = 1.886

Ix = 1.403

Iy = 1.120

Sx = 0.745

Sy = 1.120

R = 0.863

WT. PER FT. = 2.263lb.

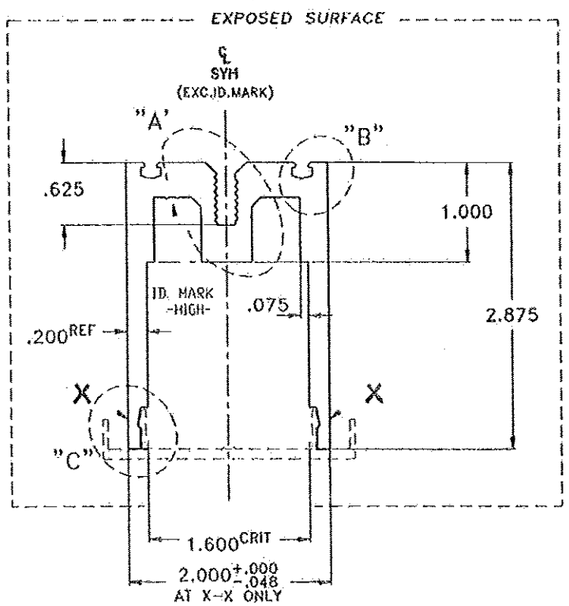

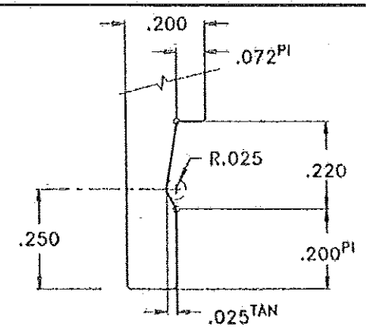

DETAIL "C"
SCALE 4 :1

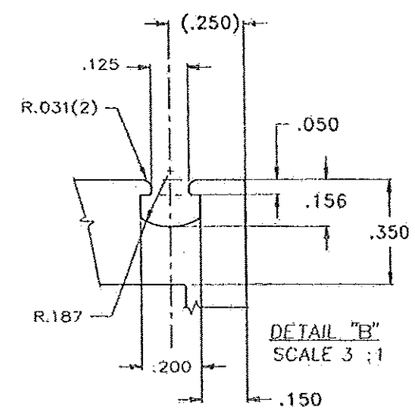

DETAIL "B"
SCALE 3 :1

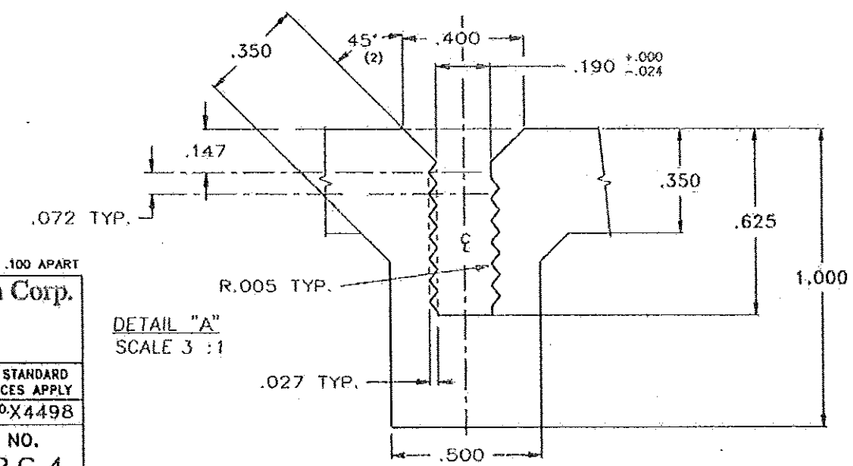

DETAIL "A"
SCALE 3 :1

NOTE: — TYP. WALL EXCEPT AS NOTED
UNMARKED CORNERS .010 R.

FRONTIER ID. MARK = TWO .010 R. x .100 APART

AREA 1.886	PORTS 0x2-1H	BKR. 6055	
WT/FT 2.263	W/P — —	BOL. 1-3	
PERI. 18.056	FACTOR 8	CLASS SOLID	
DWN CD	DATE 4.23.03	MAT'L C.S.3.6	
CHKD	DATE	STANDARD TOLERANCES UNLESS OTHERWISE NOTED	

Frontier Aluminum Corp.
2480 Railroad St.
Corona, Co 92880-5418
(951) 735-1770 FAX 735-1895

UNLESS OTHERWISE SPECIFIED, STANDARD ALUMINUM ASSOCIATION TOLERANCES APPLY

LET	REVISION	BY	DATE

CUSTOMER: ACRALIGHT
PART NAME:
PART NUMBER:
SCALE: 1:1
AW: 8812/97
FILE NO. X4498
DIE NO. 6864

DADE COUNTY USE

PRODUCT REVISED
as complying with the Florida
Building Code
Acceptance No 14-0102.06
Expiration Date 11/15/2017
By
Miami Dade Product Control

ENGINEER STAMP

LEON MURRAY
LICENSE
No 57110
STATE OF
FLORIDA
PROFESSIONAL ENGINEER

CUSTOMER PHONE :
PROJECT # : DADETEST_LMI-1
PHASE :
DRAWN BY : BBR
REVIEWED BY :
DATE : 03/05/12

PROJECT NAME : LARGE MISSLE IMPACT TEST
SKYLIGHTS FOR DADE COUNTY, FL

ACRALIGHT SOLAR
CALIFORNIA OFFICE: 17752 MITCHELL N. SUITE H, IRVINE, CA. 92614

PAGE : 22
OF : 28

Leon Murray 207-651-3064 May 28, 2014
1172 Lebanon Road, North Berwick, ME 03906
Florida License No: 57110

CUSTOMER: ACRALIGHT		SYM	REVISION	BY	DATE
PART NAME	PART NUMBER				

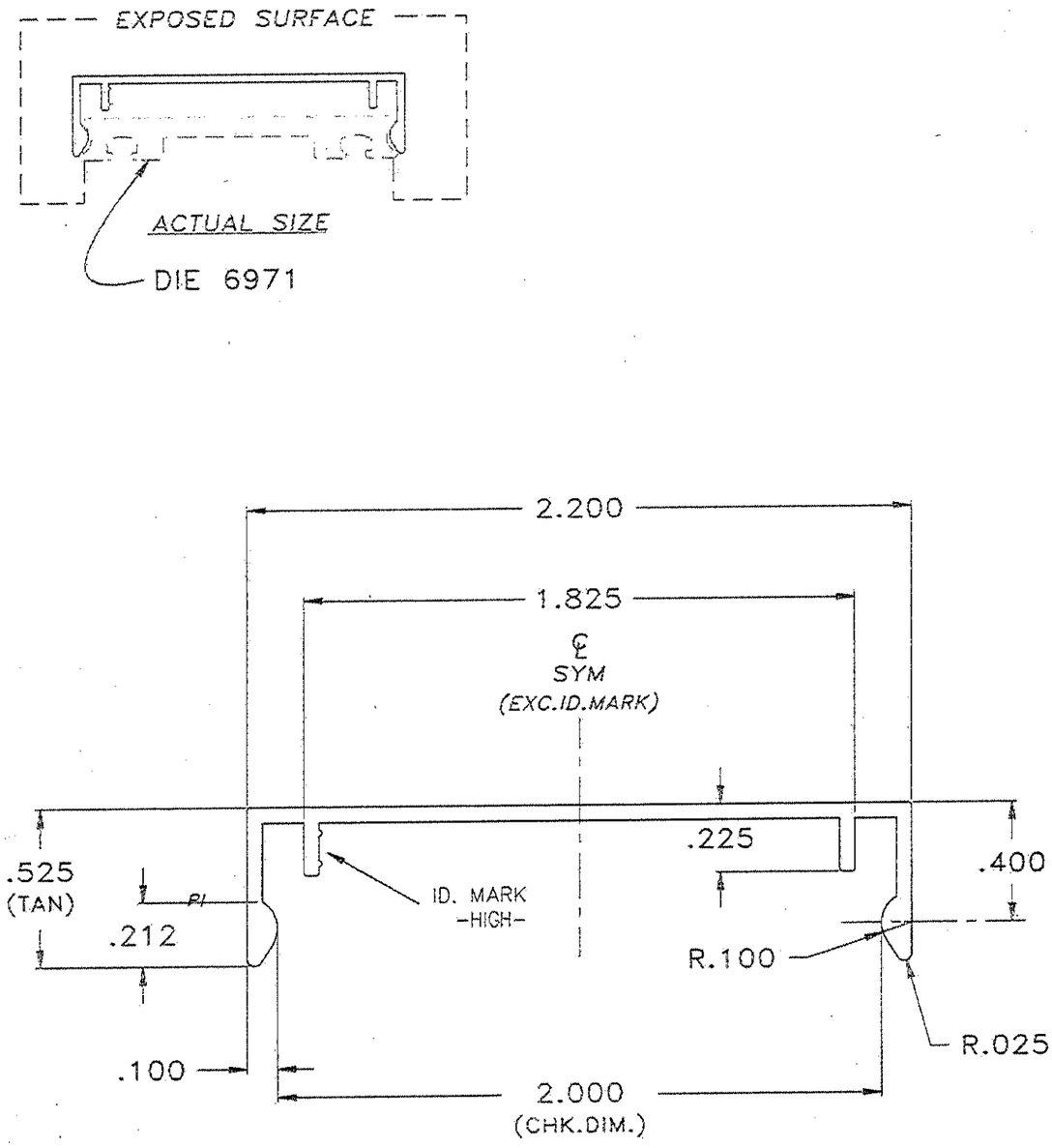

UNLESS OTHERWISE SPECIFIED, STANDARD ALUMINUM ASSOCIATION TOLERANCES APPLY • FRONTIER ID. MARK: TWO .010 R x .100 APART

AREA	.187	PORTS 9x1-4H	DWN CD	PRESS	Frontier Aluminum Corp. 2480 Railroad St. Corona, Ca Ph: [951] 735-1770 Fax 735-1895 http://www.frontier-aluminum.com			
WT/FT	.225	W/P STD 4	SCALE 2:1					
PERI.	7.117	BKR. 1501	DATE 4.22.03	RR				
FACTOR	32	BOL. STD 4	FILE# X4491	UNMARKED WALLS .050	ALLOY & TEMPER 6063-T5	DIE NO. 6972	REV. N/C	
C.C.D.	2.25	CLASS SOLID	AW:402-0	UNMARKED CORNERS R.010				

ALUM. RAFTER SNAP COVER
(DIE 7972) 6063-T6 ALUM.
WT. PER FT. = 0.225lb.
FOR EXACT DIMS. REF. APPENDIX B

DADE COUNTY USE

PRODUCT REVISED
as complying with the Florida
Building Code
Acceptance No 14-0102.06
Expiration Date 11/15/2017
By
Miami Dade Product Control

ENGINEER STAMP

LEON MURRAY LICENSE No 57110 STATE OF FLORIDA PROFESSIONAL ENGINEER

Leon Murray 207-651-3064 May 28, 2014
1172 Lebanon Road, North Berwick, ME 03906
Florida License No: 57110

ACRALIGHT SOLAR
CALIFORNIA OFFICE: 17752 MITCHELL N. SUITE H, IRVINE, CA. 92614

PROJECT NAME : LARGE MISSLE IMPACT TEST SKYLIGHTS FOR DADE COUNTY, FL	CUSTOMER PHONE :		
	PROJECT # : DADETEST_LMI-1		PHASE :
	DRAWN BY : BBR	REVIEWED BY :	DATE : 03/05/12

CUSTOMER: ACRALIGHT		SYM	REVISION	BY	DATE
PART NAME	PART NUMBER				

NO EXPOSED SURFACES

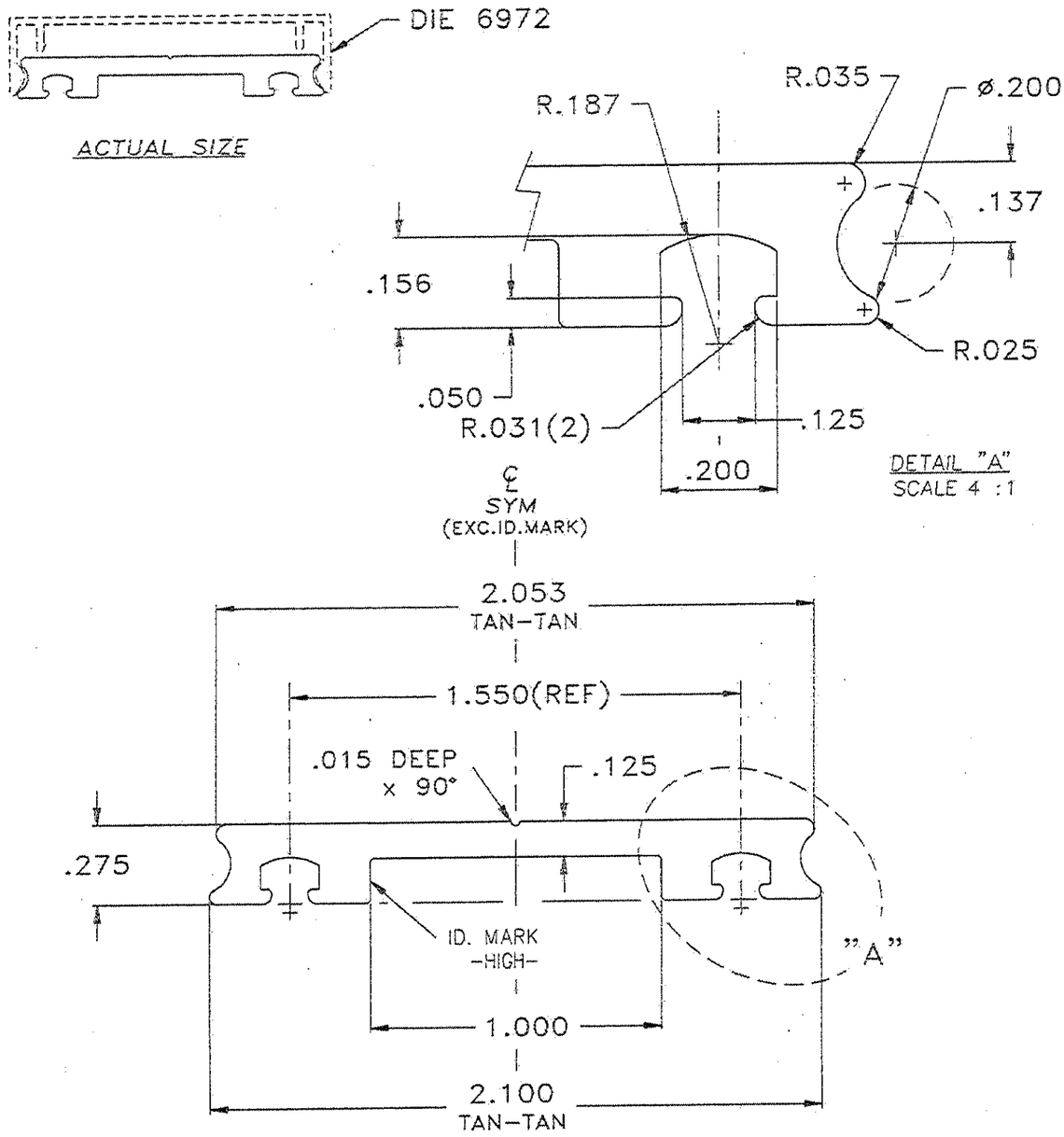

UNLESS OTHERWISE SPECIFIED, STANDARD ALUMINUM ASSOCIATION TOLERANCES APPLY ● FRONTIER ID. MARK: TWO .010 R x .100 APART

AREA	.352	PORTS 9X2-3H	DWN CD	PRESS	Frontier Aluminum Corp. 2480 Railroad St. Corona, Ca Ph:[951] 735-1770 Fax 735-1895 http://www.frontier-aluminum.com			
WT/FT	.422	W/P --	SCALE 2:1					
PERI.	5.780	BKR. 2806	DATE 4.22.03 RK					
FACTOR	14	BOL. 3-3	FILE# X4490	UNMARKED WALLS	ALLOY & TEMPER	DIE NO.	REV.	
C.C.D.	2.2	CLASS SOLID	AWW:693-0	UNMARKED CORNERS R.010	6063-T5	6971	N/C	

ALUM. RAFTER PRESSURE BAR
(DIE 6971) 6063-T6 ALUM.
WT. PER FT. = 0.422lb.
FOR EXACT DIMS. REF. APPENDIX B

ENGINEER STAMP

LEON MURRAY LICENSE No 57110 STATE OF FLORIDA PROFESSIONAL ENGINEER

DADE COUNTY USE

PRODUCT REVISED as complying with the Florida Building Code
Acceptance No 14-0102.06
Expiration Date 11/15/2017
By Miami Dade Product Control

Leon Murray 207-651-3064 May 28, 2014
1172 Lebanon Road, North Berwick, ME 03906
Florida License No: 57110

ACRALIGHT SOLAR
CALIFORNIA OFFICE: 17752 MITCHELL N. SUITE H, IRVINE, CA. 92614

PROJECT NAME : LARGE MISSLE IMPACT TEST SKYLIGHTS FOR DADE COUNTY, FL	CUSTOMER PHONE :		
	PROJECT # : DADETEST_LMI-1		PHASE :
	DRAWN BY : BBR	REVIEWED BY :	DATE : 03/05/12

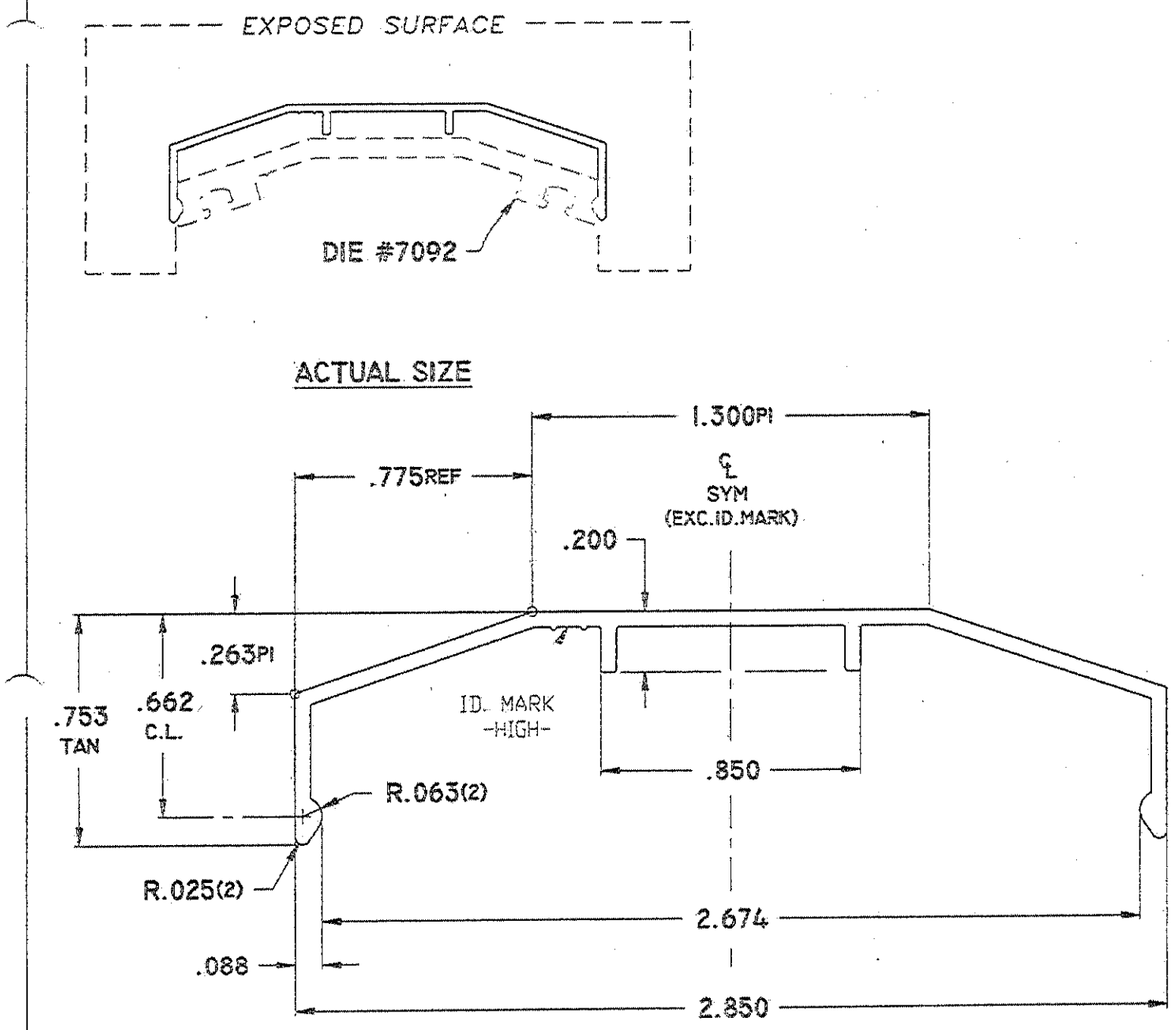

NOTE: .050 TYP. WALL EXCEPT AS NOTED
UNMARKED CORNERS .010 R.

FRONTIER ID. MARK = TWO .010 R. x .100 APART

AREA .213	PORTS 9xI-3H	BKR. 5051	
WT/FT .255	W/P STD 3	BOL. STD 3	
PERI. 8.349	FACTOR 33	CLASS SOLID	
DWN CD	DATE 4.23.03	MAT'L 6063-T5	C.S. 2.9
CHKD	DATE	STANDARD TOLERANCES UNLESS OTHERWISE NOTED	

Frontier Aluminum Corp.
2480 Railroad St.
Corona, Ca 91720-5418
[909] 735-1770 FAX 735-1895

UNLESS OTHERWISE SPECIFIED, STANDARD ALUMINUM ASSOCIATION TOLERANCES APPLY

LET	REVISION	BY	DATE

CUSTOMER: ACRALIGHT
PART NAME:
PART NUMBER:
SCALE: 2:1
AW 5220/88
FILE NO. X4499
DIE NO. 7091

ALUM. HIP/RIDGE SNAP COVER
(DIE 7091) 6063-T6 ALUM.
WT. PER FT. = 0.257lb.
FOR EXACT DIMS. REF. APPENDIX B

ENGINEER STAMP

LEON MURRAY LICENSE No 57110 STATE OF FLORIDA PROFESSIONAL ENGINEER

DADE COUNTY USE

PRODUCT REVISED as complying with the Florida Building Code
Acceptance No. 14-0102.06
Expiration Date 11/15/2017
By Miami Dade Product Control

Leon Murray 207-651-3064 May 28, 2014
1172 Lebanon Road, North Berwick, ME 03906
Florida License No: 57110

ACRALIGHT SOLAR
CALIFORNIA OFFICE: 17752 MITCHELL N. SUITE H, IRVINE, CA. 92614

PROJECT NAME : LARGE MISSLE IMPACT TEST SKYLIGHTS FOR DADE COUNTY, FL

CUSTOMER PHONE :
PROJECT # : DADETEST_LMI-1
PHASE :
DRAWN BY : BBR
REVIEWED BY :
DATE : 03/05/12

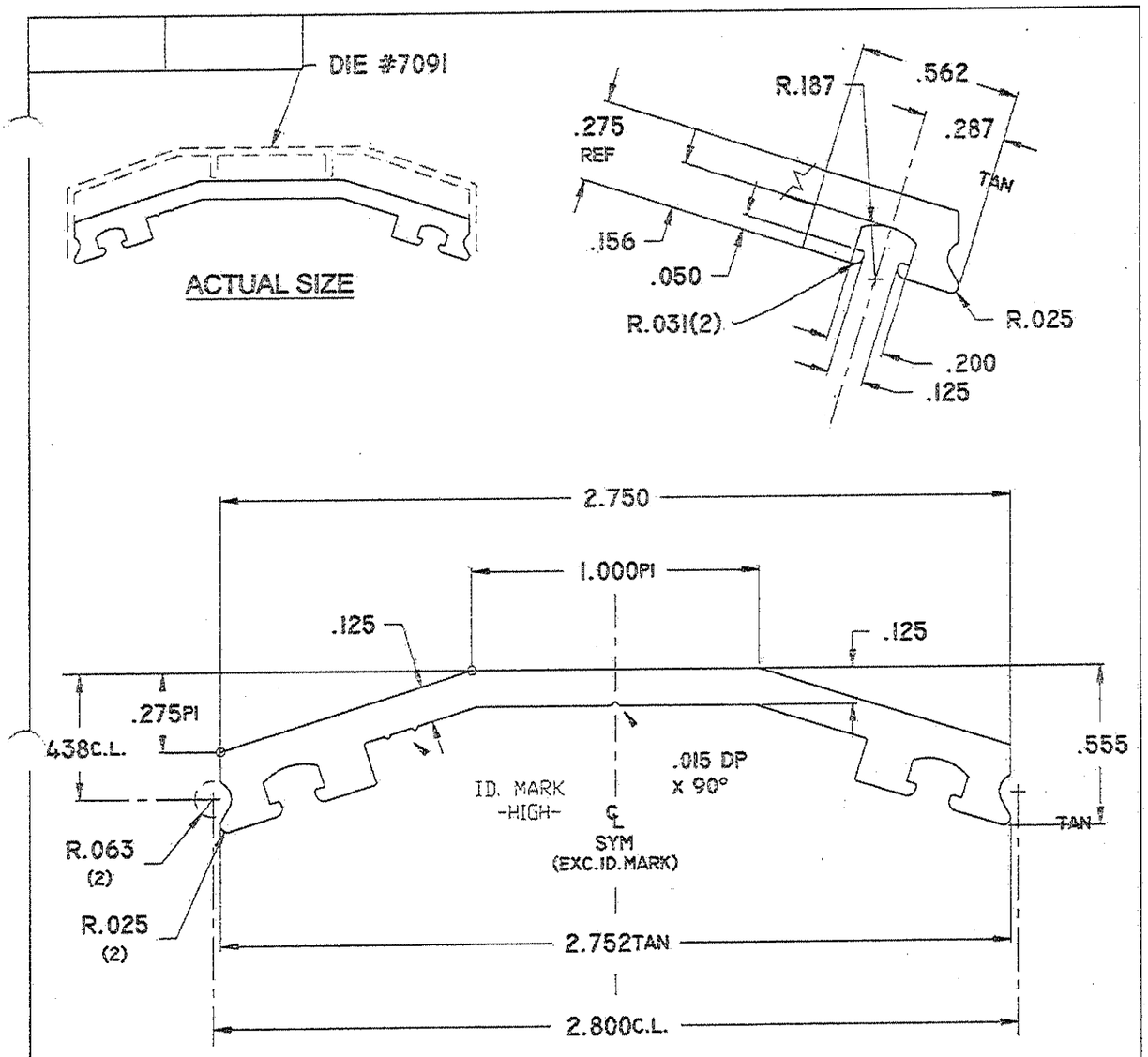

NOTE: _____ TYP. WALL EXCEPT AS NOTED
UNMARKED CORNERS .010 R.

FRONTIER ID. MARK = TWO .010 R. x .100 APART

AREA .459	PORTS 9xl-3H	BKR. 5052	Frontier Aluminum Corp. 2480 Railroad St. Corona, Ca 91720-5418 [909] 735-1770 FAX 735-1895
WT/FT .551	W/P STD 3	BOL. STD 3	
PERI. 7.408	FACTOR 13	CLASS SOLID	
DWN CD	DATE 4.23.03	MAT'L 6063-T5 C.S. 2.8	UNLESS OTHERWISE SPECIFIED, STANDARD ALUMINUM ASSOCIATION TOLERANCES APPLY
CHKD	DATE	STANDARD TOLERANCES UNLESS OTHERWISE NOTED	

LET	REVISION	BY	DATE	CUSTOMER ACRALIGHT	SCALE 2:1 AW 0250/94	FILE NO. X4500
				PART NAME		DIE NO. 7092
				PART NUMBER		

ALUM. HIP/RIDGE PRESSURE BAR
(DIE 7092) 6063-T6 ALUM.
WT. PER FT. = 0.551lb.
FOR EXACT DIMS. REF. APPENDIX B

ENGINEER STAMP

LEON MURRAY LICENSE No 57110 STATE OF FLORIDA PROFESSIONAL ENGINEER

DADE COUNTY USE

PRODUCT REVISED as complying with the Florid Building Code
Acceptance No. 14-0102.06
Expiration Date 11/15/2017
By
Miami Dade Product Control

Leon Murray 207-651-3064 May 28, 2014
1172 Lebanon Road, North Berwick, ME 03906
Florida License No: 57110

ACRALIGHT SOLAR
CALIFORNIA OFFICE: 17752 MITCHELL N. SUITE H, IRVINE, CA. 92614

PROJECT NAME : LARGE MISSLE IMPACT TEST SKYLIGHTS FOR DADE COUNTY, FL	CUSTOMER PHONE :		
	PROJECT # : DADETEST_LMI-1		PHASE :
	DRAWN BY : BBR	REVIEWED BY :	DATE : 03/05/12

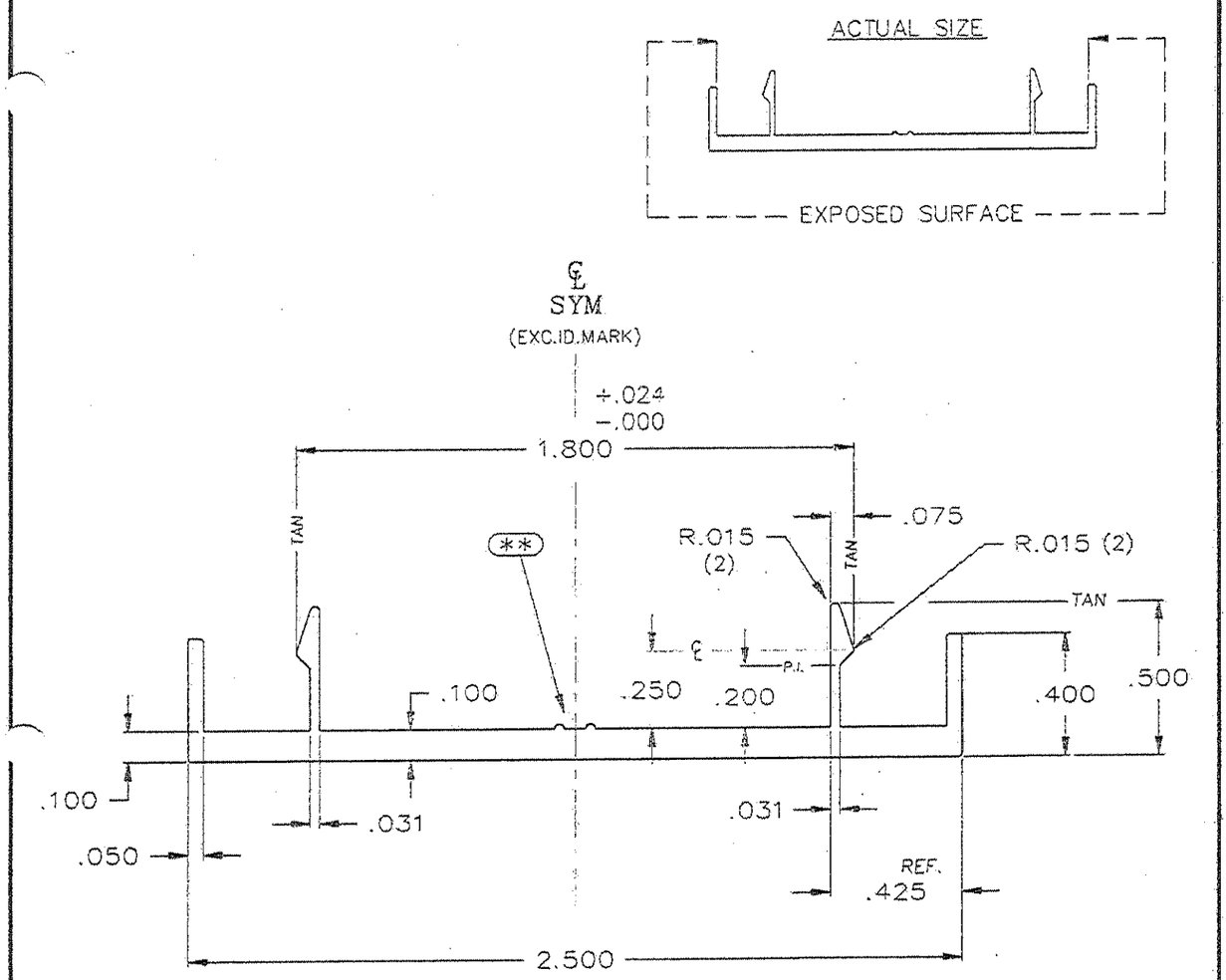

NOTE: _____ TYP. WALL EXCEPT AS NOTED
UNMARKED CORNERS .010 R.

(**) INDICATES FRONTIER'S ID. MARK
(TWO .010 R. X .010 HIGH X .100 APART)

AREA .314	PORTS 2	BKR. 3435	Frontier Aluminum Corp.
WT/FT .376	W/P 2749	BOLSTER 2-3	2480 Railroad St.
PERI. 8.031	FACTOR 21	CLASS SOLID	Corona, Ca 91720-5418
DWN CD DATE 4.22.03	MAT'L 6063-t5	C.S. 2.7"	[909] 735-1770 FAX 735-1895
CHKD DATE	STANDARD TOLERANCES UNLESS OTHERWISE NOTED		EXTRUSION RATIO (HOLE DIE) 6 1/4" CYL. / 7 3/8" CYL.

LET	REVISION	BY	DATE			
				CUSTOMER ACRALIGHT	SCALE 2:1	FILE NO. X4513
				PART NAME		DIE NO. 6861
				PART NUMBER		

ALUM. PURLIN SNAP BOTTOM
6061-T6 ALUM.
WT. PER FT. = 0.376lb.
FOR EXACT DIMS. REF. APPENDIX B

ENGINEER STAMP

STATE OF FLORIDA
LEON MURRAY
LICENSE
No 57110
PROFESSIONAL ENGINEER

DADE COUNTY USE

PRODUCT REVISED as complying with the Florida Building Code
Acceptance No. 14-0102.06
Expiration Date 11/15/2017
By
Miami Dade Product Control

Leon Murray 207-651-3064 May 28, 2014
1172 Lebanon Road, North Berwick, ME 03906
Florida License No: 57110

ACRALIGHT SOLAR
CALIFORNIA OFFICE: 17752 MITCHELL N. SUITE H, IRVINE, CA. 92614

PROJECT NAME : LARGE MISSLE IMPACT TEST SKYLIGHTS FOR DADE COUNTY, FL	CUSTOMER PHONE :		
	PROJECT # : DADETEST_LMI-1		PHASE :
	DRAWN BY : BBR	REVIEWED BY :	DATE : 03/05/12

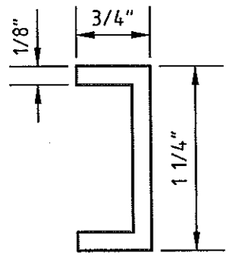

ALUM. CHANNEL SPACER @ I.G.U. (TYPE "A")
(S2) 6063-T5 ALUM.
WT. PER FT. = 0.299lb.

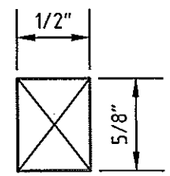

ALUM. BAR SPACER @ TYPE "B" GLAZING
(S1) 6061-T6 ALUM.
WT. PER FT. = 0.374lb.

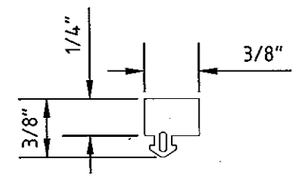

EPDM GASKET TREMCO #TR6095S/E/W
HARDNESS = (SHORE A) 50 ±5 DUROMETER
TENSILE STRENGTH = 800 PSI (MIN.)
ELONGATION = 300% (MIN.)
TEAR, DIE 8, PSI = 65 (MIN.)
COLOR = BLACK

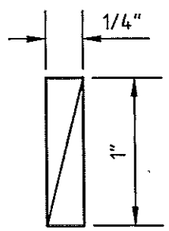

THERMOPLASTIC RUBBER (TPR)
GLAZING BLOCK @ TYPE "A"
HARDNESS = (SHORE A) 50 ±5 DUROMETER
TENSILE STRENGTH = 800 PSI (MIN.)
ELONGATION = 300% (MIN.)
TEAR, DIE 8, PSI = 65 (MIN.)
COLOR = BLACK

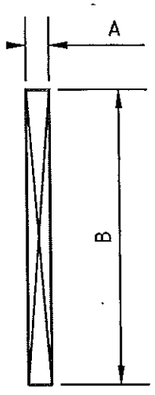

ALUM. BLOCK SUPPORT @ TYPE "B"
6061-T5 ALUM.
A=.156" B=2"

ALUM. BLOCK SUPPORT @ TYPE "B"
6061-T5 ALUM.
A=.156" B=1 1/2"

ALUM. BAR SPACER
(S3) 6061-T5 ALUM.
A=.250" B=.500"

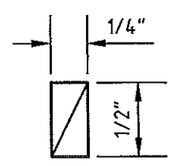

THERMOPLASTIC RUBBER (TPR)
GLAZING BLOCK @ TYPES "B & C"
HARDNESS = (SHORE A) 50 ±5 DUROMETER
TENSILE STRENGTH = 800 PSI (MIN.)
ELONGATION = 300% (MIN.)
TEAR, DIE 8, PSI = 65 (MIN.)
COLOR = BLACK

Leon Murray 207-651-3064
1172 Lebanon Road
North Berwick, ME 03906
Florida License No: 57110
May 28, 2014

DADE COUNTY USE

PRODUCT REVISED
as complying with the Florid.
Building Code
Acceptance No 14-0102.06
Expiration Date 11/15/2017
By
Miami Dade Product Control

ENGINEER STAMP

LEON MURRAY
LICENSE
No 57110
STATE OF
FLORIDA
PROFESSIONAL ENGINEER

CUSTOMER PHONE :
PROJECT # : DADETEST_LMI-1
PHASE :
DRAWN BY : BBR
REVIEWED BY :
DATE : 03/05/12

PROJECT NAME : LARGE MISSLE IMPACT TEST
SKYLIGHTS FOR DADE COUNTY, FL

ACRALIGHT SOLAR
CALIFORNIA OFFICE: 17752 MITCHELL N. SUITE H, IRVINE, CA. 92614

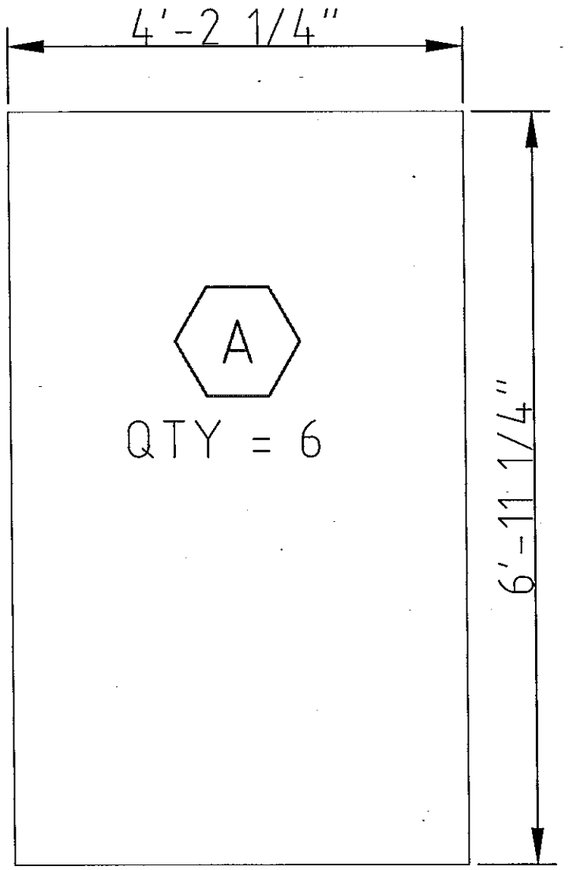

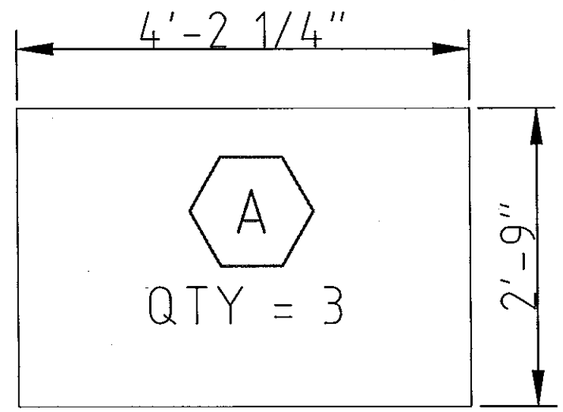

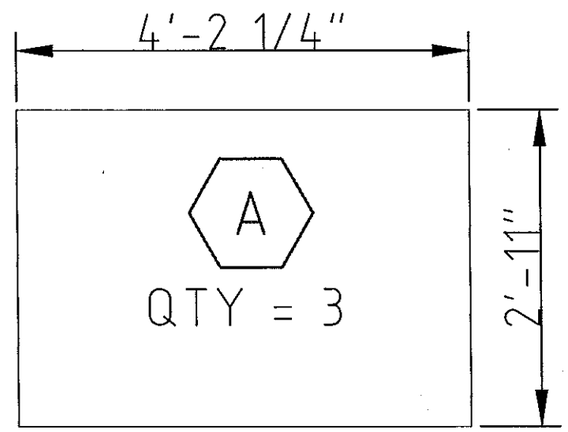

Leon Murray 207-651-3064
1172 Lebanon Road
North Berwick, ME 03906
Florida License No: 57110
May 28, 2014

DADE COUNTY USE

PRODUCT REVISED
as complying with the Florida
Building Code
Acceptance No 14-0102.06
Expiration Date 11/15/2017
By
Miami Dade Product Control

ENGINEER STAMP

LEON MURRAY
LICENSE
No 57110
STATE OF
FLORIDA
PROFESSIONAL ENGINEER

PROJECT NAME : LARGE MISSLE IMPACT TEST
SKYLIGHTS FOR DADE COUNTY, FL

CUSTOMER PHONE :
PROJECT # : DADETEST_LMI-1
PHASE :
DRAWN BY : BBR
REVIEWED BY :
DATE : 03/05/12

ACRALIGHT SOLAR
CALIFORNIA OFFICE: 17752 MITCHELL N. SUITE H, IRVINE, CA. 92614

PAGE : G1
OF : 28

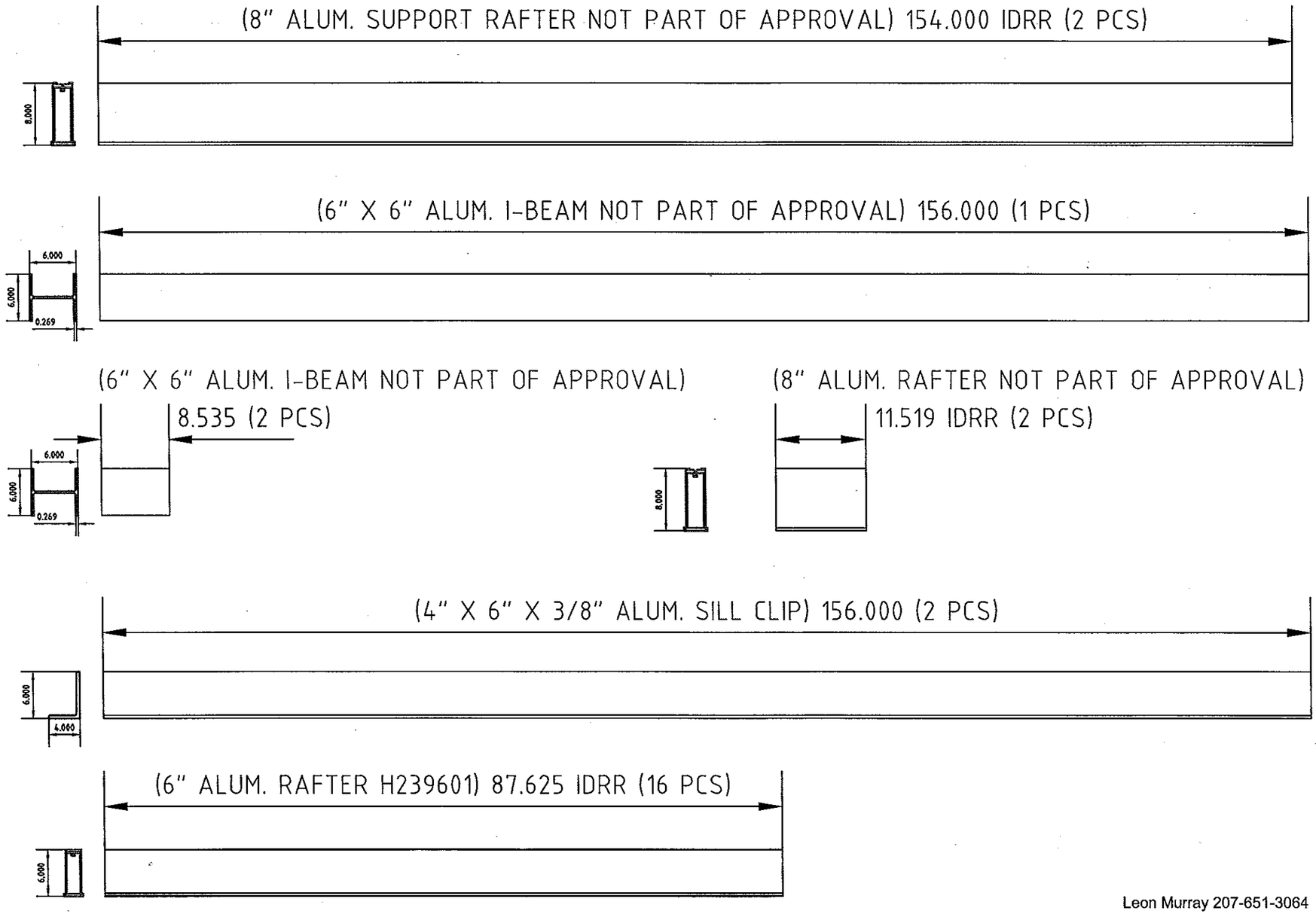

Leon Murray 207-651-3064
1172 Lebanon Road
North Berwick, ME 03906
Florida License No: 57110
May 28, 2014

DADE COUNTY USE

PRODUCT REVISED
as complying with the Florida
Building Code
Acceptance No 14-0102.06
Expiration Date 11/15/2017
By
Miami Dade Product Control

ENGINEER STAMP

LEON MURRAY
LICENSE
No 57110
STATE OF
FLORIDA
PROFESSIONAL ENGINEER

CUSTOMER PHONE :
PROJECT # : DADETEST_LMI-1
PHASE :
DRAWN BY : BBR
REVIEWED BY :
DATE : 03/05/12

PROJECT NAME : LARGE MISSLE IMPACT TEST
SKYLIGHTS FOR DADE COUNTY, FL

ACRALIGHT SOLAR
CALIFORNIA OFFICE: 17752 MITCHELL N. SUITE H, IRVINE, CA. 92614

PAGE : FAB1
OF : 28

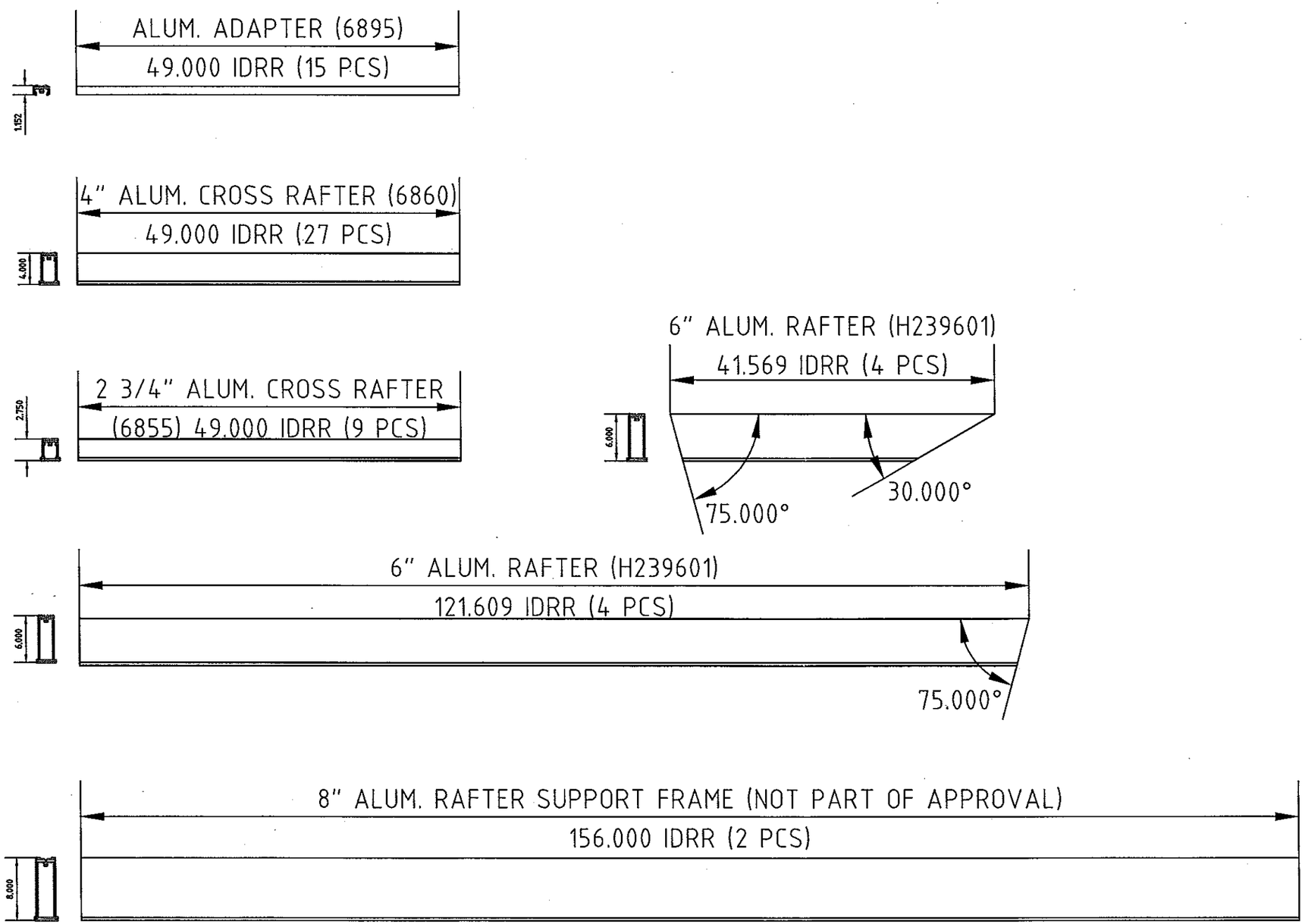

Leon Murray 207-651-3064 May 28, 2014
1172 Lebanon Road, North Berwick, ME 03906
Florida License No: 57110

DADE COUNTY USE

PRODUCT REVISED
as complying with the Florida
Building Code
Acceptance No 14-0102.06
Expiration Date 11/15/2017
By
Miami Dade Product Control

ENGINEER STAMP

LEON MURRAY
LICENSE
No 57110
STATE OF
FLORIDA
PROFESSIONAL ENGINEER

CUSTOMER PHONE : .
PROJECT # : DADETEST_LMI-1
PHASE :
DRAWN BY : BBR
REVIEWED BY :
DATE : 03/05/12

PROJECT NAME : LARGE MISSLE IMPACT TEST
SKYLIGHTS FOR DADE COUNTY, FL

ACRALIGHT SOLAR
CALIFORNIA OFFICE: 17752 MITCHELL N. SUITE H, IRVINE, CA. 92614

PAGE : FAB2
OF : 28

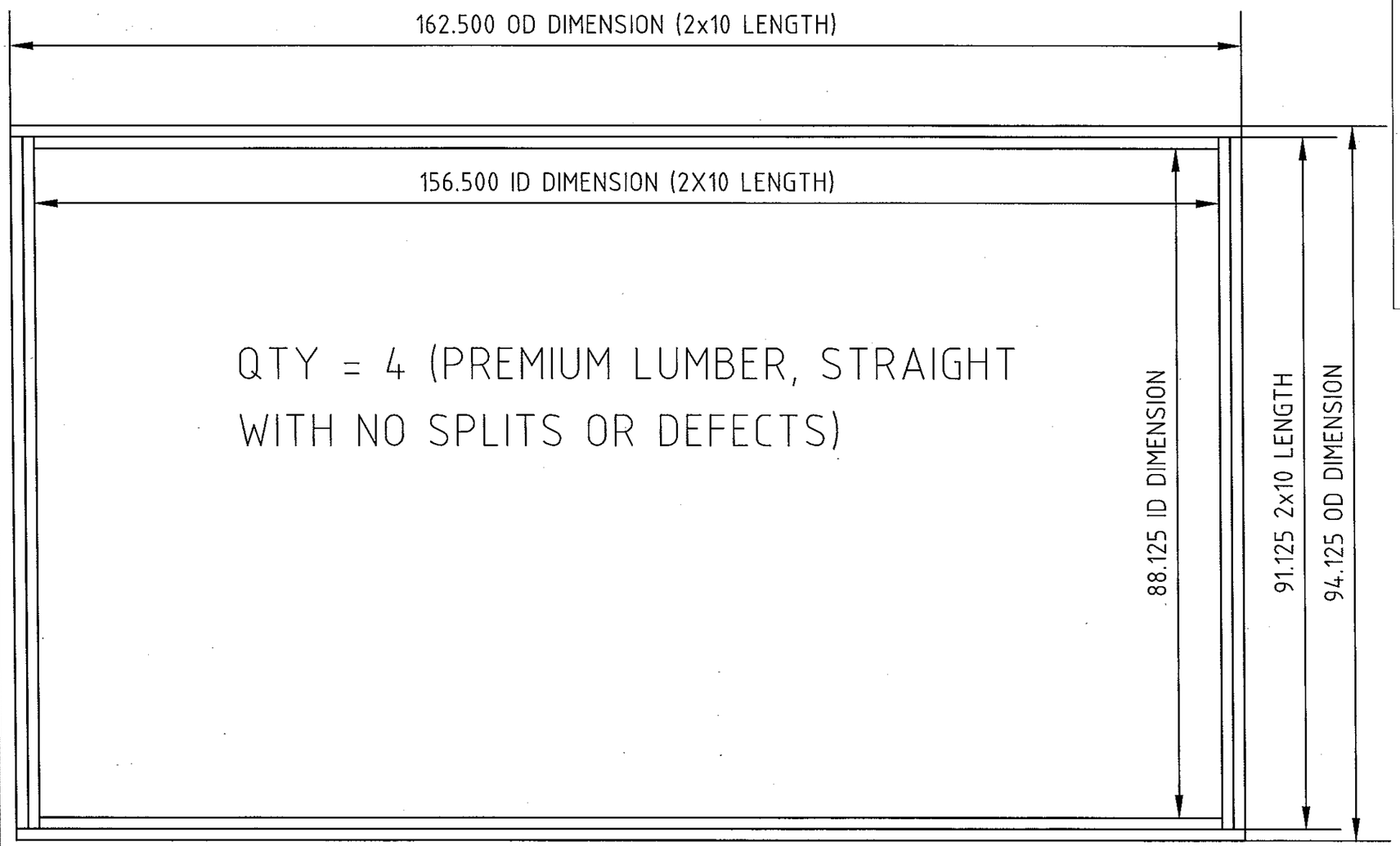

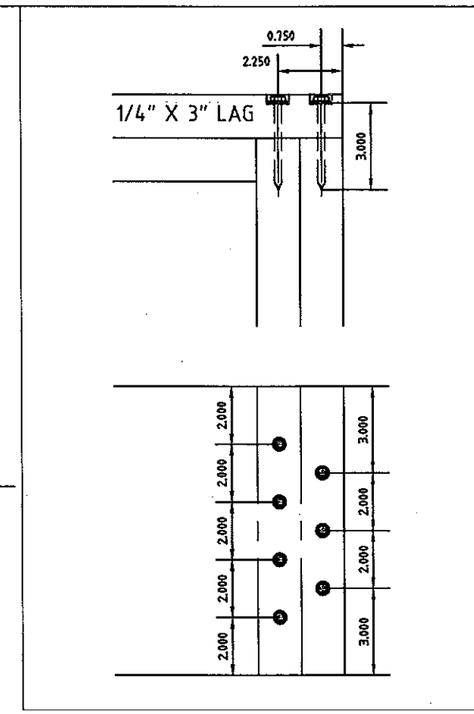

DADE COUNTY USE

PRODUCT REVISED
as complying with the Florida
Building Code
Acceptance No 14-0102.06
Expiration Date 11/15/2017
By
Miami Dade Product Control

ENGINEER STAMP

LEON MURRAY
LICENSE
No 57110
STATE OF
FLORIDA
PROFESSIONAL ENGINEER

CUSTOMER PHONE :
PROJECT # : DADETEST_LMI-1
PHASE :
DRAWN BY : BBR
REVIEWED BY :
DATE : 03/05/12

PROJECT NAME : LARGE MISSLE IMPACT TEST
SKYLIGHTS FOR DADE COUNTY, FL

ACRALIGHT SOLAR
CALIFORNIA OFFICE: 17752 MITCHELL N. SUITE H, IRVINE, CA. 92614

PAGE : FAB3
OF : 28

Leon Murray 207-651-3064 May 28, 2014
1172 Lebanon Road, North Berwick, ME 03906
Florida License No: 57110

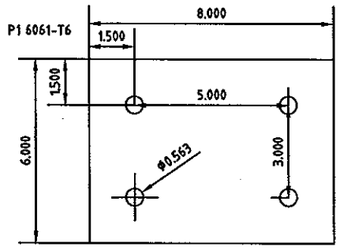

6X8X1/4" ALUMINUM PLATE
16 PCS

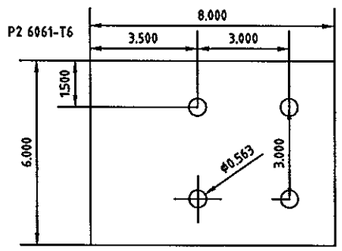

6X8X1/4" ALUMINUM PLATE
16 PCS

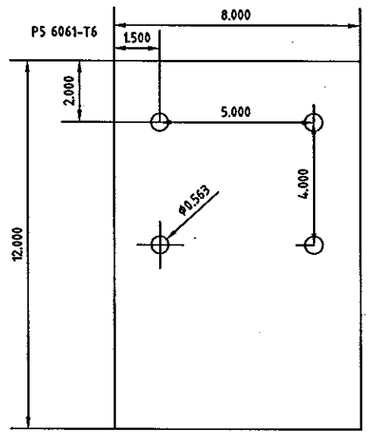

12X8X1/4" ALUMINUM PLATE
2 PCS

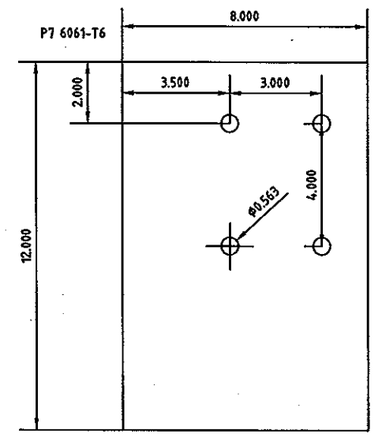

12X8X1/4" ALUMINUM PLATE
2 PCS

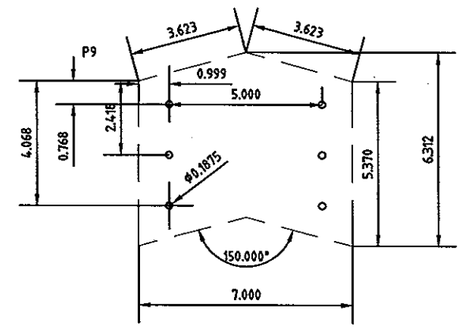

8x6.312x1/4" ALUMINUM PLATE
6061-T6 8 PCS 1/4" X 8" GUSSET PLATE

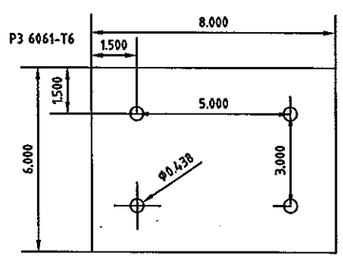

6X8X1/4" ALUMINUM PLATE
4 PCS

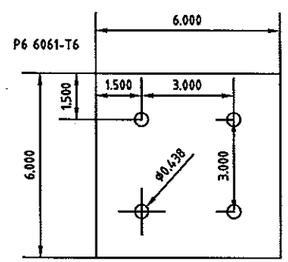

6X6X1/4" ALUMINUM PLATE
2 PCS NOT PART OF TEST

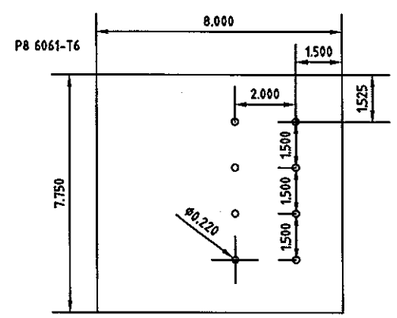

8X7.750X1/4" ALUMINUM PLATE
2 PCS NOT PART OF TEST

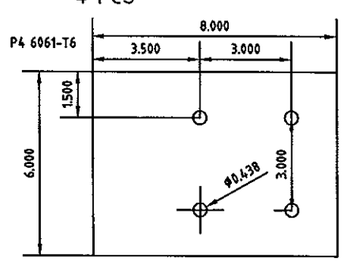

6X8X1/4" ALUMINUM PLATE
4 PCS

Leon Murray 207-651-3064
1172 Lebanon Road
North Berwick, ME 03906
Florida License No: 57110
May 28, 2014

DADE COUNTY USE

PRODUCT REVISED
as complying with the Florida
Building Code
Acceptance No 14-0102.06
Expiration Date 11/15/2017
By
Miami Dade Product Control

ENGINEER STAMP

LEON MURRAY
LICENSE
No 57110
STATE OF
FLORIDA
PROFESSIONAL ENGINEER

CUSTOMER PHONE :
PROJECT # : DADETEST_LMI-1
PHASE : 1
DRAWN BY : BBR
REVIEWED BY :
DATE : 03/05/12
PROJECT NAME : LARGE MISSLE IMPACT TEST SKYLIGHTS FOR DADE COUNTY, FL

ACRALIGHT SOLAR
CALIFORNIA OFFICE: 17752 MITCHELL N. SUITE H, IRVINE, CA. 92614

PAGE : FAB4
OF : 28