MIAMI-DADE COUNTY
DEPARTMENT OF REGULATORY AND ECONOMIC RESOURCES (RER)
BOARD AND CODE ADMINISTRATION DIVISION

MIAMI-DADE COUNTY
PRODUCT CONTROL SECTION
11805 SW 26 Street, Room 208
T (786) 315-2590 F (786) 315-2599
www.miamidade.gov/economy

NOTICE OF ACCEPTANCE (NOA)

T. M. Windows LLC
601 NW 12th Ave.
Pompano Beach, FL 33069

SCOPE:

This NOA is being issued under the applicable rules and regulations governing the use of construction materials. The documentation submitted has been reviewed and accepted by Miami-Dade County RER - Product Control Section to be used in Miami Dade County and other areas where allowed by the Authority Having Jurisdiction (AHJ).

This NOA shall not be valid after the expiration date stated below. The Miami-Dade County Product Control Section (In Miami Dade County) and/or the AHJ (in areas other than Miami Dade County) reserve the right to have this product or material tested for quality assurance purposes. If this product or material fails to perform in the accepted manner, the manufacturer will incur the expense of such testing and the AHJ may immediately revoke, modify, or suspend the use of such product or material within their jurisdiction. RER reserves the right to revoke this acceptance, if it is determined by Miami-Dade County Product Control Section that this product or material fails to meet the requirements of the applicable building code.

This product is approved as described herein, and has been designed to comply with the Florida Building Code, including the High Velocity Hurricane Zone.

DESCRIPTION: Series "805" Aluminum Horizontal Rolling Window – L.M.I.

APPROVAL DOCUMENT: Drawing No. **W08–81**, titled "Series 805 Alum. Horizontal Rolling Wdw. (L.M.I.)", sheets 1 through 7 of 7, dated 09/19/08, with revision D dated 11/15/13, prepared by Al–Farooq Corporation, signed and sealed by Javad Ahmad, P.E., bearing the Miami–Dade County Product Control Revision stamp with the Notice of Acceptance number and expiration date by the Miami–Dade County Product Control Section.

MISSILE IMPACT RATING: Large and Small Missile Impact Resistant

LABELING: Each unit shall bear a permanent label with the manufacturer's name or logo, city, state, model/series, and following statement: "Miami-Dade County Product Control Approved", unless otherwise noted herein.

RENEWAL of this NOA shall be considered after a renewal application has been filed and there has been no change in the applicable building code negatively affecting the performance of this product.

TERMINATION of this NOA will occur after the expiration date or if there has been a revision or change in the materials, use, and/or manufacture of the product or process. Misuse of this NOA as an endorsement of any product, for sales, advertising or any other purposes shall automatically terminate this NOA. Failure to comply with any section of this NOA shall be cause for termination and removal of NOA.

ADVERTISEMENT: The NOA number preceded by the words Miami-Dade County, Florida, and followed by the expiration date may be displayed in advertising literature. If any portion of the NOA is displayed, then it shall be done in its entirety.

INSPECTION: A copy of this entire NOA shall be provided to the user by the manufacturer or its distributors and shall be available for inspection at the job site at the request of the Building Official.

This NOA **revises and renews NOA# 12-0321.02** and consists of this page 1 and evidence pages E-1, E-2 and E-3, as well as approval document mentioned above.

The submitted documentation was reviewed by **Manuel Perez, P.E.**

MIAMI-DADE COUNTY APPROVED

2/13/14

T. M. Windows LLC

NOTICE OF ACCEPTANCE: EVIDENCE SUBMITTED

A. DRAWINGS

1. Manufacturer's die drawings and sections.
2. Drawing No **W08–81**, titled "Series 805 Alum Horizontal Rolling Wdw. (L.M.I.)", sheets 1 through 7 of 7, dated 09/19/08, with revision D dated 11/15/13, prepared by Al–Farooq Corporation, signed and sealed by Javad Ahmad, P.E.

B. TESTS

1. Test reports on: 1) Uniform Static Air Pressure Test, Loading per FBC TAS 202–94
   2) Large Missile Impact Test per FBC, TAS 201–94
   3) Cyclic Wind Pressure Loading per FBC, TAS 203–94
   4) Forced Entry Test, per FBC 2411 3.2.1 and TAS 202–94

   along with marked–up drawings and installation diagram of an aluminum horizontal rolling window, prepared by Fenestration Testing Laboratory, Inc., Test Report No. **FTL–5945**, dated 07/31/09, signed and sealed by Julio E. Gonzalez, P.E.
   (Submitted under NOA No. 09–1110.02)
2. Test reports on: 1) Air Infiltration Test, per FBC, TAS 202–94
   2) Uniform Static Air Pressure Test, Loading per FBC TAS 202–94
   3) Water Resistance Test, per FBC, TAS 202–94
   4) Large Missile Impact Test per FBC, TAS 201–94
   5) Cyclic Wind Pressure Loading per FBC, TAS 203–94
   6) Forced Entry Test, per FBC 2411 3.2.1, TAS 202–94

   along with marked–up drawings and installation diagram of an aluminum horizontal rolling window, prepared by Fenestration Testing Laboratory, Inc., Test Report No. **FTL–5457**, dated 01/22/08, signed and sealed by Carlos S. Rionda, P.E.
   (Submitted under NOA No. 09–0105.02)
3. Test reports on: 1) Uniform Static Air Pressure Test, Loading per FBC TAS 202-94
   2) Large Missile Impact Test per FBC, TAS 201–94
   3) Cyclic Wind Pressure Loading per FBC, TAS 203–94

   along with marked–up drawings and installation diagram of aluminum horizontal rolling window, prepared by Fenestration Testing Laboratory, Inc., Test Report No. **FTL–5459**, dated 01/17/08, signed and sealed by Michael R. Wenzel, P.E.
   (Submitted under NOA No. 09–0105.02)
4. Test reports on: 1) Uniform Static Air Pressure Test, Loading per FBC, TAS 202–94
   2) Large Missile Impact Test per FBC, TAS 201–94
   3) Cyclic Wind Pressure Loading per FBC, TAS 203–94

   along with marked–up drawings and installation diagram of an aluminum horizontal rolling window (XO), prepared by Fenestration Testing Laboratory, Inc., Test Report No. **FTL–3995,** dated 11/13/03, signed and sealed by Edmundo Largaespada, P.E.
   (Submitted under NOA No. 04–0120.01)

Manuel Perez, P.E.
Product Control Examiner
NOA No. 14-0107.08
Expiration Date: May 13, 2019
Approval Date: February 20, 2014

NOTICE OF ACCEPTANCE: EVIDENCE SUBMITTED

B. TESTS (CONTINUED)

5. Test reports on: 1) Air Infiltration Test, per FBC, TAS 202–94
2) Uniform Static Air Pressure Test, Loading per FBC, TAS 202–94
3) Water Resistance Test, per FBC, TAS 202–94
4) Large Missile Impact Test per FBC, TAS 201–94
5) Cyclic Wind Pressure Loading per FBC, TAS 203–94
6) Forced Entry Test, per FBC 2411 3.2.1 and TAS 202–94

along with marked–up drawings and installation diagram of an aluminum horizontal rolling window (XOX), prepared by Fenestration Testing Laboratory, Inc., Test Report No. **FTL–3946**, dated 11/04/03, signed and sealed by Edmundo Largaespada, P.E.
(Submitted under NOA No. 04–0120.01)

C. CALCULATIONS

1. Anchor verification calculations and structural analysis, complying with FBC–2007, revised and updated to **FBC-2010** on 02/27/12, prepared by Al–Farooq Corporation, signed and sealed by Javad Ahmad, P.E.
(Submitted under NOA#09-1110.02)

2. Glazing complies with **ASTM E1300-09**

D. QUALITY ASSURANCE

1. Miami-Dade Department of Regulatory and Economic Resources (RER)

E. MATERIAL CERTIFICATIONS

1. Notice of Acceptance No. **11–0624.02** issued to **E.I. DuPont DeNemours & Co.**, Inc. for their "**DuPont SentryGlas® Interlayer**" dated 08/25/11, expiring on 01/14/17.

2. Notice of Acceptance No. **12–1231.10** issued to **Eastman Chemical Company (MA)** for their "**Saflex Clear and Color Glass Interlayers**" dated 03/28/13, expiring on 05/21/16.

3. Notice of Acceptance No. **13–1126. 20** issued to **Allnex USA, Inc.** for their "**Uvekol® S Laminated Glass Interlayer**", dated 02/20/14, expiring on 02/08/19.

F. STATEMENTS

1. Statement letter of conformance, complying with **FBC-2010**, dated November 18, 2013, issued by Al-Farooq Corporation, signed and sealed by Javad Ahmad, P.E.

2. Statement letter of conformance, complying with **FBC-2010**, and of no financial interest, dated February 27, 2012, issued by Al-Farooq Corporation, signed and sealed by Javad Ahmad, P.E.
(Submitted under previous NOA#12–0321.02)

Manuel Perez

Manuel Perez, P.E.
Product Control Examiner
NOA No. 14-0107.08
Expiration Date: May 13, 2019
Approval Date: February 20, 2014

NOTICE OF ACCEPTANCE: EVIDENCE SUBMITTED

G. STATEMENTS

3. Laboratory compliance letter for Test Report No. **FTL–5945**, issued by Fenestration Testing Laboratory, Inc., dated 07/31/09, signed and sealed by Julio E. Gonzalez, P.E
   (Submitted under NOA#09–1110.02)
4. Laboratory compliance letter for Test Report No. **FTL–5457**, issued by Fenestration Testing Laboratory, Inc., dated 03/13/08, signed and sealed by Carlos S. Rionda, P.E.
   (Submitted under NOA No. 09–0105.02)
4. Laboratory compliance letter for Test Report No. **FTL–5459**, issued by Fenestration Testing Laboratory, Inc., dated 02/21/08, signed and sealed by Michael R. Wenzel, P.E.
   (Submitted under NOA No. 09–0105.02)
5. Laboratory compliance letter for Test Report No.'s **FTL–3946** and **FTL–3995**, issued by Fenestration Testing Laboratory, Inc., dated 11/04 - 13/03, both signed and sealed by Edmundo Largaespada, P.E.
   (Submitted under NOA No 04–0120.01)

G. OTHERS

1. Notice of Acceptance No. **12–0321.02**, issued to T. M. Window, LLC, for their Series "805" Aluminum Horizontal Rolling Window – L.M.I., approved on 05/13/14 and expiring on 05/13/14.

Manuel Perez, P.E.
Product Control Examiner
NOA No. 14-0107.08
Expiration Date: May 13, 2019
Approval Date: February 20, 2014

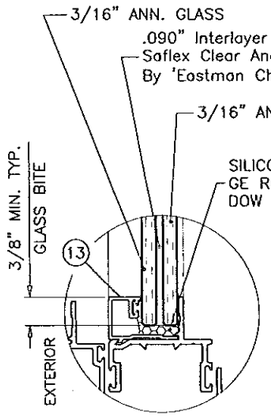

TYPE 'A'

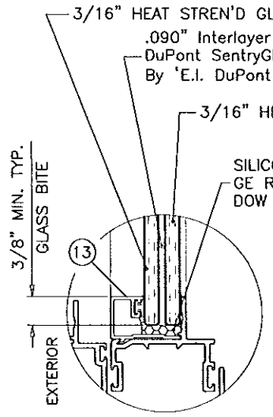

TYPE 'B'

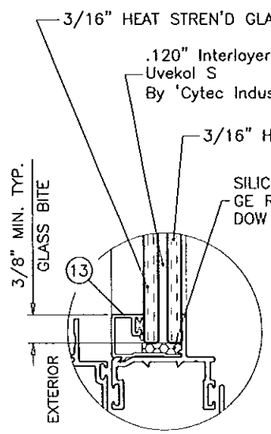

TYPE 'C'

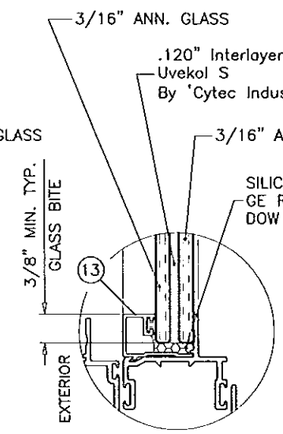

TYPE 'D'

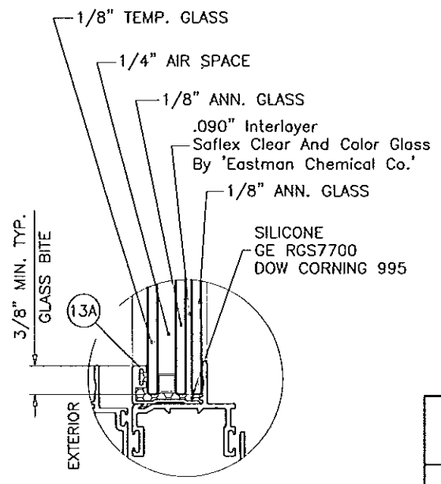

TYPE 'E'

GLAZING OPTIONS

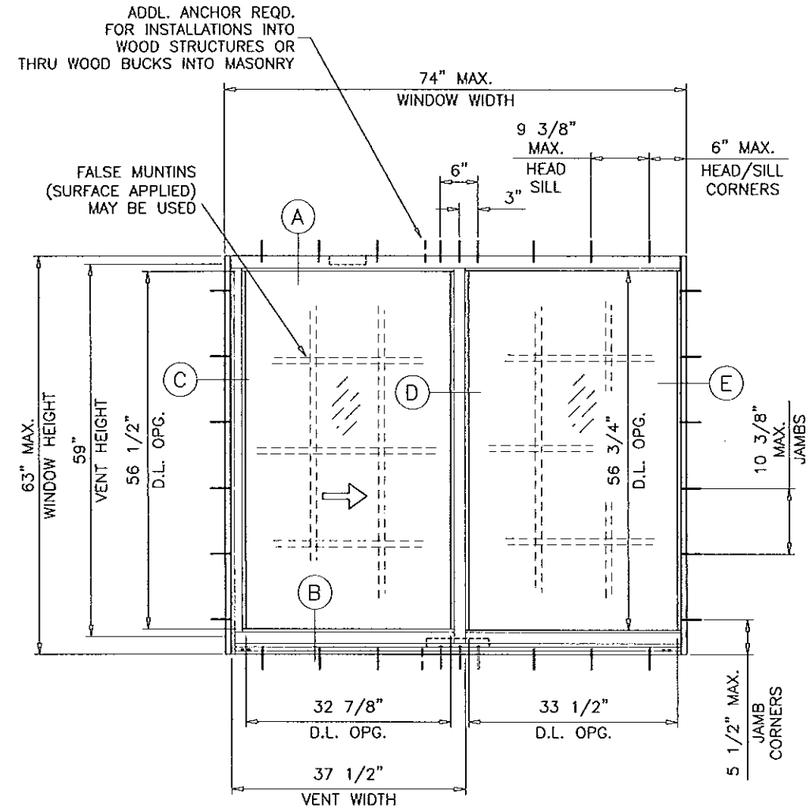

TYPICAL ELEVATION

XO OR OX SIZES

MAXIMUM DESIGN LOAD RATING - PSF

FOR SIZES SHOWN ABOVE OR SMALLER

GLASS TYPE 'A'		GLASS TYPE 'B'		GLASS TYPE 'C'		GLASS TYPE 'D'		GLASS TYPE 'E'	
EXT.(+)	INT.(-)	EXT.(+)	INT.(-)	EXT.(+)	INT.(-)	EXT.(+)	INT.(-)	EXT.(+)	INT.(-)
80.0	90.0	90.0	130.0	90.0	90.0	55.0	55.0	79.0	79.0

LOADS SHOWN ABOVE ARE FOR WINDOW VENTS WITH SPRING LOADED ALUMINUM LATCHES, FOR METALLIC SWEEP LATCHES LIMIT MAX. LOADS TO ±80.0 PSF.

NOTE:
GLASS CAPACITIES ON THIS SHEET ARE BASED ON ASTM E1300-09 (3 SEC. GUSTS) AND FLORIDA BUILDING COMMISSION DECLARATORY STATEMENT DCA05-DEC-219

THESE WINDOWS ARE RATED FOR LARGE & SMALL MISSILE IMPACT. SHUTTERS ARE NOT REQUIRED.

SERIES 805
ALUMINUM HORIZONTAL ROLLING WDW.

DESIGN LOAD RATINGS FOR THESE WINDOWS TO BE AS PER CHARTS SHOWN ON SHEETS 1 & 2.

APPROVAL APPLIES TO SINGLE UNITS OR SIDE BY SIDE COMBINATIONS OF H.R./H.R. OR HORIZONTAL ROLLING WITH OTHER MIAMI-DADE COUNTY APPR'D WINDOWS USING MIAMI-DADE COUNTY APPROVED MULLIONS IN BETWEEN.
LOWER DESIGN PRESSURE FROM WINDOWS OR MULLION APPROVAL WILL APPLY TO ENTIRE SYSTEM.

THIS PRODUCT HAS BEEN DESIGNED AND TESTED TO COMPLY WITH THE REQUIREMENTS OF THE FLORIDA BUILDING CODE INCLUDING HIGH VELOCITY HURRICANE ZONE (HVHZ).

WOOD BUCKS BY OTHERS, MUST BE ANCHORED PROPERLY TO TRANSFER LOADS TO THE STRUCTURE.

ANCHORS SHALL BE AS LISTED, SPACED AS SHOWN ON DETAILS, ANCHORS EMBEDMENT TO BASE MATERIAL SHALL BE BEYOND WALL DRESSING OR STUCCO.

ANCHORING OR LOADING CONDITIONS NOT SHOWN IN THESE DETAILS ARE NOT PART OF THIS APPROVAL.

A LOAD DURATION INCREASE IS USED IN DESIGN OF ANCHORS INTO WOOD ONLY.

MATERIALS INCLUDING BUT NOT LIMITED TO STEEL/METAL SCREWS, THAT COME INTO CONTACT WITH OTHER DISSIMILAR MATERIALS SHALL MEET THE REQUIREMENTS OF THE FLORIDA BLDG. CODE SECTION 2003.8.4.

Engr: JAVAD AHMAD
CIVIL
FLA. PE # 70592
C.A.N. 3538

NOV 21 2013

PRODUCT REVISED
as complying with the Florida Building Code
Acceptance No 14-0107.08
Expiration Date May 13, 2019
By Manuel Perez
Miami-Dade Product Control

AL-FAROOQ CORPORATION
ENGINEERS & PRODUCT DEVELOPMENT
1235 S.W. 87 AVE
MIAMI, FLORIDA 33174
TEL. (305) 264-8100 FAX. (305) 262-6978
COMP-ANL\W08-81TMW

SERIES 805 ALUM HORIZONTAL ROLLING WDW. (L.M.I.)

T.M. WINDOWS LLC.
601 N.W. 12TH AVE.
POMPANO BEACH, FL. 33069
TEL. (954) 781-4430 FAX. (954) 781-5078

revisions:

no	date	by	description
A	09.09.09		GENERAL REVISION
B	02.10.10		REV. PER BCCO COMMENTS
C	02.29.12		UPDATED TO 2010 FBC
D	11.15.13		INTERLAYER NAMES REV.

date: 09-19-08
scale: 1/2"=1'-0"
dr. by: HAMID
chk. by:

drawing no.
W08-81

sheet 1 of 7

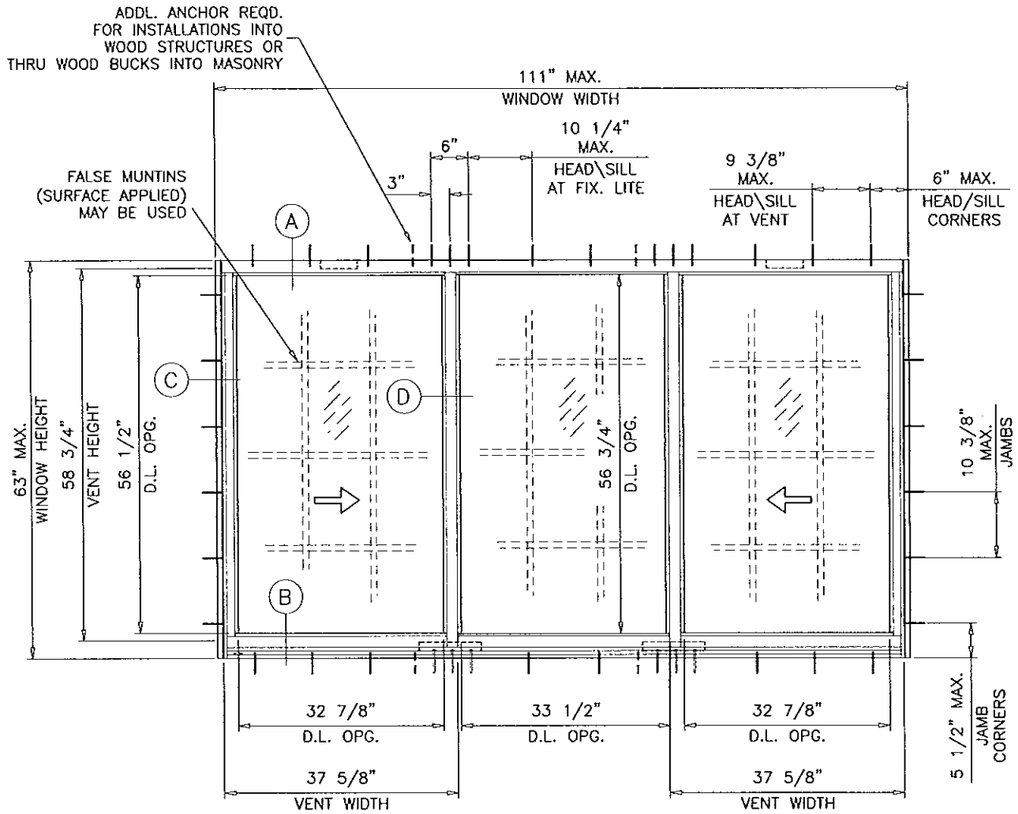

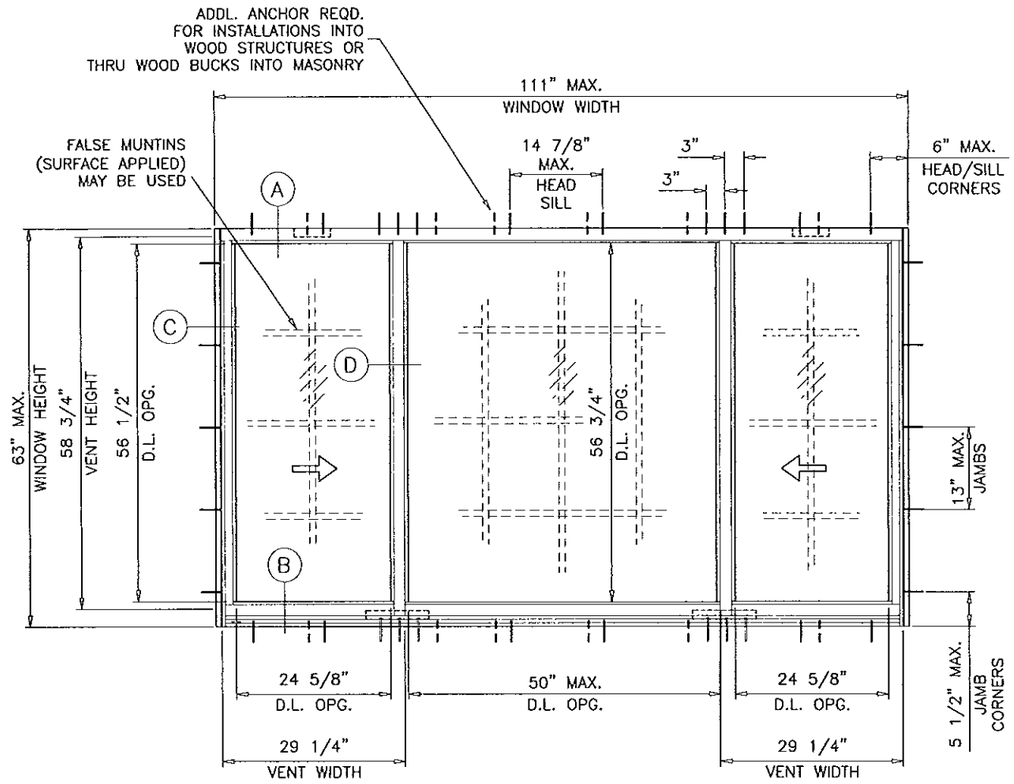

TYPICAL ELEVATIONS

XOX SIZES

MAXIMUM DESIGN LOAD RATING - PSF
FOR SIZES SHOWN ABOVE OR SMALLER

GLASS TYPE 'A'		GLASS TYPE 'B'		GLASS TYPE 'C'		GLASS TYPE 'E'	
EXT.(+)	INT.(-)	EXT.(+)	INT.(-)	EXT.(+)	INT.(-)	EXT.(+)	INT.(-)
80.0	90.0	90.0	130.0	90.0	90.0	79.0	79.0

LOADS SHOWN ABOVE ARE FOR WINDOW VENTS WITH SPRING LOADED ALUM LATCHES, FOR METALLIC SWEEP LATCHES LIMIT MAX. LOADS TO ±80.0 PSF.

XOX SIZES

MAXIMUM DESIGN LOAD RATING - PSF
FOR SIZES SHOWN ABOVE OR SMALLER

GLASS TYPE 'A'		GLASS TYPE 'B'	
EXT.(+)	INT.(-)	EXT.(+)	INT.(-)
80.0	90.0	90.0	130.0

LOADS SHOWN ABOVE ARE FOR WINDOW VENTS WITH SPRING LOADED ALUM LATCHES, FOR METALLIC SWEEP LATCHES LIMIT MAX. LOADS TO ±80.0 PSF.

NOTE:
GLASS CAPACITIES ON THIS SHEET ARE BASED ON ASTM E1300-09 (3 SEC. GUSTS) AND FLORIDA BUILDING COMMISSION DECLARATORY STATEMENT DCA05-DEC-219

Engr: JAVAD AHMAD
CIVIL
FLA. PE # 70592
C.A.N. 3538

NOV 21 2013

PRODUCT REVISED
as complying with the Florida Building Code
Acceptance No 14-0107.08
Expiration Date May 13, 2019
By Manuel Sera
Miami-Dade Product Control

AL-FAROOQ CORPORATION
ENGINEERS & PRODUCT DEVELOPMENT
1235 S.W. 87 AVE
MIAMI, FLORIDA 33174
TEL (305) 264-8100 FAX. (305) 262-6978

COMP-ANL\W08-81TMW

SERIES 805 ALUM HORIZONTAL ROLLING WDW. (L.M.I.)

T.M. WINDOWS LLC.
601 N.W. 12TH AVE.
POMPANO BEACH, FL. 33069
TEL. (954) 781-5078 FAX. (954) 781-4430

revisions:

no	date	by	description
A	09.09.09		GENERAL REVISION
B	02.10.10		REV. PER BCCO COMMENTS
C	02.29.12		UPDATED TO 2010 FBC
D	11.15.13		NO CHANGE THIS SHEET

date: 09-19-08
scale: 1/2" = 1"
dr. by: HAMID
chk. by:

drawing no.
W08-81

sheet 2 of 7

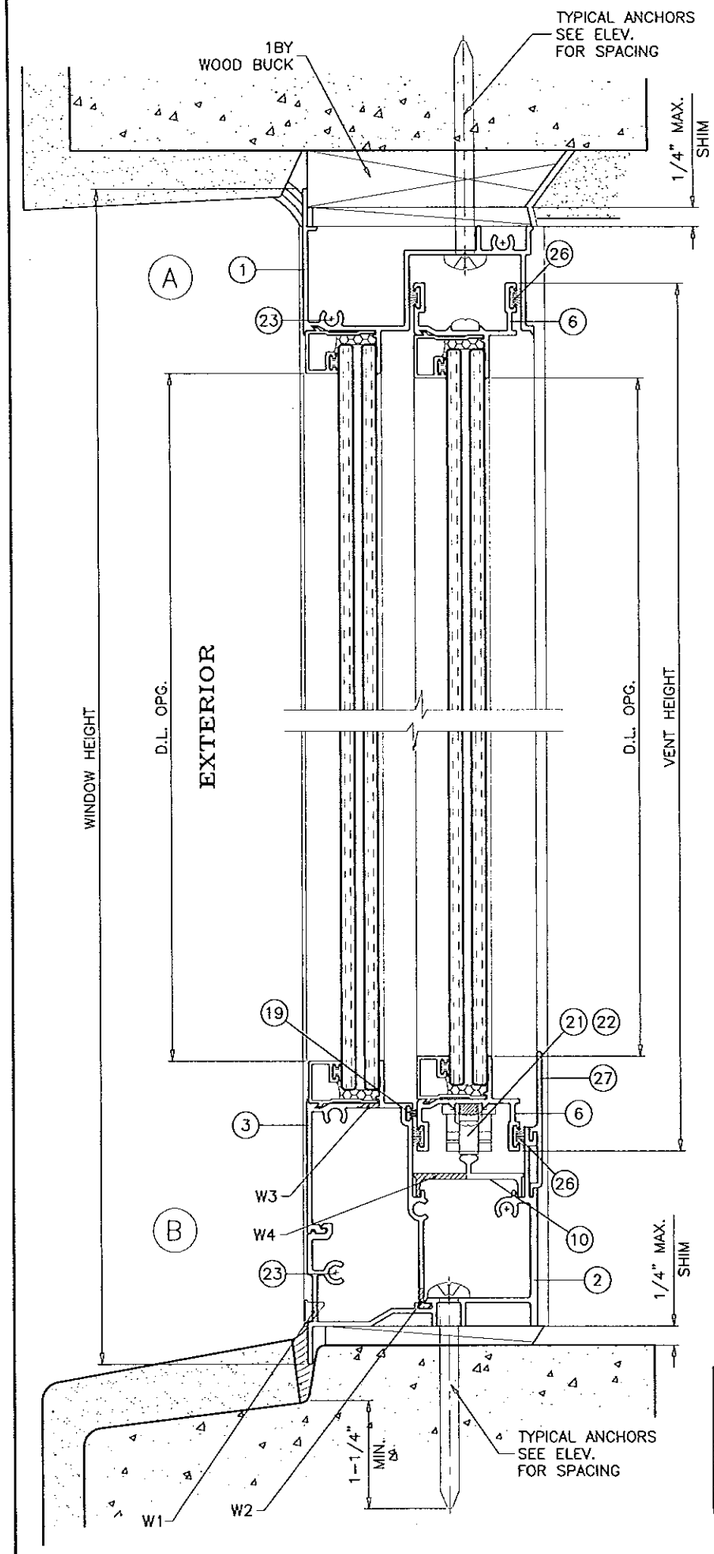

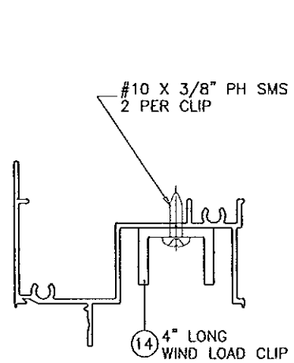

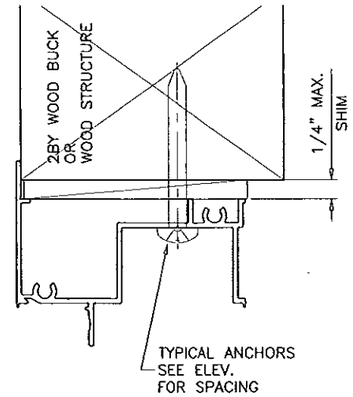

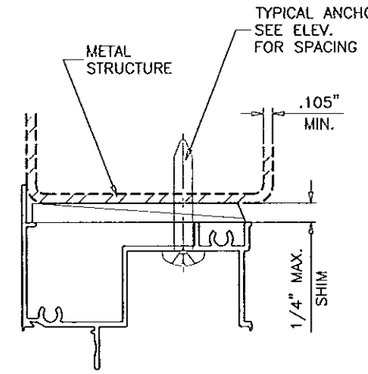

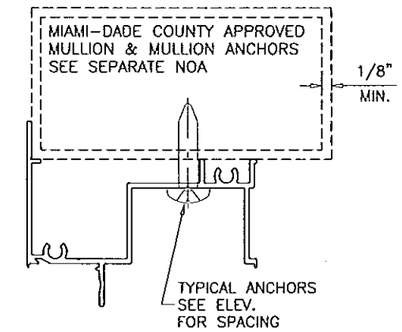

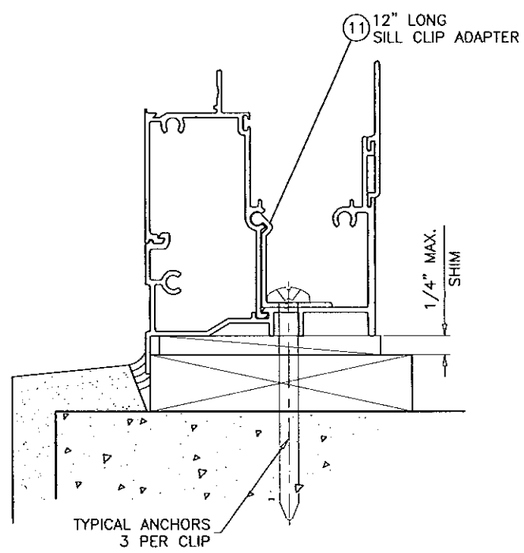

WOOD BUCKS AND METAL STRUCTURE NOT BY TM WINDOWS MUST SUSTAIN LOADS IMPOSED BY GLAZING SYSTEM AND TRANSFER THEM TO THE BUILDING STRUCTURE.

SEALANTS:

ALL FRAME AND VENT JOINTS AND CONNECTIONS SEALED WITH SILICONE OR ACRYLIC SEALANT.

WEEPHOLES:

W1 = 1-1/4" X 1/4" WEEPHOLES WITH PLASTIC BAFFLE AT 4-7/8" FROM EACH END AND AT MIDSPAN
W2 = 1-1/4" X 1/4" WEEPHOLES AT 4-7/8" FROM EACH END AND AT MIDSPAN
W3 = 2" LONG WEEP NOTCH AT EACH END
W4 = 1" LONG WEEP NOTCH AT 32" FROM EACH END

TYPICAL ANCHORS: SEE ELEV. FOR SPACING

1/4" DIA. ULTRACON BY 'ELCO' (Fu=177 KSI, Fy=155 KSI)

INTO 2BY WOOD BUCKS OR WOOD STRUCTURES
1-1/2" MIN. PENETRATION INTO WOOD

THRU 1BY BUCKS INTO CONC. OR MASONRY
1-1/4" MIN. EMBED INTO CONC. OR MASONRY

DIRECTLY INTO CONC. OR MASONRY
1-5/8" MIN. EMBED INTO CONC. OR MASONRY

1/4" TEKS OR SELF DRILLING SCREWS (GRADE 5 CRS)

INTO METAL STRUCTURES

STEEL : 0.105" MIN. (Fy = 36 KSI MIN.)
ALUMINUM : 1/8" THK. MIN. (6063-T5 MIN.)
(STEEL IN CONTACT WITH ALUMINUM TO BE PLATED OR PAINTED)

#14 SMS OR SELF DRILLING SCREWS (GRADE 2 CRS)

INTO MIAMI-DADE COUNTY APPROVED MULLIONS (MIN. THK. = 1/8")
(NO SHIM SPACE)

TYPICAL EDGE DISTANCE

INTO CONCRETE AND MASONRY = 2-1/2" MIN.
INTO WOOD STRUCTURE = 1" MIN.
INTO METAL STRUCTURE = 3/4" MIN.

CONCRETE AT HEAD, SILL OR JAMBS f'c = 3000 PSI MIN.
C-90 HOLLOW/FILLED BLOCK AT JAMBS f'm = 2000 PSI MIN.

Engr: JAVAD AHMAD
CIVIL
FLA. PE # 79592
C.A.N. 3538

NOV 2 1 2013

PRODUCT REVISED
as complying with the Florida Building Code
Acceptance No 14.0107.08
Expiration Date May 13, 2019
By Manuel Perez
Miami-Dade Product Control

AL-FAROOQ CORPORATION
ENGINEERS & PRODUCT DEVELOPMENT
1235 S.W. 87 AVE
MIAMI, FLORIDA 33174
TEL. (305) 264-8100 FAX. (305) 262-6978
COMP-ANL\W08-81TMW

SERIES 805 ALUM HORIZONTAL ROLLING WDW. (L.M.I.)

T.M. WINDOWS LLC.
601 N.W. 12TH AVE.
POMPANO BEACH, FL. 33069
TEL. (954) 781-5078 FAX. (954) 781-4430

revisions:

no	date	by	description
A	09.09.09		GENERAL REVISION
B	02.10.10		REV. PER BCCO COMMENTS
C	02.29.12		UPDATED TO 2010 FBC
D	11.15.13		NO CHANGE THIS SHEET

date: 09-19-08
scale: 1/2" = 1"
dr. by: HAMID
chk. by:

drawing no.
W08-81

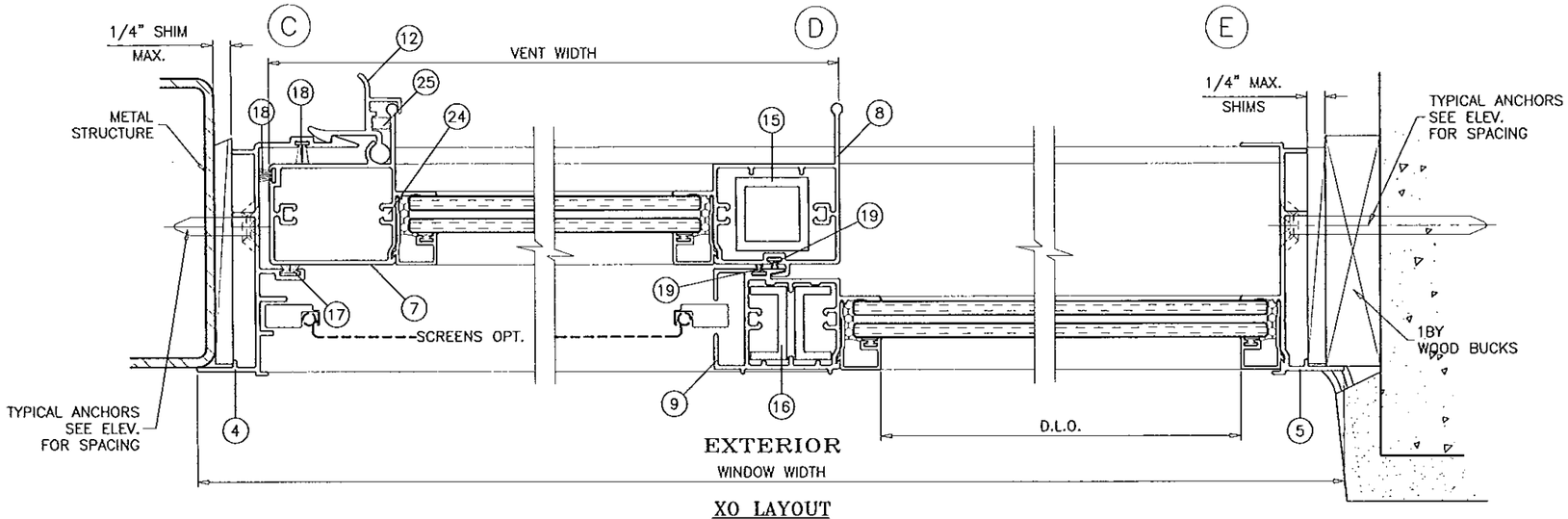

XO LAYOUT
OX OPPOSITE

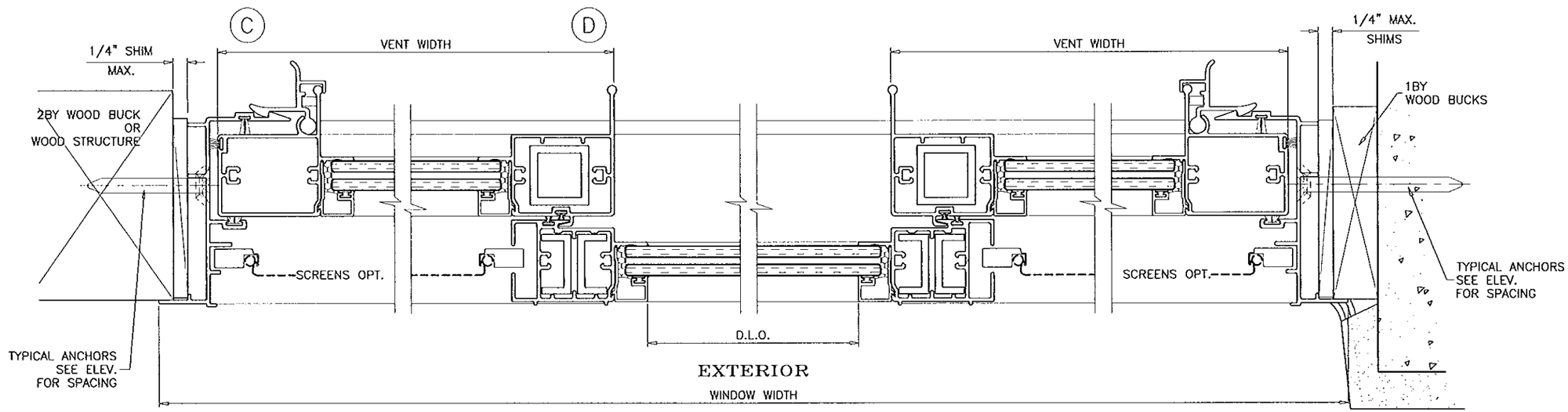

XOX LAYOUT

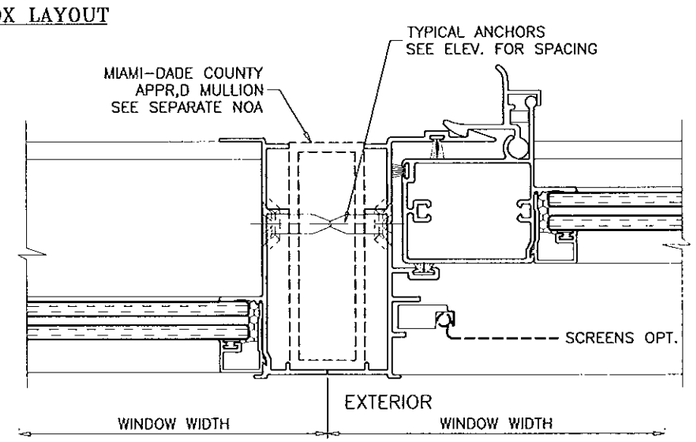

VENTS WITH
SPRING LOADED LATCHES

Engr: JAVAD AHMAD
CIVIL
FLA. PE # 70592
C.A.N. 3538

NOV 2 1 2013

PRODUCT REVISED
as complying with the Florida
Building Code
Acceptance No 14.0107.08
Expiration Date May 13, 2019
By Manuel Diaz
Miami Dade Product Control

AL-FAROOQ CORPORATION
ENGINEERS & PRODUCT DEVELOPMENT
1235 S.W. 87 AVE
MIAMI, FLORIDA 33174
TEL (305) 264-8100 FAX. (305) 262-6978

COMP-ANL\W08-81TMW

SERIES 805 ALUM HORIZONTAL ROLLING WDW. (L.M.I.)

T.M. WINDOWS LLC.
601 N.W. 12TH AVE.
POMPANO BEACH, FL. 33069
TEL. (954) 781-4430 FAX. (954) 781-5078

revisions:

no	date	by	description
A	09.09.09		GENERAL REVISION
B	02.10.10		REV. PER BCCO COMMENTS
C	02.29.12		NO CHANGE THIS SHEET
D	11.15.13		NO CHANGE THIS SHEET

date: 09-19-08
scale: 1/2" = 1"
dr. by: HAMID
chk. by:

drawing no.
W08-81

sheet 4 of 7

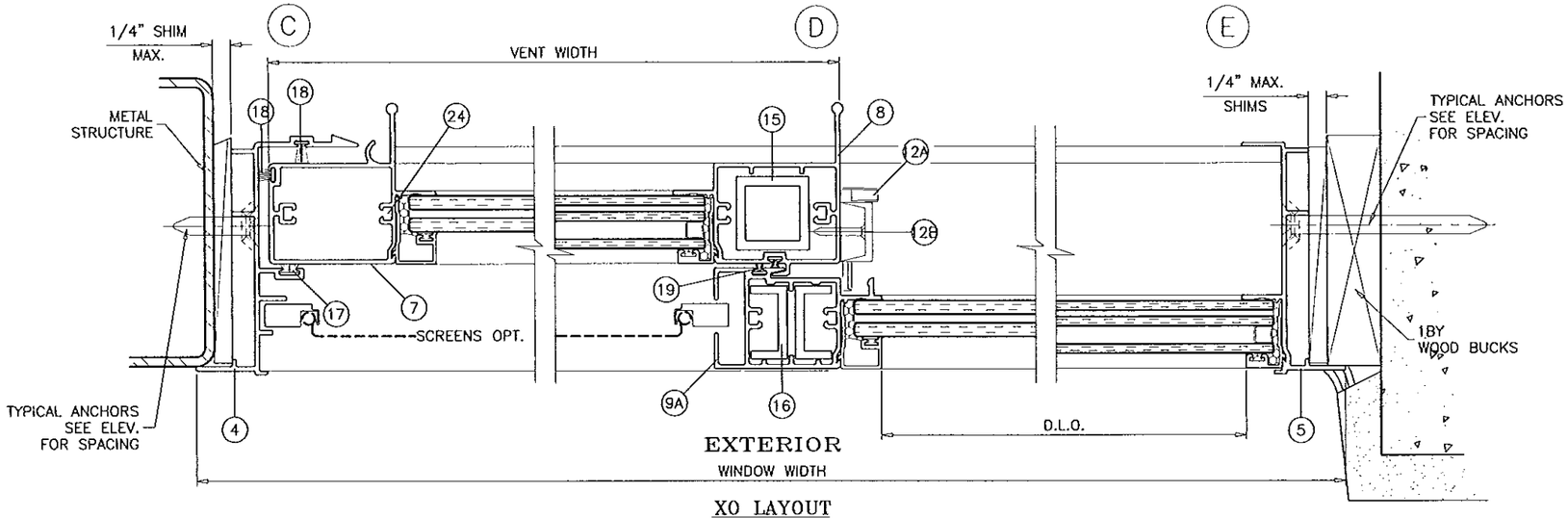

XO LAYOUT
OX OPPOSITE

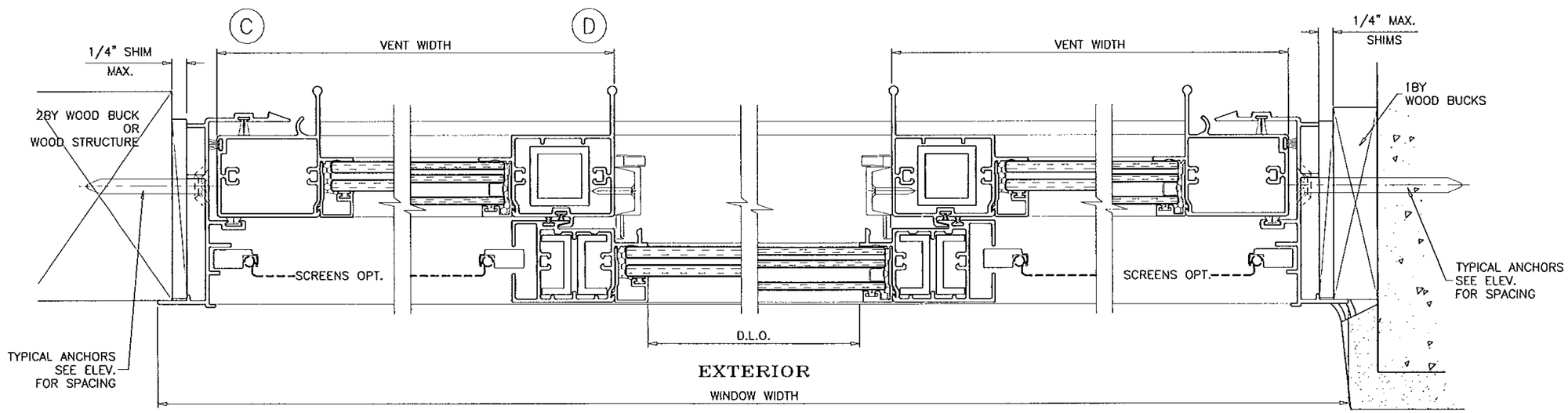

XOX LAYOUT

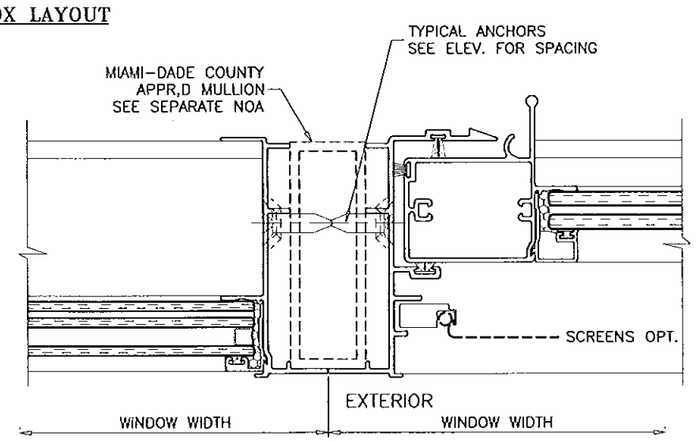

VENTS WITH
SWEEP LATCHES

Engr: JAVAD AHMAD
CIVIL
FLA. PE # 70592
C.A.N. 3538

NOV 21 2013

PRODUCT REVISED
as complying with the Florida
Building Code
Acceptance No M-0107.08
Expiration Date May 13, 2019
By Manuel Perez
Miami Dade Product Control

AL-FAROOQ CORPORATION
ENGINEERS & PRODUCT DEVELOPMENT
1235 S.W. 87 AVE
MIAMI, FLORIDA 33174
TEL. (305) 264-8100 FAX. (305) 262-6978
COMP-ANL\W08-81TMW

SERIES 805 ALUM HORIZONTAL ROLLING WDW. (L.M.I.)

T.M. WINDOWS LLC.
601 N.W. 12TH AVE.
POMPANO BEACH, FL. 33069
TEL. (954) 781-4430 FAX. (954) 781-5078

revisions:

no	date	by	description
A	09.09.09		GENERAL REVISION
B	02.10.10		REV. PER BCCO COMMENTS
C	02.29.12		NO CHANGE THIS SHEET
D	11.15.13		NO CHANGE THIS SHEET

date: 09-19-08
scale: 1/2" = 1"
dr. by: HAMID
chk. by:

drawing no.
W08-81

sheet 5 of 7

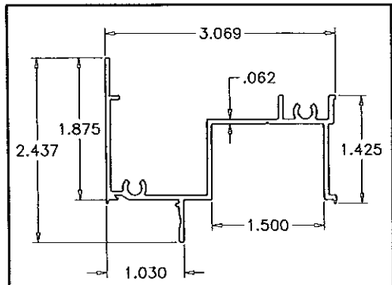

1 FRAME HEAD

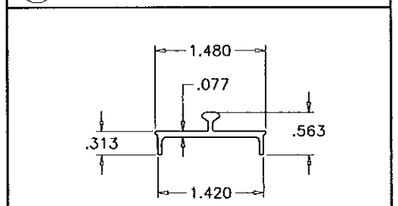

10 SILL TRACK

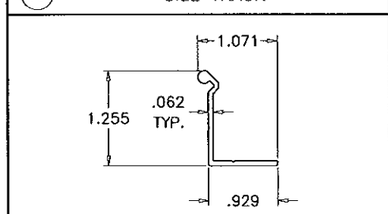

11 SILL CLIP ADAPTER

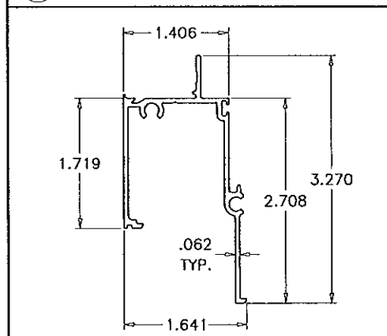

3 FRAME SILL TOP

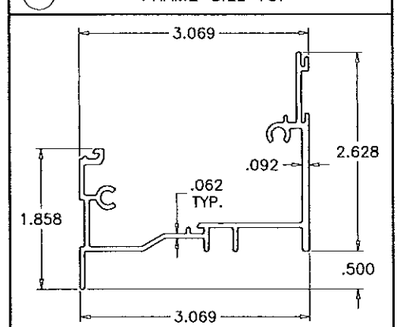

2 FRAME SILL BASE

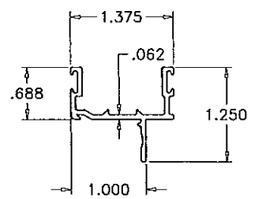

6 TOP & BOTTOM RAIL

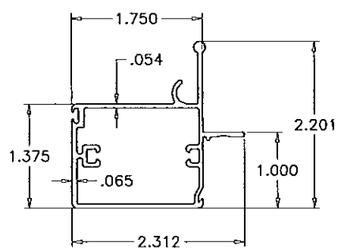

7 JAMB STILE

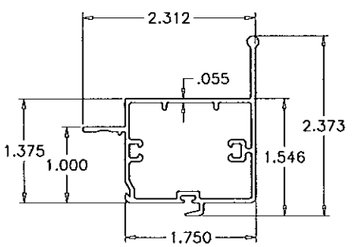

8 MEETING STILE

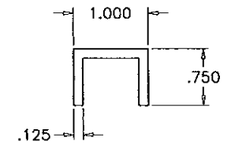

14 WIND LOAD CLIP

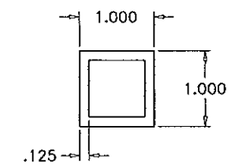

15 MTG. STILE REINF.

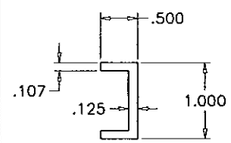

16 FIX. STILE REINF.

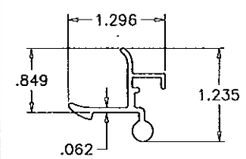

12 VENT LATCH

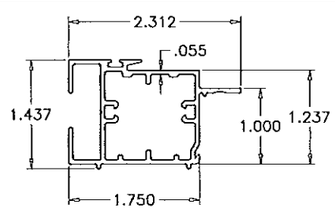

9 FIXED STILE (SPRING LATCH)

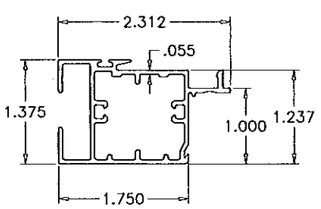

9A FIXED STILE (SWEEP LATCH)

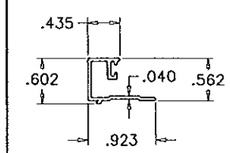

13 GLAZING BEAD (LAM. GLASS)

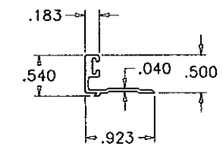

13A GLAZING BEAD (INSUL. LAM. GLASS)

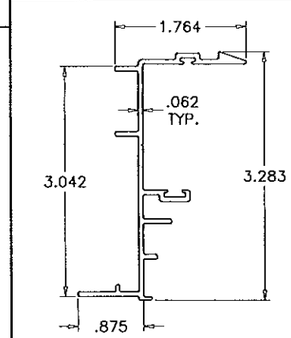

4 FRAME JAMB – VENT

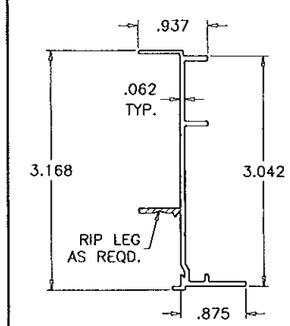

5 FRAME JAMB – FIXED

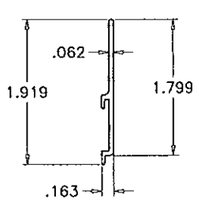

27 SILL RISER

ITEM	PART #	QUANTITY	DESCRIPTION	MATERIAL	MANF./SUPPLIER/REMARKS
1	TM-130	1	FRAME HEAD	6063-T6	–
2	TM-133B	1	FRAME SILL BASE	6063-T6	–
3	TM-134	1	FRAME SILL TOP	6063-T6	–
4	TM-132	AS REQD.	FRAME JAMB – VENT	6063-T6	–
5	TM-131A	AS REQD.	FRAME JAMB – FIXED	6063-T6	–
6	TM-138	2/ VENT	TOP AND BOTTOM RAIL	6063-T6	–
7	TM-139	1/ VENT	JAMB STILE	6063-T6	–
8	TM-140	1/ VENT	MEETING STILE	6063-T6	–
9	TM-137	1/ VENT	FIXED STILE (SPRING LOADED LATCH)	6063-T6	–
9A	TM-137A	1/ VENT	FIXED STILE (SWEEP LATCH)	6063-T6	–
10	TM-136	1	SILL TRACK INSERT	6063-T6	–
11	TM-135	1	SILL CLIP ADAPTER, 12" LONG	6063-T6	AT MTG. STILE LOCATION
12	TM-118	1/ VENT	SPRING LOADED VENT LATCH, 3-1/8" LONG	6063-T6	AT MID SPAN
12A	–	1/ VENT	METALLIC SWEEP LATCH	–	AT MID SPAN
12B	#8 X 3/4"	2/LATCH	SWEEP LATCH MOUNTING SCREWS	–	FH SMS
13	TM-141A	AS REQD.	GLAZING BEAD (LAMINATED GLASS)	6063-T6	–
13A	TM-181	AS REQD.	GLAZING BEAD (INSUL. LAM. GLASS)	6063-T6	–
14	TM-154	AS REQD.	WIND LOAD CLIP, 4" LONG	6063-T6	–
15	–	1/ STILE	MEETING STILE REINFORCING	6063-T6	–
16	–	2/ STILE	FIXED STILE REINFORCING	6063-T6	–
17	W31225	AS REQD.	FIN SEAL W'STRIPPING (.270" X .220" HIGH)	WOOL	–
18	W43371	AS REQD.	FIN SEAL W'STRIPPING (.187" X .370" HIGH)	WOOL	–
19	W43201	AS REQD.	FIN SEAL W'STRIPPING (.187" X .200" HIGH)	WOOL	–
20	P5043	–	ADHESIVE BACK CLOSED CELL FOAM	–	7/8" X 1/2" X 1-7/16" LONG
21	–	2/ VENT	VENT ROLLER HOUSING & GUIDE	PLASTIC	AT EACH END
22	–	–	VENT ROLLER/WHEEL	BRASS	–
23	#12 X 1"	2/ CORNER	FRAME ASSEMBLY SCREWS	–	P.H. PHILLIPS SMS
24	#10 X 1"	2/ CORNER	VENT ASSEMBLY SCREWS	–	P.H. PHILLIPS SMS
25	–	1/ LATCH	VENT LATCH SPRING	ST. STEEL	–
26	W31175	AS REQD.	FIN SEAL W'STRIPPING (.187" X .175" HIGH)	WOOL	–
27	TM-151	1	SILL RISER	6063-T6	–

Engr: JAVAD AHMAD
CIVIL
FLA. PE # 70592
C.A.N. 3538

NOV 21 2013

PRODUCT REVISED
as complying with the Florida
Building Code
Acceptance No 14-0107.08
Expiration Date May 13, 2019
By Manuel Perez
Miami Dade Product Control

AL-FAROOQ CORPORATION
ENGINEERS & PRODUCT DEVELOPMENT
1235 S.W. 87 AVE
MIAMI, FLORIDA 33174
TEL (305) 264-8100 FAX. (305) 262-6978
COMP-ANL\W08-81TMW

SERIES 805 ALUM HORIZONTAL ROLLING WDW. (L.M.I.)

T.M. WINDOWS LLC.
601 N.W. 12TH AVE.
POMPANO BEACH, FL. 33069
TEL. (954) 781-4430 FAX. (954) 781-5078

revisions:

no	date	by	description
A	09.09.09		GENERAL REVISION
B	02.10.10		NO CHANGE THIS SHEET
C	02.29.12		NO CHANGE THIS SHEET
D	11.15.13		NO CHANGE THIS SHEET

date: 09-19-08
scale: 1/2" = 1"
dr. by: HAMID
chk. by:

drawing no.
W08-81

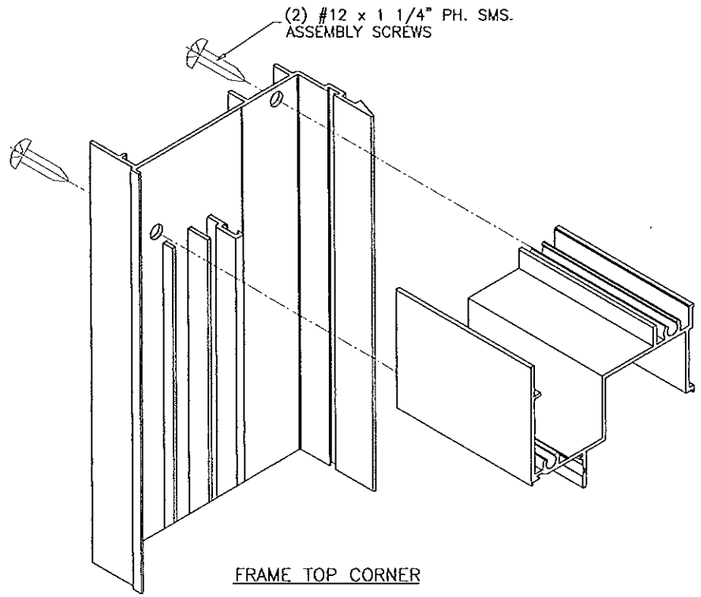

FRAME TOP CORNER

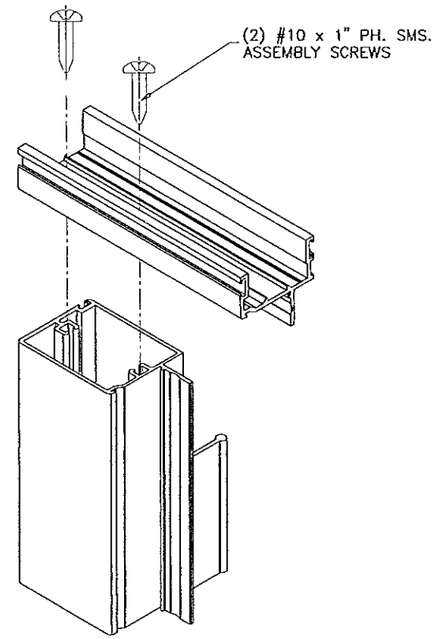

VENT TOP CORNER

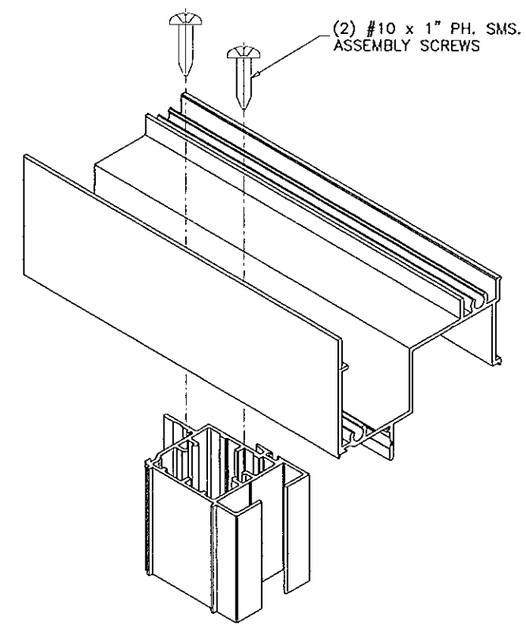

FIXED MTG. RAIL TOP CORNER

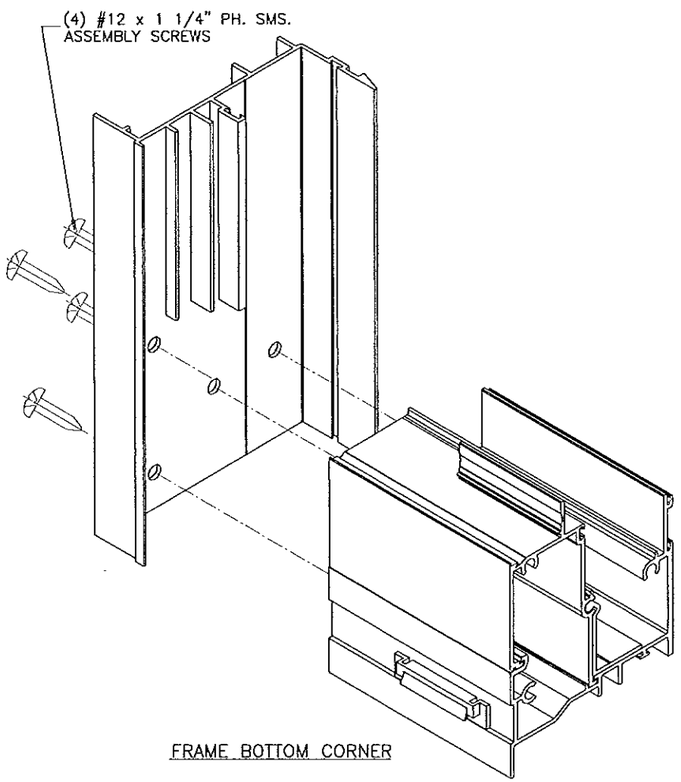

FRAME BOTTOM CORNER

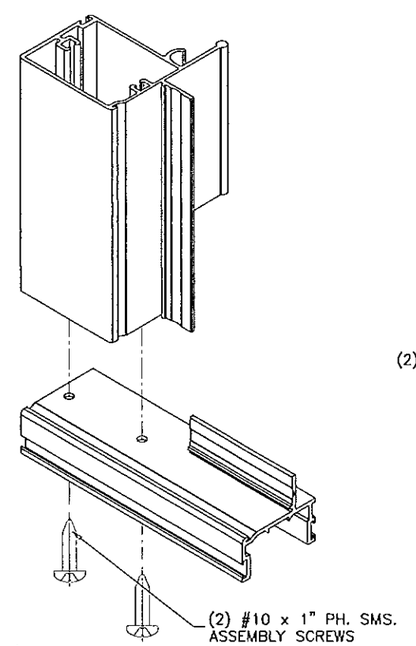

VENT BOTTOM CORNER

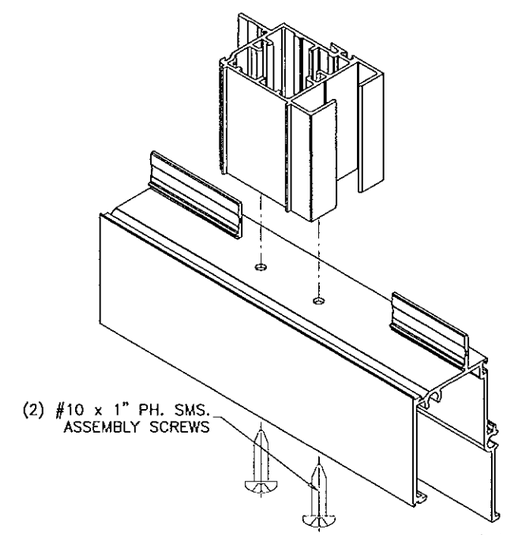

FIXED MTG. RAIL BOTTOM CORNER

Engr: JAVAD AHMAD
CIVIL
FLA. PE # 70592
C.A.N. 3538

NOV 2 1 2013

PRODUCT REVISED
as complying with the Florida
Building Code
Acceptance No 14-0107.08
Expiration Date May 13, 2019
By Manuel Perez
Miami-Dade Product Control

AL-FAROOQ CORPORATION
ENGINEERS & PRODUCT DEVELOPMENT
1235 S.W. 87 AVE
MIAMI, FLORIDA 33174
TEL (305) 264-8100 FAX. (305) 262-6978
COMP-ANL\W08-81TMW

SERIES 805 ALUM HORIZONTAL ROLLING WDW. (L.M.I.)

T.M. WINDOWS LLC.
601 N.W. 12TH AVE.
POMPANO BEACH, FL. 33069
TEL. (954) 781-4430 FAX. (954) 781-5078

revisions:

no	date	by	description
A	09.09.09		GENERAL REVISION
B	02.10.10		NO CHANGE THIS SHEET
C	02.29.12		NO CHANGE THIS SHEET
D	11.15.13		NO CHANGE THIS SHEET

date: 09-19-08
scale: 1/2" = 1"
dr. by: HAMID
chk. by:

drawing no.
W08-81

sheet 7 of 7