MIAMI-DADE COUNTY
PRODUCT CONTROL SECTION
11805 SW 26 Street, Room 208
Miami, Florida 33175-2474
T (786) 315-2590 F (786) 315-2599
www.miamidade.gov/economy

DEPARTMENT OF REGULATORY AND ECONOMIC RESOURCES (RER)
BOARD AND CODE ADMINISTRATION DIVISION

NOTICE OF ACCEPTANCE (NOA)

PGT Industries
1070 Technology Drive,
Nokomis, Fl. 34275

SCOPE:

This NOA is being issued under the applicable rules and regulations governing the use of construction materials. The documentation submitted has been reviewed and accepted by Miami-Dade County PERA -Product Control Section to be used in Miami Dade County and other areas where allowed by the Authority Having Jurisdiction (AHJ).

This NOA shall not be valid after the expiration date stated below. The Miami-Dade County Product Control Section (In Miami Dade County) and/or the AHJ (in areas other than Miami Dade County) reserve the right to have this product or material tested for quality assurance purposes. If this product or material fails to perform in the accepted manner, the manufacturer will incur the expense of such testing and the AHJ may immediately revoke, modify, or suspend the use of such product or material within their jurisdiction. PERA reserves the right to revoke this acceptance, if it is determined by Miami-Dade County Product Control Section that this product or material fails to meet the requirements of the applicable building code.

This product is approved as described herein, and has been designed to comply with the Florida Building Code, including the High Velocity Hurricane Zone.

DESCRIPTION: Series "SGD-670" Aluminum Sliding Glass Doors w/ 90^0 & 135^0 corners -NI

APPROVAL DOCUMENT: Drawing No. **PGT0128** (former **PGT0001 Rev C**), titled "Series 670 H.P. Alum SGD-Non-Impact", sheets 1 through 22 of 22, prepared by manufacturer, dated 02-02-14 and last revised on 01/30/15, signed and sealed by Lynn Miller, P.E., bearing the Miami-Dade County Product Control Revision stamp with the Notice of Acceptance number and expiration date by the Miami-Dade County Product Control Section.

MISSILE IMPACT RATING: None: Approved Hurricane Protection devices, complying w/ FBC, as applicable are required.

Limitations:

1. Max eight (8) panels configuration unit is allowed, having max nominal panel size not to exceed tested height & width per tables 1 thru 3. See sheets 6, 7 and 8 for Design Pressures (DP), glass types, Sill type for Positive DP limits, applicable Standard or Heavy Duty parts and anchorage requirements. See sheet 10 for straight configured units and sheet 11 for corner units. Pockets & Egress requirements to be reviewed by Building official.

LABELING: Each unit shall bear a permanent label with the manufacturer's name or logo, city, state and series and following statement: "Miami-Dade County Product Control Approved", unless otherwise noted herein.

RENEWAL of this NOA shall be considered after a renewal application has been filed and there has been no change in the applicable building code negatively affecting the performance of this product.

TERMINATION of this NOA will occur after the expiration date or if there has been a revision or change in the materials, use, and/or manufacture of the product or process. Misuse of this NOA as an endorsement of any product, for sales, advertising or any other purposes shall automatically terminate this NOA. Failure to comply with any section of this NOA shall be cause for termination and removal of NOA.

ADVERTISEMENT: The NOA number preceded by the words Miami-Dade County, Florida, and followed by the expiration date may be displayed in advertising literature. If any portion of the NOA is displayed, then it shall be done in its entirety.

INSPECTION: A copy of this entire NOA shall be provided to the user by the manufacturer or its distributors and shall be available for inspection at the job site at the request of the Building Official.

This NOA **revises & renews NOA # 11-1018.17** and consists of this page 1 and evidence page E-1, as well as approval document mentioned above.

The submitted documentation was reviewed by **Ishaq I. Chanda, P.E.**

MIAMI-DADE COUNTY APPROVED

2/12/15

NOTICE OF ACCEPTANCE: EVIDENCE SUBMITTED

A. DRAWINGS

1. Manufacturer's die drawings and sections
2. Drawing No. **PGT0128** (former **PGT0001 Rev C**), titled "Series 670 H.P. Alum SGD-Non-Impact", sheets 1 through 22 of 22, prepared by manufacturer, dated 02-02-14 and last revised on 01/30/15, signed and sealed by Lynn Miller, P.E.

B. TESTS

1. Test report on 1) Air Infiltration Test, per FBC, TAS 202-94
   2) Uniform Static Air Pressure Test, per FBC, TAS 202-94
   3) Water Resistance Test, per FBC, TAS 202-94.
   4) Forced Entry Test, per FBC 2411.3.2.1 (b) and TAS 202-94

Along with marked-up drawings and installation diagram of Aluminum Sliding Glass Doors, prepared by Fenestration Testing Laboratory, Inc., Test Reports No(s) **FTL-5979, FTL-5980, FTL-5994, FTL-6002, FTL-6034** & **FTL-6035**, dated 08/10/09, all signed & sealed by Julio Gonzales, P.E. (All above test reports submitted under files **# 11-1018.17/#09-0826.13**)

2. Reference Test reports on 1) Air Infiltration Test, per FBC, TAS 202-94
   2) Uniform Static Air Pressure Test, per FBC, TAS 202-94
   3) Water Resistance Test, per FBC, TAS 202-94.
   4) Large Missile Impact Test per FBC, TAS 201-94
   5) Cyclic Wind Pressure Loading per FBC, TAS 203-94
   6) Forced Entry Test, per FBC 2411.3.2.1 (b) and TAS 202-94

Along w/ marked-up drawings and installation diagram of Aluminum Sliding Glass Doors, prepared by Fenestration Testing Laboratory, Inc., Test Reports No**FTL-7554**, dated 11/01/13, signed & sealed by Marlin D. Brinson, P.E (This file has addendum letter dated 08/14/14 & marked-up drawings dated 08/19/14 and revised interior astragal marked-up Dwgs dated 11-11-13, all issued by Fenestration Testing lab.)

3. Additional reference supporting test # **FTL 5254, FTL 5980, FTL 5987** and **ATI72138.01-401-18**.

C. CALCULATIONS

1. Anchor verification and comparative analysis dated 03/18/14, 06/25/14 and last revised on 01/30/15, sheets 1 thru 67, prepared by PGT, signed and sealed by Lynn Miller, P. E.
2. Glazing complies with ASTME-1300-02, -04 & -09.

D. QUALITY ASSURANCE

1. Miami Dade Department of Regulatory and Economic Resources (RER).

E. MATERIAL CERTIFICATIONS

1 None.

F. STATEMENTS

1. Statement letter dated 06/25/14 of compliance to FBC 2014 (5th Edition) and "No financial interest", prepared by PGT, signed & sealed by Lynn Miller, P.E.
2. Letter of lab compliance, part of the above test reports.

G. OTHER

1. This NOA **revises & renews # 11-1018.17**, expiring April 07, 2015.
2. AAMA's Technical Paper for SGD & Bi-fold doors referenced to FBC 2014 (5th edition).
3. Test proposal dated 6/4/13 & 08/12/13 approved by Jaime Gascon, P.E.
4. Test proposals No(s) **09-0177, 0177-A, B** & **C** approved by BCCO.
4. Letter of commitment dated February 20, 2014, issued by PGT, signed by A. Lynn Miller, P.E.

Ishaq I. Chanda

Ishaq I. Chanda, P.E.
Product Control Examiner
NOA No. 14-0123.11
Expiration Date: April 07, 2020
Approval Date: February 19, 2015

SERIES 670, NON-IMPACT RESISTANT SLIDING GLASS DOOR INCLUDING POCKETS & 90°/135° CORNERS

GENERAL NOTES

1) GLAZING TYPE OPTIONS: SEE TABLE B, THIS SHEET & GLAZING DETAILS ON SHEETS 4 & 5.
2) DESIGN PRESSURES:
A. NEGATIVE DESIGN LOADS BASED ON TESTED PRESSURE AND GLASS TABLES ASTM E1300.
B. POSITIVE DESIGN LOADS BASED ON WATER TEST PRESSURE AND GLASS TABLES ASTM E1300.
3) ANCHORAGE: THE 33-1/3% STRESS INCREASE HAS NOT BEEN USED IN THE DESIGN OF THIS PRODUCT. MATERIALS, INCLUDING BUT NOT LIMITED TO STEEL SCREWS, THAT COME INTO CONTACT WITH OTHER DISSIMILAR MATERIALS SHALL MEET THE REQUIREMENTS OF THE CURRENT FLORIDA BUILDING CODE. FOR ANCHORAGE DETAILS SEE SHEETS 6-14.
4) SHUTTERS ARE REQUIRED PER FBC REQUIREMENTS, AS APPLICABLE.
5) INSTALLATION SCREWS, FRAME SPLICES, FRAME AND PANEL CORNERS TO BE SEALED WITH NARROW JOINT SEALANT.
6) REFERENCES: ELCO ULTRACON, CRETEFLEX AND AGGREGATOR NOA'S, ANSI/AF&PA NDS FOR WOOD CONSTRUCTION AND ADM, ALUMINUM DESIGN MANUAL.
7) THIS PRODUCT HAS BEEN DESIGNED & TESTED TO COMPLY WITH THE REQUIREMENTS OF THE CURRENT FLORIDA BUILDING CODE, INCLUDING THE HIGH VELOCITY HURRICANE ZONE (HVHZ).
8) DOOR SIZES MUST BE VERIFIED FOR COMPLIANCE WITH EGRESS REQUIREMENTS PER CURRENT FLORIDA BUILDING CODE, AS APPLICABLE.

TEST REPORTS: FTL-5254, FTL-5979, FTL-5980, FTL-5987, FTL-5994, FTL-6002, FTL-6034, FTL-6035, FTL-7554 AND ATI 72138.01-1401-18

TABLE A:

Group	Anchor	Substrate	Frame Member	Min. Edge Distance**	Min. Embedment
1	1/4" Elco Ultracon	Concrete (min. 2.85 ksi)	Head/Sill/Jamb	1"	1-3/8"
		Ungrouted CMU, (ASTM C-90)	Jamb only	2-1/2"	1-1/4"
		Grouted CMU (ASTM C-90, min. 2 ksi grout)	Jamb only	2-1/2"	1-3/4"
2	1/4" Elco 410 S.S. CreteFlex	Concrete (min. 3.35 ksi)	Head/Sill/Jamb	1"	1-3/4"
		Ungrouted CMU, (ASTM C-90)	Jamb only	2-1/2"	1-1/4"
		P.T. Southern Pine (SG=0.55)	Head/Sill/Jamb	1"	1.395"
3	1/4" Elco Ultracon	Concrete (min. 2.85 ksi)	Head/Sill	1"	1-3/8"
		Ungrouted CMU (ASTM C-90)	Jamb only	1"	1-1/4"
	#12, 18-8 or 410 S.S. SMS, (min. 11 threads/in)	P.T. Southern Pine (SG=0.55)	Head/Sill/Jamb	9/16"	1-3/8"
		Aluminum, 6063-T5*	Head/Sill/Jamb	3/8"	0.063"
		Steel, A36*	Head/Sill/Jamb	3/8"	0.050"
		Steel Stud, A653 Gr. 33*	Head/Sill/Jamb	3/8"	0.0451"
	1/4" Elco 18-8 S.S. Aggre-Gator	Concrete (min. 3.275 ksi)	Head/Sill/Jamb	1-1/2"	1-3/8"
		Ungrouted CMU, (ASTM C-90)	Jamb only	2"	1-1/4"
		Grouted CMU (ASTM C-90, min. 2 ksi grout)	Jamb only	2"	2"
		P.T. Southern Pine (SG=0.55)	Head/Sill/Jamb	1"	1-3/8"
4	#12, Steel SMS G5, (min. 11 threads/in)	P.T. Southern Pine (SG=0.55)	Head/Sill/Jamb	9/16"	1-3/8"
		Aluminum, 6063-T5*	Head/Sill/Jamb	3/8"	0.063"
		Steel, A36*	Head/Sill/Jamb	3/8"	0.050"
		Steel Stud, A653 Gr. 33*	Head/Sill/Jamb	3/8"	0.0451"

* MIN. OF 3 THREADS BEYOND THE METAL SUBSTRATE. METAL SUBSTRATE TO MEET MIN. STRENGTH AND THICKNESS REQUIREMENTS PER CURRENT FLORIDA BUILDING CODE AND TO BE REVIEWED BY THE AUTHORITY HAVING JURISDICTION.
**P-HOOK INSTALLATION REQUIRES 2.693" MIN. EDGE DISTANCE, REFER TO SHEET 14 FOR ALL SPECIFIC P-HOOK REQUIREMENTS.

ANCHOR NOTES

1) FOR CONCRETE/CMU SUBSTRATE APPLICATIONS IN MIAMI-DADE COUNTY, USE ONLY MIAMI-DADE COUNTY APPROVED ELCO ANCHORS. SEE TABLE A ON THIS SHEET FOR EMBEDMENT, EDGE DISTANCE AND SUBSTRATE REQUIREMENTS.
2) FOR OTHER SUBSTRATE APPLICATIONS SEE TABLE ON THIS SHEET.
3) WOOD BUCKS DEPICTED AS 1X ARE LESS THAN 1-1/2" THICK. PROPERLY SECURED, 1X WOOD BUCKS ARE OPTIONAL IF UNIT IS INSTALLED DIRECTLY TO SOLID CONCRETE. WOOD BUCKS DEPICTED AS 2X ARE 1-1/2" THICK OR GREATER. 1X AND 2X BUCKS (WHEN USED) SHALL BE DESIGNED TO PROPERLY TRANSFER LOADS TO THE STRUCTURE. BUCK DESIGN AND INSTALLATION IS THE RESPONSIBILITY OF THE ENGINEER OR ARCHITECT OF RECORD & TO BE REVIEWED BY THE BUILDING OFFICIAL.
4) METAL SUBSTRATE TO MEET MIN. STRENGTH AND THICKNESS REQUIREMENTS PER CURRENT FLORIDA BUILDING CODE AND TO BE REVIEWED BY THE AUTHORITY HAVING JURISDICTION.
5) IF SILL IS TIGHT TO SUBSTRATE, GROUT OR OTHER MATERIAL IS NOT REQUIRED. IF USED, NON-SHRINK, NON-METALLIC GROUT, MAX. 1/4" THICK & 3400 PSI MIN., (DONE BY OTHERS) MUST FULLY SUPPORT THE ENTIRE LENGTH OF THE SILL THAT IS NOT TIGHT TO THE SUBSTRATE, AND TRANSFER SHEAR LOAD TO SUBSTRATE. IF SUBSTRATE IS WOOD, 30# FELT PAPER OR MASTIC IS REQUIRED BETWEEN THE GROUT AND WOOD SUBSTRATE, OR AS APPROVED BY THE AUTHORITY HAVING JURISDICTION.

NOA DRAWING MAP

	SHEET
GENERAL NOTES	1
EXAMPLE CONFIGS	2-3
GLAZING DETAILS	4,5
ANCHORAGE	6-14
DESIGN PRESSURES	6-8
INSTALL DETAILS	12-14
ELEVATIONS	15,16
PANEL / SILL TYPES	17
CROSS SECTIONS	18,19
PARTS LIST	20
EXTRUSIONS	21,22

PRODUCT REVISED
as complying with the Florida
Building Code
Acceptance No. 14-0123.11
Expiration Date APR 07, 2020
By [signature]
Miami Dade Product Control

TABLE B, SEE DETAILS ON SHEETS 4 & 5:

Glass Type	Description (Listed from Exterior to Interior)
G1	3/16" TEMPERED GLASS
G1A	1/4" TEMPERED GLASS
G2	1" I.G.: 3/16" TEMPERED GLASS + 5/8" AIRSPACE + 3/16" TEMPERED GLASS
G2A	1" I.G.: 1/4" TEMPERED GLASS + 1/2" AIRSPACE + 1/4" TEMPERED GLASS

DESIGN PRESSURE RATING	IMPACT RATING
SEE TABLES 1, 2 & 3 ON SHEETS 6, 7 & 8	NOT RATED FOR MISSILE IMPACT RESISTANCE

ANTHONY LYNN MILLER
LICENSE
No. 58705
STATE OF FLORIDA
PROFESSIONAL ENGINEER
A. LYNN MILLER P.E.
P.E.# 58705

Revsd By:	Date:	Revisions:	
Revsd By:	Date:	Revisions:	
Revsd By:	Date:	Revisions:	
Drawn By: JR	Date: 02/20/14	Checked By:	Date:

1070 TECHNOLOGY DRIVE
N. VENICE, FL 34275
(941)-480-1600
CERT. OF AUTH. #29296

PGT®

Description: GENERAL NOTES AND MAP
Title: SERIES 670 ALUM. SGD - NON-IMPACT

Series/Model:	Scale:	Sheet:	Drawing No.	Rev:
SGD-670	NTS	1 of 22	PGT0128	

EXAMPLE CONFIGURATIONS

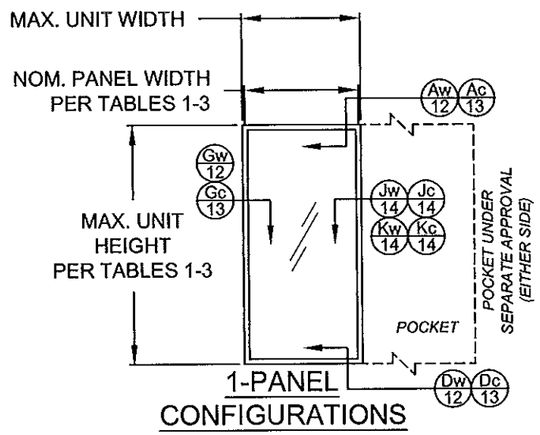

1-PANEL CONFIGURATIONS

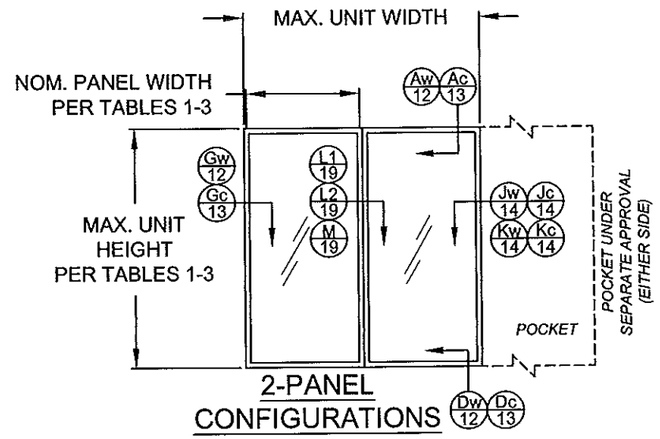

2-PANEL CONFIGURATIONS

CONFIGURATIONS NOTES:

1) ALL CONFIGURATIONS SHOWN ARE ALSO AVAILABLE AS POCKET CONFIGURATIONS AT EITHER OR BOTH JAMB LOCATIONS USING DETAIL "Jw", "Jc", "Kw" OR "Kc" INSTALLATION. EXAMPLE: 4-PANEL XXXX IN POCKET (p) CONFIGURATION CAN BE pXXXXp, pXXXX OR XXXXp. OXXX IN POCKET CONFIGURATION CAN BE OXXXp.

2) 90° & 135° CORNER CONFIGURATIONS CAN BE A COMBINATION OF ANY 2 STRAIGHT CONFIGURATIONS.

3) FOR NOM. PANEL WIDTH, SEE TABLES 1-3.

"X" = OPERABLE PANEL,
"O" = INOPERABLE PANEL,
"p" = POCKET

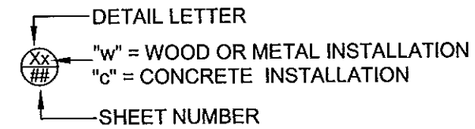

DLO WIDTH = NOM. PANEL WIDTH - 7"
DLO HEIGHT = DOOR UNIT HEIGHT - 10.125"
PANEL HEIGHT = DOOR UNIT HEIGHT - 1.866"

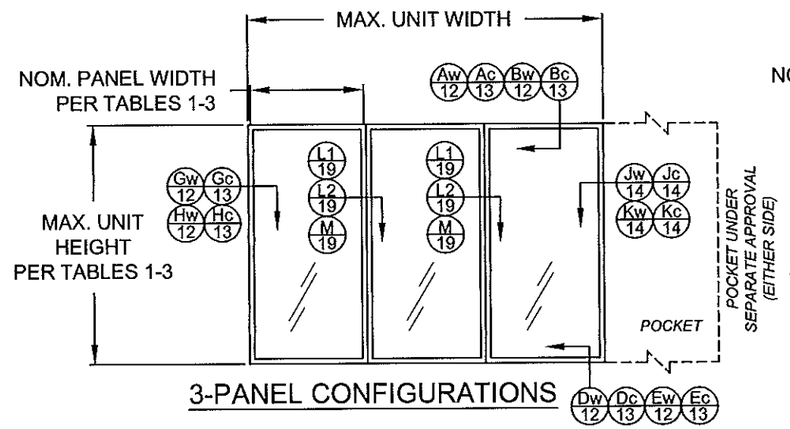

3-PANEL CONFIGURATIONS

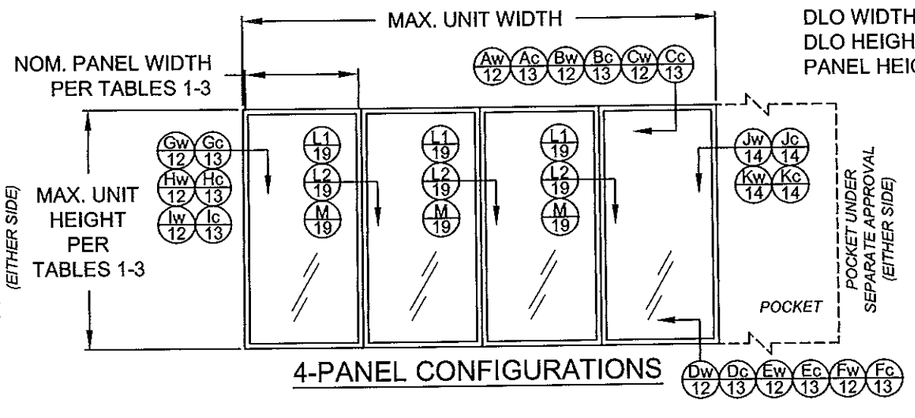

4-PANEL CONFIGURATIONS

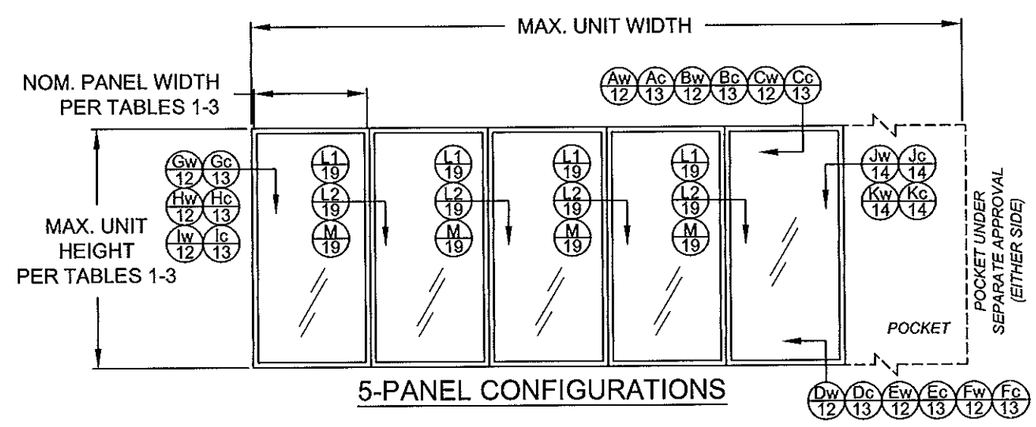

5-PANEL CONFIGURATIONS

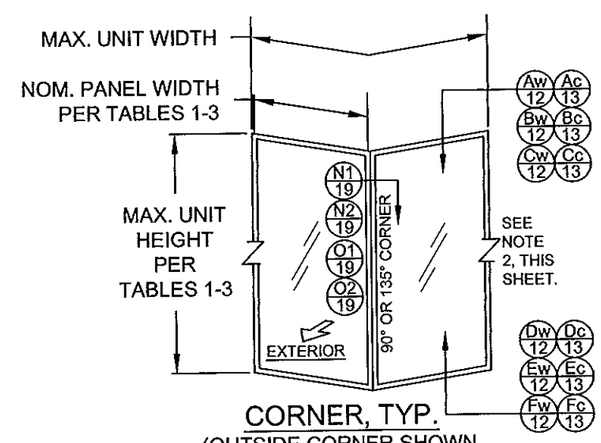

CORNER, TYP.
(OUTSIDE CORNER SHOWN, INSIDE CORNER SIMILAR)

PRODUCT REVISED
as complying with the Florida Building Code
Acceptance No. 14-0123.11
Expiration Date 4/7/20
By [signature]
Miami Dade Product Control

ANTHONY LYNN MILLER
LICENSE
No. 58705
1/30/15
STATE OF FLORIDA
PROFESSIONAL ENGINEER
A. LYNN MILLER, P.E.
P.E.# 58705

Revsd By:	Date:	Revisions:	
Revsd By:	Date:	Revisions:	
Revsd By:	Date:	Revisions:	
Drawn By: JR	Date: 02/20/14	Checked By:	Date:

1070 TECHNOLOGY DRIVE
N. VENICE, FL 34275
(941)-480-1600
CERT. OF AUTH. #29296

PGT®

Description: EXAMPLE CONFIGURATIONS

Title: SERIES 670 ALUM. SGD - NON-IMPACT

Series/Model:	Scale:	Sheet:	Drawing No.	Rev:
SGD-670	NTS	2 of 22	PGT0128	

EXAMPLE CONFIGURATIONS

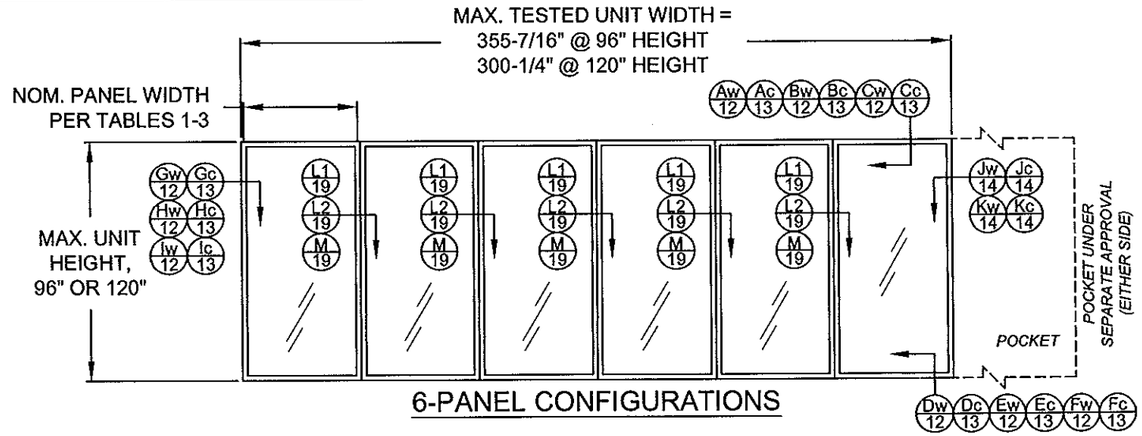

6-PANEL CONFIGURATIONS

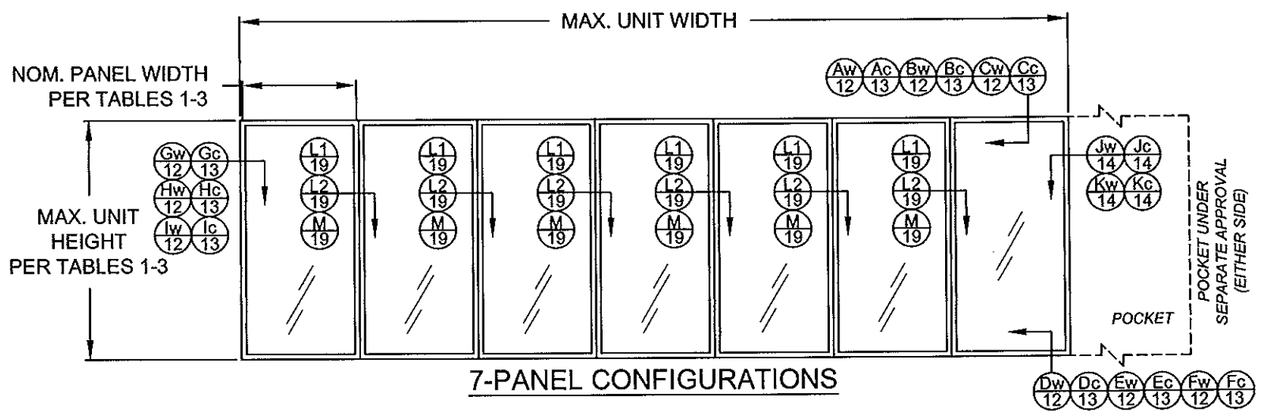

7-PANEL CONFIGURATIONS

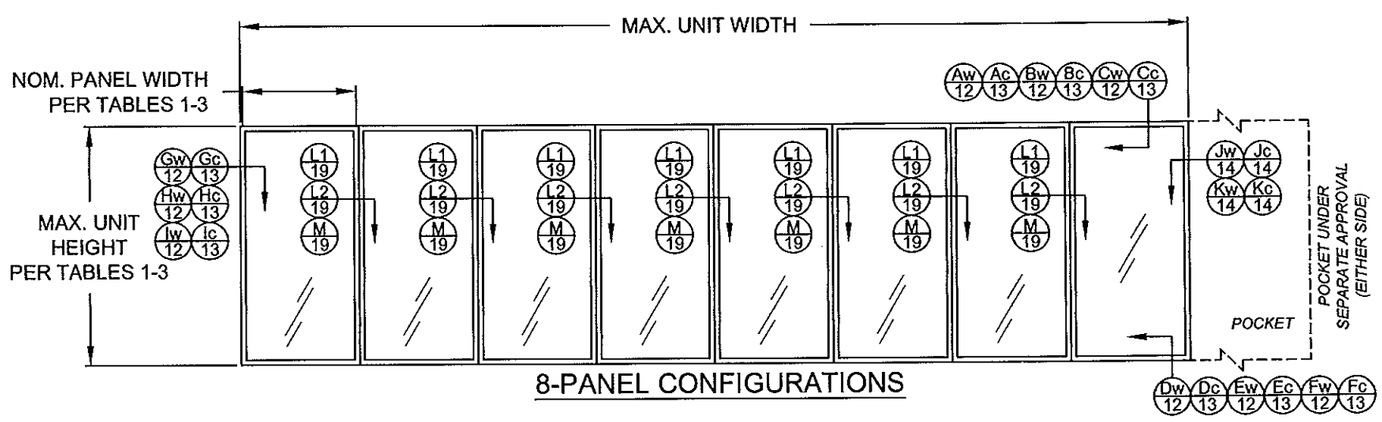

8-PANEL CONFIGURATIONS

CONFIGURATIONS NOTES:

1) ALL CONFIGURATIONS SHOWN ARE ALSO AVAILABLE AS POCKET CONFIGURATIONS AT EITHER OR BOTH JAMB LOCATIONS USING DETAIL "Jw", "Jc", "Kw" OR "Kc" INSTALLATION. EXAMPLE: 4-PANEL XXXX IN POCKET (p) CONFIGURATION CAN BE pXXXXp, pXXXX OR XXXXp. OXXX IN POCKET CONFIGURATION CAN BE OXXXp.

2) 90° & 135° CORNER CONFIGURATIONS CAN BE A COMBINATION OF ANY 2 STRAIGHT CONFIGURATIONS.

3) FOR NOM. PANEL WIDTH, SEE TABLES 1-3.

"X" = OPERABLE PANEL,
"O" = INOPERABLE PANEL,
"p" = POCKET

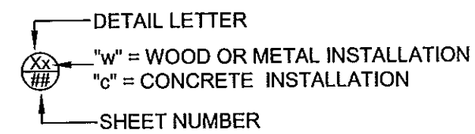

DLO WIDTH = NOM. PANEL WIDTH - 7"
DLO HEIGHT = DOOR UNIT HEIGHT - 10.125"
PANEL HEIGHT = DOOR UNIT HEIGHT - 1.866"

PRODUCT REVISED
as complying with the Florida
Building Code
Acceptance No. 14-0123.11
Expiration Date 4/17/20
By
Miami Dade Product Control

ANTHONY LYNN MILLER
LICENSE
No. 58705
STATE OF FLORIDA
PROFESSIONAL ENGINEER
1/30/15
A. LYNN MILLER, P.E.
P.E.# 58705

Revsd By:	Date:	Revisions:	
Revsd By:	Date:	Revisions:	
Revsd By:	Date:	Revisions:	
Drawn By: JR	Date: 02/20/14	Checked By:	Date:

1070 TECHNOLOGY DRIVE
N. VENICE, FL 34275
(941)-480-1600
CERT. OF AUTH. #29296

Description: EXAMPLE CONFIGURATIONS
Title: SERIES 670 ALUM. SGD - NON-IMPACT

Series/Model:	Scale:	Sheet:	Drawing No.	Rev:
SGD-670	NTS	3 of 22	PGT0128	

GLAZING DETAILS (G1 & G1A)

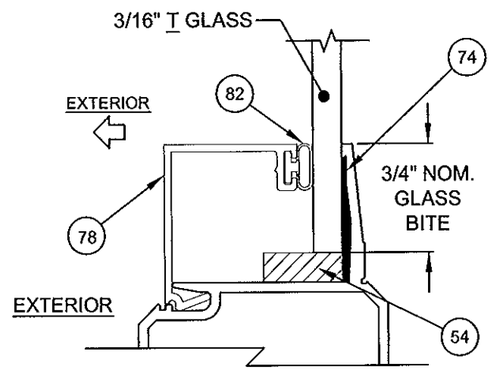

3/16" TEMPERED GLASS, TYPE G1

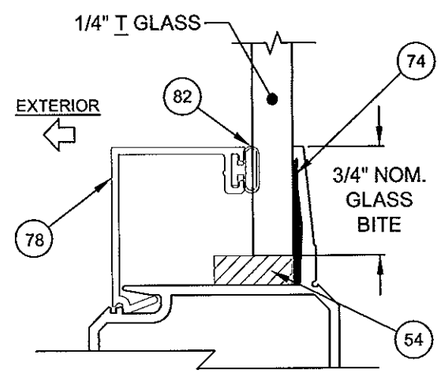

1/4" TEMPERED GLASS, TYPE G1A

PRODUCT REVISED
as complying with the Florida
Building Code
Acceptance No. 14-0123.11
Expiration Date 4/7/20
By [illegible]
Miami Dade Product Control

ANTHONY LYNN MILLER
LICENSE
No. 58705
STATE OF
FLORIDA
PROFESSIONAL ENGINEER
1/30/15
A. LYNN MILLER, P.E.
P.E.# 58705

GLAZING NOTES:
"T" = TEMPERED

Revsd By:	Date:	Revisions:	
Revsd By:	Date:	Revisions:	
Revsd By:	Date:	Revisions:	
Drawn By: JR	Date: 02/20/14	Checked By:	Date:

1070 TECHNOLOGY DRIVE
N. VENICE, FL 34275
(941)-480-1600
CERT. OF AUTH. #29296

PGT®

Description: GLAZING DETAILS
Title: SERIES 670 ALUM. SGD - NON-IMPACT

Series/Model:	Scale:	Sheet:	Drawing No.	Rev:
SGD-670	NTS	4 of 22	PGT0128	

GLAZING DETAILS (G2 & G2A)

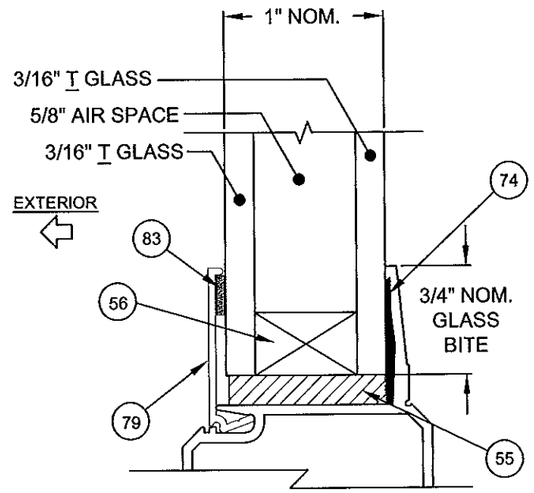

1" I.G. GLASS, TYPE G2

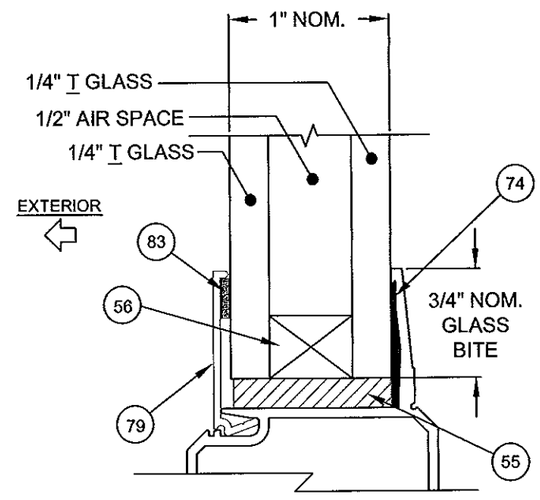

1" I.G. GLASS, TYPE G2A

GLAZING NOTES:
"T" = TEMPERED

PRODUCT REVIEWED
as complying with the Florida
Building Code
Acceptance No. 14-0123.11
Expiration Date 9/17/18
By Miami Dade Product Control

ANTHONY LYNN MILLER
LICENSE
No. 58705
1/30/15
STATE OF
FLORIDA
PROFESSIONAL ENGINEER
A. LYNN MILLER, P.E.
P.E.# 58705

Revsd By:	Date:	Revisions:	
Revsd By:	Date:	Revisions:	
Revsd By:	Date:	Revisions:	
Drawn By: JR	Date: 02/20/14	Checked By:	Date:

1070 TECHNOLOGY DRIVE
N. VENICE, FL 34275
(941)-480-1600
CERT. OF AUTH. #29296

PGT®

Description: GLAZING DETAILS
Title: SERIES 670 ALUM. SGD - NON-IMPACT

Series/Model:	Scale:	Sheet:	Drawing No.	Rev:
SGD-670	NTS	5 of 22	PGT0128	

TABLE 1:

Design Pressure (DP) and Anchor Quantities Required, (for all approved configurations on Sheets 2 & 3)

For corner astragal anchorage on 90° or 135° corner units, see sheet 11

Table applies to all Glass types and the Stile/Astragal types shown below. Positive (+) DP may be limited by Table 1A.			Door Unit Height															
			80"				84"				90"				96"			
			69-7/8" DLO				73-7/8" DLO				79-7/8" DLO				85-7/8" DLO			
			Anchor Group				Anchor Group				Anchor Group				Anchor Group			
			1	2	3	4	1	2	3	4	1	2	3	4	1	2	3	4
Nominal Panel Width	24"	17" DLO	*Design Pressure*	*+90.0 / -127.1*			*+90.0 / -120*				*+90.0 / -110.8*				*+90.0 / -102.9*			
			Head/Sill	C4+1	C4+1	C4+1	C4+1	C4+1	C4+1	C4+1	C4+1	C4+1	C4+1	C4+1	C4+1	C4+1	C4+1	C4+1
			Jamb	8	8	8	8	8	8	8	8	8	8	8	8	8	8	8
			P-hook	6+7	6+7	6+7	6+7	7+8	7+8	7+8	7+8	7+8	7+8	7+8	7+8	7+8	7+8	7+8
	30"	23" DLO	*Design Pressure*	*+90.0 / -106.3*			*+90.0 / -100.2*				*+90.0 / -92.2*				*+85.3 / -85.3*			
			Head/Sill	C4+1	C4+1	C4+1	C4+1	C4+1	C4+1	C4+1	C4+1	C4+1	C4+1	C4+1	C4+1	C4+1	C4+1	C4+1
			Jamb	8	8	8	8	8	8	8	8	8	8	8	8	8	8	8
			P-hook	6+7	6+7	6+7	6+7	7+8	7+8	7+8	7+8	7+8	7+8	7+8	7+8	7+8	7+8	7+8
	36"	29" DLO	*Design Pressure*	*+90.0 / -92.9*			*+87.3 / -87.3*				*+80.0 / -80*				*+73.8 / -73.8*			
			Head/Sill	C4+1	C4+1	C4+2	C4+2	C4+1	C4+1	C4+1	C4+1	C4+1	C4+1	C4+1	C4+1	C4+1	C4+1	C4+1
			Jamb	8	8	8	8	8	8	8	8	8	8	8	8	8	8	8
			P-hook	6+7	6+7	6+7	6+7	7+8	7+8	7+8	7+8	7+8	7+8	7+8	7+8	7+8	7+8	7+8
	42"	35" DLO	*Design Pressure*	*+83.7 / -83.7*			*+78.4 / -78.4*				*+71.6 / -71.6*				*+65.8 / -65.8*			
			Head/Sill	C4+2	C4+2	C4+2	C4+2	C4+2	C4+2	C4+2	C4+1	C4+1	C4+2	C4+2	C4+1	C4+1	C4+2	C4+2
			Jamb	8	8	8	8	8	8	8	8	8	8	8	8	8	8	8
			P-hook	6+7	6+7	6+7	6+7	7+8	7+8	7+8	7+8	7+8	7+8	7+8	7+8	7+8	7+8	7+8
	48"	41" DLO	*Design Pressure*	*+77.1 / -77.1*			*+72.0 / -72*				*+65.5 / -65.5*				*+60.0 / -60*			
			Head/Sill	C4+2	C4+2	C4+2	C4+2	C4+2	C4+2	C4+2	C4+2	C4+2	C4+2	C4+2	C4+2	C4+2	C4+2	C4+2
			Jamb	8	8	8	8	8	8	8	8	8	8	8	8	8	8	8
			P-hook	6+7	6+7	6+7	6+7	7+8	7+8	7+8	7+8	7+8	7+8	7+8	7+8	7+8	7+8	7+8
	54"	47" DLO	*Design Pressure*	*+72.5 / -72.5*			*+67.4 / -67.4*				*+61.0 / -61*				*+54.7 / -54.7*			
			Head/Sill	C4+2	C4+2	C4+2	C4+2	C4+2	C4+2	C4+2	C4+2	C4+2	C4+2	C4+2	C4+2	C4+2	C4+2	C4+2
			Jamb	8	8	8	8	8	8	8	8	8	8	8	8	8	8	8
			P-hook	6+7	6+7	6+7	6+7	7+8	7+8	7+8	7+8	7+8	7+8	7+8	7+8	7+8	7+8	7+8
	60"	53" DLO	*Design Pressure*	*+69.1 / -69.1*			*+64.0 / -64*				*+57.6 / -57.6*				*+50.6 / -50.6*			
			Head/Sill	C4+2	C4+2	C4+3	C4+3	C4+2	C4+2	C4+3	C4+3	C4+2	C4+2	C4+2	C4+2	C4+2	C4+2	C4+2
			Jamb	8	8	8	8	8	8	8	8	8	8	8	8	8	8	8
			P-hook	6+7	6+7	6+7	6+7	7+8	7+8	7+8	7+8	7+8	7+8	7+8	7+8	7+8	7+8	7+8

FOR EXAMPLE ON USING TABLE, SEE SHEET 7.

DLO WIDTH = NOM. PANEL WIDTH - 7"

DLO HEIGHT = DOOR UNIT HEIGHT - 10.125"

PANEL HEIGHT = DOOR UNIT HEIGHT - 1.866"

TABLE 1A:

Sill Height to Max. (+) DP
(Water Infiltration Rating)

Sill Riser Height (Flat or Box, see Sheet 17)	(+) Design Pressure, psf
Flush - 1-1/2"	see note 3
Low - 2-1/2"	+ 46.67
Medium - 3-1/4"	+ 60.0
High - 4"	+ 90.0

SEE NOTES 1-3

$$\text{OH RATIO} = \frac{\text{OH LENGTH}}{\text{OH HEIGHT}}$$

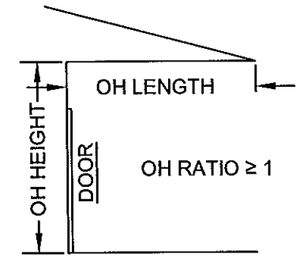

SEE NOTE 3

NOTES:

1) POSITIVE PRESSURES IN TABLE 1 ARE BASED ON THE USE OF THE 4" SILL.

2) WHEN USING THE 2-1/2" SILL, POSITIVE WATER DP IS 46.67 PSF MAX. WHEN USING THE 3-1/4" SILL, POSITIVE WATER DP IS 60.0 PSF MAX. WHEN USING THE 4" SILL, POSITIVE WATER DP IS 90.0 PSF MAX (NEGATIVE PRESSURES UNCHANGED). SEE TABLE 1A.

3) 4", 3-1/4" AND 2-1/2" SILL HEIGHTS ARE TESTED FOR WATER INFILTRATION WHEREAS THE 1-1/2" SILL IS NOT AND MUST ONLY BE USED WHERE WATER RESISTANCE IS NOT REQUIRED. MAX. POSITIVE DESIGN PRESSURES SHOWN IN TABLE 1 MAY BE USED WHEN THE DOOR IS PROTECTED BY AN OVERHANG COMPLYING WITH THE CURRENT FLORIDA BUILDING CODE (SEE ADJACENT DIAGRAM); THIS CONDITION IS NOT RATED FOR WATER INFILTRATION.

4) SEE SHEETS 10-14 FOR ANCHORAGE SPACING, EDGE DISTANCE AND EMBEDMENT INFORMATION.

5) DOOR SIZE TO COMPLY WITH CURRENT FBC EGRESS REQUIREMENTS WHEN REQUIRED.

6) JAMB ANCHORS ARE SPECIFIED AS THE TOTAL QUANTITY, DIVIDE BY 2 FOR PAIRS TO BE INSTALLED.

THE FOLLOWING STILE & ASTRAGAL TYPES SHALL BE USED FOR TABLE 1, SEE SHEETS 21 & 22 FOR PART DIMENSIONS AND SHEETS 18 & 19 FOR ASSEMBLY DETAILS.

Interlock	P-hook	Lockstile @ Jamb	Straight Astragal Assembly	Lockstile @ Straight Astragal	90° Astragal Assembly	Lockstile @ 90° Astragal	135° Astragal Assembly	Lockstile @ 135° Astragal
Standard Stiles	Standard Stile	Standard Stile	Standard Stile	Standard Stile	Heavy-duty Stile	Heavy-duty Stile	Heavy-duty Stile	Heavy-duty Stile
	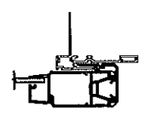	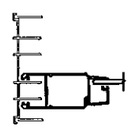	Standard Astragal 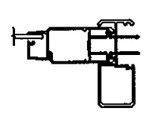		Outside Corner Inside Corner	Outside Corner 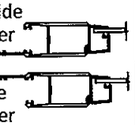 Inside Corner	Inside Corner 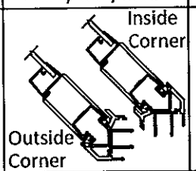 Outside Corner	
Part #60 (x2)	Part #60	Part #60	Part #60 (Stile) Part #67 (Astragal)	Part #60	Part #61 (Stile) Part #118 (Corner Receiver)	Part #119 (Out.) Part #120 (In.)	Part #61 (Stile) Parts #31 & #32 (Corn. & Fxd Mount)	Part #61

PRODUCT REVIEWED
as complying with the Florida Building Code
Acceptance No. 14-0123.11
Expiration Date 4/7/20
By [signature]
Miami Dade Product Control

ANTHONY LYNN MILLER
LICENSE
No. 58705
STATE OF FLORIDA
PROFESSIONAL ENGINEER
A. LYNN MILLER, P.E.
P.E.# 58705

Revsd By:	Date:	Revisions:	
Revsd By:	Date:	Revisions:	
Revsd By:	Date:	Revisions:	
Drawn By: JR	Date: 02/20/14	Checked By:	Date:

1070 TECHNOLOGY DRIVE
N. VENICE, FL 34275
(941)-480-1600
CERT. OF AUTH. #29296

Description: DP AND ANCHORAGE

Title: SERIES 670 ALUM. SGD - NON-IMPACT

Series/Model:	Scale:	Sheet:	Drawing No.	Rev:
SGD-670	NTS	6 of 22	PGT0128	

TABLE 2:

Design Pressure (DP) and Anchor Quantities Required, (for all approved configurations on Sheets 2 & 3)

For corner astragal anchorage on 90° or 135° corner units, see sheet 11

Table applies to all Glass types and the Stile/Astragal types shown below. Positive (+) DP may be limited by Table 2A.

Nominal Panel Width	DLO	Door Unit Height		80"	84"	90"	96"	102"	108"	114"	120"
				69-7/8" DLO	73-7/8" DLO	79-7/8" DLO	85-7/8" DLO	91-7/8" DLO	97-7/8" DLO	103-7/8" DLO	109-7/8" DLO
				Anchor Group	Anchor Group	Anchor Group	Anchor Group	Anchor Group	Anchor Group	Anchor Group	Anchor Group
				1 2 3 4	1 2 3 4	1 2 3 4	1 2 3 4	1 2 3 4	1 2 3 4	1 2 3 4	1 2 3 4
24"	17" DLO	Design Pressure		+90.0 / -140.0	+90.0 / -133.0	+90.0 / -122.0	+90.0 / -114.0	+90.0 / -106.0	+90.0 / -99.0	+90.0 / -93.0	+88.0 / -88.0
		Head/Sill		C4+1 C4+1 C4+1 C4+1	C4+1 C4+1 C4+1 C4+1	C4+1 C4+1 C4+1 C4+1	C4+1 C4+1 C4+1 C4+1	C4+1 C4+1 C4+1 C4+1	C4+1 C4+1 C4+1 C4+1	C4+1 C4+1 C4+1 C4+1	C4+1 C4+1 C4+1 C4+1
		Jamb		8 8 8 8	8 8 8 8	8 8 8 8	8 8 8 8	10 10 10 10	10 10 10 10	10 10 10 10	10 10 10 10
		P-hook		6+7 7+8 7+8 7+8	7+8 7+8 7+8 7+8	7+8 7+8 7+8 7+8	7+8 7+8 7+8 7+8	8+9 8+9 8+9 8+9	8+9 8+9 8+9 8+9	9+10 9+10 9+10 9+10	9+10 9+10 9+10 9+10
30"	23" DLO	Design Pressure		+90.0 / -141.8	+90.0 / -133.6	+90.0 / -122.9	+90.0 / -113.8	+90.0 / -105.9	+90.0 / -99.1	+90.0 / -93.1	+87.8 / -87.8
		Head/Sill		C5+1 C5+1 C5+2 C5+2	C5+1 C5+1 C5+2 C5+2	C5+1 C5+1 C5+1 C5+1	C5+1 C5+1 C5+1 C5+1	C5+1 C5+1 C5+1 C5+1	C5+1 C5+1 C5+1 C5+1	C5+1 C5+1 C5+1 C5+1	C5+1 C5+1 C5+1 C5+1
		Jamb		8 8 10 8	8 8 10 8	8 8 10 8	8 8 10 8	10 10 10 10	10 10 10 10	10 10 10 10	10 10 10 10
		P-hook		7+8 8+9 8+9 8+9	7+8 8+9 8+9 8+9	7+8 8+9 8+9 8+9	7+8 8+9 8+9 8+9	8+9 8+9 8+9 8+9	8+9 8+9 8+9 8+9	9+10 9+10 9+10 9+10	9+10 9+10 9+10 9+10
36"	29" DLO	Design Pressure		+90.0 / -123.9	+90.0 / -116.4	+90.0 / -106.7	+90.0 / -98.5	+90.0 / -91.4	+85.3 / -85.3	+80.0 / -80.0	+75.3 / -75.3
		Head/Sill		C5+2 C5+2 C5+2 C5+2	C5+2 C5+2 C5+2 C5+2	C5+2 C5+2 C5+2 C5+2	C5+1 C5+1 C5+2 C5+2	C5+1 C5+1 C5+2 C5+2	C5+1 C5+1 C5+1 C5+1	C5+1 C5+1 C5+1 C5+1	C5+1 C5+1 C5+1 C5+1
		Jamb		8 8 10 8	8 8 10 8	8 8 10 8	8 8 10 8	10 10 10 10	10 10 10 10	10 10 10 10	10 10 10 10
		P-hook		7+8 8+9 8+9 8+9	7+8 8+9 8+9 8+9	7+8 8+9 8+9 8+9	7+8 8+9 8+9 8+9	8+9 8+9 8+9 8+9	8+9 8+9 8+9 8+9	9+10 9+10 9+10 9+10	9+10 9+10 9+10 9+10
42"	35" DLO	Design Pressure		+90.0 / -111.6	+90.0 / -104.5	+90.0 / -95.4	+87.8 / -87.8	+81.3 / -81.3	+75.7 / -75.7	+70.8 / -70.8	+66.5 / -66.5
		Head/Sill		C5+2 C5+2 C5+2 C5+2	C5+2 C5+2 C5+2 C5+2	C5+2 C5+2 C5+2 C5+2	C5+2 C5+2 C5+2 C5+2	C5+2 C5+2 C5+2 C5+2	C5+2 C5+2 C5+2 C5+2	C5+1 C5+1 C5+2 C5+2	C5+1 C5+1 C5+2 C5+2
		Jamb		8 8 10 8	8 8 10 8	8 8 10 8	8 8 10 8	10 10 10 10	10 10 10 10	10 10 10 10	10 10 10 10
		P-hook		7+8 8+9 8+9 8+9	7+8 8+9 8+9 8+9	7+8 8+9 8+9 8+9	7+8 8+9 8+9 8+9	8+9 8+9 8+9 8+9	8+9 8+9 8+9 8+9	9+10 9+10 9+10 9+10	9+10 9+10 9+10 9+10
48"	41" DLO	Design Pressure		+90.0 / -102.9	+90.0 / -96.0	+87.3 / -87.3	+80.0 / -80.0	+73.8 / -73.8	+68.6 / -68.6	+64.0 / -64.0	+60.0 / -60.0
		Head/Sill		C5+2 C5+2 C5+3 C5+3	C5+2 C5+2 C5+2 C5+2	C5+2 C5+2 C5+2 C5+2	C5+2 C5+2 C5+2 C5+2	C5+2 C5+2 C5+2 C5+2	C5+2 C5+2 C5+2 C5+2	C5+2 C5+2 C5+2 C5+2	C5+2 C5+2 C5+2 C5+2
		Jamb		8 8 10 8	8 8 10 8	8 8 10 8	8 8 10 8	10 10 10 10	10 10 10 10	10 10 10 10	10 10 10 10
		P-hook		7+8 8+9 8+9 8+9	7+8 8+9 8+9 8+9	7+8 8+9 8+9 8+9	7+8 8+9 8+9 8+9	8+9 8+9 8+9 8+9	8+9 8+9 8+9 8+9	9+10 9+10 9+10 9+10	9+10 9+10 9+10 9+10
54"	47" DLO	Design Pressure		+83.0 / -83.0	+77.2 / -77.2	+69.8 / -69.8	+63.8 / -63.8	Not available in these sizes			
		Head/Sill		C4+2 C4+2 C5+3 C5+3	C4+2 C4+2 C5+2 C5+2	C4+2 C4+2 C5+2 C5+2	C4+2 C4+2 C5+2 C5+2				
		Jamb		8 8 8 8	8 8 8 8	8 8 8 8	8 8 8 8				
		P-hook		6+7 7+8 7+8 7+8	7+8 7+8 7+8 7+8	7+8 7+8 7+8 7+8	7+8 7+8 7+8 7+8				
60"	53" DLO	Design Pressure		+79.2 / -79.2	+73.3 / -73.3	+66.0 / -66.0	+60.0 / -60.0				
		Head/Sill		C4+3 C4+3 C5+3 C5+3	C4+3 C4+3 C5+3 C5+3	C4+2 C4+2 C5+3 C5+3	C4+2 C4+2 C5+2 C5+2				
		Jamb		8 8 8 8	8 8 8 8	8 8 8 8	8 8 8 8				
		P-hook		6+7 7+8 7+8 7+8	7+8 7+8 7+8 7+8	7+8 7+8 7+8 7+8	7+8 7+8 7+8 7+8				

◯ = EXAMPLE ON SHEET 9

TABLE 2A:

Sill Height to Max. (+) DP (Water Infiltration Rating)	
Sill Riser Height (Flat or Box, see Sheet 17)	(+) Design Pressure, psf
Flush - 1-1/2"	see note 3
Low - 2-1/2"	+ 46.67
Medium - 3-1/4"	+ 60.0
High - 4"	+ 90.0

SEE NOTES 1-3

DLO WIDTH =
NOM. PANEL WIDTH - 7"

DLO HEIGHT =
DOOR UNIT HEIGHT - 10.125"

PANEL HEIGHT =
DOOR UNIT HEIGHT - 1.866"

THE FOLLOWING STILE & ASTRAGAL TYPES SHALL BE USED FOR TABLE 2, SEE SHEETS 21 & 22 FOR PART DIMENSIONS AND SHEETS 18 & 19 FOR ASSEMBLY DETAILS.

Interlock	P-hook	Lockstile @ Jamb	Straight Astragal Assembly	Lockstile @ Straight Astragal	90° Astragal Assembly	Lockstile @ 90° Astragal	135° Astragal Assembly	Lockstile @ 135° Astragal
Heavy-duty Stiles	Heavy-duty Stile	Heavy-duty Stile	Heavy-duty Stile	Heavy-duty Stile	Heavy-duty Stile	Heavy-duty Stile	Heavy-duty Stile	Heavy-duty Stile
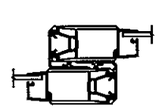	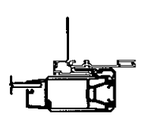	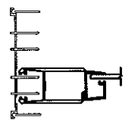	Standard Astragal 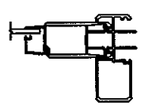	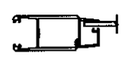	Outside Corner 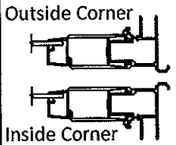 Inside Corner	Outside Corner 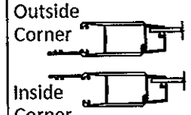 Inside Corner	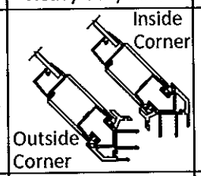 Inside Corner Outside Corner	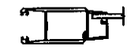
Part #61 (x2)	Part #61	Part #61	Part #61 (Stile) Part #67 (Astragal)	Part #61	Part #61 (Stile) Part #118 (Corner Receiver)	Part #119 (Out.) Part #120 (In.)	Part #61 (Stile) Parts #31 & #32 (Corn. & Fxd Mount)	Part #61

NOTES:

1) POSITIVE PRESSURES IN TABLE 2 ARE BASED ON THE USE OF THE 4" SILL.
2) WHEN USING THE 2-1/2" SILL, POSITIVE WATER DP IS 46.67 PSF MAX. WHEN USING THE 3-1/4" SILL, POSITIVE WATER DP IS 60.0 PSF MAX. WHEN USING THE 4" SILL, POSITIVE WATER DP IS 90.0 PSF MAX (NEGATIVE PRES. UNCHANGED). SEE TABLE 2A.
3) 4", 3-1/4" AND 2-1/2" SILL HEIGHTS ARE TESTED FOR WATER INFILTRATION WHEREAS THE 1-1/2" SILL IS NOT AND MUST ONLY BE USED WHERE WATER RESISTANCE IS NOT REQUIRED. MAX. POSITIVE DESIGN PRESSURES SHOWN IN TABLE 2 MAY BE USED WHEN THE DOOR IS PROTECTED BY AN OVERHANG COMPLYING WITH THE CURRENT FBC (SEE ADJACENT DIAGRAM); THIS CONDITION IS NOT RATED FOR WATER INFILTRATION.
4) SEE SHEETS 10-14 FOR ANCHORAGE SPACING, EDGE DISTANCE AND EMBEDMENT INFORMATION.
5) DOOR SIZE TO COMPLY WITH CURRENT FBC EGRESS REQUIREMENTS WHEN REQUIRED.
6) JAMB ANCHORS ARE SPECIFIED AS THE TOTAL QUANTITY, DIVIDE BY 2 FOR PAIRS TO BE INSTALLED.

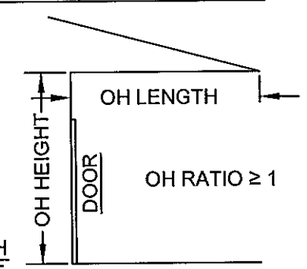

$$\text{OH RATIO} = \frac{\text{OH LENGTH}}{\text{OH HEIGHT}}$$

SEE NOTE 3

PRODUCT REVISED
as complying with the Florida Building Code
Acceptance No. 14-0123.11
Expiration Date 4/7/20
By [signature]
Miami Dade Product Control

ANTHONY LYNN MILLER LICENSE No. 58705 STATE OF FLORIDA PROFESSIONAL ENGINEER
7/30/15
A. LYNN MILLER, P.E.
P.E.# 58705

Revsd By:	Date:	Revisions:	
Revsd By:	Date:	Revisions:	
Revsd By:	Date:	Revisions:	
Drawn By: JR	Date: 02/20/14	Checked By:	Date:

1070 TECHNOLOGY DRIVE
N. VENICE, FL 34275
(941)-480-1600
CERT. OF AUTH. #29296

PGT®

Description: DP AND ANCHORAGE

Title: SERIES 670 ALUM. SGD - NON-IMPACT

Series/Model:	Scale:	Sheet:	Drawing No.	Rev:
SGD-670	NTS	7 of 22	PGT0128	

TABLE 3:

Design Pressure (DP) and Anchor Quantities Required, (for all approved configurations on Sheets 2 & 3)

For corner astragal anchorage on 90° or 135° corner units, see sheet 11

Nominal Panel Width	DLO	Table applies to all Glass types and the Stile/Astragal types shown below. Positive (+) DP may be limited by Table 3A.	Door Unit Height: 80" (69-7/8" DLO)				84" (73-7/8" DLO)				90" (79-7/8" DLO)				96" (85-7/8" DLO)			
			Anchor Type				Anchor Type				Anchor Type				Anchor Type			
			1	2	3	4	1	2	3	4	1	2	3	4	1	2	3	4
24"	17" DLO	*Design Pressure*	*+90.0 / -140.0*				*+90.0 / -133.0*				*+90.0 / -122.0*				*+90.0 / -114.0*			
		Head/Sill	C4+1	C4+1	C4+1	C4+1	C4+1	C4+1	C4+1	C4+1	C4+1	C4+1	C4+1	C4+1	C4+1	C4+1	C4+1	C4+1
		Jamb	8	8	8	8	8	8	8	8	8	8	8	8	8	8	8	8
		P-hook	6+7	7+8	7+8	7+8	7+8	7+8	7+8	7+8	7+8	7+8	7+8	7+8	7+8	7+8	7+8	7+8
30"	23" DLO	*Design Pressure*	*+90.0 / -159.5*				*+90.0 / -150.3*				*+90.0 / -138.2*				*+90.0 / -128*			
		Head/Sill	C5+2	C5+2	C6+2	C6+2	C5+2	C5+2	C6+2	C6+2	C5+1	C5+1	C6+2	C6+2	C5+1	C5+1	C6+2	C6+2
		Jamb	8	8	10	8	8	8	10	8	8	8	10	8	8	8	10	8
		P-hook	8+9	9+10	9+10	9+10	8+9	9+10	9+10	9+10	8+9	9+10	9+10	9+10	8+9	9+10	9+10	9+10
36"	29" DLO	*Design Pressure*	*+90.0 / -139.4*				*+90.0 / -130.9*				*+90.0 / -120*				*+90.0 / -110.8*			
		Head/Sill	C5+2	C5+2	C6+2	C6+2	C5+2	C5+2	C6+2	C6+2	C5+2	C5+2	C6+2	C6+2	C5+2	C5+2	C6+2	C6+2
		Jamb	8	8	10	8	8	8	10	8	8	8	10	8	8	8	10	8
		P-hook	8+9	9+10	9+10	9+10	8+9	9+10	9+10	9+10	8+9	9+10	9+10	9+10	8+9	9+10	9+10	9+10
42"	35" DLO	*Design Pressure*	*+90.0 / -125.5*				*+90.0 / -117.6*				*+90.0 / -107.3*				*+90.0 / -98.7*			
		Head/Sill	C5+2	C5+2	C6+2	C6+2	C5+2	C5+2	C6+2	C6+2	C5+2	C5+2	C6+2	C6+2	C5+2	C5+2	C6+2	C6+2
		Jamb	8	8	10	8	8	8	10	8	8	8	10	8	8	8	10	8
		P-hook	8+9	9+10	9+10	9+10	8+9	9+10	9+10	9+10	8+9	9+10	9+10	9+10	8+9	9+10	9+10	9+10
48"	41" DLO	*Design Pressure*	*+90.0 / -115.7*				*+90.0 / -108*				*+90.0 / -98.2*				*+90.0 / -90*			
		Head/Sill	C5+3	C5+3	C6+3	C6+3	C5+2	C5+2	C6+3	C6+3	C5+2	C5+2	C6+2	C6+2	C5+2	C5+2	C6+2	C6+2
		Jamb	8	8	10	8	8	8	10	8	8	8	10	8	8	8	10	8
		P-hook	8+9	9+10	9+10	9+10	8+9	9+10	9+10	9+10	8+9	9+10	9+10	9+10	8+9	9+10	9+10	9+10
54"	47" DLO	*Design Pressure*	*+83 / -83*				*+77.2 / -77.2*				*+69.8 / -69.8*				*+62.6 / -62.6*			
		Head/Sill	C4+2	C4+2	C5+3	C5+3	C4+2	C4+2	C5+2	C5+2	C4+2	C4+2	C5+2	C5+2	C4+2	C4+2	C4+2	C4+2
		Jamb	8	8	8	8	8	8	8	8	8	8	8	8	8	8	8	8
		P-hook	6+7	7+8	7+8	7+8	7+8	7+8	7+8	7+8	7+8	7+8	7+8	7+8	7+8	7+8	7+8	7+8
60"	53" DLO	*Design Pressure*	*+79.2 / -79.2*				*+73.3 / -73.3*				*+66 / -66*				*+58 / -58*			
		Head/Sill	C4+3	C4+3	C5+3	C5+3	C4+3	C4+3	C5+3	C5+3	C4+2	C4+2	C5+3	C5+3	C4+2	C4+2	C4+2	C4+2
		Jamb	8	8	8	8	8	8	8	8	8	8	8	8	8	8	8	8
		P-hook	6+7	7+8	7+8	7+8	7+8	7+8	7+8	7+8	7+8	7+8	7+8	7+8	7+8	7+8	7+8	7+8

FOR EXAMPLE ON USING TABLE, SEE SHEET 7.

DLO WIDTH = NOM. PANEL WIDTH - 7"

DLO HEIGHT = DOOR UNIT HEIGHT - 10.125"

PANEL HEIGHT = DOOR UNIT HEIGHT - 1.866"

TABLE 3A:

Sill Height to Max. (+) DP (Water Infiltration Rating)	
Sill Riser Height (Flat or Box, see Sheet 17)	(+) Design Pressure, psf
Flush - 1-1/2"	see note 3
Low - 2-1/2"	+ 46.67
Medium - 3-1/4"	+ 60.0
High - 4"	+ 90.0

SEE NOTES 1-3

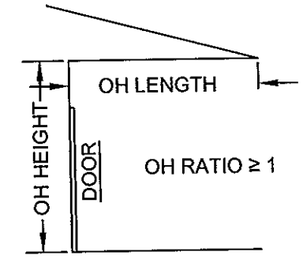

$$\text{OH RATIO} = \frac{\text{OH LENGTH}}{\text{OH HEIGHT}}$$

NOTES:

1) POSITIVE PRESSURES IN TABLE 3 ARE BASED ON THE USE OF THE 4" SILL.

2) WHEN USING THE 2-1/2" SILL, POSITIVE WATER DP IS 46.67 PSF MAX. WHEN USING THE 3-1/4" SILL, POSITIVE WATER DP IS 60.0 PSF MAX. WHEN USING THE 4" SILL, POSITIVE WATER DP IS 90.0 PSF MAX (NEGATIVE PRESSURES UNCHANGED). SEE TABLE 3A.

3) 4", 3-1/4" AND 2-1/2" SILL HEIGHTS ARE TESTED FOR WATER INFILTRATION WHEREAS THE 1-1/2" SILL IS NOT AND MUST ONLY BE USED WHERE WATER RESISTANCE IS NOT REQUIRED. MAX. POSITIVE DESIGN PRESSURES SHOWN IN TABLE 3 MAY BE USED WHEN THE DOOR IS PROTECTED BY AN OVERHANG COMPLYING WITH THE CURRENT FLORIDA BUILDING CODE (SEE ADJACENT DIAGRAM); THIS CONDITION IS NOT RATED FOR WATER INFILTRATION.

4) SEE SHEETS 10-14 FOR ANCHORAGE SPACING, EDGE DISTANCE AND EMBEDMENT INFORMATION.

5) DOOR SIZE TO COMPLY WITH CURRENT FBC EGRESS REQUIREMENTS WHEN REQUIRED.

6) JAMB ANCHORS ARE SPECIFIED AS THE TOTAL QUANTITY, DIVIDE BY 2 FOR PAIRS TO BE INSTALLED.

THE FOLLOWING STILE & ASTRAGAL TYPES SHALL BE USED FOR TABLE 3, SEE SHEETS 21 & 22 FOR PART DIMENSIONS AND SHEETS 18 & 19 FOR ASSEMBLY DETAILS.

Interlock	P-hook	Lockstile @ Jamb	Straight Astragal Assembly	Lockstile @ Straight Astragal	90° Astragal Assembly	Lockstile @ 90° Astragal	135° Astragal Assembly	Lockstile @ 135° Astragal
Heavy-duty Stiles	Heavy-duty Stile	Heavy-duty Stile	Heavy-duty Stile	Heavy-duty Stile	Heavy-duty Stile	Heavy-duty Stile	Heavy-duty Stile	Heavy-duty Stile
			Heavy-duty Astragal					
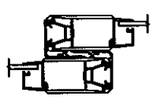	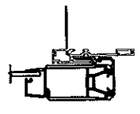	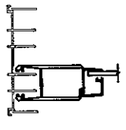	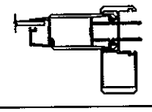	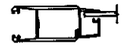	Outside Corner 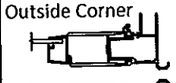 Inside Corner 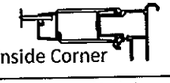	Outside Corner 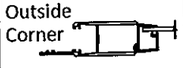 Inside Corner 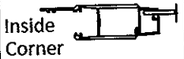	Inside Corner 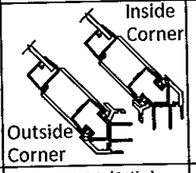 Outside Corner	
Part #61 (x2)	Part #61	Part #61	Part #61 (Stile) Part #68 (Astragal)	Part #61	Part #61 (Stile) Part #118 (Corner Receiver)	Part #119 (Out.) Part #120 (In.)	Part #61 (Stile) Parts #31 & #32 (Corn. & Fxd Mount)	Part #61

PRODUCT REVISED
as complying with the Florida Building Code
Acceptance No. 14-0123.11
Expiration Date 4/7/20
By [signature]
Miami Dade Product Control

ANTHONY LYNN MILLER
LICENSE
No. 58705
STATE OF FLORIDA
PROFESSIONAL ENGINEER
1/30/15
A. LYNN MILLER, P.E.
P.E.# 58705

Revsd By:	Date:	Revisions:	
Revsd By:	Date:	Revisions:	
Revsd By:	Date:	Revisions:	
Drawn By: JR	Date: 02/20/14	Checked By:	Date:

1070 TECHNOLOGY DRIVE
N. VENICE, FL 34275
(941)-480-1600
CERT. OF AUTH. #29296

Description: DP AND ANCHORAGE

Title: SERIES 670 ALUM. SGD - NON-IMPACT

Series/Model:	Scale:	Sheet:	Drawing No.	Rev:
SGD-670	NTS	8 of 22	PGT0128	

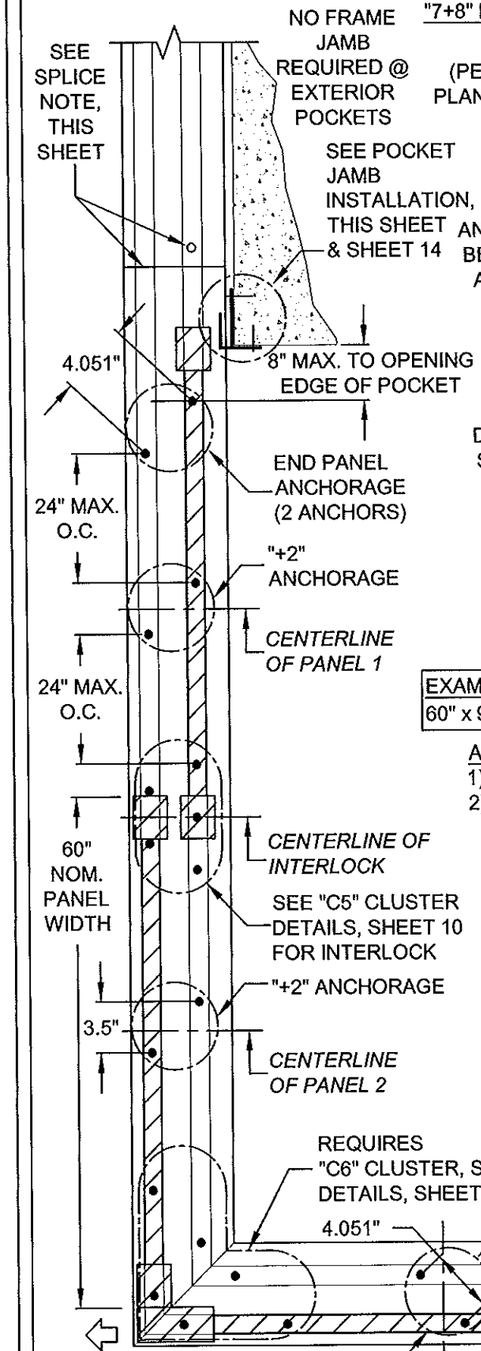

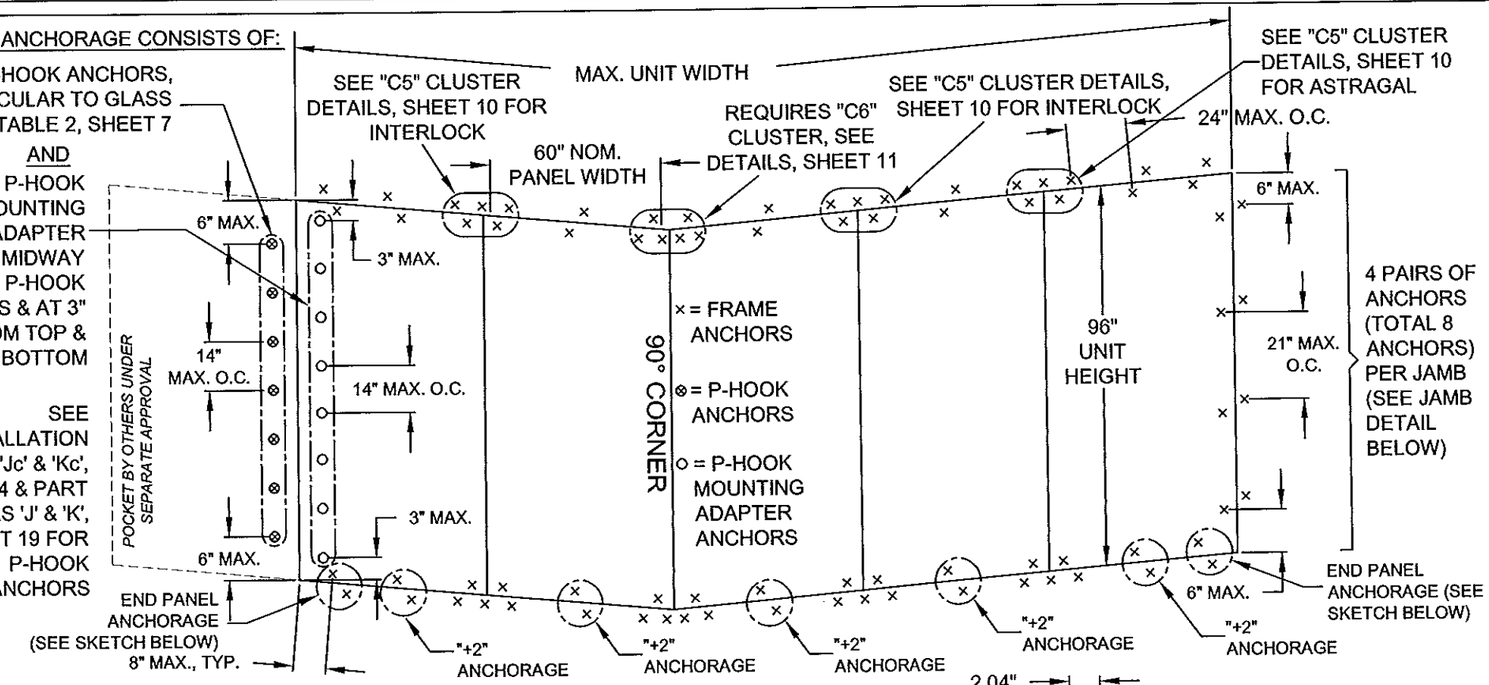

EXAMPLE: 5-PANEL, 2 TRACK, 90° OUTSIDE CORNER - pXX/XXO - EXT. MOUNT POCKET ANCHORAGE PLAN:
60" x 96" NOM. PANELS, ANCHOR GROUP 3 IN CONCRETE SUBSTRATE (SEE TABLE 2, SHEET 7)

ANCHORAGE EXAMPLE NOTES:

1) APPROVED ANCHORS: SEE TABLE A, SHEET 1
2) ANCHOR LOCATION SPACING FOR ANCHOR QUANTITIES SPECIFIED IN TABLES 1-3, SHEETS 6-8:

HEAD & SILL: 8" MAX. FROM FRAME CORNERS. USE SPECIFIED CLUSTER FROM APPROPRIATE TABLES, SHEETS 6-8 AT EACH INTERLOCK AND STRAIGHT AND CORNER ASTRAGAL LOCATION, PLUS SPECIFIED QUANTITY OF ADDITIONAL INTERMEDIATE ANCHORS PER PANEL. ADDITIONAL ANCHORS 24" O.C. MAXIMUM.

ANCHORS AT THE MIDPOINT OF END PANELS ARE ONLY REQUIRED IF THE O.C. DISTANCE TO THE NEXT ANCHOR CLUSTER IS OVER 24", OTHERWISE ANCHORS ARE NOT REQUIRED AS PER THE FIGURE AT RIGHT:

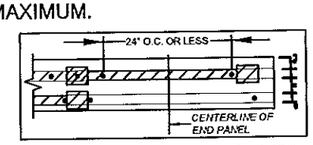

JAMBS & P-HOOKS: 6" MAX. FROM BOTTOM, 21" MAX. ANCHOR PAIR O.C. (JAMBS), 14" MAX. ANCHOR O.C. (P-HOOK) UTILIZING ANCHOR QUANTITIES FROM APPROPRIATE TABLES, SHEETS 6-8. SEE P-HOOK ANCHOR DETAILS ON SHEET 14.

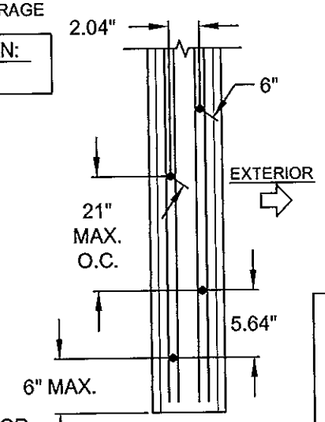

2-TRACK FRAME JAMB ANCHOR PAIR

SPLICE NOTE:
NON-STRUCTURAL ANCHORS MAY BE ADDED AS NEEDED TO ALIGN THE HEAD OR SILL IF A SPLICE OCCURS AT THE P-HOOK.

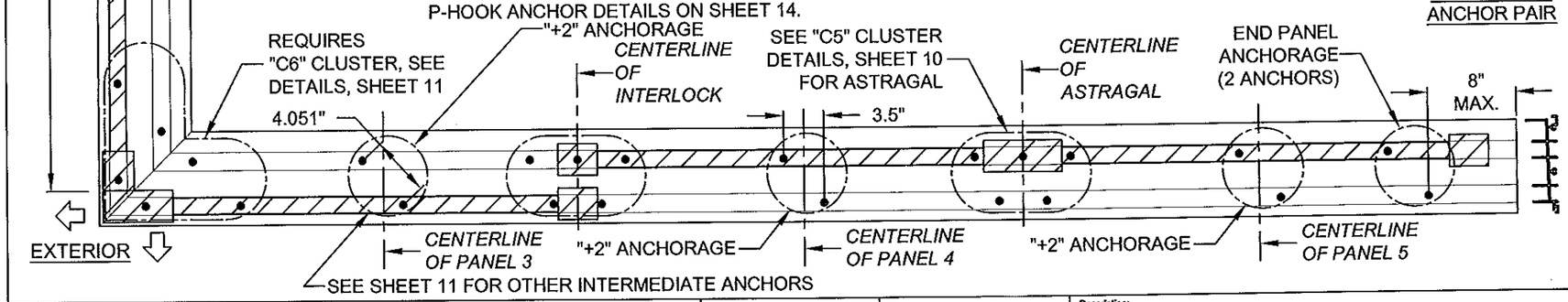

PRODUCT REVISED
as complying with the Florida Building Code
Acceptance No. 14-0123.11
Expiration Date 4/7/20
By [signature]
Miami Dade Product Control

ANTHONY LYNN MILLER
LICENSE
No. 58705
7/30/15
STATE OF FLORIDA
PROFESSIONAL ENGINEER
A. LYNN MILLER, P.E.
P.E.# 58705

Revsd By:	Date:	Revisions:	
Revsd By:	Date:	Revisions:	
Revsd By:	Date:	Revisions:	
Drawn By: JR	Date: 02/20/14	Checked By:	Date:

1070 TECHNOLOGY DRIVE
N. VENICE, FL 34275
(941)-480-1600
CERT. OF AUTH. #29296

PGT®

Description: ANCHORAGE SPACING & EXAMPLE PLANS
Title: SERIES 670 ALUM. SGD - NON-IMPACT

Series/Model:	Scale:	Sheet:	Drawing No.	Rev:
SGD-670	NTS	9 of 22	PGT0128	

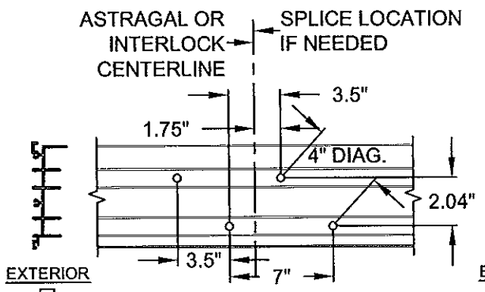

2-TRACK FRAME HEAD/SILL @ ASTRAGAL OR INTERLOCK (USE WHERE 4 CLUSTER ANCHORS ARE REQUIRED, "C4")

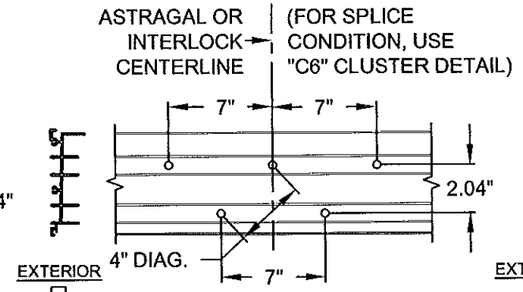

2-TRACK FRAME HEAD/SILL @ ASTRAGAL OR INTERLOCK (USE WHERE 5 CLUSTER ANCHORS ARE REQUIRED, "C5")

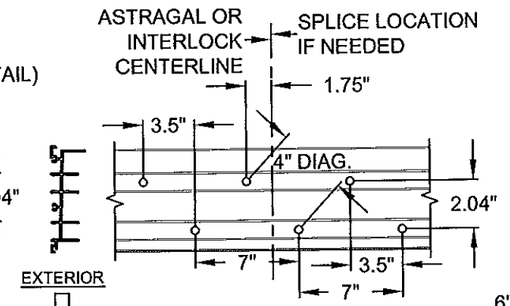

2-TRACK FRAME HEAD/SILL @ ASTRAGAL OR INTERLOCK (USE WHERE 6 CLUSTER ANCHORS ARE REQUIRED, "C6")

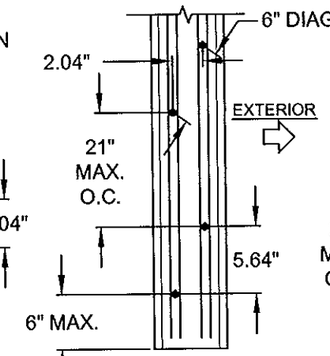

2-TRACK FRAME JAMB ANCHOR PAIR

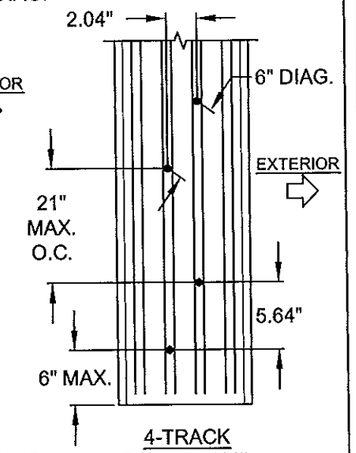

4-TRACK FRAME JAMB ANCHOR PAIR

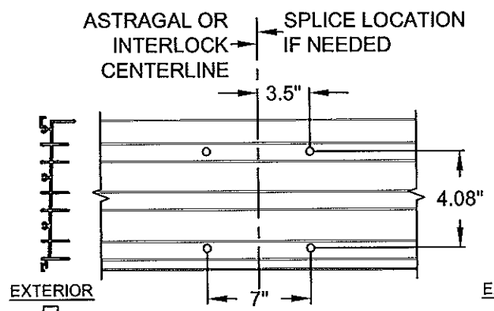

3-TRACK FRAME HEAD/SILL @ ASTRAGAL OR INTERLOCK (USE WHERE 4 CLUSTER ANCHORS ARE REQUIRED, "C4")

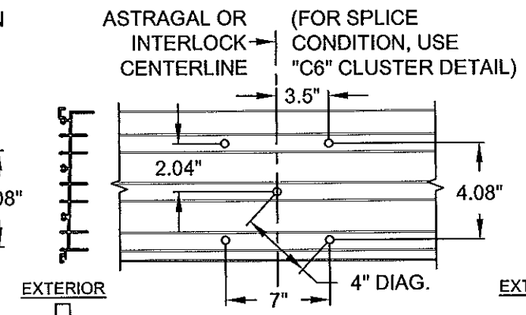

3-TRACK FRAME HEAD/SILL @ ASTRAGAL OR INTERLOCK (USE WHERE 5 CLUSTER ANCHORS ARE REQUIRED, "C5")

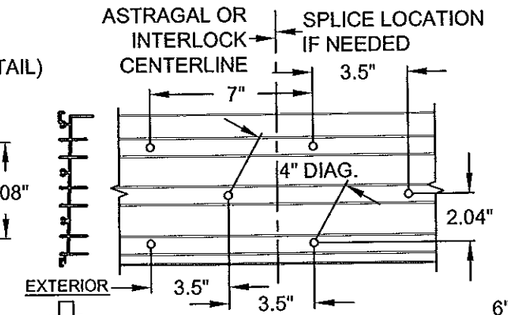

3-TRACK FRAME HEAD/SILL @ ASTRAGAL OR INTERLOCK (USE WHERE 6 CLUSTER ANCHORS ARE REQUIRED, "C6")

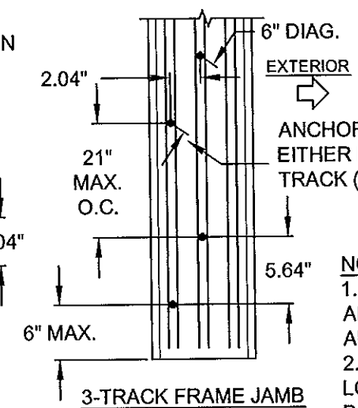

3-TRACK FRAME JAMB ANCHOR PAIR

ANCHORS MAY BE INSTALLED EITHER IN THE EXT. OR INT. TRACK (INT. SHOWN)

NOTES:
1. ALL DIMENSIONS SHOWN ARE BASED ON MIN. ALLOWED.
2. FOR HEAD OR SILL SPLICE LOCATIONS/ANCHORAGE AT P-HOOK SEE SHEET 9.

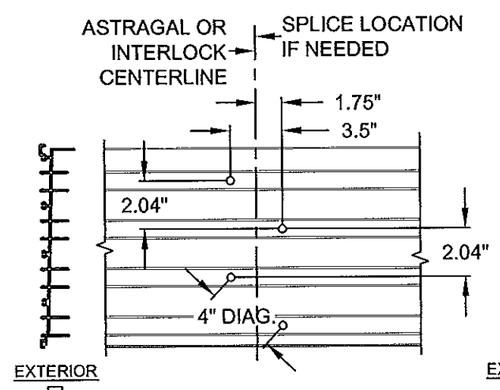

4-TRACK FRAME HEAD/SILL @ ASTRAGAL OR INTERLOCK (USE WHERE 4 CLUSTER ANCHORS ARE REQUIRED, "C4")

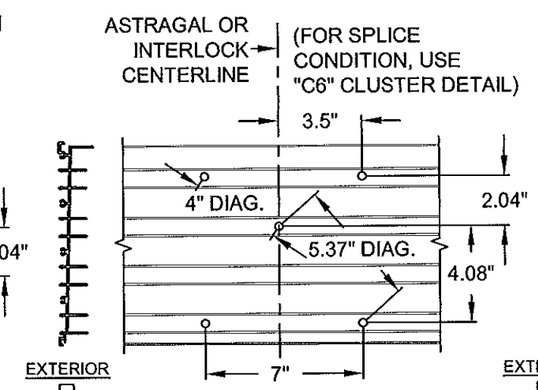

4-TRACK FRAME HEAD/SILL @ ASTRAGAL OR INTERLOCK (USE WHERE 5 CLUSTER ANCHORS ARE REQUIRED, "C5")

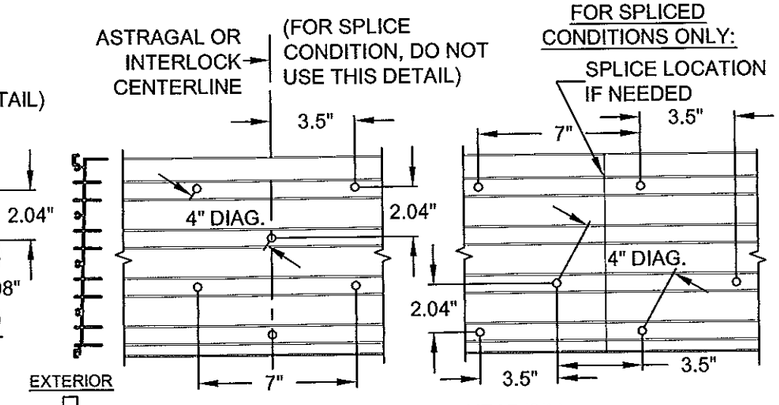

4-TRACK FRAME HEAD/SILL @ ASTRAGAL OR INTERLOCK (USE WHERE 6 CLUSTER ANCHORS ARE REQUIRED, "C6") WITH & WITHOUT SPLICE CONDITION

PRODUCT REVISED as complying with the Florida Building Code
Acceptance No. 14-0123.11
Expiration Date 4/17/20
By Lynn L. Chan
Miami Dade Product Control

ANTHONY LYNN MILLER LICENSE No. 58705 STATE OF FLORIDA PROFESSIONAL ENGINEER
11/30/15

A. LYNN MILLER, P.E.
P.E.# 58705

Revsd By:	Date:	Revisions:	
Revsd By:	Date:	Revisions:	
Revsd By:	Date:	Revisions:	
Drawn By: JR	Date: 02/20/14	Checked By:	Date:

1070 TECHNOLOGY DRIVE
N. VENICE, FL 34275
(941)-480-1600
CERT. OF AUTH. #29296

PGT®

Description: ANCHORAGE, EXAMPLE CLUSTERS

Title: SERIES 670 ALUM. SGD - NON-IMPACT

Series/Model:	Scale:	Sheet:	Drawing No.	Rev:
SGD-670	NTS	10 of 22	PGT0128	

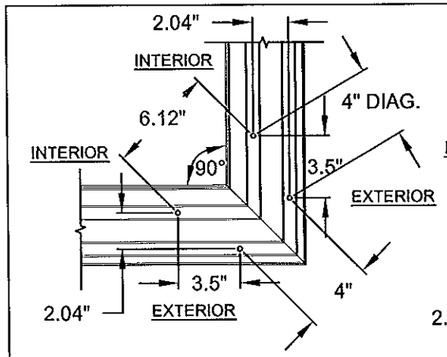

90° CORNER
2-TRACK FRAME HEAD/SILL
(USE WHERE 4 CLUSTER ANCHORS ARE REQUIRED, "C4")

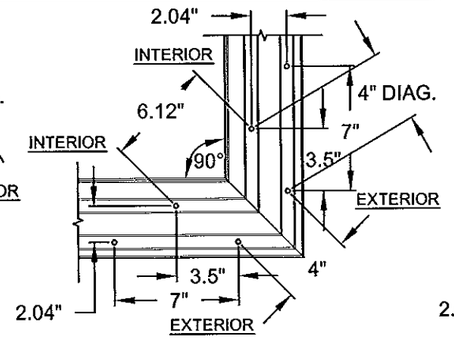

90° CORNER
2-TRACK FRAME HEAD/SILL
(USE WHERE 5 OR 6 CLUSTER ANCHORS ARE REQUIRED, "C6")

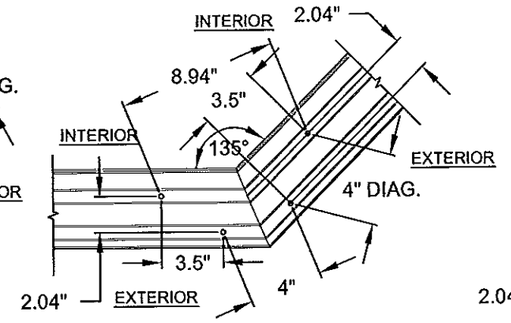

135° CORNER
2-TRACK FRAME HEAD/SILL
(USE WHERE 4 CLUSTER ANCHORS ARE REQUIRED, "C4")

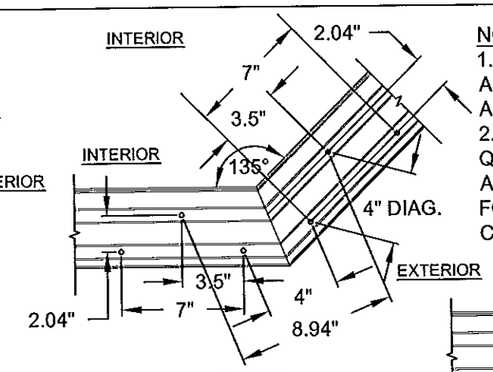

135° CORNER
2-TRACK FRAME HEAD/SILL
(USE WHERE 5 OR 6 CLUSTER ANCHORS ARE REQUIRED, "C6")

NOTES:
1. ALL DIMENSIONS SHOWN ARE BASED ON MINIMUM ALLOWED.
2. DETAILS DEPICT ANCHOR QUANTITY AND SPACING, AND WOULD BE IDENTICAL FOR EXTERIOR OR INTERIOR CORNER CONFIGURATIONS.

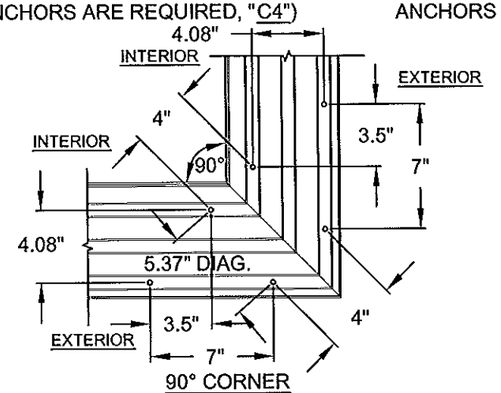

90° CORNER
3-TRACK FRAME HEAD/SILL
("C6" ANCHOR CLUSTER REQUIRED AT ALL 3-TRACK CORNERS)

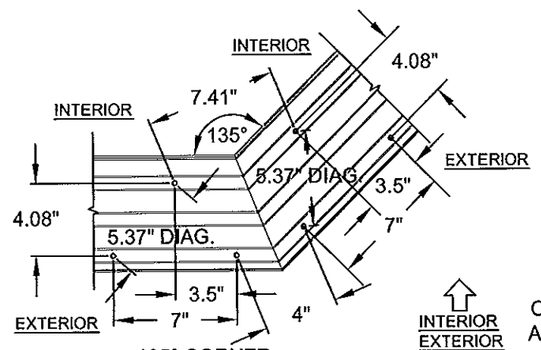

135° CORNER
3-TRACK FRAME HEAD/SILL
("C6" ANCHOR CLUSTER REQUIRED AT ALL 3-TRACK CORNERS)

INTERIOR
EXTERIOR
ON ALL VIEWS

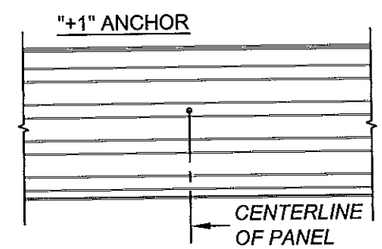

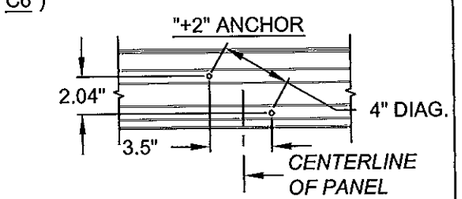

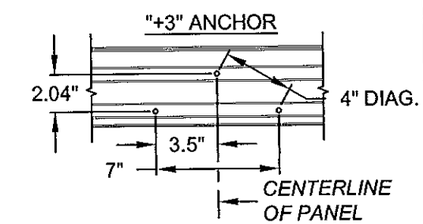

2-TRACK FRAME HEAD/SILL
INTERMEDIATE ANCHOR LAYOUT

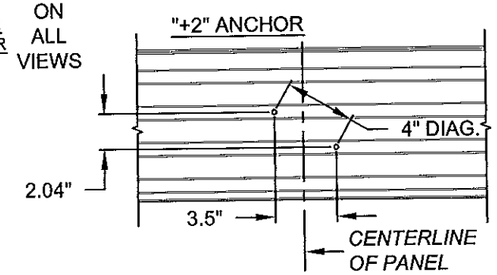

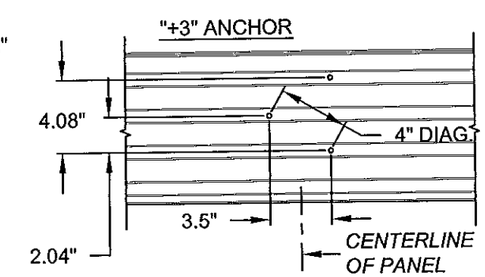

4-TRACK FRAME HEAD/SILL
INTERMEDIATE ANCHOR LAYOUT
(3-TRACK SIMILAR)

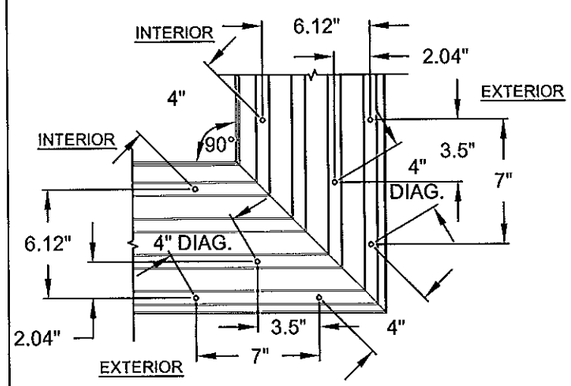

90° CORNER
4-TRACK FRAME HEAD/SILL
("C8" ANCHOR CLUSTER REQUIRED AT ALL 4-TRACK CORNERS)

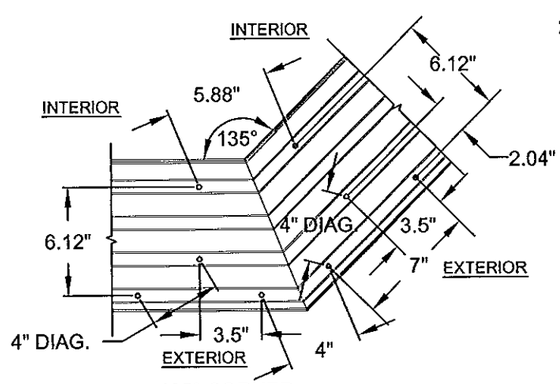

135° CORNER
4-TRACK FRAME HEAD/SILL
("C8" ANCHOR CLUSTER REQUIRED AT ALL 4-TRACK CORNERS)

PRODUCT REVISED
as complying with the Florida Building Code
Acceptance No. 14-0123.11
Expiration Date 4/17/20
By
Miami Dade Product Control

ANTHONY LYNN MILLER
LICENSE
No. 58705
1/30/15
STATE OF FLORIDA
PROFESSIONAL ENGINEER

A. LYNN MILLER, P.E.
P.E.# 58705

Revsd By:	Date:	Revisions:	
Revsd By:	Date:	Revisions:	
Revsd By:	Date:	Revisions:	
Drawn By: JR	Date: 02/20/14	Checked By:	Date:

1070 TECHNOLOGY DRIVE
N. VENICE, FL 34275
(941)-480-1600
CERT. OF AUTH. #29296

PGT®

Description: ANCHORAGE, EXAMPLE CLUSTERS
Title: SERIES 670 ALUM. SGD - NON-IMPACT

Series/Model:	Scale:	Sheet:	Drawing No.	Rev:
SGD-670	NTS	11 of 22	PGT0128	

INSTALLATION DETAILS

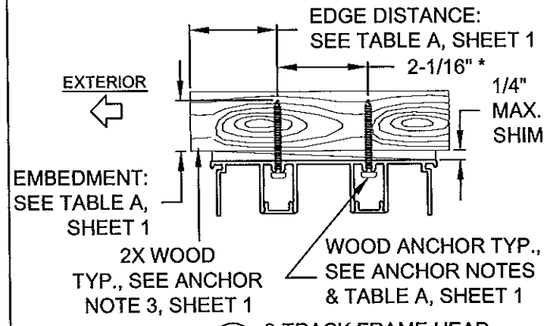

DET Aw 2-TRACK FRAME HEAD WOOD INSTALLATION

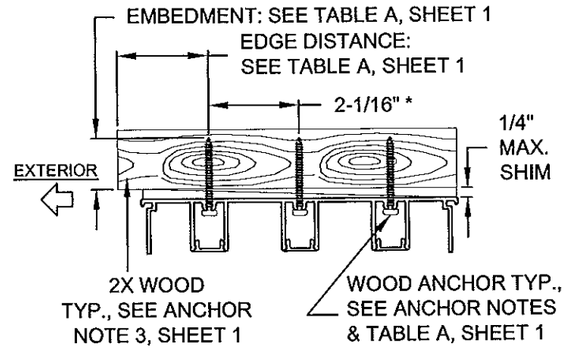

DET Bw 3-TRACK FRAME HEAD WOOD INSTALLATION

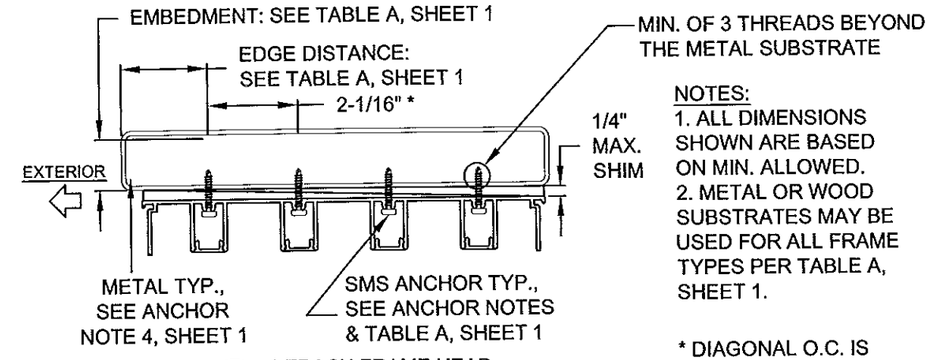

DET Cw 4-TRACK FRAME HEAD METAL INSTALLATION

NOTES:
1. ALL DIMENSIONS SHOWN ARE BASED ON MIN. ALLOWED.
2. METAL OR WOOD SUBSTRATES MAY BE USED FOR ALL FRAME TYPES PER TABLE A, SHEET 1.

* DIAGONAL O.C. IS MIN 4" (HEAD & SILL) OR 6" (JAMB) SEE DETAILS, SHEETS 10 & 11.

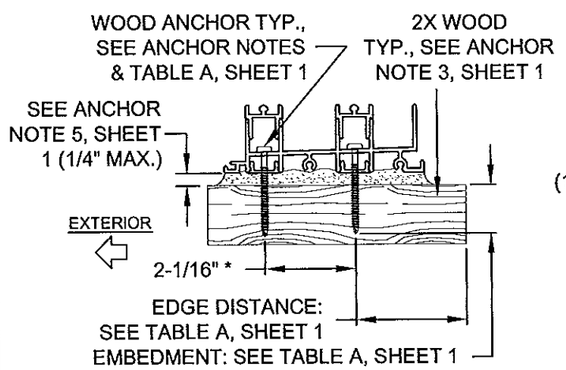

DET Dw 2-TRACK FRAME SILL WOOD INSTALLATION

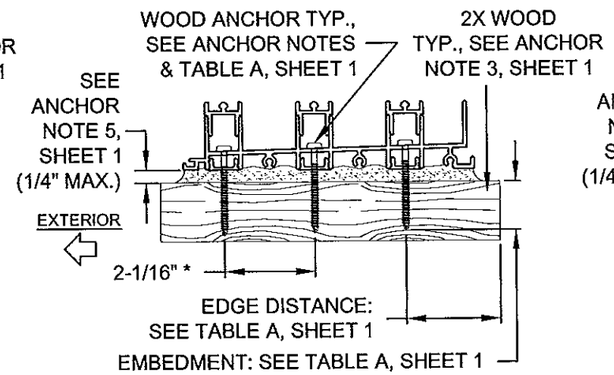

DET Ew 3-TRACK FRAME SILL WOOD INSTALLATION

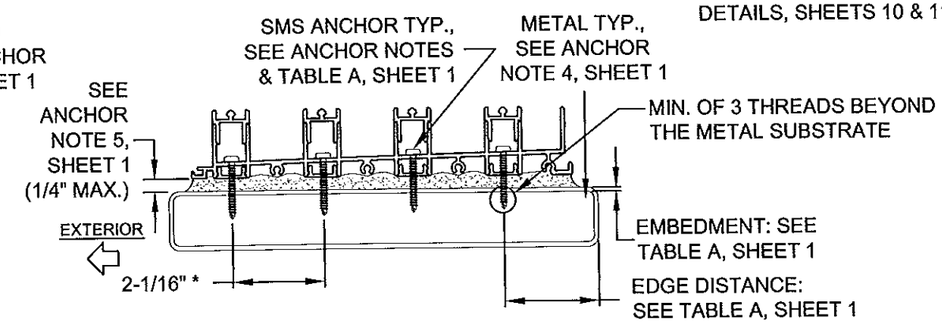

DET Fw 4-TRACK FRAME SILL METAL INSTALLATION

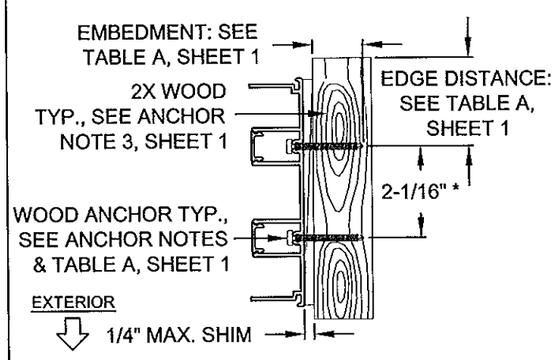

DET Gw 2-TRACK FRAME JAMB WOOD INSTALLATION

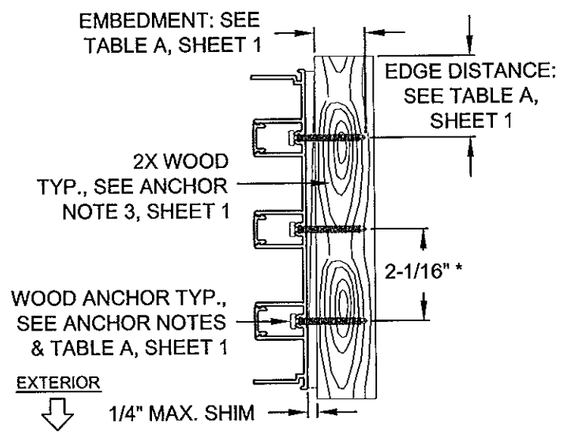

DET Hw 3-TRACK FRAME JAMB WOOD INSTALLATION

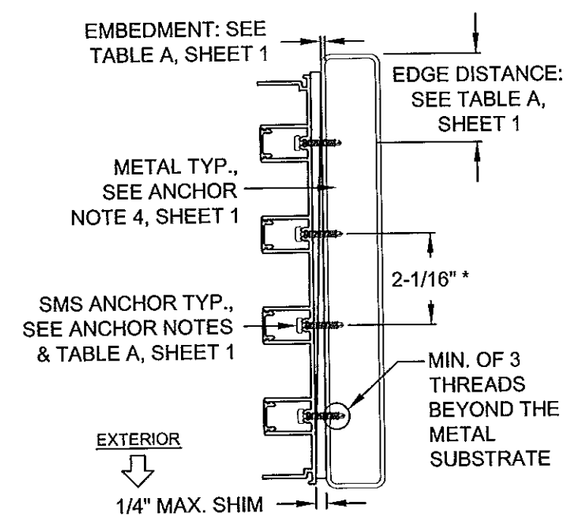

DET Iw 4-TRACK FRAME JAMB METAL INSTALLATION

PRODUCT REVIEWED as complying with the Florida Building Code
Acceptance No. 14-0123.11
Expiration Date 6/17/20
By [signature]
Miami Dade Product Control

ANTHONY LYNN MILLER
LICENSE
No. 58705
1/30/15
STATE OF FLORIDA
PROFESSIONAL ENGINEER
A. LYNN MILLER, P.E.
P.E.# 58705

Revsd By:	Date:	Revisions:	
Revsd By:	Date:	Revisions:	
Revsd By:	Date:	Revisions:	
Drawn By: JR	Date: 02/20/14	Checked By:	Date:

1070 TECHNOLOGY DRIVE
N. VENICE, FL 34275
(941)-480-1600
CERT. OF AUTH. #29296

PGT®

Description: ANCHORAGE DETAILS
Title: SERIES 670 ALUM. SGD - NON-IMPACT

Series/Model:	Scale:	Sheet:	Drawing No.	Rev:
SGD-670	NTS	12 of 22	PGT0128	

INSTALLATION DETAILS

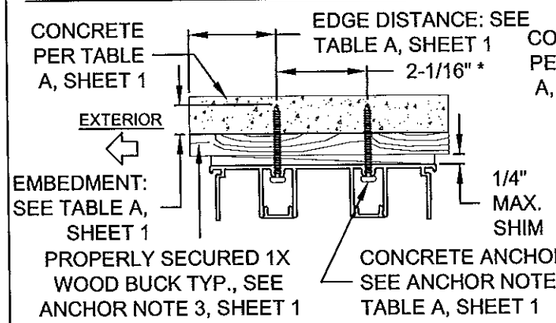

DET Ac 2-TRACK FRAME HEAD CONCRETE INSTALLATION

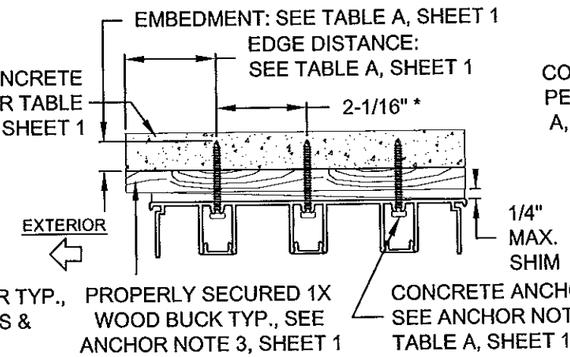

DET Bc 3-TRACK FRAME HEAD CONCRETE INSTALLATION

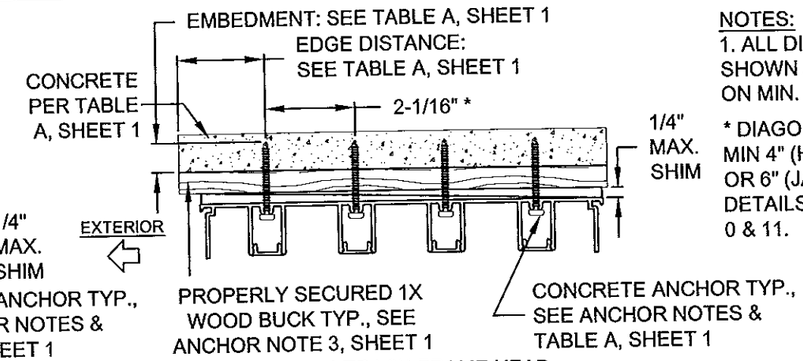

DET Cc 4-TRACK FRAME HEAD CONCRETE INSTALLATION

NOTES:
1. ALL DIMENSIONS SHOWN ARE BASED ON MIN. ALLOWED.

* DIAGONAL O.C. IS MIN 4" (HEAD & SILL) OR 6" (JAMB) SEE DETAILS, SHEETS 0 & 11.

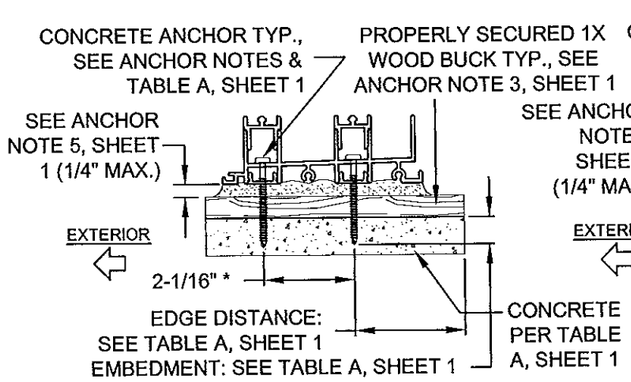

DET Dc 2-TRACK FRAME SILL CONCRETE INSTALLATION

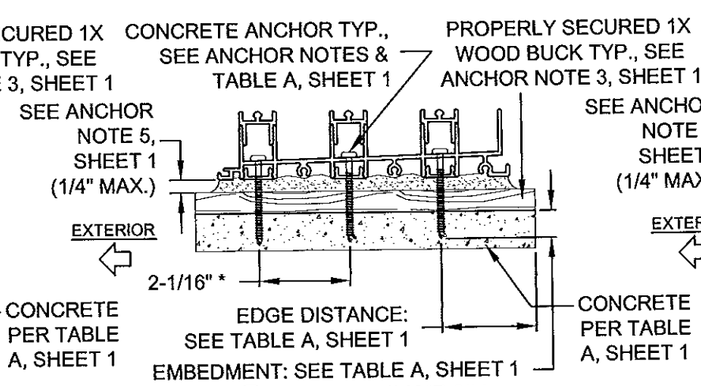

DET Ec 3-TRACK FRAME SILL CONCRETE INSTALLATION

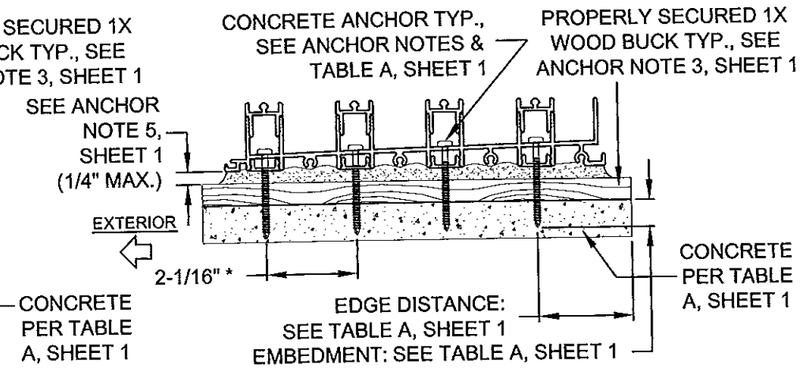

DET Fc 4-TRACK FRAME SILL CONCRETE INSTALLATION

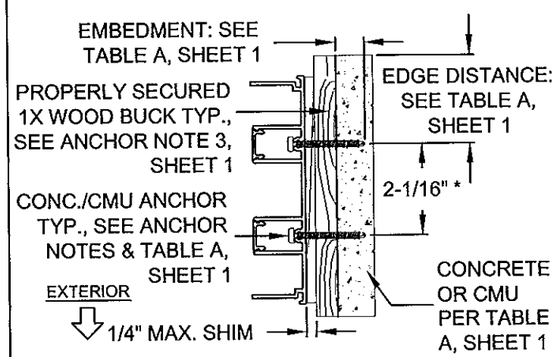

DET Gc 2-TRACK FRAME JAMB CONCRETE/CMU INSTALLATION

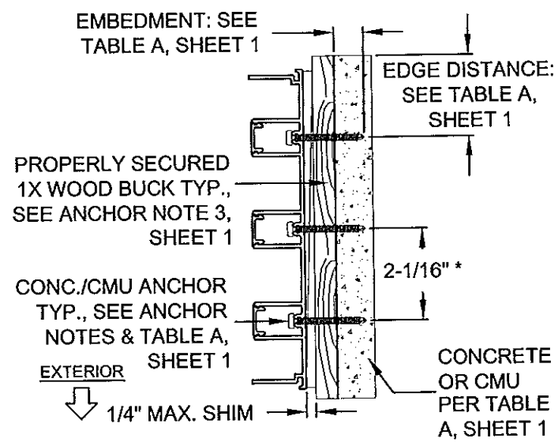

DET Hc 3-TRACK FRAME JAMB CONCRETE/CMU INSTALLATION

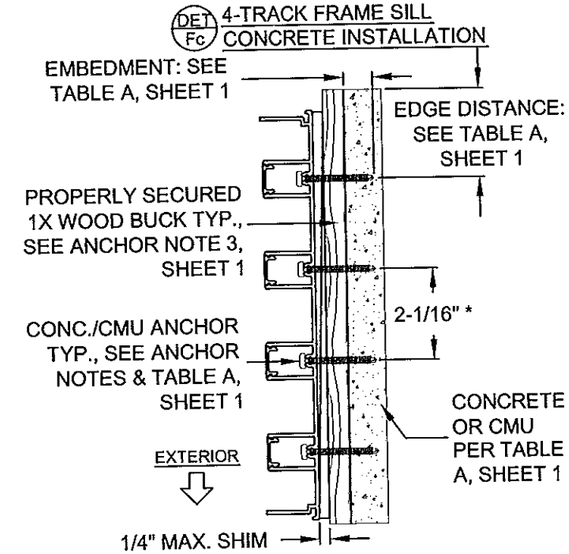

DET Ic 4-TRACK FRAME JAMB CONCRETE/CMU INSTALLATION

PRODUCT REVIEWED as complying with the Florida Building Code
Acceptance No. 14-0123.11
Expiration Date 4/7/20
By [illegible]
Miami-Dade Product Control

ANTHONY LYNN MILLER LICENSE No. 58705 STATE OF FLORIDA PROFESSIONAL ENGINEER
7/30/15
A. LYNN MILLER, P.E.
P.E.# 58705

Revsd By:	Date:	Revisions:	
Revsd By:	Date:	Revisions:	
Revsd By:	Date:	Revisions:	
Drawn By: JR	Date: 02/20/14	Checked By:	Date:

1070 TECHNOLOGY DRIVE
N. VENICE, FL 34275
(941)-480-1600
CERT. OF AUTH. #29296

PGT®

Description: ANCHORAGE DETAILS
Title: SERIES 670 ALUM. SGD - NON-IMPACT

Series/Model:	Scale:	Sheet:	Drawing No.	Rev:
SGD-670	NTS	13 of 22	PGT0128	

INSTALLATION DETAILS

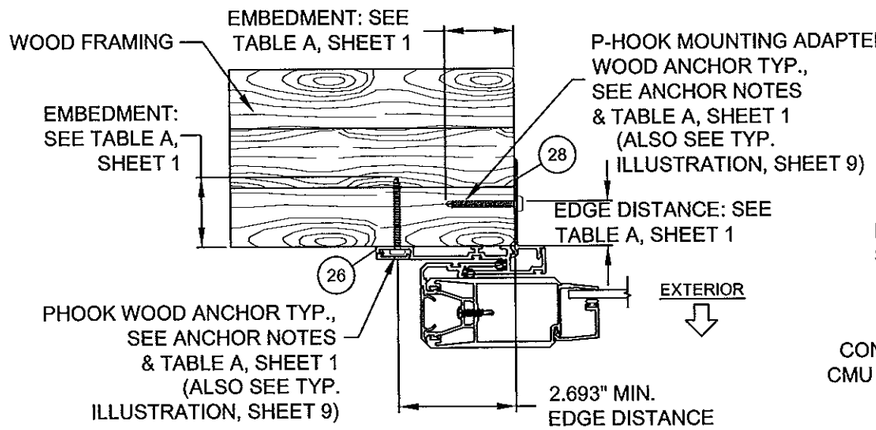

DET Jw P-HOOK FOR USE WITH FLAT SILL RISERS PARTS #18, #20, #22 OR #24, WOOD INSTALLATION (SEE TABLES 1A, 2A & 3A FOR WATER RATINGS)

EXTERIOR MOUNT SHOWN, MAY ALSO BE INSTALLED IN INTERIOR CONDITION

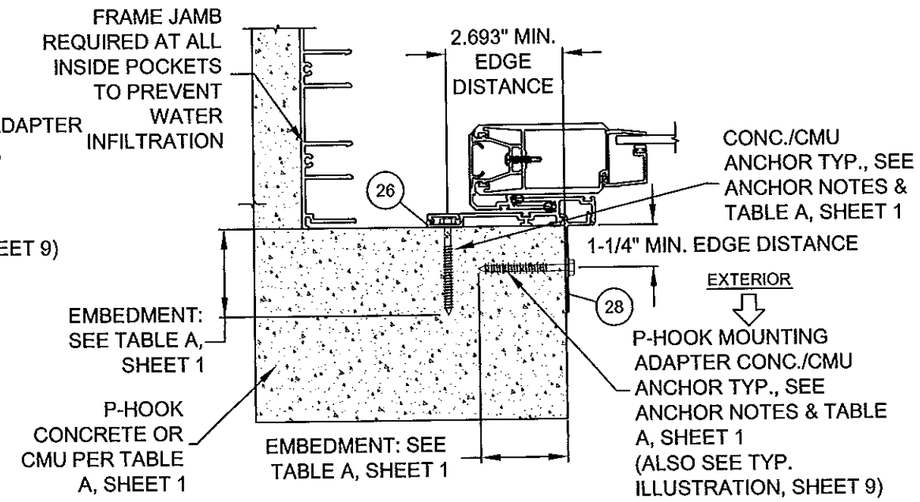

DET Jc P-HOOK FOR USE WITH FLAT SILL RISERS PARTS #18, #20, #22 OR #24, CONCRETE/CMU INSTALLATION (SEE TABLES 1A, 2A & 3A FOR WATER RATINGS)

INTERIOR MOUNT SHOWN, MAY ALSO BE INSTALLED IN EXTERIOR CONDITION

NOTES:

1. ALL DIMENSIONS SHOWN ARE BASED ON MIN. ALLOWED.
2. FIGURES ON THIS SHEET ARE FOR ILLUSTRATIVE PURPOSES ONLY. SEE TABLE A, SHEET 1 FOR ALL APPROVED SUBSTRATES.
3. SEE TABES 1-3, SHEETS 6-8 FOR REQUIRED P-HOOK AND P-HOOK MOUNTING ADAPTER ANCHOR QUANTITIES. ALSO SEE EXAMPLE ON SHEET 9.

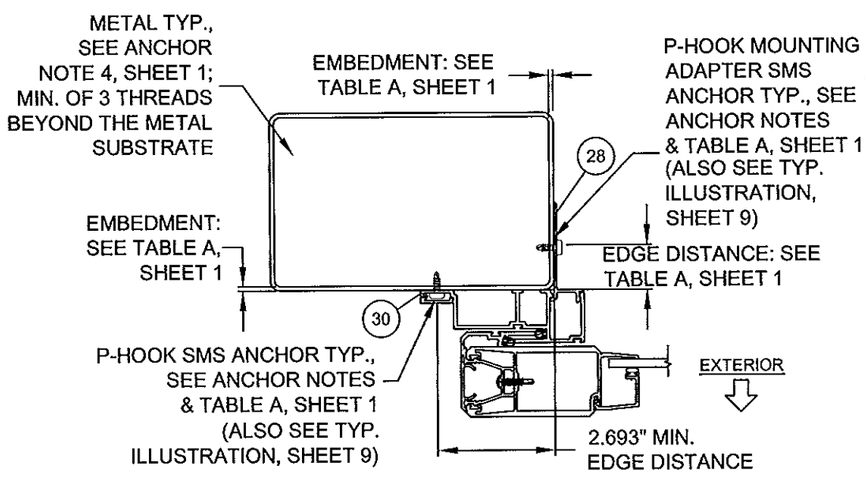

DET Kw P-HOOK FOR USE WITH BOX SILL RISERS PARTS #19, #21, #23 OR #25, METAL INSTALLATION (SEE TABLES 1A, 2A & 3A FOR WATER RATINGS)

EXTERIOR MOUNT ONLY

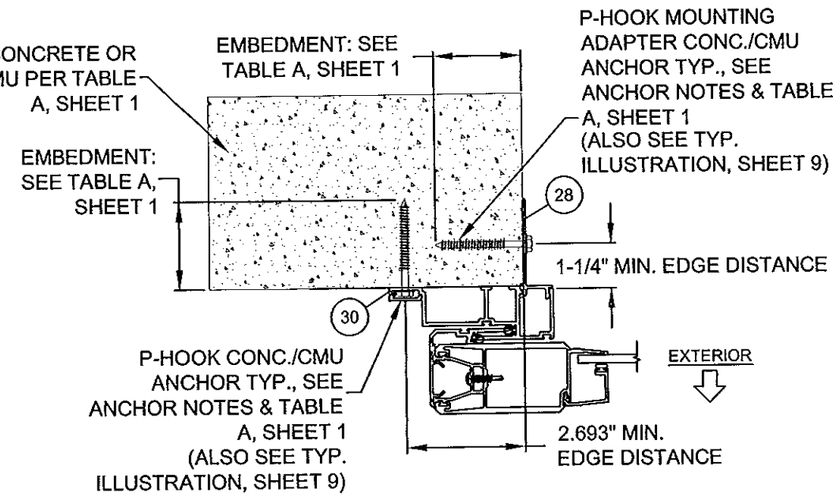

DET Kc P-HOOK FOR USE WITH BOX SILL RISERS PARTS #19, #21, #23 OR #25, CONCRETE INSTALLATION (SEE TABLES 1A, 2A & 3A FOR WATER RATINGS)

EXTERIOR MOUNT ONLY

PRODUCT REVISED as complying with the Florida Building Code.
Acceptance No. 14-0123.11
Expiration Date 4/7/20
By [illegible]
Miami-Dade Product Control

ANTHONY LYNN MILLER
LICENSE
No. 58705
7/30/15
STATE OF FLORIDA
PROFESSIONAL ENGINEER
A. LYNN MILLER, P.E.
P.E.# 58705

Revsd By:	Date:	Revisions:	
Revsd By:	Date:	Revisions:	
Revsd By:	Date:	Revisions:	
Drawn By: JR	Date: 02/20/14	Checked By:	Date:

1070 TECHNOLOGY DRIVE
N. VENICE, FL 34275
(941)-480-1600
CERT. OF AUTH. #29296

PGT®

Description: ANCHORAGE DETAILS

Title: SERIES 670 ALUM. SGD - NON-IMPACT

Series/Model:	Scale:	Sheet:	Drawing No.	Rev:
SGD-670	NTS	14 of 22	PGT0128	

CONFIG. EXAMPLES

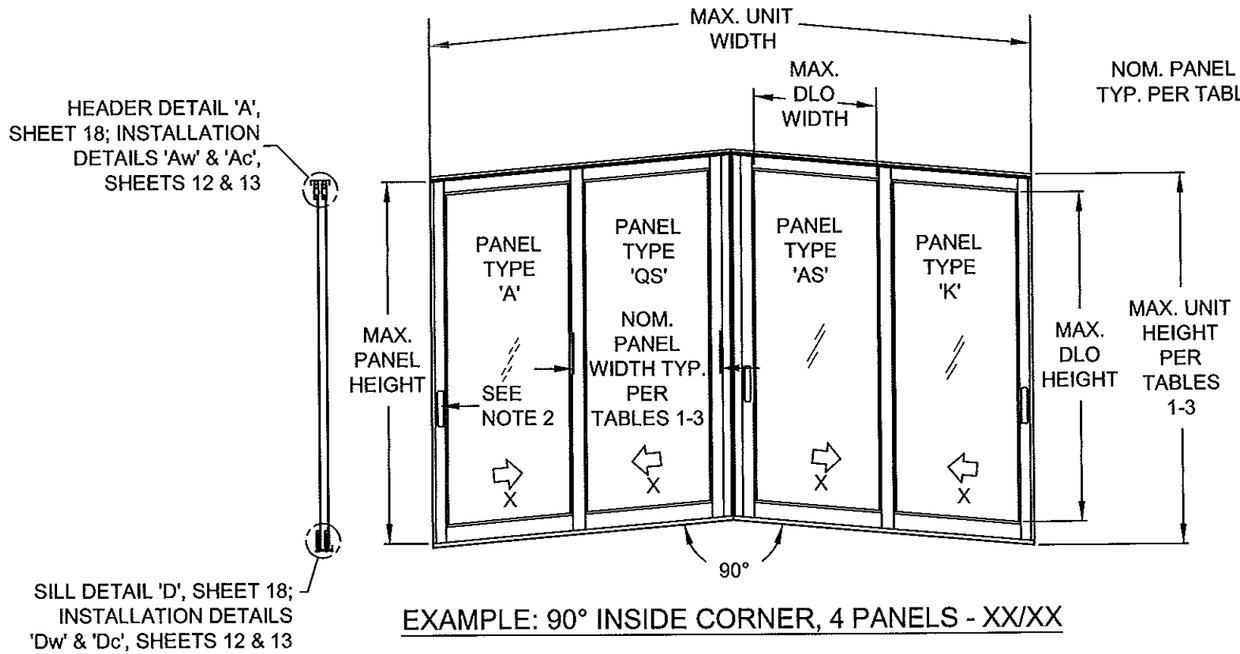

EXAMPLE: 90° INSIDE CORNER, 4 PANELS - XX/XX

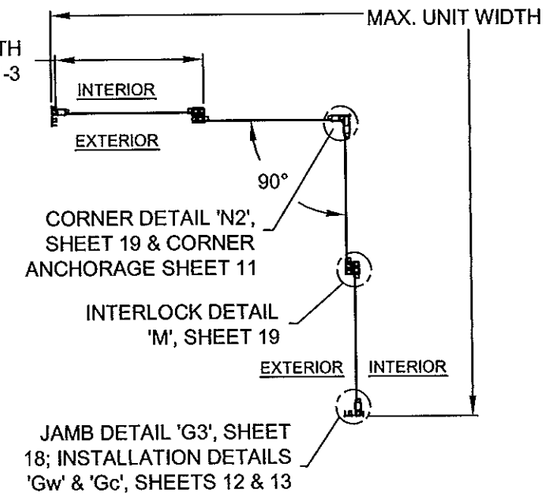

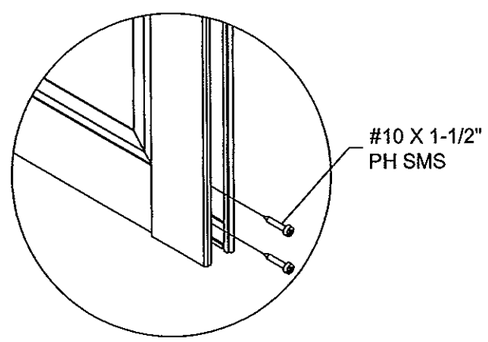

PANEL CORNER DETAIL

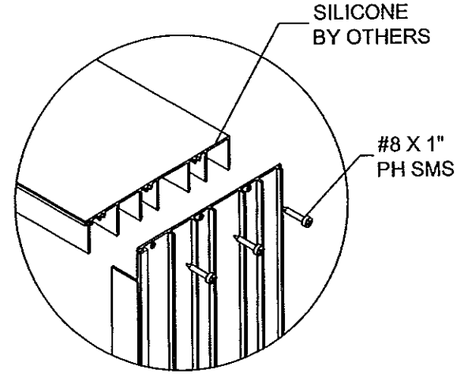

FRAME CORNER DETAIL

DLO WIDTH = NOM. PANEL WIDTH - 7"
DLO HEIGHT = DOOR UNIT HEIGHT - 10.125"
PANEL HEIGHT = DOOR UNIT HEIGHT - 1.866"

PRODUCT APPROVED
as complying with the Florida Building Code
Acceptance No. 14-0123.11
Expiration Date 4/2/2
By [illegible]
Miami Dade/Product Control

NOTES:
1) SEE SHEET 17 FOR INDIVIDUAL PANEL CONFIGURATIONS AS APPLICABLE. SEE DP/ANCHOR TABLES, SHEETS 6-8 FOR MAX. PANEL HEIGHT AND WIDTH. SEE SHEETS 18 & 19 FOR SECTION DETAILS AND SHEETS 12-14 FOR INSTALLATION DETAILS.
2) (1) LOCK (ITEMS 75 & 107-110) AT EACH LOCKSTILE, LOCKING INTO KEEPER (ITEM 103) AT FRAME JAMB OR ASTRAGAL.
3) PLEASE SEE APPLICABLE ASTRAGAL & INTERLOCK COMBINATIONS PER DP/ANCHOR TABLES.

ANTHONY LYNN MILLER
LICENSE
No. 58705
1/30/15
STATE OF FLORIDA
PROFESSIONAL ENGINEER
A. LYNN MILLER, P.E.
P.E.# 58705

Revsd By:	Date:	Revisions:	
Revsd By:	Date:	Revisions:	
Revsd By:	Date:	Revisions:	
Drawn By: JR	Date: 02/20/14	Checked By:	Date:

1070 TECHNOLOGY DRIVE
N. VENICE, FL 34275
(941)-480-1600
CERT. OF AUTH. #29296

PGT®

Description: ANCHORAGE DETAILS / EXAMPLE ELEVATION
Title: SERIES 670 ALUM. SGD - NON-IMPACT

Series/Model:	Scale:	Sheet:	Drawing No.	Rev:
SGD-670	NTS	15 of 22	PGT0128	

CONFIG. EXAMPLES

FOR ALL DETAILS ON THIS SHEET, SEE NOTES ON SHEET 15

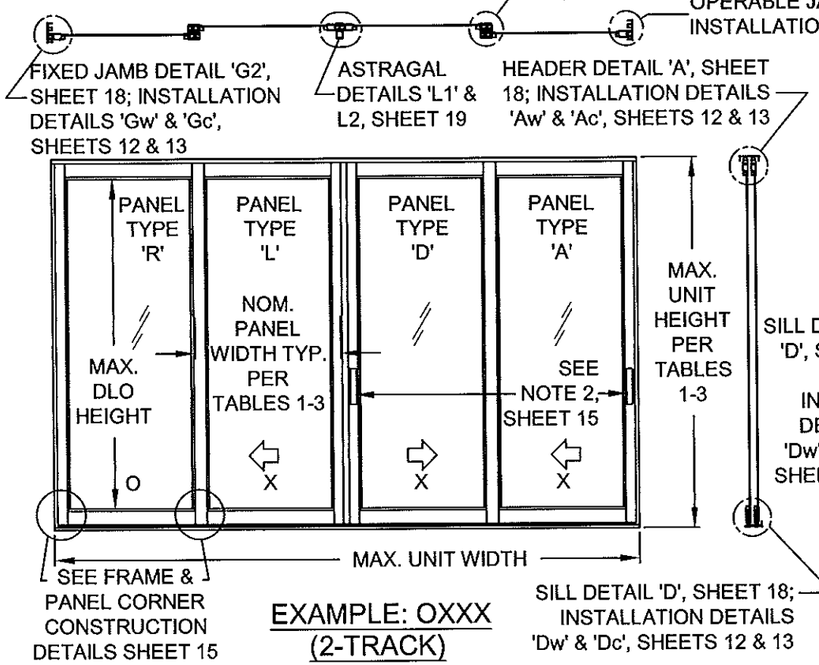

EXAMPLE: OXXX (2-TRACK)

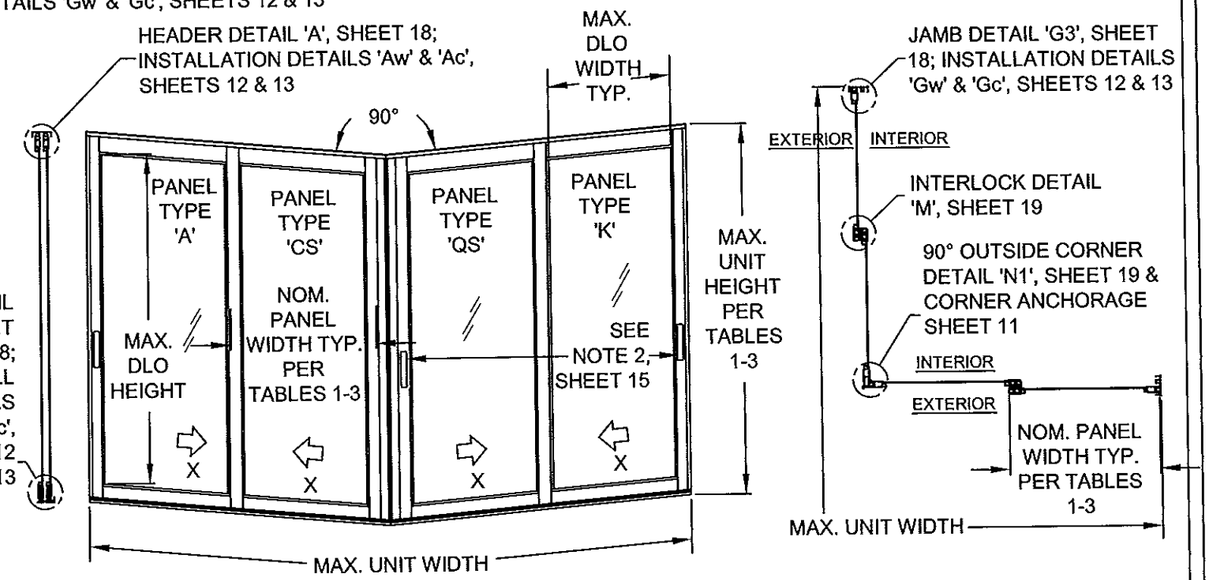

EXAMPLE: 90° OUTSIDE CORNER - XX/XX (2-TRACK)

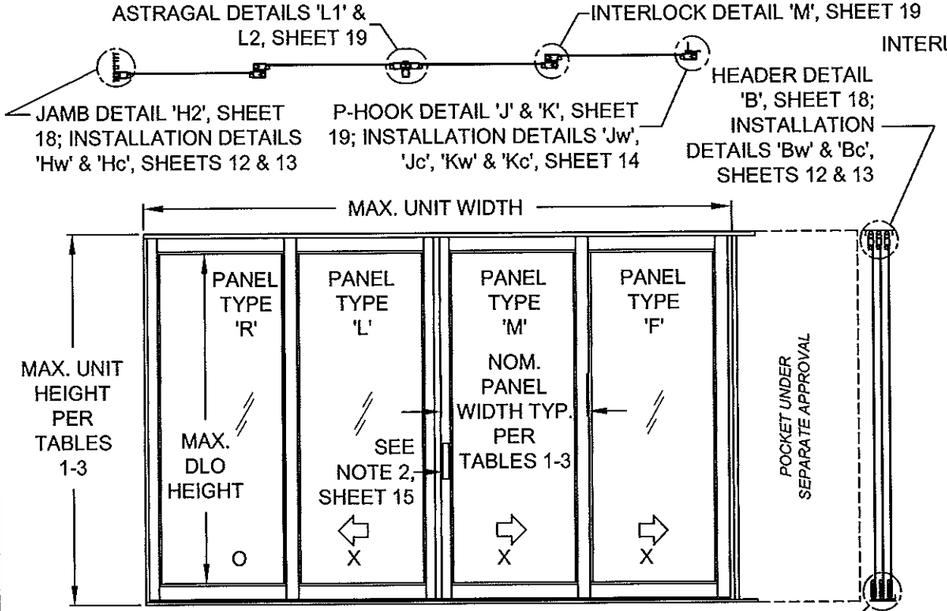

EXAMPLE: OXXXp (3-TRACK, RIGHT POCKET)

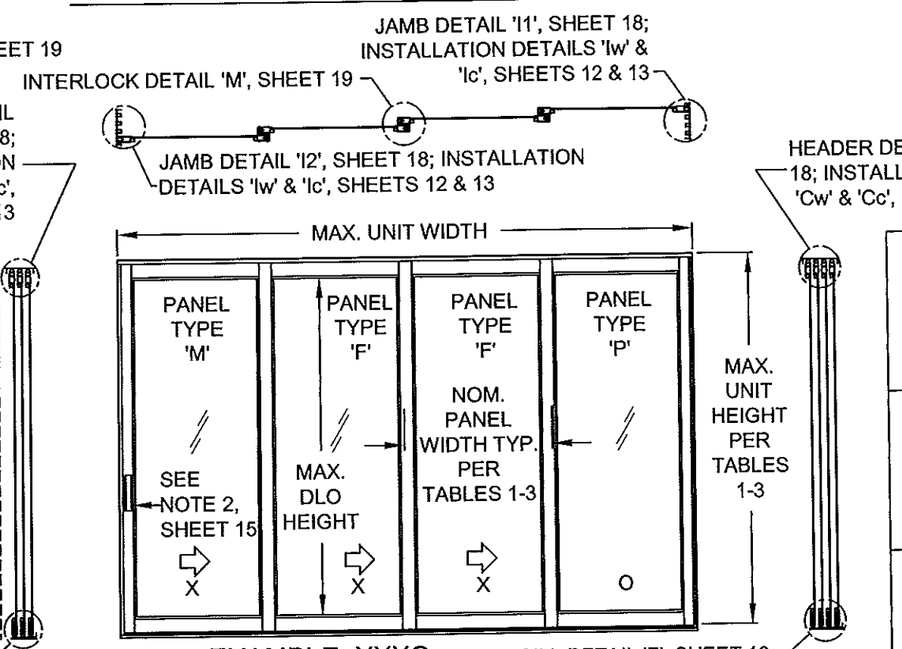

EXAMPLE: XXXO (4-TRACK, BY-PASS)

PRODUCT REVISED as complying with the Florida Building Code Acceptance No. 14-0123.11 Expiration Date 4/7/20 By [signature] Miami Dade Product Control

ANTHONY LYNN MILLER LICENSE No. 58705 STATE OF FLORIDA PROFESSIONAL ENGINEER 1/30/15

A. LYNN MILLER, P.E.
P.E.# 58705

Revsd By:	Date:	Revisions:	
Revsd By:	Date:	Revisions:	
Revsd By:	Date:	Revisions:	
Drawn By: JR	Date: 02/20/14	Checked By:	Date:

1070 TECHNOLOGY DRIVE
N. VENICE, FL 34275
(941)-480-1600
CERT. OF AUTH. #29296

PGT®

Description: EXAMPLE ELEVATIONS

Title: SERIES 670 ALUM. SGD - NON-IMPACT

Series/Model:	Scale:	Sheet:	Drawing No.	Rev:
SGD-670	NTS	16 of 22	PGT0128	

PANEL'S LEFT STILE TYPE \ PANEL'S RIGHT STILE TYPE	SINGLE INTERLOCK OUT	SINGLE INTERLOCK IN	FIXED STILE	LOCKSTILE W/ HANDLE	ASTRAGAL BOX OUT	ASTRAGAL BOX IN	ASTRAGAL BOX OUT W/ HANDLE	ASTRAGAL BOX IN W/ HANDLE	INT CORNER 90 LOCKSTILE W/ HANDLE #120	EXT CORNER 90 LOCKSTILE W/ HANDLE #119	EXT CORNER 90 RECEIVER W/ HANDLE #61 #118	INT CORNER 90 RECEIVER W/ HANDLE #61 #118	EXT CORNER 90 RECEIVER #61 #118	EXT CORNER 135 RECEIVER W/ HANDLE #61 #31	INT CORNER 135 RECEIVER W/ HANDLE #61 #31
SINGLE INTERLOCK OUT		F	PP	K			L (BOX OUT)		TR	TQ	TC	TA		TV	TW
SINGLE INTERLOCK IN	B	E	P	A			C (BOX OUT	C (BOX IN)	IC	SQ	SC	SA		SV	SW
FIXED STILE	RR	R			S (BOX OUT)	S (BOX IN)						FD	FC	FV	FW
LOCKSTILE W/ HANDLE	D	M			J (BOX OUT)	J (BOX IN)									
ASTRAGAL BOX OUT W/ HANDLE	LR (BOX OUT)														
ASTRAGAL BOX IN W/ HANDLE		N (BOX IN)													
ASTRAGAL BOX OUT			T (BOX OUT)	U (BOX OUT)											
ASTRAGAL BOX IN			T (BOX IN)	U (BOX IN)											
INT CORNER 90 LOCKSTILE W/ HANDLE #120	RT	CI													
EXT CORNER 90 LOCKSTILE W/ HANDLE #119	QT	QS													
EXT CORNER 90 RECEIVER W/ HANDLE #61 #118	CT	CS													
INT CORNER 90 RECEIVER W/ HANDLE #61 #118	AT	AS	DF												
EXT CORNER 90 RECEIVER #118 #61			CF												
EXT CORNER 135 RECEIVER W/ HANDLE #31 #61	VT	VS	VF												
INT CORNER 135 RECEIVER W/ HANDLE #31 #61	WT	WS	WF												

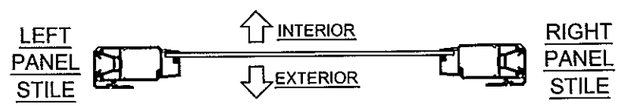

PANEL "E" SHOWN. SEE TABLE FOR OTHER PANEL TYPES AND APPLICABLE STILE/ASTRAGAL REQUIREMENTS.

PANEL NOTES:

1. SEE DP TABLES 1-3, SHEETS 6-8 FOR PANEL SIZES & DESIGN PRESSURE.
2. PANEL TYPES NOT SHOWN OR CROSSED OFF ARE NOT REQUIRED FOR ANY CONFIGURATIONS AND ARE NOT AVAILABLE.
3. 90° ASTRAGALS TO USE HEAVY-DUTY STILES (#61), CORNER RECEIVER (#118) AND EITHER EXTERIOR (#119) OR INTERIOR (#120) CORNER ASTRAGALS.
4. 135° ASTRAGALS TO USE HEAVY-DUTY STILES (#61) AND CORNER ADDON (#31).

SILL RISERS OPTIONS

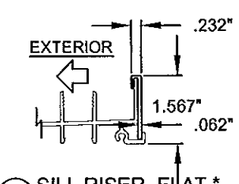

(18*) SILL RISER, FLAT * FLUSH, 1-1/2"

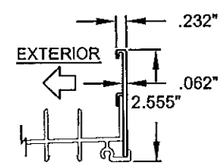

(20) SILL RISER, FLAT LOW, 2-1/2"

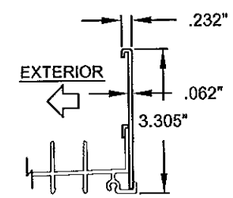

(22) SILL RISER, FLAT MEDIUM, 3-1/4"

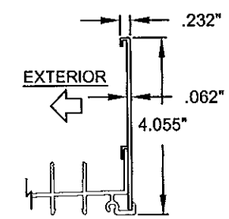

(24) SILL RISER, FLAT HIGH, 4"

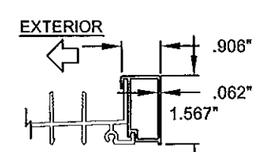

(19*) SILL RISER, BOX * FLUSH, 1-1/2"

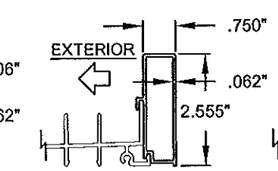

(21) SILL RISER, BOX LOW, 2-1/2"

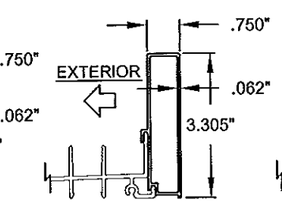

(23) SILL RISER, BOX MEDIUM, 3-1/4"

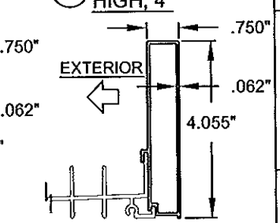

(25) SILL RISER, BOX HIGH, 4"

* NOT VALID FOR WATER INFILTRATION RESISTANCE REQUIREMENTS, SEE SHEETS 6-8

PRODUCT REVIEWED as complying with the Florida Building Code
Acceptance No. 14-0123.11
Expiration Date 4/7/20
By [signature]
Miami Dade Product Control

ANTHONY LYNN MILLER LICENSE No. 58705 STATE OF FLORIDA PROFESSIONAL ENGINEER
1/30/15
A. LYNN MILLER, P.E.
P.E.# 58705

Revsd By:	Date:	Revisions:	
Revsd By:	Date:	Revisions:	
Revsd By:	Date:	Revisions:	
Drawn By: JR	Date: 02/20/14	Checked By:	Date:

1070 TECHNOLOGY DRIVE
N. VENICE, FL 34275
(941)-480-1600
CERT. OF AUTH. #29296

PGT®

Description: PANEL TYPES
Title: SERIES 670 ALUM. SGD - NON-IMPACT

Series/Model:	Scale:	Sheet:	Drawing No.	Rev:
SGD-670	NTS	17 of 22	PGT0128	

ASSEMBLY DETAILS

(SEE SHEETS 12-14 FOR FOR INSTALLATION DETAILS)

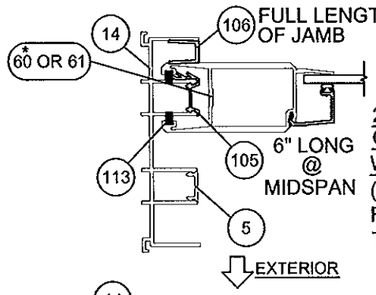

DET G1 2-TRACK JAMB CLIP #105 W/ RETAINER #106 (SHOWN WITH FIXED PANEL TO THE INTERIOR)

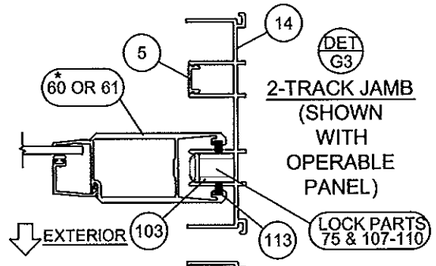

DET G3 2-TRACK JAMB (SHOWN WITH OPERABLE PANEL)

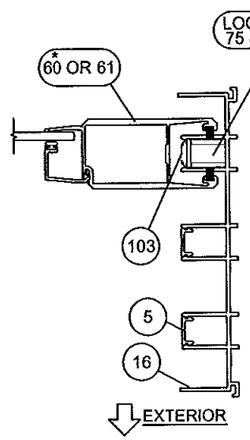

DET H1 3-TRACK JAMB (SHOWN WITH OPERABLE PANEL)

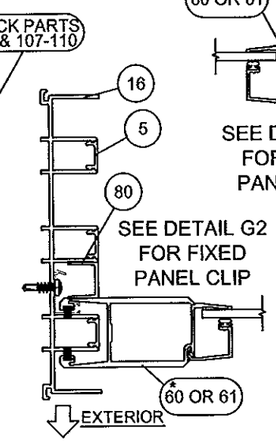

DET H2 3-TRACK JAMB (SHOWN WITH FIXED PANEL TO THE EXTERIOR)

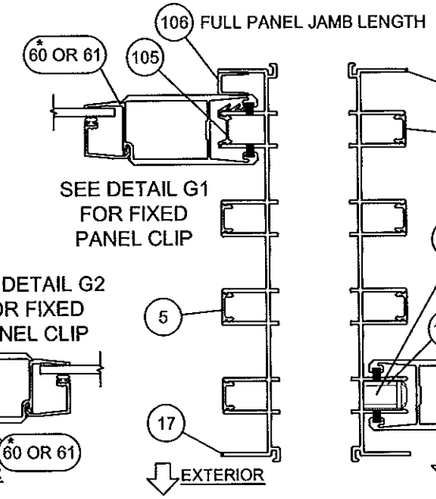

DET I1 4-TRACK JAMB (SHOWN WITH FIXED PANEL TO THE INTERIOR)

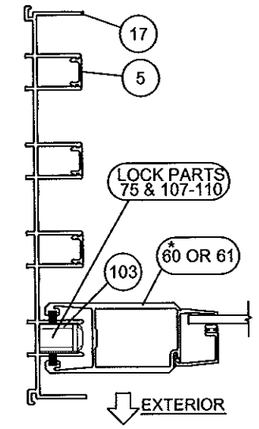

DET I2 4-TRACK JAMB (SHOWN WITH OPERABLE PANEL)

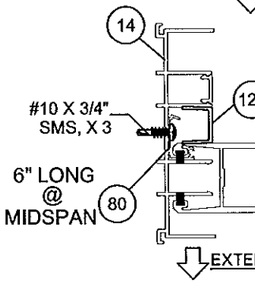

DET G2 2-TRACK JAMB CLIP #80 OR #105 W/ RETAINER #123 (SHOWN WITH FIXED PANEL TO THE EXTERIOR)

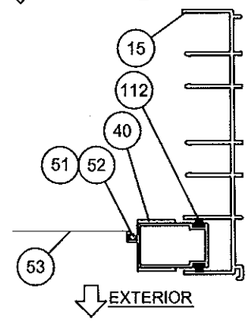

DET G4 2-TRACK JAMB W/ SCREEN

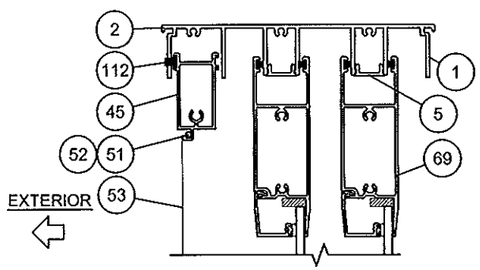

SHOWN WITH OPT. SCREEN TRACK

DET A 2-TRACK W/SCREEN FRAME HEAD

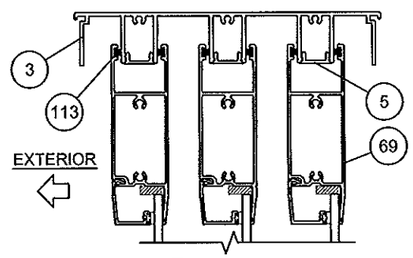

DET B 3-TRACK FRAME HEAD

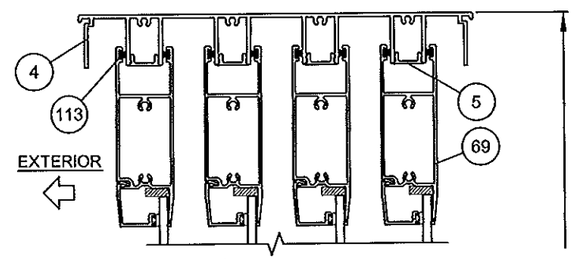

DET C 4-TRACK FRAME HEAD

MAX. UNIT HEIGHT PER TABLES 1-3

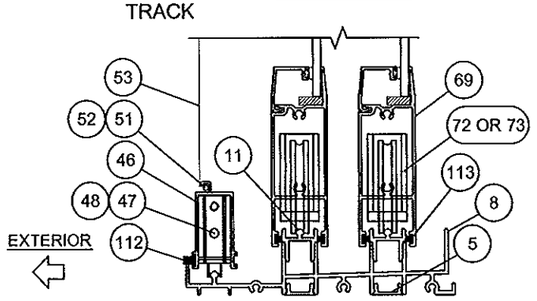

DET D 2-TRACK W/SCREEN FRAME SILL

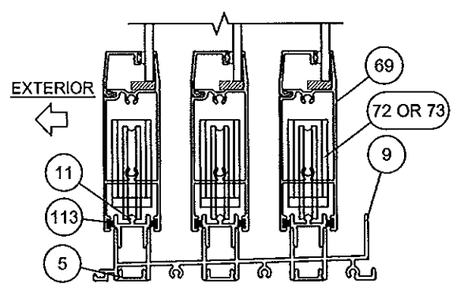

DET E 3-TRACK FRAME SILL

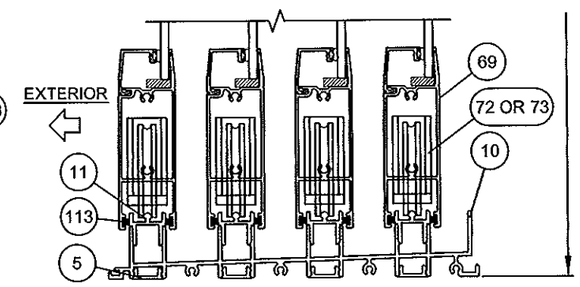

DET F 4-TRACK FRAME SILL

* ITEM 61 SHOWN, ITEM 60 ALSO APPLICABLE, SEE TABLES 1-3, SHEETS 6-8 FOR DP (PSF) ASSOCIATED WITH STILE.

PRODUCT REVISED as complying with the Florida Building Code
Acceptance No. 14-0123.11
Expiration Date 4/7/20
By [illegible]
Miami-Dade Product Control

ANTHONY LYNN MILLER LICENSE No. 58705 STATE OF FLORIDA PROFESSIONAL ENGINEER
1/30/15

A. LYNN MILLER, P.E.
P.E.# 58705

Revsd By:	Date:	Revisions:	
Revsd By:	Date:	Revisions:	
Revsd By:	Date:	Revisions:	
Drawn By: JR	Date: 02/20/14	Checked By:	Date:

1070 TECHNOLOGY DRIVE
N. VENICE, FL 34275
(941)-480-1600
CERT. OF AUTH. #29296

PGT®

Description: VERTICAL SECTION DETAILS

Title: SERIES 670 ALUM. SGD - NON-IMPACT

Series/Model:	Scale:	Sheet:	Drawing No.	Rev:
SGD-670	NTS	18 of 22	PGT0128	

ASSEMBLY DETAILS

(SEE SHEETS 12-14 FOR FOR INSTALLATION DETAILS)

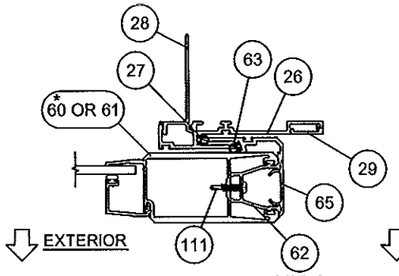

DET J P-HOOK FOR FLAT SILLS (EXT. OR INT. MOUNT)

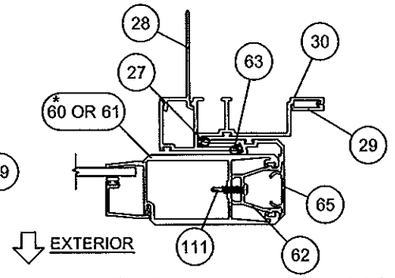

DET K P-HOOK FOR BOX SILLS EXT. MOUNT ONLY

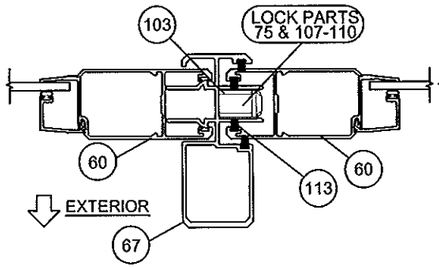

DET L1 STANDARD ASTRAGAL #67 WITH STANDARD STILES #60

EXTERIOR BOX ASTRAGAL SHOWN (BOX-OUT) MAY ALSO BE INSTALLED TOWARDS INTERIOR (BOX-IN)

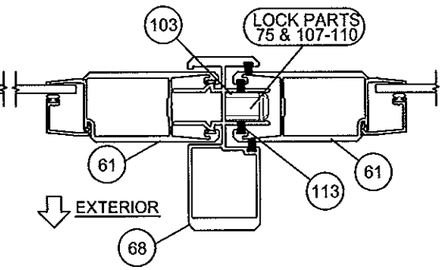

DET L2 HEAVY-DUTY ASTRAGAL #68 WITH HEAVY-DUTY STILES #61

EXTERIOR BOX ASTRAGAL SHOWN (BOX-OUT) MAY ALSO BE INSTALLED TOWARDS INTERIOR (BOX-IN)

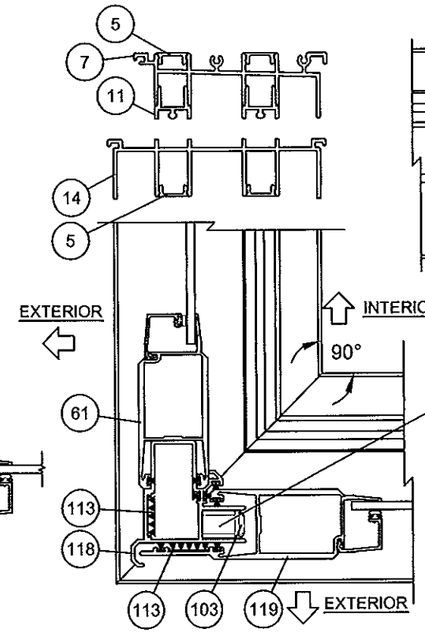

DET N1 90° OUTSIDE CORNER 2-TRACK SHOWN

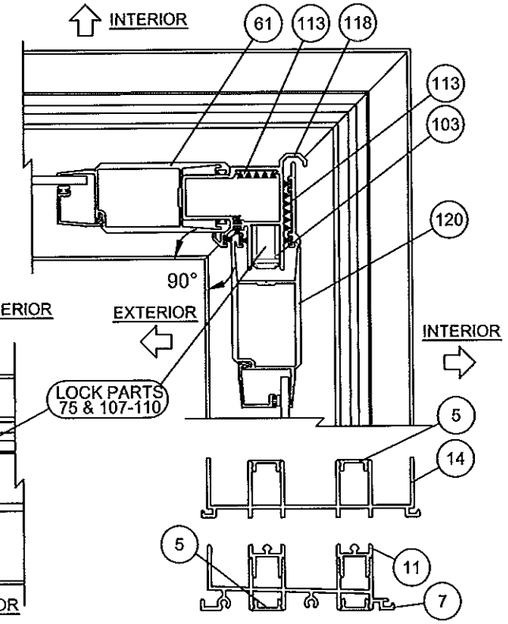

DET N2 90° INSIDE CORNER 2-TRACK SHOWN

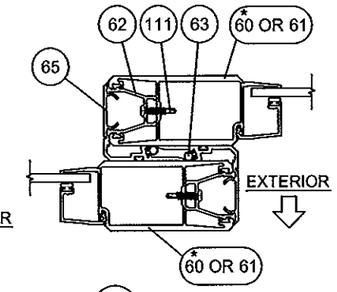

DET M INTERLOCK

* ITEM #61 (HEAVY-DUTY STILE) SHOWN, ITEM #60 (STANDARD STILE) ALSO APPLICABLE, SEE TABLES 1-3, SHEETS 6-8 FOR DP (PSF) ASSOCIATED WITH STILES.

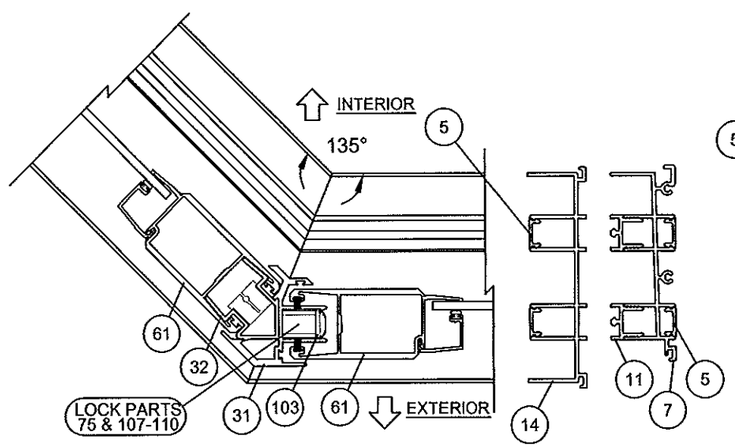

DET O1 135° OUTSIDE CORNER 2-TRACK SHOWN

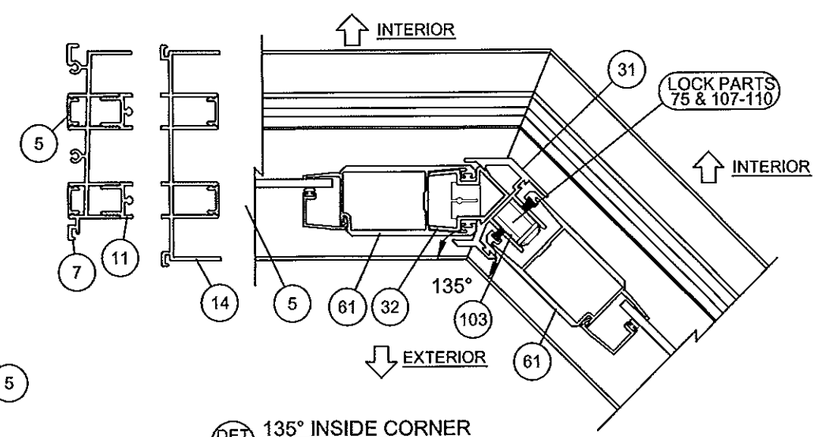

DET O2 135° INSIDE CORNER 2-TRACK SHOWN

PRODUCT REVISED
as complying with the Florida
Building Code
Acceptance No. 14-0123.11
Expiration Date 4/7/20
By [illegible]
Manager Date Product Control

ANTHONY LYNN MILLER
LICENSE
No. 58705
1/30/15
STATE OF FLORIDA
PROFESSIONAL ENGINEER

A. LYNN MILLER, P.E.
P.E.# 58705

Revsd By:	Date:	Revisions:	
Revsd By:	Date:	Revisions:	
Revsd By:	Date:	Revisions:	
Drawn By: JR	Date: 02/20/14	Checked By:	Date:

1070 TECHNOLOGY DRIVE
N. VENICE, FL 34275
(941)-480-1600
CERT. OF AUTH. #29296

PGT®

Description: HORIZONTAL SECTION DETAILS, CORNERS

Title: SERIES 670 ALUM. SGD - NON-IMPACT

Series/Model:	Scale:	Sheet:	Drawing No.	Rev:
SGD-670	NTS	19 of 22	PGT0128	

Item #	PGT Dwg. #	PGT #	Description
1	17306	617306	2-TRACK HEAD
2	17303	617303	2-TRACK HEAD WITH SCREEN RAIL
3	17309	617309	3-TRACK HEAD
4	17312	617312	4-TRACK HEAD
5	17314	617314	FRAME SCREW COVER
6	17317	617317	FRAME HEAD/JAMB SCREEN ADD-ON
7	17304	617304	2-TRACK SILL
8	17301	617301	2-TRACK SILL WITH SCREEN RAIL
9	17307	617307	3-TRACK SILL
10	17310	617310	4-TRACK SILL
11	17313	617313	FRAME SILL TRACK INSERT
12	17315	617315	FRAME SILL SCREEN ADD-ON (SEE NOTE 3)
13	17316	617316	FRAME SILL SCREEN END ADD-ON (SEE NOTE 3)
14	17305	617305	2-TRACK JAMB
15	17302	617302	2-TRACK JAMB WITH SCREEN RAIL
16	17308	617308	3-TRACK JAMB
17	17311	617311	4-TRACK JAMB
18	17322	617322	SILL RISER - FLAT, FLUSH, 1-1/2"
19	17319	617319	SILL RISER - BOX, FLUSH, 1-1/2"
20	17321	617321	SILL RISER - FLAT, LOW, 2-1/2"
21	17318	617318	SILL RISER - BOX, LOW, 2-1/2"
22	17355	617355	SILL RISER - FLAT, MEDIUM, 3-1/4"
23	17354	617354	SILL RISER - BOX, MEDIUM, 3-1/4"
24	17323	617323	SILL RISER - FLAT, HIGH, 4"
25	17320	617320	SILL RISER - BOX, HIGH, 4"
26	17333	617333	POCKET P-HOOK
27	7070	67070	NEOPRENE BULB WSTP FOR P-HOOK
28	17334	617334	POCKET P-HOOK MOUNT
29	17335	617335	P-HOOK COVER
30	17348	617348	POCKET P-HOOK FOR BOX RISER
31	17376	617376	135 CORNER
32	17378	617378	135 FIXED MOUNT
ITEMS 40-53 ARE SCREEN PARTS:			
40	4319	612258	SCREEN SIDE RAIL - LOCKSTILE
41		7LOCKWGSK	SCREEN LOCKSET
42		41818	SCREEN KEEPER SPACER SET
43	8152	68152	SCREEN INTERLOCK ADAPTER
44	4428	64428	SCREEN DOUBLE INTERLOCK
45	4317	612256	SCREEN TOP RAIL
46	4318	612257	SCREEN BOTTOM RAIL
47	668	7SRAZ	STANDARD ROLLER
48	668	7SRAX	STANDARD ROLLER - ST. STL.
49	4344	64344	SCREEN ASTRAGAL
50	17349	617349	OXO SCREEN ASTRAGAL ADAPTER
51	1692	61692	SCREEN SPLINE - .165"
52	1694	61694	SCREEN SPLINE - .150"
53		61816C20	SCREEN CLOTH
54	1725		1/2" X 4" X 1/16" SET. BLOCK, NEOPRENE 85 +/-5
55	1726		1" X 4" X 1/16" SET. BLOCK, NEOPRENE 85 +/-5

Item #	PGT Dwg. #	PGT #	Description
56			QUANEX/TRUSEAL DURASEAL SPACER (COMPOSITE SEALANT/DESSICANT)
60	17325	617325	PANEL STILE
61	17326	617326	PANEL STILE (HEAVY DUTY)
62	17327	617327	INTERLOCK ADAPTOR
63	1225	6TP248	VINYL BULB WSTP. - THIN (INSIDE INTERLOCK)
64	1729	71729	SILL END WEATHERSTRIP PAD
65	17328	617328	INTERLOCK SCREW COVER
67	17329	617329	ASTRAGAL
68	17339	617339	HEAVY DUTY ASTRAGAL
69	17324	617324	TOP & BOTTOM RAIL
70	17350	417350	WEATHERSTRIP EXTENSION (INJECTION MOLDED)
71	1695	71695	1-1/2" X 1" X 3/4" HIGH FIN SEAL DUST PLUGS
72	8153	78153X	TANDEM ST. STL. ROLLER ASSY.
73	8153	78153N	TANDEM NYLON ROLLER ASSY.
74		SILICONE	DOW-899, DOW-995 OR GE-7700
75	8185	78185X	GEMINI MORTICE 3-PLY DUAL LOCK W/LONG TRIM PLATE
76		71032X1FPFX	#10-32 X 1" FL. SS SCREW W/ TYPE "F" TIP
77		7103239	10-32 STEEL ZINC U-NUT
78	17358	617358	3/16 & 1/4" BEAD
79	17357	617357	1" IG BEAD
80	17359	617359	7/16" BEAD / FIXED PANEL CLIP
82	1224	6TP247K	VINYL BULB WEATHERSTRIP
83	61745	1745	LOWE INC, 1/2" X 1/16" SGL. SIDE ADH. TAPE, POLYETH.
100	8052	48052	ROLLER ADJ. HOLE PLUG
101		72087	JAMB BUMPER
102	1696	71696	DUST PLUG
103	8186	78186X	1" KEEPER
104	653	7SDKEEP	SCREEN LOCK KEEPER
105	17344	617344	FIXED PANEL CLIP - 6" LONG
106	17352	617352	FIXED PANEL RETAINER - 9/16"
107	1739	71739	HANDLE KIT - INTERIOR RAISED WITH THUMB TURN, USED WITH #75
108	1740	71740	HANDLE KIT - RAISED EXTERIOR HANDLE, USED WITH #75
109	1731	78162SN	HANDLE KIT - RECESSED INT. WITH THUMB TURN, USED WITH #75
110	1732	78178	HANDLE KIT - RECESSED EXTERIOR PULL, USED WITH #75
111		710X34PPSDAX	#10 X 3/4" PH. PN. TEK - S.S.
112	1235	67S16	WSTP, .270 X .170 - FIN SEAL
113	1712	64066	.187" X .230" FINSEAL
114		710X115PPX	#10 X 1-1/2"
115		710XPPT	#10 X 1"
116		720X1X	#14-20 X 1" S.S.
117		720X112X	#14-20 X 1-1/2" S.S.
118	17336	617336	90 DEGREE CORNER RECEIVER
119	17337	617337	90 DEGREE OUTSIDE CORNER ASTRAGAL
120	17338	6117338	90 DEGREE INSIDE CORNER ASTRAGAL
123	17352	617352	FIXED PANEL RETAINER, 7/8"

NOTES:
1) ALL ALUMINUM = 6063-T6

2) ITEMS # 33-39, 57-59, 66, 81, 84-99, 121 & 122 ARE NOT USED AND ARE NOT PART OF THIS APPROVAL.

3) USE OF #12 OR #13 REQUIRES MIN. #10 SMS OR 3/16" MASONRY ANCHORS @ 24" MAX. O.C.

PRODUCT REVISED
as complying with the Florida
Building Code
Acceptance No. 14-0123.11
Expiration Date 4/7/20
By [illegible]
Miami Dade Product Control

ANTHONY LYNN MILLER
LICENSE
No. 58705
STATE OF
FLORIDA
PROFESSIONAL ENGINEER
1/30/15
A. LYNN MILLER, P.E.
P.E.# 58705

Revsd By:	Date:	Revisions:	
Revsd By:	Date:	Revisions:	
Revsd By:	Date:	Revisions:	
Drawn By: JR	Date: 02/20/14	Checked By:	Date:

1070 TECHNOLOGY DRIVE
N. VENICE, FL 34275
(941)-480-1600
CERT. OF AUTH. #29296

PGT®

Description: PARTS LIST
Title: SERIES 670 ALUM. SGD - NON-IMPACT

Series/Model:	Scale:	Sheet:	Drawing No.	Rev:
SGD-670	NTS	20 of 22	PGT0128	

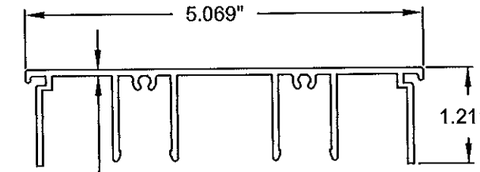

1 2-TRACK HEAD
(6063-T6 AL)

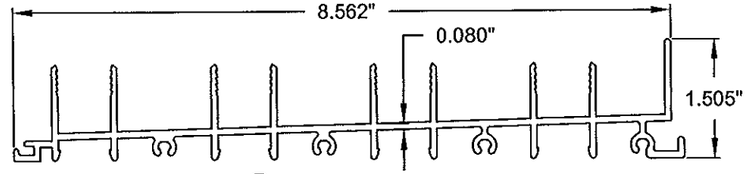

10 4-TRACK SILL
(6063-T6 AL)

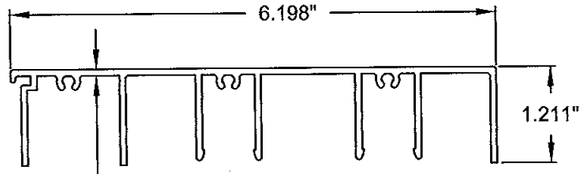

2 2-TRACK HEAD W/ SCREEN TRACK
(6063-T6 AL)

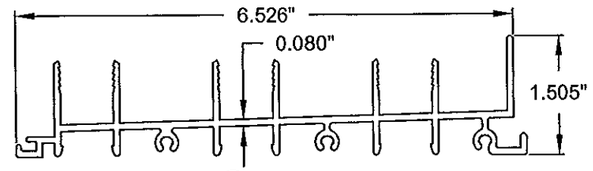

9 3-TRACK SILL
(6063-T6 AL)

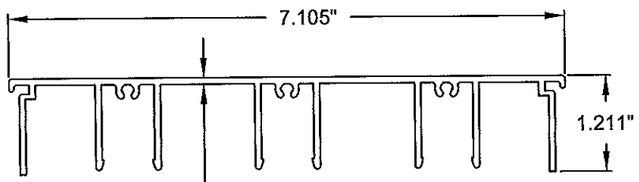

3 3-TRACK HEAD
(6063-T6 AL)

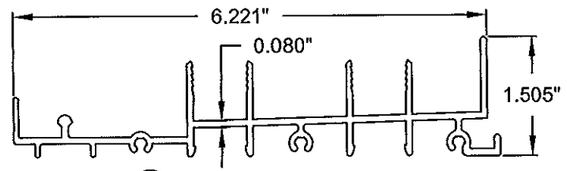

8 2-TRACK SILL W/ SCREEN TRACK
(6063-T6 AL)

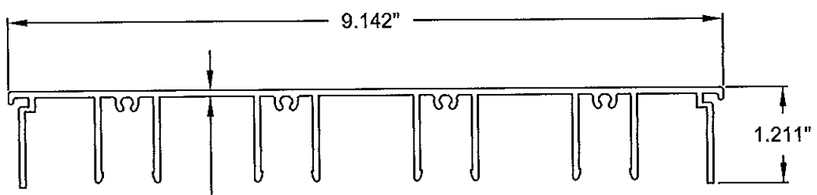

4 4-TRACK HEAD
(6063-T6 AL)

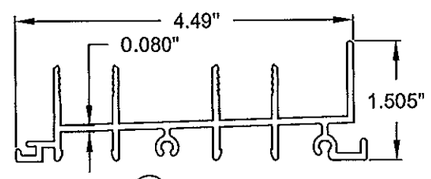

7 2-TRACK SILL
(6063-T6 AL)

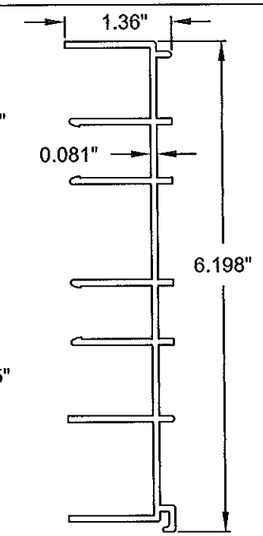

15 2-TRACK JAMB W/ SCREEN TRACK
(6063-T6 AL)

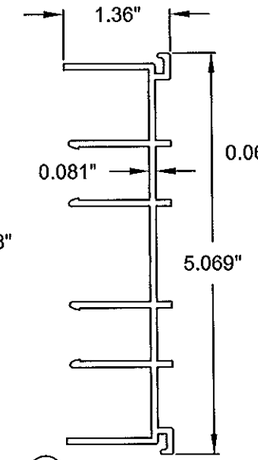

14 2-TRACK JAMB
(6063-T6 AL)

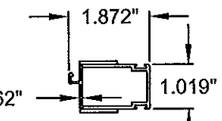

40 SCREEN STILE
(6063-T6 AL)

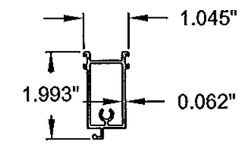

45 SCREEN TOP RAIL
(6063-T6 AL)

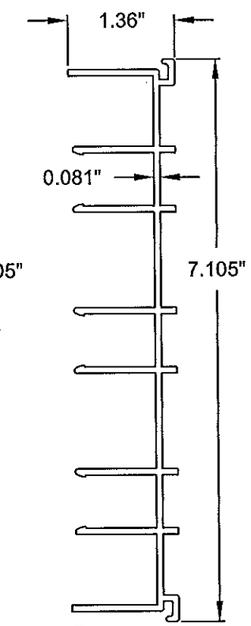

16 3-TRACK JAMB
(6063-T6 AL)

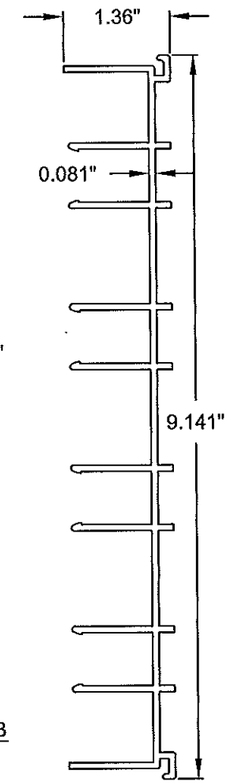

17 4-TRACK JAMB
(6063-T6 AL)

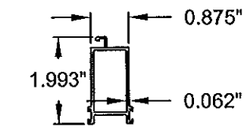

46 SCREEN BOTTOM RAIL
(6063-T6 AL)

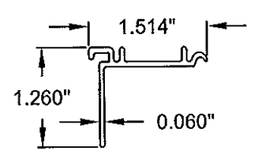

6 FRAME HEAD/JAMB SCREEN ADD-ON
(6063-T6 AL)

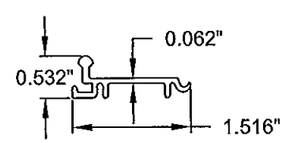

12 FRAME SILL SCREEN ADD-ON
(6063-T6 AL)

REQUIRES MIN. #10 SMS
OR 3/16" MASONRY
ANCHORS @ 24" MAX. O.C.

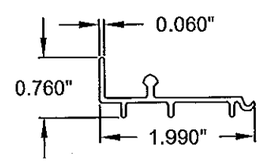

13 FRAME SILL SCREEN END ADD-ON
(6063-T6 AL)

REQUIRES MIN. #10 SMS
OR 3/16" MASONRY
ANCHORS @ 24" MAX. O.C.

SEE SHEET 17 FOR SILL RISERS.

PRODUCT REVISED
as complying with the Florida
Building Code
Acceptance No. 14-0123.11
Expiration Date 4/7/20
By [illegible]
Miami Dade Product Control

ANTHONY LYNN MILLER
LICENSE
No. 58705
11/30/15
STATE OF FLORIDA
PROFESSIONAL ENGINEER
A. LYNN MILLER, P.E.
P.E.# 58705

Revsd By:	Date:	Revisions:	
Revsd By:	Date:	Revisions:	
Revsd By:	Date:	Revisions:	
Drawn By: JR	Date: 02/20/14	Checked By:	Date:

1070 TECHNOLOGY DRIVE
N. VENICE, FL 34275
(941)-480-1600
CERT. OF AUTH. #29296

Description: EXTRUSIONS

Title: SERIES 670 ALUM. SGD - NON-IMPACT

Series/Model:	Scale:	Sheet:	Drawing No.	Rev:
SGD-670	NTS	21 of 22	PGT0128	

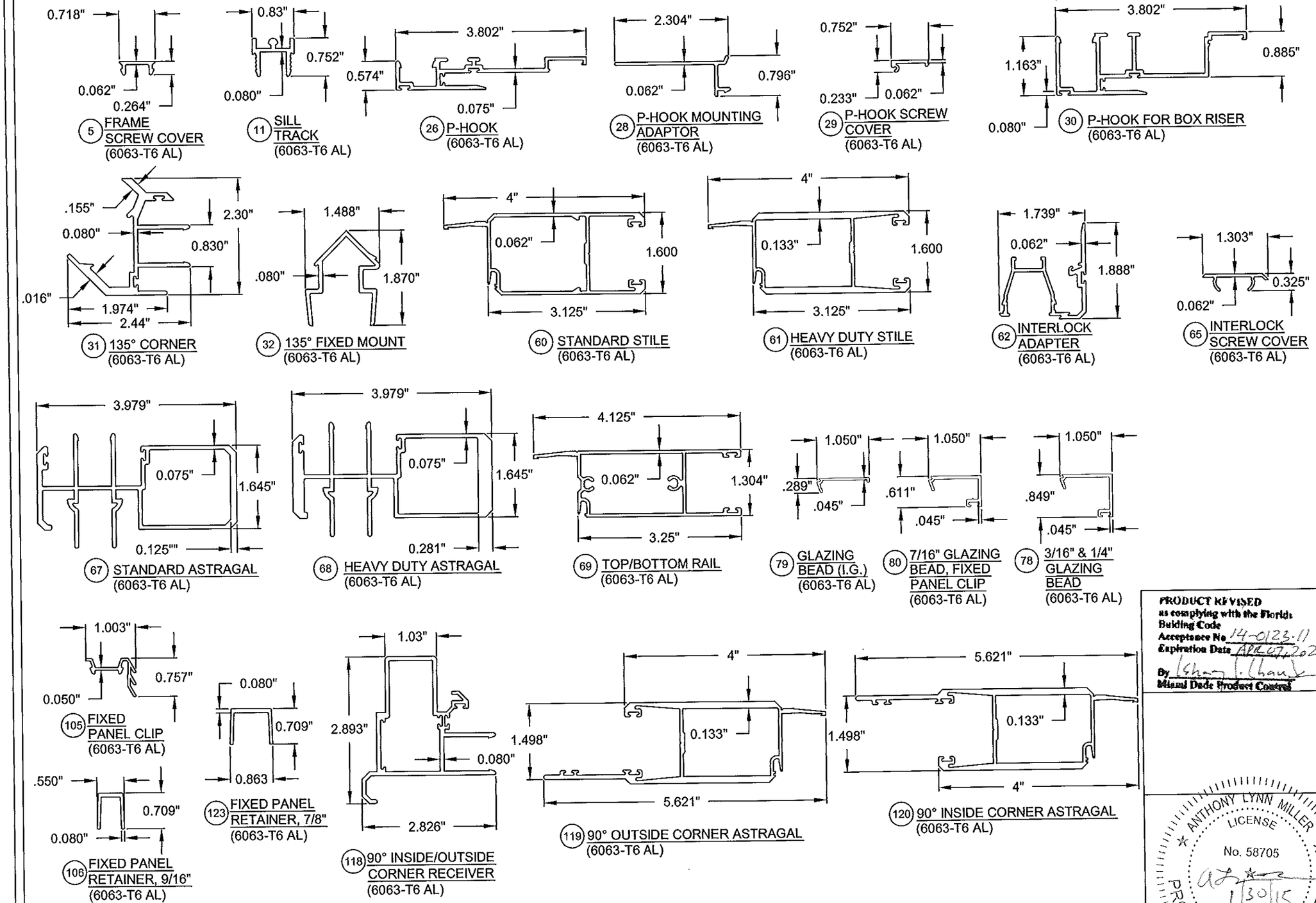

PRODUCT REVISED
as complying with the Florida Building Code
Acceptance No. 14-0123.11
Expiration Date APR 07, 2020
By Miami Dade Product Control

ANTHONY LYNN MILLER
LICENSE
No. 58705
1/30/15
STATE OF FLORIDA
PROFESSIONAL ENGINEER

A. LYNN MILLER, P.E.
P.E.# 58705

Revsd By:	Date:	Revisions:	
Revsd By:	Date:	Revisions:	
Revsd By:	Date:	Revisions:	
Drawn By: JR	Date: 02/20/14	Checked By:	Date:

1070 TECHNOLOGY DRIVE
N. VENICE, FL 34275
(941)-480-1600
CERT. OF AUTH. #29296

PGT®

Description: EXTRUSIONS

Title: SERIES 670 ALUM. SGD - NON-IMPACT

Series/Model:	Scale:	Sheet:	Drawing No.	Rev:
SGD-670	NTS	22 of 22	PGT0128	