MIAMI-DADE COUNTY
DEPARTMENT OF REGULATORY AND ECONOMIC RESOURCES (RER)
BOARD AND CODE ADMINISTRATION DIVISION

MIAMI-DADE COUNTY, FLORIDA
PRODUCT CONTROL SECTION
11805 SW 26 Street, Room 208
T (786) 315-2590 F (786) 315-2599
www.miamidade.gov/economy

# NOTICE OF ACCEPTANCE (NOA)

**PGT Industries, Inc.**
**1070 Technology Drive,**
**Nokomis, Fl. 34275**

**SCOPE:**

This NOA is being issued under the applicable rules and regulations governing the use of construction materials. The documentation submitted has been reviewed and accepted by Miami-Dade County RER-Product Control Section to be used in Miami-Dade County and other areas where allowed by the Authority Having Jurisdiction (AHJ).

This NOA shall not be valid after the expiration date stated below. The Miami-Dade County Product Control Section (In Miami-Dade County) and/ or the AHJ (in areas other than Miami-Dade County) reserve the right to have this product or material tested for quality assurance purposes. If this product or material fails to perform in the accepted manner, the manufacturer will incur the expense of such testing and the AHJ may immediately revoke, modify, or suspend the use of such product or material within their jurisdiction. RER reserves the right to revoke this acceptance, if it is determined by Miami-Dade County Product Control Section that this product or material fails to meet the requirements of the applicable building code.

This product is approved as described herein, and has been designed to comply with the Florida Building Code, including the High Velocity Hurricane Zone.

**DESCRIPTION: Series "SGD-770" Aluminum Sliding Glass Doors w / 90$^0$ & 135$^0$ corners – L.M.I.**

**APPROVAL DOCUMENT:** Drawing No. **PGT0130** (former **PGT0002 Rev C**), titled "Series 770 Alum. SGD – LM Impact", sheets 01 through 22 of 22, prepared by manufacturer, dated 08/05/07 with the latest revised on 01/30/15, signed and sealed by Lynn Miller, P. E., bearing the Miami-Dade County Product Control Section Renewal stamp with the Notice of Acceptance number and Expiration date by the Miami-Dade County Product Control Section.

**MISSILE IMPACT RATING: Large and Small Missile Impact Resistant**

**LABELING:** Each unit shall bear a permanent label with the manufacturer's name or logo, city, state, series, and following statement: "Miami-Dade County Product Control Approved", unless otherwise noted herein.

**REVISION** of this NOA shall be considered after a renewal application has been filed and there has been no change in the applicable building code negatively affecting the performance of this product.

**TERMINATION** of this NOA will occur after the expiration date or if there has been a revision or change in the materials, use, and/ or manufacture of the product or process. Misuse of this NOA as an endorsement of any product, for sales, advertising or any other purposes shall automatically terminate this NOA. Failure to comply with any section of this NOA shall be cause for termination and removal of NOA.

**ADVERTISEMENT:** The NOA number preceded by the words Miami-Dade County, Florida, and followed by the expiration date may be displayed in advertising literature. If any portion of the NOA is displayed, then it shall be done in its entirety.

**INSPECTION:** A copy of this entire NOA shall be provided to the user by the manufacturer or its distributors and shall be available for inspection at the job site at the request of the Building Official.

This NOA **revises and renews NOA No. 14-0123.10** and consists of these pages 1 and 2, and evidence pages E-1, E-2 and E-3, as well as approval document mentioned above.

The submitted documentation was reviewed by **Jaime D. Gascon, P. E.**

MIAMI-DADE COUNTY APPROVED

J. Gascon
2/5/15

## NOTICE OF ACCEPTANCE: EVIDENCE SUBMITTED

### A. DRAWINGS

1. Manufacturer's die drawings and sections.
   ***(Submitted under previous NOA No. 14–0123.10)***
2. Drawing No. **PGT0130**, titled "Series 770 Alum. SGD – LM Impact", sheets 01 through 22 of 22, prepared by manufacturer, dated 08/05/07 with the latest revised on 01/30/15, signed and sealed by Lynn Miller, P. E.

### B. TESTS

1. Test reports on: 1) Air Infiltration Test, per FBC, TAS 202–94
   2) Uniform Static Air Pressure Test, Loading per FBC, TAS 202–94
   3) Water Resistance Test, per FBC, TAS 202–94
   4) Large Missile Impact Test per FBC, TAS 201–94
   5) Cyclic Wind Pressure Loading per FBC, TAS 203–94
   6) Forced Entry Test, per FBC 2411.3.2.1, and TAS 202–94

   along with marked–up drawings and installation diagram of aluminum Sliding Glass Doors, prepared by Fenestration Testing Laboratory, Inc., Test Report No. **FTL–7554**, dated 11/01/13, signed and sealed by Marlin D. Brinson, P. E.
   ***(Submitted under previous NOA No. 14–0123.10)***
2. Test reports on: 1) Air Infiltration Test, per FBC, TAS 202–94
   2) Uniform Static Air Pressure Test, Loading per FBC, TAS 202–94
   3) Water Resistance Test, per FBC, TAS 202–94
   4) Large Missile Impact Test per FBC, TAS 201–94
   5) Cyclic Wind Pressure Loading per FBC, TAS 203–94
   6) Forced Entry Test, per FBC 2411.3.2.1, and TAS 202–94

   along with marked–up drawings and installation diagram of aluminum Sliding Glass Doors, prepared by Fenestration Testing Laboratory, Inc., Test Reports No.'s **FTL–5980–R**, **FTL–6001–R** and **FTL–6015–R** have been revised and reissued on 12/29/09, all signed and sealed by Julio Gonzales, P. E.
   ***(Submitted under previous NOA No. 09–0826.10)***

**Jaime D. Gascon, P. E.**
**Product Control Section Supervisor**
**NOA No. 14–0128.11**
**Expiration Date: February 17, 2020**
**Approval Date: February 12, 2015**

## NOTICE OF ACCEPTANCE: EVIDENCE SUBMITTED

**B. TESTS (CONTINUED)**

3. Test reports on: 1) Air Infiltration Test, per FBC, TAS 202–94
   2) Uniform Static Air Pressure Test, Loading per FBC, TAS 202–94
   3) Water Resistance Test, per FBC, TAS 202–94
   4) Large Missile Impact Test per FBC, TAS 201–94
   5) Cyclic Wind Pressure Loading per FBC, TAS 203–94
   6) Forced Entry Test, per FBC 2411.3.2.1, and TAS 202–94

   along with marked–up drawings and installation diagram of aluminum Sliding Glass Doors, prepared by Fenestration Testing Laboratory, Inc., Test Reports No.'s **FTL–5980, FTL–5993, FTL–6036, FTL–6001, FTL–6014, FTL–6015, FTL–6017, FTL–6023, FTL–6024, FTL–6025, FTL–6028, FTL–6031, FTL–6033** and **FTL–6036,** all dated 08/10/09, signed and sealed by Julio Gonzales, P. E.
   ***(Submitted under previous NOA No. 09–0826.10)***

**C. CALCULATIONS**

1. Anchor verification calculations and structural analysis, conformance to and complying with **FBC 2010** and with **FBC 5th Edition (2014)**, prepared by manufacturer, dated 01/30/15, signed and sealed by Lynn Miller, P. E.
2. **Glazing complies with ASTM E1300–09**

**D. QUALITY ASSURANCE**

1. Miami–Dade Department of Regulatory and Economic Resources (RER).

**E. MATERIAL CERTIFICATIONS**

1. Notice of Acceptance No. **13–0129.27** issued to **E.I. DuPont DeNemours & Co., Inc.** for their **"DuPont Butacite® PVB Interlayer"** dated 04/11/13, expiring on 12/11/16.
2. Notice of Acceptance No. **11–0624.02** issued to **E.I. DuPont DeNemours & Co.**, Inc. for their **"DuPont SentryGlas® Interlayer"** dated 08/25/11, expiring on 01/14/17.

**F. STATEMENTS**

1. Statement letter of conformance to and complying with **FBC 5th Edition (2014)**, issued by manufacture, dated 12/17/14, signed and sealed by Lynn Miller, P. E.
2. Statement letter of conformance and complying with **FBC–2010**, issued by manufacture, dated 01/24/14, signed and sealed by Lynn Miller, P. E.
   ***(Submitted under previous NOA No. 14–0123.10)***
3. Statement letter of no financial interest, issued by manufacture, dated 01/24/14, signed and sealed by Lynn Miller, P. E.
   ***(Submitted under previous NOA No. 14–0123.10)***

**Jaime D. Gascon, P. E.**
**Product Control Section Supervisor**
**NOA No. 14–0128.11**
**Expiration Date: February 17, 2020**
**Approval Date: February 12, 2015**

## NOTICE OF ACCEPTANCE: EVIDENCE SUBMITTED

**F. STATEMENTS (CONTINUED)**

4. Laboratory compliance letter for Test Report No. **FTL–7554**, issued by Fenestration Testing Laboratory, Inc., dated 11/01/13, signed and sealed by Marlin D. Brinson, P.E.
   ***(Submitted under previous NOA No. 14–0123.10)***
5. Proposal issued by Product Control, dated 08/12/13, signed by Jaime D. Gascon, P. E.
   ***(Submitted under previous NOA No. 14–0123.10)***
6. Laboratory compliance letter for Test Reports No.'s **FTL–5980–R**, **FTL–6001–R** and **FTL–6015–R**, reissued by Fenestration Testing Laboratory, Inc., all dated 12/29/09, signed and sealed by Julio Gonzales, P. E.
   ***(Submitted under previous NOA No. 09–0826.10)***
7. Laboratory compliance letter for Test Reports No.'s **FTL–5980, FTL–5993, FTL–6036, FTL–6001, FTL–6014, FTL–6015, FTL–6017, FTL–6023, FTL–6024, FTL–6025, FTL–6028, FTL–6031, FTL–6033** and **FTL–6036**, issued by Fenestration Testing Laboratory, Inc., all dated 08/10/09, signed and sealed by Julio Gonzales, P. E.
   ***(Submitted under previous NOA No. 09–0826.10)***
8. Proposals No.'s **09–0177,** dated 03/17 & 31/09, **09–0177A**, dated 05/07/09, **09–0177B**, dated 06/09/09 and **09–0177C**, dated 11/18/09, all issued by Product Control, signed by Ishaq Chanda, P. E.
   ***(Submitted under previous NOA No. 09–0826.10)***

**G. OTHERS**

1. Notice of Acceptance No. **14–0123.10**, issued to PGT Industries, Inc. for their Series **"SGD–770 Aluminum Sliding Glass Doors w/ wo Reinforcements"**, approved on 02/06/14 and expiring on 02/17/15.

**Jaime D. Gascon, P. E.**
**Product Control Section Supervisor**
**NOA No. 14–0128.11**
**Expiration Date: February 17, 2020**
**Approval Date: February 12, 2015**

# SERIES 770, IMPACT RESISTANT SLIDING GLASS DOOR INCLUDING POCKETS & 90°/135° CORNERS

GENERAL NOTES

1) GLAZING TYPE OPTIONS: SEE TABLE B, THIS SHEET & GLAZING DETAILS ON SHEETS 4 & 5.
2) DESIGN PRESSURES:
A. NEGATIVE DESIGN LOADS BASED ON TESTED PRESSURE AND GLASS TABLES ASTM E1300.
B. POSITIVE DESIGN LOADS BASED ON WATER TEST PRESSURE AND GLASS TABLES ASTM E1300.
3) ANCHORAGE: THE 33-1/3% STRESS INCREASE HAS NOT BEEN USED IN THE DESIGN OF THIS PRODUCT. MATERIALS, INCLUDING BUT NOT LIMITED TO STEEL SCREWS, THAT COME INTO CONTACT WITH OTHER DISSIMILAR MATERIALS SHALL MEET THE REQUIREMENTS OF THE CURRENT FLORIDA BUILDING CODE. FOR ANCHORAGE DETAILS SEE SHEETS 6-14.
4) SHUTTERS ARE NOT REQUIRED PER FBC REQUIREMENTS, AS APPLICABLE.
5) INSTALLATION SCREWS, FRAME SPLICES, FRAME AND PANEL CORNERS TO BE SEALED WITH NARROW JOINT SEALANT.
6) REFERENCES: ELCO ULTRACON, CRETEFLEX AND AGGREGATOR NOA'S, ANSI/AF&PA NDS FOR WOOD CONSTRUCTION AND ADM, ALUMINUM DESIGN MANUAL.
7) THIS PRODUCT HAS BEEN DESIGNED & TESTED TO COMPLY WITH THE REQUIREMENTS OF THE CURRENT FLORIDA BUILDING CODE, INCLUDING THE HIGH VELOCITY HURRICANE ZONE (HVHZ).
8) DOOR SIZES MUST BE VERIFIED FOR COMPLIANCE WITH EGRESS REQUIREMENTS PER CURRENT FLORIDA BUILDING CODE, AS APPLICABLE.
TEST REPORTS: FTL-5980, FTL-5993, FTL-6001, FTL-6014, FTL-6015, FTL-6017, FTL-6022, FTL-6023, FTL-6024, FTL-6025, FTL-6028, FTL-6031, FTL-6033, FTL-6036 AND FTL-7554

TABLE A:

| Group | Anchor | Substrate | Frame Member | Min. Edge Distance | Min. Embedment |
|---|---|---|---|---|---|
| 1 | 1/4" Elco Ultracon | Concrete (min. 2.85 ksi) | Head/Sill/Jamb | 1" | 1-3/8" |
| | | Ungrouted CMU, (ASTM C-90) | Jamb only | 2-1/2" | 1-1/4" |
| | | Grouted CMU (ASTM C-90, min. 2 ksi grout) | Jamb only | 2-1/2" | 1-3/4" |
| 2 | 1/4" Elco 410 S.S. CreteFlex | Concrete (min. 3.35 ksi) | Head/Sill/Jamb | 1" | 1-3/4" |
| | | Ungrouted CMU, (ASTM C-90) | Jamb only | 2-1/2" | 1-1/4" |
| | | P.T. Southern Pine (SG=0.55) | Head/Sill/Jamb | 1" | 1.395" |
| 3 | 1/4" Elco Ultracon | Concrete (min. 2.85 ksi) | Head/Sill | 1" | 1-3/8" |
| | | Ungrouted CMU (ASTM C-90) | Jamb only | 1" | 1-1/4" |
| | #12, 18-8 or 410 S.S. SMS, (min. 11 threads/in) | P.T. Southern Pine (SG=0.55) | Head/Sill/Jamb | 9/16" | 1-3/8" |
| | | Aluminum, 6063-T5* | Head/Sill/Jamb | 3/8" | 0.063" |
| | | Steel, A36* | Head/Sill/Jamb | 3/8" | 0.050" |
| | | Steel Stud, A653 Gr. 33* | Head/Sill/Jamb | 3/8" | 0.0451" |
| | 1/4" Elco 18-8 S.S. Aggre-Gator | Concrete (min. 3.275 ksi) | Head/Sill/Jamb | 1-1/2" | 1-3/8" |
| | | Ungrouted CMU, (ASTM C-90) | Jamb only | 2" | 1-1/4" |
| | | Grouted CMU (ASTM C-90, min. 2 ksi grout) | Jamb only | 2" | 2" |
| | | P.T. Southern Pine (SG=0.55) | Head/Sill/Jamb | 1" | 1-3/8" |
| 4 | #12, Steel SMS G5, (min. 11 threads/in) | P.T. Southern Pine (SG=0.55) | Head/Sill/Jamb | 9/16" | 1-3/8" |
| | | Aluminum, 6063-T5* | Head/Sill/Jamb | 3/8" | 0.063" |
| | | Steel, A36* | Head/Sill/Jamb | 3/8" | 0.050" |
| | | Steel Stud, A653 Gr. 33* | Head/Sill/Jamb | 3/8" | 0.0451" |

* MIN. OF 3 THREADS BEYOND THE METAL SUBSTRATE. METAL SUBSTRATE TO MEET MIN. STRENGTH AND THICKNESS REQUIREMENTS PER CURRENT FLORIDA BUILDING CODE AND TO BE REVIEWED BY THE AUTHORITY HAVING JURISDICTION.
**P-HOOK INSTALLATION REQUIRES 2.693" MIN. EDGE DISTANCE, REFER TO SHEET 14 FOR ALL SPECIFIC P-HOOK REQUIREMENTS.

ANCHOR NOTES

1) FOR CONCRETE/CMU SUBSTRATE APPLICATIONS IN MIAMI-DADE COUNTY, USE ONLY MIAMI-DADE COUNTY APPROVED ELCO ANCHORS. SEE TABLE A ON THIS SHEET FOR EMBEDMENT, EDGE DISTANCE AND SUBSTRATE REQUIREMENTS.
2) FOR OTHER SUBSTRATE APPLICATIONS SEE TABLE ON THIS SHEET.
3) WOOD BUCKS DEPICTED AS 1X ARE LESS THAN 1-1/2" THICK. PROPERLY SECURED, 1X WOOD BUCKS ARE OPTIONAL IF UNIT IS INSTALLED DIRECTLY TO SOLID CONCRETE. WOOD BUCKS DEPICTED AS 2X ARE 1-1/2" THICK OR GREATER. 1X AND 2X BUCKS (WHEN USED) SHALL BE DESIGNED TO PROPERLY TRANSFER LOADS TO THE STRUCTURE. BUCK DESIGN AND INSTALLATION IS THE RESPONSIBILITY OF THE ENGINEER OR ARCHITECT OF RECORD & TO BE REVIEWED BY THE BUILDING OFFICIAL.
4) METAL SUBSTRATE TO MEET MIN. STRENGTH AND THICKNESS REQUIREMENTS PER CURRENT FLORIDA BUILDING CODE AND TO BE REVIEWED BY THE AUTHORITY HAVING JURISDICTION.
5) IF SILL IS TIGHT TO SUBSTRATE, GROUT OR OTHER MATERIAL IS NOT REQUIRED. IF USED, NON-SHRINK, NON-METALLIC GROUT, MAX. 1/4" THICK & 3400 PSI MIN., (DONE BY OTHERS) MUST FULLY SUPPORT THE ENTIRE LENGTH OF THE SILL THAT IS NOT TIGHT TO THE SUBSTRATE, AND TRANSFER SHEAR LOAD TO SUBSTRATE. IF SUBSTRATE IS WOOD, 30# FELT PAPER OR MASTIC IS REQUIRED BETWEEN THE GROUT AND WOOD SUBSTRATE, OR AS APPROVED BY THE AUTHORITY HAVING JURISDICTION.

NOA DRAWING MAP


| | SHEET |
|---|---|
| GENERAL NOTES | 1 |
| EXAMPLE CONFIGS | 2-3 |
| GLAZING DETAILS | 4,5 |
| ANCHORAGE | 6-14 |
| DESIGN PRESSURES | 6-8 |
| INSTALL DETAILS | 12-14 |
| ELEVATIONS | 15,16 |
| PANEL / SILL TYPES | 17 |
| CROSS SECTIONS | 18,19 |
| PARTS LIST | 20 |
| EXTRUSIONS | 21,22 |


TABLE B, SEE DETAILS ON SHEETS 4 & 5

| Glass Type | Description (Listed from Exterior to Interior) |
|---|---|
| G3 | 7/16" Laminated: (2) Lites of 3/16" HS Glass with .090" PVB Interlayer |
| G3A | 9/16" Laminated: (2) Lites of 1/4" HS Glass with .090" PVB Interlayer |
| G4 | 7/16" Laminated: (2) Lites of 3/16" HS Glass with .090" SG Interlayer |
| G4A | 9/16" Laminated: (2) Lites of 1/4" HS Glass with .090" SG Interlayer |
| G5 | 1" Laminated I.G.: 3/16" T Exterior Cap + 3/8" Air Space + 7/16" Laminated; (2) Lites of 3/16" HS Glass with .090" PVB Interlayer |
| G5A | 1" Laminated I.G.: 1/4" T Exterior Cap + 5/16" Air Space + 7/16" Laminated; (2) Lites of 3/16" HS Glass with .090" PVB Interlayer |
| G6 | 1" Laminated I.G.: 3/16" T Exterior Cap + 3/8" Air Space + 7/16" Laminated; (2) Lites of 3/16" HS Glass with .090" SG Interlayer |
| G6A | 1" Laminated I.G.: 1/4" T Exterior Cap + 5/16" Air Space + 7/16" Laminated; (2) Lites of 3/16" HS Glass with .090" SG Interlayer |
| G7 | 7/16" Laminated: (2) Lites of 3/16" ANN Glass with .090" SG Interlayer |
| G7A | 9/16" Laminated: (2) Lites of 1/4" ANN Glass with .090" SG Interlayer |
| G8 | 1" Laminated I.G.: 3/16" T Exterior Cap + 3/8" Air Space + 7/16" Laminated; (2) Lites of 3/16" ANN Glass with .090" SG Interlayer |
| G8A | 1" Laminated I.G.: 1/4" T Exterior Cap + 5/16" Air Space + 7/16" Laminated; (2) Lites of 3/16" ANN Glass with .090" SG Interlayer |

| DESIGN PRESSURE RATING | IMPACT RATING |
|---|---|
| SEE TABLES 1, 2 & 3 ON SHEETS 6, 7 & 8 | RATED FOR LARGE & SMALL MISSILE IMPACT RESISTANCE |

GLAZING NOTES:
"ANN" = ANNEALED
"HS" = HEAT STRENGTHENED
"T" = TEMPERED
"PVB" = DUPONT .090" BUTACITE PVB
"SG" = DUPONT .090" SENTRYGLAS

PRODUCT RENEWED
as complying with the Florida Building Code
Acceptance No 14-0128.11
Expiration Date 02/17/2020
By
Miami-Dade County

ANTHONY LYNN MILLER
LICENSE
No. 58705
STATE OF FLORIDA
PROFESSIONAL ENGINEER
1/30/15
A. LYNN MILLER, P.E.
P.E.# 58705

| Revsd By: | Date: | Revisions: | |
|---|---|---|---|
| Revsd By: | Date: | Revisions: | |
| Revsd By: | Date: | Revisions: | |
| Drawn By: JR | Date: 10/10/14 | Checked By: | Date: |

1070 TECHNOLOGY DRIVE
N. VENICE, FL 34275
(941)-480-1600
CERT. OF AUTH. #29296

PGT®

Description: GENERAL NOTES AND MAP
Title: SERIES 770 ALUM. SGD - LM IMPACT

| Series/Model: | Scale: | Sheet: | Drawing No. | Rev: |
|---|---|---|---|---|
| SGD-770 | NTS | 1 of 22 | PGT0130 | |

# EXAMPLE CONFIGURATIONS

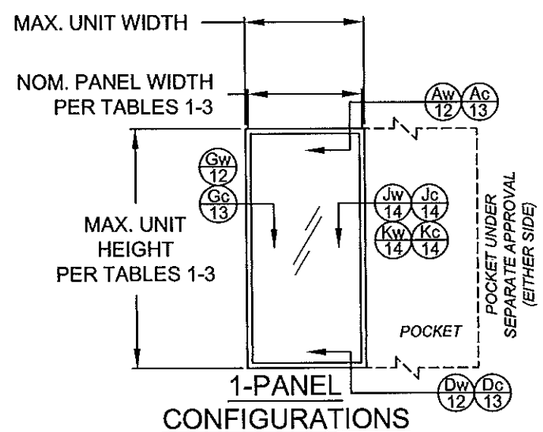


1-PANEL CONFIGURATIONS

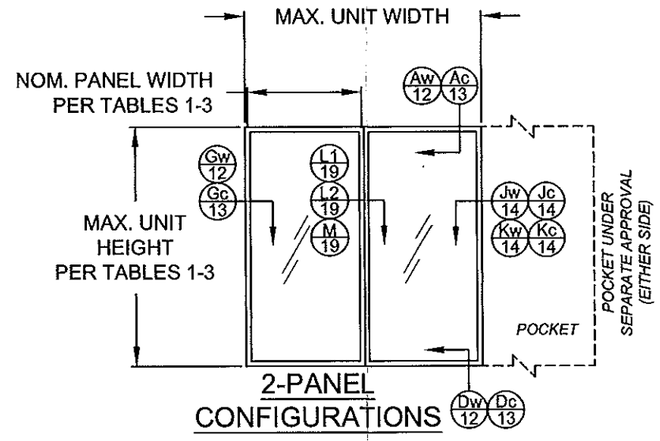


2-PANEL CONFIGURATIONS

CONFIGURATIONS NOTES:

1) ALL CONFIGURATIONS SHOWN ARE ALSO AVAILABLE AS POCKET CONFIGURATIONS AT EITHER OR BOTH JAMB LOCATIONS USING DETAIL "Jw", "Jc", "Kw" OR "Kc" INSTALLATION. EXAMPLE: 4-PANEL XXXX IN POCKET (p) CONFIGURATION CAN BE pXXXXp, pXXXX OR XXXXp. OXXX IN POCKET CONFIGURATION CAN BE OXXXp.

2) 90° & 135° CORNER CONFIGURATIONS CAN BE A COMBINATION OF ANY 2 STRAIGHT CONFIGURATIONS.

3) FOR NOM. PANEL WIDTH, SEE TABLES 1-3.

"X" = OPERABLE PANEL,
"O" = INOPERABLE PANEL,
"p" = POCKET

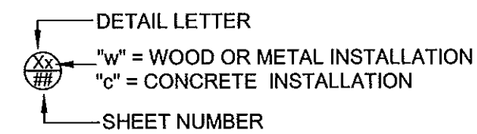


DLO WIDTH = NOM. PANEL WIDTH - 7"
DLO HEIGHT = DOOR UNIT HEIGHT - 10.125"
PANEL HEIGHT = DOOR UNIT HEIGHT - 1.866"

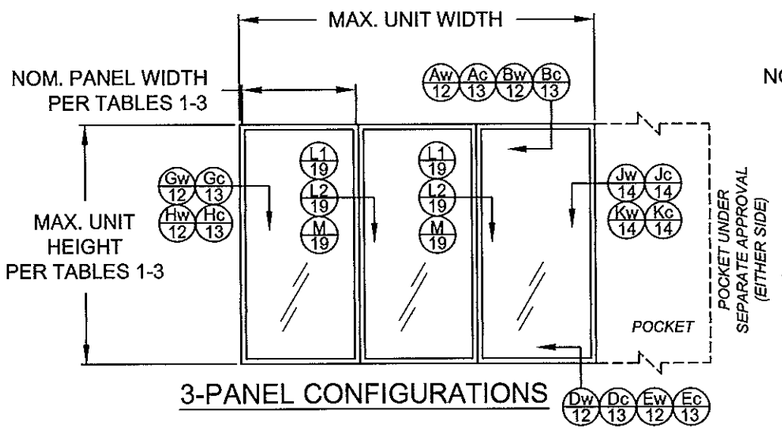


3-PANEL CONFIGURATIONS

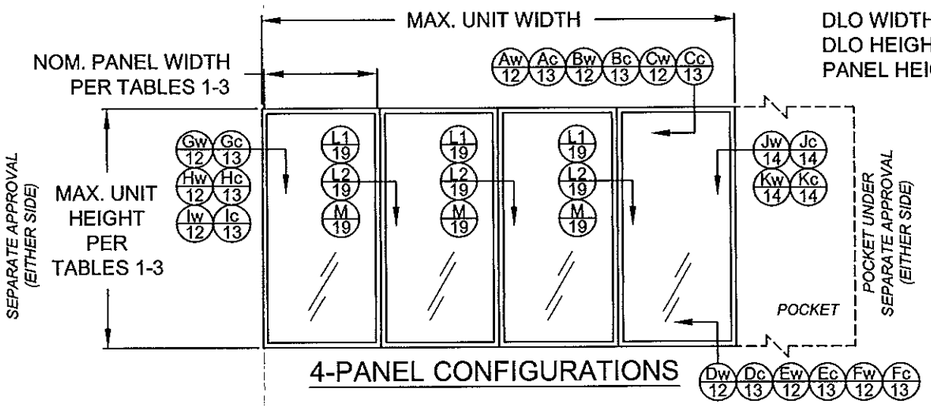


4-PANEL CONFIGURATIONS

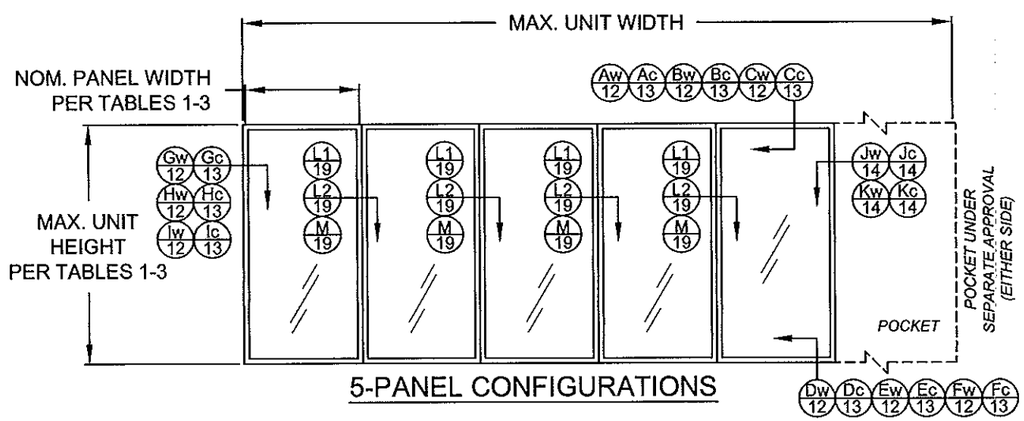


5-PANEL CONFIGURATIONS

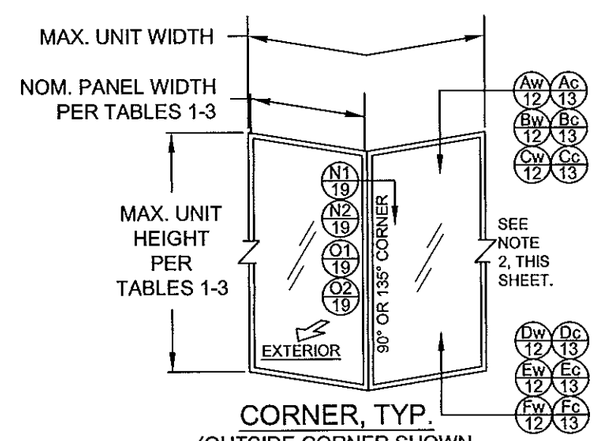


CORNER, TYP.
(OUTSIDE CORNER SHOWN, INSIDE CORNER SIMILAR)

PRODUCT RENEWED
as complying with the Florida Building Code
Acceptance No 14-0128.11
Expiration Date 02/17/2020
By
Miami Dade Permit Tracking

ANTHONY LYNN MILLER
LICENSE
No. 58705
STATE OF FLORIDA
PROFESSIONAL ENGINEER
A. LYNN MILLER, P.E.
P.E.# 58705

| Revsd By: | Date: | Revisions: | |
|---|---|---|---|
| Revsd By: | Date: | Revisions: | |
| Revsd By: | Date: | Revisions: | |
| Drawn By: JR | Date: 10/10/14 | Checked By: | Date: |

1070 TECHNOLOGY DRIVE
N. VENICE, FL 34275
(941)-480-1600
CERT. OF AUTH. #29296

PGT®

Description: EXAMPLE CONFIGURATIONS
Title: SERIES 770 ALUM. SGD - LM IMPACT

| Series/Model: | Scale: | Sheet: | Drawing No. | Rev: |
|---|---|---|---|---|
| SGD-770 | NTS | 2 of 22 | PGT0130 | |

# EXAMPLE CONFIGURATIONS

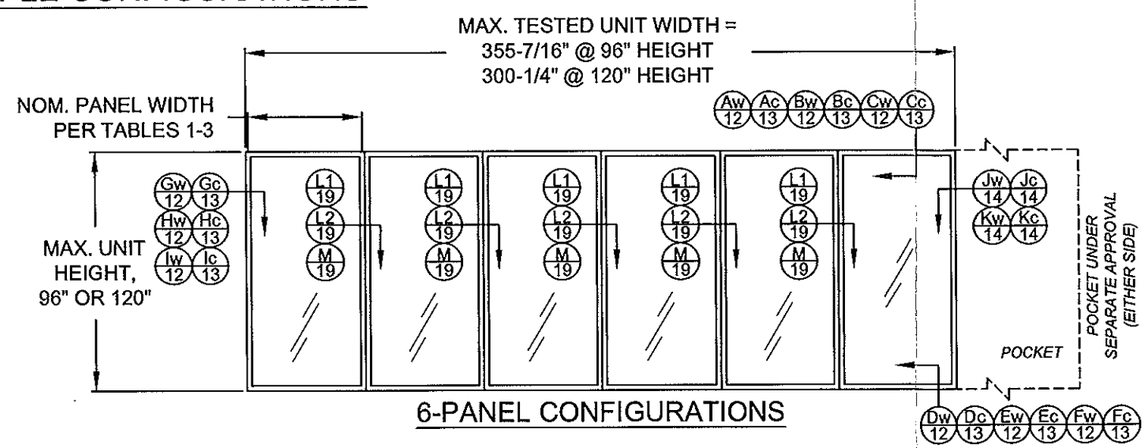


## 6-PANEL CONFIGURATIONS

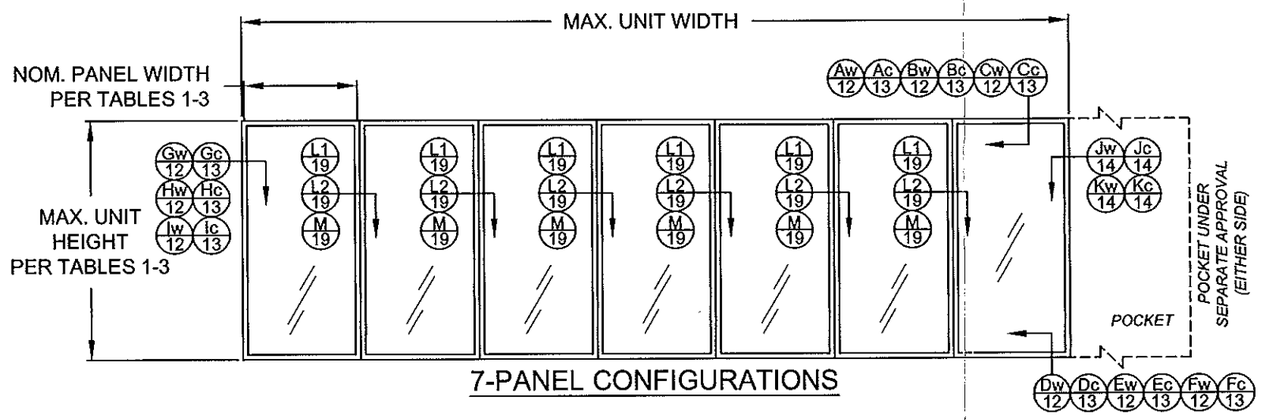


## 7-PANEL CONFIGURATIONS

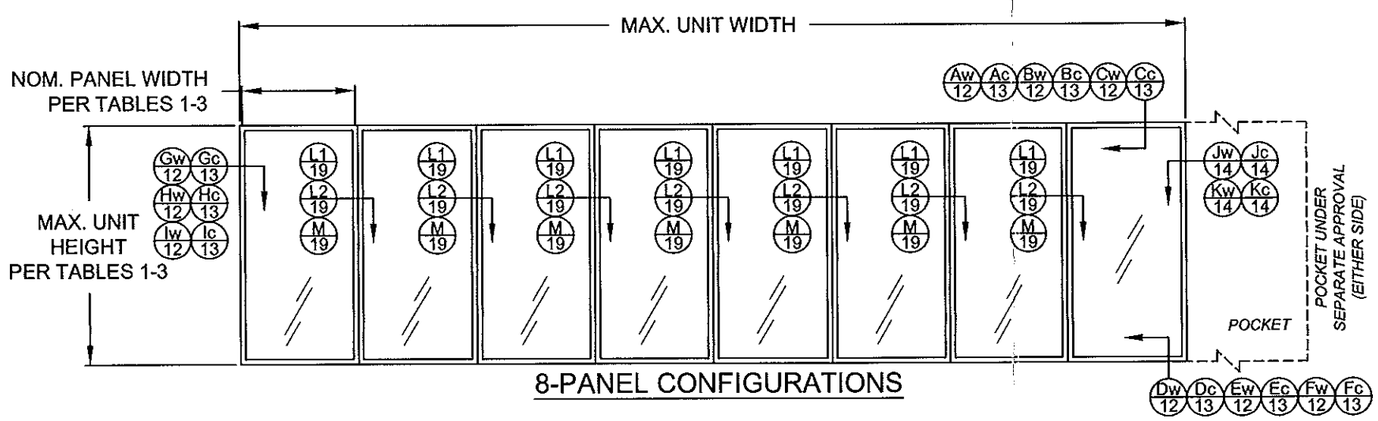


## 8-PANEL CONFIGURATIONS

CONFIGURATIONS NOTES:

1) ALL CONFIGURATIONS SHOWN ARE ALSO AVAILABLE AS POCKET CONFIGURATIONS AT EITHER OR BOTH JAMB LOCATIONS USING DETAIL "Jw", "Jc", "Kw" OR "Kc" INSTALLATION. EXAMPLE: 4-PANEL XXXX IN POCKET (p) CONFIGURATION CAN BE pXXXXp, pXXXX OR XXXXp. OXXX IN POCKET CONFIGURATION CAN BE OXXXp.

2) 90° & 135° CORNER CONFIGURATIONS CAN BE A COMBINATION OF ANY 2 STRAIGHT CONFIGURATIONS.

3) FOR NOM. PANEL WIDTH, SEE TABLES 1-3.

"X" = OPERABLE PANEL,
"O" = INOPERABLE PANEL,
"p" = POCKET

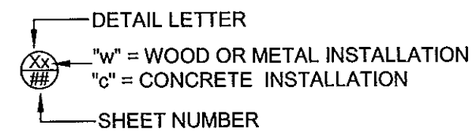


DLO WIDTH = NOM. PANEL WIDTH - 7"
DLO HEIGHT = DOOR UNIT HEIGHT - 10.125"
PANEL HEIGHT = DOOR UNIT HEIGHT - 1.866"

PRODUCT RENEWED
as complying with the Florida
Building Code
Acceptance No 14-0128.11
Expiration Date 02/17/2020
By
Miami Dade Product Control

ANTHONY LYNN MILLER
LICENSE
No. 58705
1/30/15
STATE OF
FLORIDA
PROFESSIONAL ENGINEER
A. LYNN MILLER, P.E.
P.E.# 58705

| Revsd By: | Date: | Revisions: | |
|---|---|---|---|
| Revsd By: | Date: | Revisions: | |
| Revsd By: | Date: | Revisions: | |
| Drawn By: JR | Date: 10/10/14 | Checked By: | Date: |

1070 TECHNOLOGY DRIVE
N. VENICE, FL 34275
(941)-480-1600
CERT. OF AUTH. #29296

PGT®

Description: EXAMPLE CONFIGURATIONS
Title: SERIES 770 ALUM. SGD - LM IMPACT

| Series/Model: | Scale: | Sheet: | Drawing No. | Rev: |
|---|---|---|---|---|
| SGD-770 | NTS | 3 of 22 | PGT0130 | |

# GLAZING DETAILS (G3, G3A, G4, G4A, G5 & G5A

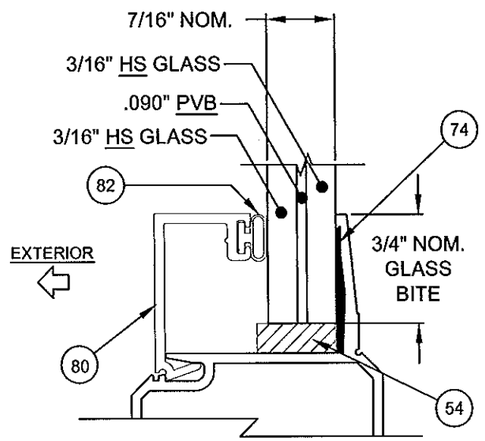


7/16" LAMINATED GLASS, TYPE G3

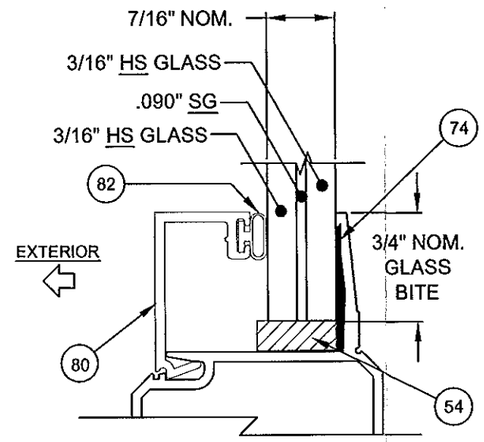


7/16" LAMINATED GLASS, TYPE G4

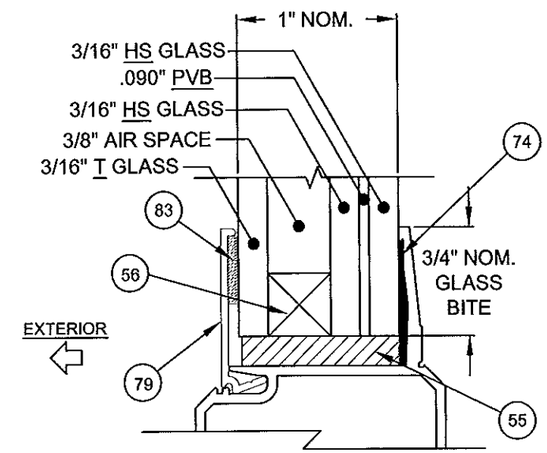


1" LAMINATED I.G. GLASS, TYPE G5

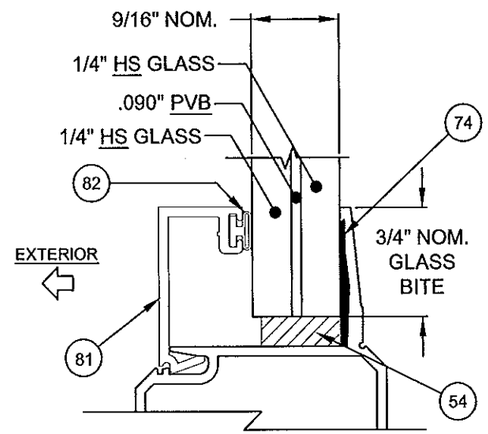


9/16" LAMINATED GLASS, TYPE G3A

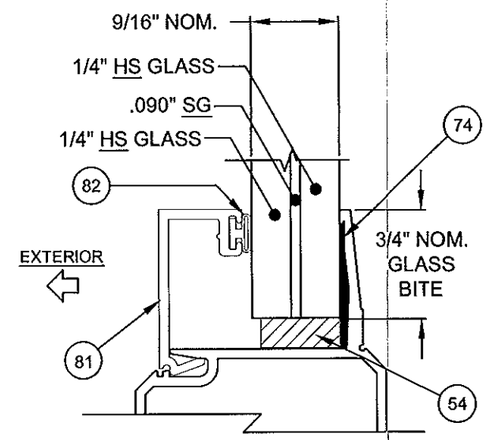


9/16" LAMINATED GLASS, TYPE G4A

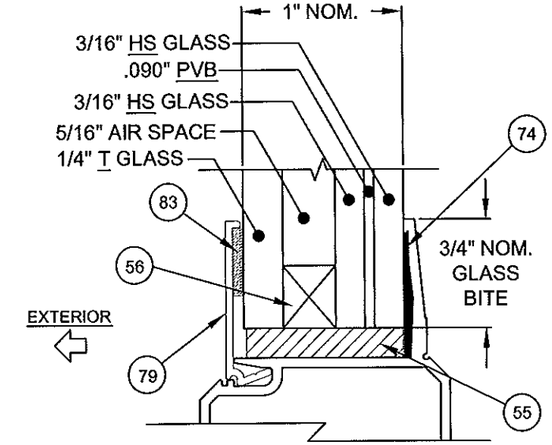


1" LAMINATED I.G. GLASS, TYPE G5A

GLAZING NOTES:
"ANN" = ANNEALED
"HS" = HEAT STRENGTHENED
"T" = TEMPERED
"PVB" = DUPONT .090" BUTACITE PVB
"SG" = DUPONT .090" SENTRYGLAS

PRODUCT RENEWED
as complying with the Florida
Building Code
Acceptance No 14-0128.11
Expiration Date 02/17/2020
By
Miami Dade Product Control

ANTHONY LYNN MILLER
LICENSE
No. 58705
STATE OF FLORIDA
PROFESSIONAL ENGINEER
A. LYNN MILLER, P.E.
P.E.# 58705

| Revsd By: | Date: | Revisions: | |
|---|---|---|---|
| Revsd By: | Date: | Revisions: | |
| Revsd By: | Date: | Revisions: | |
| Drawn By: JR | Date: 10/10/14 | Checked By: | Date: |

1070 TECHNOLOGY DRIVE
N. VENICE, FL 34275
(941)-480-1600
CERT. OF AUTH. #29296

PGT®

Description: GLAZING DETAILS
Title: SERIES 770 ALUM. SGD - LM IMPACT

| Series/Model: | Scale: | Sheet: | Drawing No. | Rev: |
|---|---|---|---|---|
| SGD-770 | NTS | 4 of 22 | PGT0130 | |

# GLAZING DETAILS (G6, G6A, G7, G7A, G8 & G8A

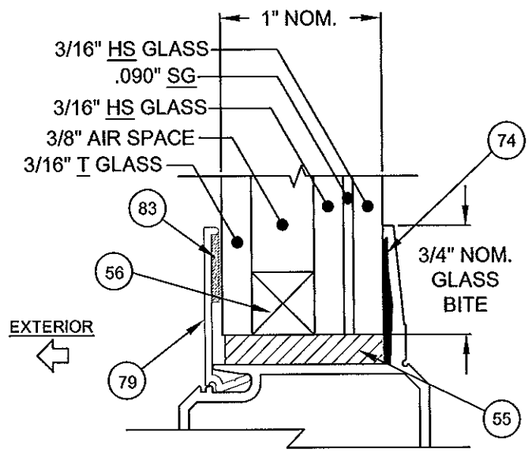


1" LAMINATED I.G. GLASS, TYPE G6

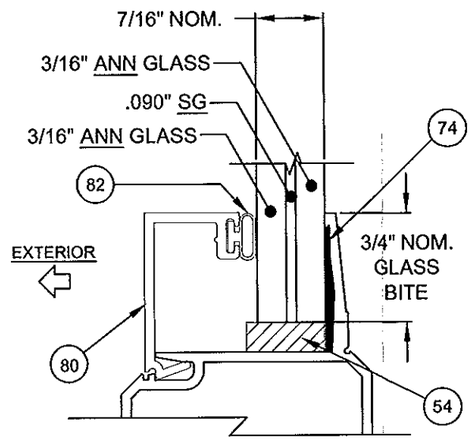


7/16" LAMINATED GLASS, TYPE G7

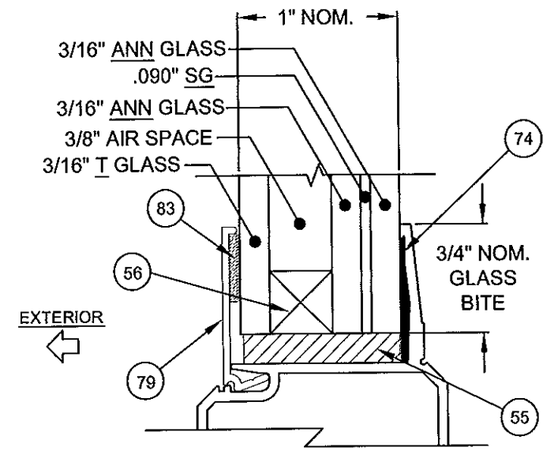


1" LAMINATED I.G. GLASS, TYPE G8

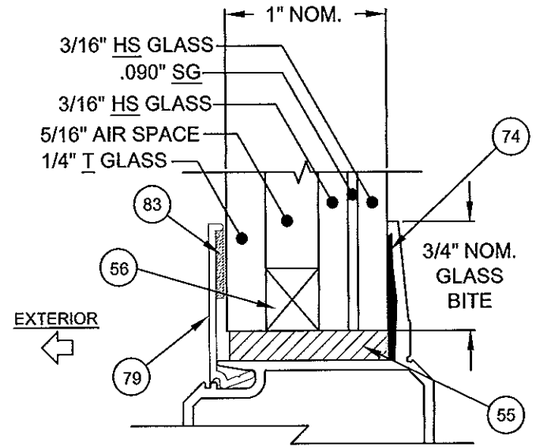


1" LAMINATED I.G. GLASS, TYPE G6A

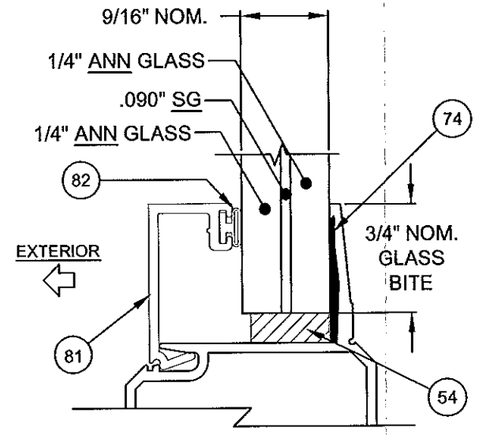


9/16" LAMINATED GLASS, TYPE G7A

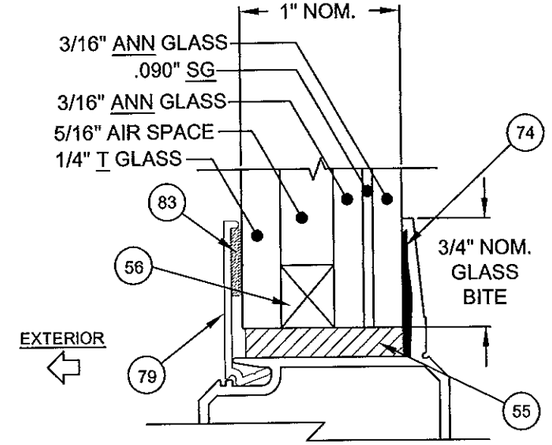


1" LAMINATED I.G. GLASS, TYPE G8A

GLAZING NOTES:
"ANN" = ANNEALED
"HS" = HEAT STRENGTHENED
"T" = TEMPERED
"PVB" = DUPONT .090" BUTACITE PVB
"SG" = DUPONT .090" SENTRYGLAS

PRODUCT RENEWED
as complying with the Florida
Building Code
Acceptance No 14-0128.11
Expiration Date 02/17/2020
By
Miami Dade Product Control

ANTHONY LYNN MILLER
LICENSE
No. 58705
1/30/15
STATE OF FLORIDA
PROFESSIONAL ENGINEER
A. LYNN MILLER, P.E.
P.E.# 58705

| Revsd By: | Date: | Revisions: | |
|---|---|---|---|
| Revsd By: | Date: | Revisions: | |
| Revsd By: | Date: | Revisions: | |
| Drawn By: JR | Date: 10/10/14 | Checked By: | Date: |

1070 TECHNOLOGY DRIVE
N. VENICE, FL 34275
(941)-480-1600
CERT. OF AUTH. #29296

PGT®

Description: GLAZING DETAILS
Title: SERIES 770 ALUM. SGD - LM IMPACT

| Series/Model: | Scale: | Sheet: | Drawing No. | Rev: |
|---|---|---|---|---|
| SGD-770 | NTS | 5 of 22 | PGT0130 | |

TABLE 1:

**Design Pressure (DP) and Anchor Quantities Required, (for all approved configurations on Sheets 2 & 3)**

For corner astragal anchorage on 90° or 135° corner units, see sheet 11

**Maximum DP for all sizes: +60 / -60**
(May be limited by Table 1A)

| Table applies to Glass Types 3, 3A, 5, 5A, 7, 7A, 8 & 8A and the Stile / Astragal types shown below. | | | | Door Unit Height | | | | | | | | | | | | | | | |
|---|---|---|---|---|---|---|---|---|---|---|---|---|---|---|---|---|---|---|---|
| | | | | 80" | | | | 84" | | | | 90" | | | | 96" | | | |
| | | | | 69-7/8" DLO | | | | 73-7/8" DLO | | | | 79-7/8" DLO | | | | 85-7/8" DLO | | | |
| | | | | Anchor Group | | | | Anchor Group | | | | Anchor Group | | | | Anchor Group | | | |
| | | | | 1 | 2 | 3 | 4 | 1 | 2 | 3 | 4 | 1 | 2 | 3 | 4 | 1 | 2 | 3 | 4 |
| Nominal Panel Width | 24" | 17" DLO | Head/Sill | C4+1 | C4+1 | C4+1 | C4+1 | C4+1 | C4+1 | C4+1 | C4+1 | C4+1 | C4+1 | C4+1 | C4+1 | C4+1 | C4+1 | C4+1 | C4+1 |
| | | | Jamb | 8 | 8 | 8 | 8 | 8 | 8 | 8 | 8 | 8 | 8 | 8 | 8 | 8 | 8 | 8 | 8 |
| | | | P-hook | 6+7 | 6+7 | 6+7 | 6+7 | 7+8 | 7+8 | 7+8 | 7+8 | 7+8 | 7+8 | 7+8 | 7+8 | 7+8 | 7+8 | 7+8 | 7+8 |
| | 30" | 23" DLO | Head/Sill | C4+1 | C4+1 | C4+1 | C4+1 | C4+1 | C4+1 | C4+1 | C4+1 | C4+1 | C4+1 | C4+1 | C4+1 | C4+1 | C4+1 | C4+1 | C4+1 |
| | | | Jamb | 8 | 8 | 8 | 8 | 8 | 8 | 8 | 8 | 8 | 8 | 8 | 8 | 8 | 8 | 8 | 8 |
| | | | P-hook | 6+7 | 6+7 | 6+7 | 6+7 | 7+8 | 7+8 | 7+8 | 7+8 | 7+8 | 7+8 | 7+8 | 7+8 | 7+8 | 7+8 | 7+8 | 7+8 |
| | 36" | 29" DLO | Head/Sill | C4+1 | C4+1 | C4+1 | C4+1 | C4+1 | C4+1 | C4+1 | C4+1 | C4+1 | C4+1 | C4+1 | C4+1 | C4+1 | C4+1 | C4+1 | C4+1 |
| | | | Jamb | 8 | 8 | 8 | 8 | 8 | 8 | 8 | 8 | 8 | 8 | 8 | 8 | 8 | 8 | 8 | 8 |
| | | | P-hook | 6+7 | 6+7 | 6+7 | 6+7 | 7+8 | 7+8 | 7+8 | 7+8 | 7+8 | 7+8 | 7+8 | 7+8 | 7+8 | 7+8 | 7+8 | 7+8 |
| | 42" | 35" DLO | Head/Sill | C4+1 | C4+1 | C4+1 | C4+1 | C4+1 | C4+1 | C4+1 | C4+1 | C4+1 | C4+1 | C4+1 | C4+1 | C4+1 | C4+1 | C4+1 | C4+1 |
| | | | Jamb | 8 | 8 | 8 | 8 | 8 | 8 | 8 | 8 | 8 | 8 | 8 | 8 | 8 | 8 | 8 | 8 |
| | | | P-hook | 6+7 | 6+7 | 6+7 | 6+7 | 7+8 | 7+8 | 7+8 | 7+8 | 7+8 | 7+8 | 7+8 | 7+8 | 7+8 | 7+8 | 7+8 | 7+8 |
| | 48" | 41" DLO | Head/Sill | C4+2 | C4+2 | C4+2 | C4+2 | C4+2 | C4+2 | C4+2 | C4+2 | C4+2 | C4+2 | C4+2 | C4+2 | C4+2 | C4+2 | C4+2 | C4+2 |
| | | | Jamb | 8 | 8 | 8 | 8 | 8 | 8 | 8 | 8 | 8 | 8 | 8 | 8 | 8 | 8 | 8 | 8 |
| | | | P-hook | 6+7 | 6+7 | 6+7 | 6+7 | 7+8 | 7+8 | 7+8 | 7+8 | 7+8 | 7+8 | 7+8 | 7+8 | 7+8 | 7+8 | 7+8 | 7+8 |

FOR EXAMPLE ON USING TABLE, SEE SHEET 7.

TABLE 1A:

| Sill Height to Max. (+) DP (Water Infiltration Rating) | |
|---|---|
| Sill Riser Height (Flat or Box, see Sheet 17) | (+) Design Pressure, psf |
| Flush - 1-1/2" | see note 3 |
| Low - 2-1/2" | + 46.67 |
| Medium - 3-1/4" | + 60.0 |
| High - 4" | + 60.0 |

SEE NOTES 1-3

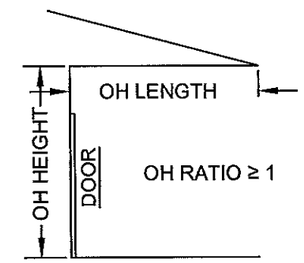


$$\text{OH RATIO} = \frac{\text{OH LENGTH}}{\text{OH HEIGHT}}$$

NOTES:

1) POSITIVE PRESSURES IN TABLE 1 ARE BASED ON THE USE OF THE 3-1/4" SILL.
2) WHEN USING THE 2-1/2" SILL, POSITIVE WATER DP IS 46.67 PSF MAX. WHEN USING THE 3-1/4" SILL, POSITIVE WATER DP IS 60.0 PSF MAX. WHEN USING THE 4" SILL, POSITIVE WATER DP IS 60.0 PSF MAX (NEGATIVE PRESSURES UNCHANGED). SEE TABLE 1A.
3) 4", 3-1/4" AND 2-1/2" SILL HEIGHTS ARE TESTED FOR WATER INFILTRATION WHEREAS THE 1-1/2" SILL IS NOT AND MUST ONLY BE USED WHERE WATER RESISTANCE IS NOT REQUIRED. MAX. POSITIVE DESIGN PRESSURES SHOWN IN TABLE 1 MAY BE USED WHEN THE DOOR IS PROTECTED BY AN OVERHANG COMPLYING WITH THE CURRENT FLORIDA BUILDING CODE (SEE ADJACENT DIAGRAM); THIS CONDITION IS NOT RATED FOR WATER INFILTRATION.
4) SEE SHEETS 10-14 FOR ANCHORAGE SPACING, EDGE DISTANCE AND EMBEDMENT INFORMATION.
5) DOOR SIZE TO COMPLY WITH CURRENT FBC EGRESS REQUIREMENTS WHEN REQUIRED.
6) JAMB ANCHORS ARE SPECIFIED AS THE TOTAL QUANTITY, DIVIDE BY 2 FOR PAIRS TO BE INSTALLED.

DLO WIDTH =
NOM. PANEL WIDTH - 7"

DLO HEIGHT =
DOOR UNIT HEIGHT - 10.125"

PANEL HEIGHT =
DOOR UNIT HEIGHT - 1.866"

| Interlock | P-hook | Lockstile @ Jamb | Straight Astragal Assembly | Lockstile @ Straight Astragal | 90° Astragal Assembly | Lockstile @ 90° Astragal | 135° Astragal Assembly | Lockstile @ 135° Astragal |
|---|---|---|---|---|---|---|---|---|
| Standard Stiles | Standard Stile | Standard Stile | Standard Stile | Standard Stile | Heavy-duty Stile | Heavy-duty Stile | Heavy-duty Stile | Heavy-duty Stile |
| 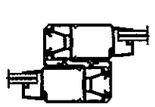 | 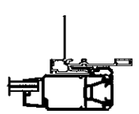 | 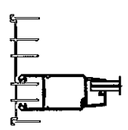 | Standard Astragal 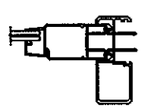 | | Outside Corner 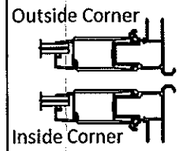 Inside Corner | Outside Corner 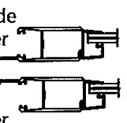 Inside Corner | Inside Corner 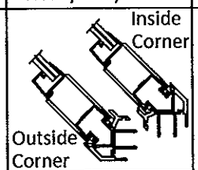 Outside Corner | |
| Part #60 (x2) | Part #60 | Part #60 | Part #60 (Stile) Part #67 (Astragal) | Part #60 | Part #61 (Stile) Part #118 (Corner Receiver) | Part #119 (Out.) Part #120 (In.) | Part #61 (Stile) Parts #31 & #32 (Corn. & Fxd Mount) | Part #61 |

PRODUCT RENEWED
as complying with the Florida
Building Code
Acceptance No 14-0128.11
Expiration Date 02/17/2020
By
Miami Dade Product Control

ANTHONY LYNN MILLER
LICENSE
No. 58705
1/30/15
STATE OF FLORIDA
PROFESSIONAL ENGINEER
A. LYNN MILLER, P.E.
P.E.# 58705

| Revsd By: | Date: | Revisions: | |
|---|---|---|---|
| Revsd By: | Date: | Revisions: | |
| Revsd By: | Date: | Revisions: | |
| Drawn By: JR | Date: 10/10/14 | Checked By: | Date: |

1070 TECHNOLOGY DRIVE
N. VENICE, FL 34275
(941)-480-1600
CERT. OF AUTH. #29296

Description: DP AND ANCHORAGE
Title: SERIES 770 ALUM. SGD - LM IMPACT

| Series/Model: | Scale: | Sheet: | Drawing No. | Rev: |
|---|---|---|---|---|
| SGD-770 | NTS | 6 of 22 | PGT0130 | |

TABLE 2:

| Design Pressure (DP) and Anchor Quantities Required, (for all approved configurations on Sheets 2 & 3)<br>For corner astragal anchorage on 90° or 135° corner units, see sheet 11 | Maximum DP for all sizes: +60 / -60<br>(May be limited by Table 2A) |
|---|---|

Table applies to Glass Types 4, 4A, 6, 6A, 7, 7A, 8 & 8A and the Stile / Astragal types shown below.

Door Unit Height: 80", 84", 90", 96"

| Nominal Panel Width | DLO | | 80" 69-7/8" DLO Anchor Group 1 | 2 | 3 | 4 | 84" 73-7/8" DLO Anchor Group 1 | 2 | 3 | 4 | 90" 79-7/8" DLO Anchor Group 1 | 2 | 3 | 4 | 96" 85-7/8" DLO Anchor Group 1 | 2 | 3 | 4 |
|---|---|---|---|---|---|---|---|---|---|---|---|---|---|---|---|---|---|---|
| 24" | 17" DLO | Head/Sill | C4+1 | C4+1 | C4+1 | C4+1 | C4+1 | C4+1 | C4+1 | C4+1 | C4+1 | C4+1 | C4+1 | C4+1 | C4+1 | C4+1 | C4+1 | C4+1 |
| | | Jamb | 8 | 8 | 8 | 8 | 8 | 8 | 8 | 8 | 8 | 8 | 8 | 8 | 8 | 8 | 8 | 8 |
| | | P-hook | 6+7 | 6+7 | 6+7 | 6+7 | 7+8 | 7+8 | 7+8 | 7+8 | 7+8 | 7+8 | 7+8 | 7+8 | 7+8 | 7+8 | 7+8 | 7+8 |
| 30" | 23" DLO | Head/Sill | C4+1 | C4+1 | C4+1 | C4+1 | C4+1 | C4+1 | C4+1 | C4+1 | C4+1 | C4+1 | C4+1 | C4+1 | C4+1 | C4+1 | C4+1 | C4+1 |
| | | Jamb | 8 | 8 | 8 | 8 | 8 | 8 | 8 | 8 | 8 | 8 | 8 | 8 | 8 | 8 | 8 | 8 |
| | | P-hook | 6+7 | 6+7 | 6+7 | 6+7 | 7+8 | 7+8 | 7+8 | 7+8 | 7+8 | 7+8 | 7+8 | 7+8 | 7+8 | 7+8 | 7+8 | 7+8 |
| 36" | 29" DLO | Head/Sill | C4+1 | C4+1 | C4+1 | C4+1 | C4+1 | C4+1 | C4+1 | C4+1 | C4+1 | C4+1 | C4+1 | C4+1 | C4+1 | C4+1 | C4+1 | C4+1 |
| | | Jamb | 8 | 8 | 8 | 8 | 8 | 8 | 8 | 8 | 8 | 8 | 8 | 8 | 8 | 8 | 8 | 8 |
| | | P-hook | 6+7 | 6+7 | 6+7 | 6+7 | 7+8 | 7+8 | 7+8 | 7+8 | 7+8 | 7+8 | 7+8 | 7+8 | 7+8 | 7+8 | 7+8 | 7+8 |
| 42" | 35" DLO | Head/Sill | C4+1 | C4+1 | C4+1 | C4+1 | C4+1 | C4+1 | C4+1 | C4+1 | C4+1 | C4+1 | C4+1 | C4+1 | C4+1 | C4+1 | C4+1 | C4+1 |
| | | Jamb | 8 | 8 | 8 | 8 | 8 | 8 | 8 | 8 | 8 | 8 | 8 | 8 | 8 | 8 | 8 | 8 |
| | | P-hook | 6+7 | 6+7 | 6+7 | 6+7 | 7+8 | 7+8 | 7+8 | 7+8 | 7+8 | 7+8 | 7+8 | 7+8 | 7+8 | 7+8 | 7+8 | 7+8 |
| 48" | 41" DLO | Head/Sill | C4+2 | C4+2 | C4+2 | C4+2 | C4+2 | C4+2 | C4+2 | C4+2 | C4+2 | C4+2 | C4+2 | C4+2 | C4+2 | C4+2 | C4+2 | C4+2 |
| | | Jamb | 8 | 8 | 8 | 8 | 8 | 8 | 8 | 8 | 8 | 8 | 8 | 8 | 8 | 8 | 8 | 8 |
| | | P-hook | 6+7 | 6+7 | 6+7 | 6+7 | 7+8 | 7+8 | 7+8 | 7+8 | 7+8 | 7+8 | 7+8 | 7+8 | 7+8 | 7+8 | 7+8 | 7+8 |
| 54" | 47" DLO | Head/Sill | C4+2 | C4+2 | C4+2 | C4+2 | C4+2 | C4+2 | C4+2 | C4+2 | C4+2 | C4+2 | C4+2 | C4+2 | C4+2 | C4+2 | C4+2 | C4+2 |
| | | Jamb | 8 | 8 | 8 | 8 | 8 | 8 | 8 | 8 | 8 | 8 | 8 | 8 | 8 | 8 | 8 | 8 |
| | | P-hook | 6+7 | 6+7 | 6+7 | 6+7 | 7+8 | 7+8 | 7+8 | 7+8 | 7+8 | 7+8 | 7+8 | 7+8 | 7+8 | 7+8 | 7+8 | 7+8 |
| 60" | 53" DLO | Head/Sill | C4+2 | C4+2 | C4+2 | C4+2 | C4+2 | C4+2 | C4+2 | C4+2 | C4+2 | C4+2 | C4+2 | C4+2 | C4+2 | C4+2 | C5+2 | C5+2 |
| | | Jamb | 8 | 8 | 8 | 8 | 8 | 8 | 8 | 8 | 8 | 8 | 8 | 8 | 8 | 8 | 8 | 8 |
| | | P-hook | 6+7 | 6+7 | 6+7 | 6+7 | 7+8 | 7+8 | 7+8 | 7+8 | 7+8 | 7+8 | 7+8 | 7+8 | 7+8 | 7+8 | 7+8 | 7+8 |

Door Unit Height: 102", 108", 114", 120"

| Nominal Panel Width | DLO | | 102" 91-7/8" DLO Anchor Group 1 | 2 | 3 | 4 | 108" 97-7/8" DLO Anchor Group 1 | 2 | 3 | 4 | 114" 103-7/8" DLO Anchor Group 1 | 2 | 3 | 4 | 120" 109-7/8" DLO Anchor Group 1 | 2 | 3 | 4 |
|---|---|---|---|---|---|---|---|---|---|---|---|---|---|---|---|---|---|---|
| 24" | 17" DLO | Head/Sill | C4+1 | C4+1 | C4+1 | C4+1 | C4+1 | C4+1 | C4+1 | C4+1 | C4+1 | C4+1 | C4+1 | C4+1 | C4+1 | C4+1 | C4+1 | C4+1 |
| | | Jamb | 10 | 10 | 10 | 10 | 10 | 10 | 10 | 10 | 10 | 10 | 10 | 10 | 10 | 10 | 10 | 10 |
| | | P-hook | 8+9 | 8+9 | 8+9 | 8+9 | 8+9 | 8+9 | 8+9 | 8+9 | 9+10 | 9+10 | 9+10 | 9+10 | 9+10 | 9+10 | 9+10 | 9+10 |
| 30" | 23" DLO | Head/Sill | C4+1 | C4+1 | C4+1 | C4+1 | C4+1 | C4+1 | C4+1 | C4+1 | C4+1 | C4+1 | C4+1 | C4+1 | C4+1 | C4+1 | C4+1 | C4+1 |
| | | Jamb | 10 | 10 | 10 | 10 | 10 | 10 | 10 | 10 | 10 | 10 | 10 | 10 | 10 | 10 | 10 | 10 |
| | | P-hook | 8+9 | 8+9 | 8+9 | 8+9 | 8+9 | 8+9 | 8+9 | 8+9 | 9+10 | 9+10 | 9+10 | 9+10 | 9+10 | 9+10 | 9+10 | 9+10 |
| 36" | 29" DLO | Head/Sill | C4+1 | C4+1 | C4+1 | C4+1 | C4+1 | C4+1 | C4+1 | C4+1 | C4+1 | C4+1 | C4+1 | C4+1 | C4+1 | C4+1 | C4+1 | C4+1 |
| | | Jamb | 10 | 10 | 10 | 10 | 10 | 10 | 10 | 10 | 10 | 10 | 10 | 10 | 10 | 10 | 10 | 10 |
| | | P-hook | 8+9 | 8+9 | 8+9 | 8+9 | 8+9 | 8+9 | 8+9 | 8+9 | 9+10 | 9+10 | 9+10 | 9+10 | 9+10 | 9+10 | 9+10 | 9+10 |
| 42" | 35" DLO | Head/Sill | C4+1 | C4+1 | C4+1 | C4+1 | C4+1 | C4+1 | C4+1 | C4+1 | C4+1 | C4+1 | C5+1 | C5+1 | C4+1 | C4+1 | C5+1 | C5+1 |
| | | Jamb | 10 | 10 | 10 | 10 | 10 | 10 | 10 | 10 | 10 | 10 | 10 | 10 | 10 | 10 | 10 | 10 |
| | | P-hook | 8+9 | 8+9 | 8+9 | 8+9 | 8+9 | 8+9 | 8+9 | 8+9 | 9+10 | 9+10 | 9+10 | 9+10 | 9+10 | 9+10 | 9+10 | 9+10 |
| 48" | 41" DLO | Head/Sill | C4+2 | C4+2 | C4+2 | C4+2 | C4+2 | C4+2 | C5+2 | C5+2 | C4+2 | C5+2 | C5+2 | C5+2 | C5+2 | C5+2 | C5+2 | C5+2 |
| | | Jamb | 10 | 10 | 10 | 10 | 10 | 10 | 10 | 10 | 10 | 10 | 10 | 10 | 10 | 10 | 10 | 10 |
| | | P-hook | 8+9 | 8+9 | 8+9 | 8+9 | 8+9 | 8+9 | 8+9 | 8+9 | 9+10 | 9+10 | 9+10 | 9+10 | 9+10 | 9+10 | 9+10 | 9+10 |
| 54" | 47" DLO | | Not available in these sizes | | | | | | | | | | | | | | | |
| 60" | 53" DLO | | Not available in these sizes | | | | | | | | | | | | | | | |

◯ = EXAMPLE ON SHEET 9

NOTES:

1) POSITIVE PRESSURES IN TABLE 2 ARE BASED ON THE USE OF THE 3-1/4" SILL.

2) WHEN USING THE 2-1/2" SILL, POSITIVE WATER DP IS 46.67 PSF MAX. WHEN USING THE 3-1/4" SILL, POSITIVE WATER DP IS 60.0 PSF MAX. WHEN USING THE 4" SILL, POSITIVE WATER DP IS 60.0 PSF MAX (NEGATIVE PRES. UNCHANGED). SEE TABLE 2A.

3) 4", 3-1/4" AND 2-1/2" SILL HEIGHTS ARE TESTED FOR WATER INFILTRATION WHEREAS THE 1-1/2" SILL IS NOT AND MUST ONLY BE USED WHERE WATER RESISTANCE IS NOT REQUIRED. MAX. POSITIVE DESIGN PRESSURES SHOWN IN TABLE 2 MAY BE USED WHEN THE DOOR IS PROTECTED BY AN OVERHANG COMPLYING WITH THE CURRENT FBC (SEE ADJACENT DIAGRAM); THIS CONDITION IS NOT RATED FOR WATER INFILTRATION.

4) SEE SHEETS 10-14 FOR ANCHORAGE SPACING, EDGE DISTANCE AND EMBEDMENT INFORMATION.

5) DOOR SIZE TO COMPLY WITH CURRENT FBC EGRESS REQUIREMENTS WHEN REQUIRED.

6) JAMB ANCHORS ARE SPECIFIED AS THE TOTAL QUANTITY, DIVIDE BY 2 FOR PAIRS TO BE INSTALLED.

TABLE 2A:

| Sill Height to Max. (+) DP<br>(Water Infiltration Rating) | |
|---|---|
| Sill Riser Height (Flat or Box, see Sheet 17) | (+) Design Pressure, psf |
| Flush - 1-1/2" | see note 3 |
| Low - 2-1/2" | + 46.67 |
| Medium - 3-1/4" | + 60.0 |
| High - 4" | + 60.0 |

SEE NOTES 1-3

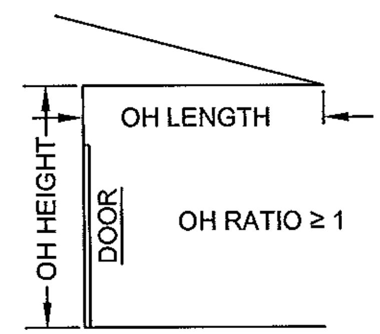


$$\text{OH RATIO} = \frac{\text{OH LENGTH}}{\text{OH HEIGHT}}$$

DLO WIDTH = NOM. PANEL WIDTH - 7"

DLO HEIGHT = DOOR UNIT HEIGHT - 10.125"

PANEL HEIGHT = DOOR UNIT HEIGHT - 1.866"

THE FOLLOWING STILE & ASTRAGAL TYPES SHALL BE USED FOR TABLE 2, SEE SHEETS 21 & 22 FOR PART DIMENSIONS AND SHEETS 18 & 19 FOR ASSEMBLY DETAILS.

| Interlock | P-hook | Lockstile @ Jamb | Straight Astragal Assembly | Lockstile @ Straight Astragal | 90° Astragal Assembly | Lockstile @ 90° Astragal | 135° Astragal Assembly | Lockstile @ 135° Astragal |
|---|---|---|---|---|---|---|---|---|
| Heavy-duty Stiles | Heavy-duty Stile | Heavy-duty Stile | Heavy-duty Stile<br>Standard Astragal | Heavy-duty Stile | Heavy-duty Stile | Heavy-duty Stile | Heavy-duty Stile | Heavy-duty Stile |
| 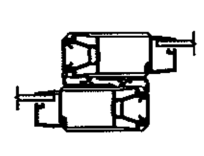 | 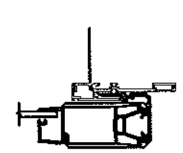 | 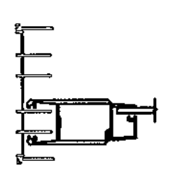 | 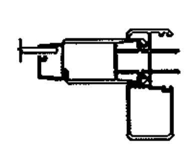 | | 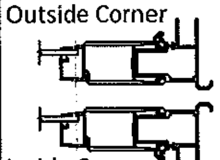 Outside Corner / Inside Corner | 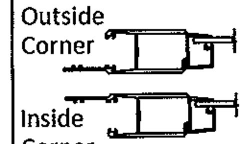 Outside Corner / Inside Corner | 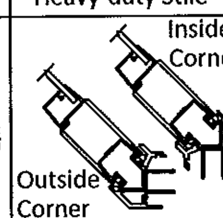 Inside Corner / Outside Corner | |
| Part #61 (x2) | Part #61 | Part #61 | Part #61 (Stile)<br>Part #67 (Astragal) | Part #61 | Part #61 (Stile)<br>Part #118 (Corner Receiver) | Part #119 (Out.)<br>Part #120 (In.) | Part #61 (Stile)<br>Parts #31 & #32 (Corn. & Fxd Mount) | Part #61 |

PRODUCT RENEWED as complying with the Florida Building Code
Acceptance No 14-0128.11
Expiration Date 02/17/2020
By [signature]
Miami Dade Product Control

ANTHONY LYNN MILLER
LICENSE
No. 58705
STATE OF FLORIDA
PROFESSIONAL ENGINEER
1/30/15
A. LYNN MILLER, P.E.
P.E.# 58705

| Revsd By: | Date: | Revisions: |
|---|---|---|
| Revsd By: | Date: | Revisions: |
| Revsd By: | Date: | Revisions: |
| Drawn By: JR | Date: 10/10/14 | Checked By: Date: |

1070 TECHNOLOGY DRIVE
N. VENICE, FL 34275
(941)-480-1600
CERT. OF AUTH. #29296

PGT®

Description: DP AND ANCHORAGE

Title: SERIES 770 ALUM. SGD - LM IMPACT

| Series/Model: | Scale: | Sheet: | Drawing No. | Rev: |
|---|---|---|---|---|
| SGD-770 | NTS | 7 of 22 | PGT0130 | |

TABLE 3:

**Design Pressure (DP) and Anchor Quantities Required, (for all approved configurations on Sheets 2 & 3)**
For corner astragal anchorage on 90° or 135° corner units, see sheet 11

**Maximum DP shown below**
(May be limited by Table 3A)

Table applies to Glass Types 4, 4A, 6, 6A, 7, 7A, 8 & 8A and the Stile / Astragal types shown below.

| Nominal Panel Width | | | Door Unit Height | | | | | | | | | | | | | | | | | | | | | | | | | |
|---|---|---|---|---|---|---|---|---|---|---|---|---|---|---|---|---|---|---|---|---|---|---|---|---|---|---|---|---|
| | | | 80" | | | | 84" | | | | 90" | | | | 96" | | | | 102" | | | | 108" | | | |
| | | | 69-7/8" DLO | | | | 73-7/8" DLO | | | | 79-7/8" DLO | | | | 85-7/8" DLO | | | | 91-7/8" DLO | | | | 97-7/8" DLO | | | |
| | | | Anchor Group | | | | Anchor Group | | | | Anchor Group | | | | Anchor Group | | | | Anchor Group | | | | Anchor Group | | | |
| | | | 1 | 2 | 3 | 4 | 1 | 2 | 3 | 4 | 1 | 2 | 3 | 4 | 1 | 2 | 3 | 4 | 1 | 2 | 3 | 4 | 1 | 2 | 3 | 4 |
| | | | *Design Pressure* | *+/-90.0 psf* | | | | | | | | | | | | | | | *+/-82.5 psf* | | | | *+/-75.0 psf* | | | |
| 24" | 17" DLO | Head/Sill | C4+1 | C4+1 | C4+1 | C4+1 | C4+1 | C4+1 | C4+1 | C4+1 | C4+1 | C4+1 | C4+1 | C4+1 | C4+1 | C4+1 | C4+1 | C4+1 | C4+1 | C4+1 | C4+1 | C4+1 | C4+1 | C4+1 | C4+1 | C4+1 |
| | | Jamb | 8 | 8 | 8 | 8 | 8 | 8 | 8 | 8 | 8 | 8 | 8 | 8 | 8 | 8 | 8 | 8 | 10 | 10 | 10 | 10 | 10 | 10 | 10 | 10 |
| | | P-hook | 6+7 | 6+7 | 6+7 | 6+7 | 7+8 | 7+8 | 7+8 | 7+8 | 7+8 | 7+8 | 7+8 | 7+8 | 7+8 | 7+8 | 7+8 | 7+8 | 8+9 | 8+9 | 8+9 | 8+9 | 8+9 | 8+9 | 8+9 | 8+9 |
| 30" | 23" DLO | *Design Pressure* | *+/-90.0 psf* | | | | | | | | | | | | | | | | *+/-82.5 psf* | | | | *+/-75.0 psf* | | | |
| | | Head/Sill | C4+1 | C4+1 | C4+1 | C4+1 | C4+1 | C4+1 | C4+1 | C4+1 | C4+1 | C4+1 | C4+1 | C4+1 | C4+1 | C4+1 | C4+1 | C4+1 | C4+1 | C4+1 | C4+1 | C4+1 | C4+1 | C4+1 | C4+1 | C4+1 |
| | | Jamb | 8 | 8 | 8 | 8 | 8 | 8 | 8 | 8 | 8 | 8 | 8 | 8 | 8 | 8 | 8 | 8 | 10 | 10 | 10 | 10 | 10 | 10 | 10 | 10 |
| | | P-hook | 6+7 | 6+7 | 6+7 | 6+7 | 7+8 | 7+8 | 7+8 | 7+8 | 7+8 | 7+8 | 7+8 | 7+8 | 7+8 | 7+8 | 7+8 | 7+8 | 8+9 | 8+9 | 8+9 | 8+9 | 8+9 | 8+9 | 8+9 | 8+9 |
| 36" | 29" DLO | *Design Pressure* | *+/-90.0 psf* | | | | | | | | | | | | | | | | *+/-82.5 psf* | | | | *+/-75.0 psf* | | | |
| | | Head/Sill | C4+1 | C4+1 | C4+2 | C4+2 | C4+1 | C4+1 | C4+2 | C4+2 | C4+1 | C4+1 | C5+2 | C5+2 | C4+1 | C4+1 | C5+2 | C5+2 | C4+1 | C4+1 | C5+1 | C5+1 | C4+1 | C4+1 | C5+1 | C5+1 |
| | | Jamb | 8 | 8 | 8 | 8 | 8 | 8 | 8 | 8 | 8 | 8 | 8 | 8 | 8 | 8 | 10 | 8 | 10 | 10 | 10 | 10 | 10 | 10 | 10 | 10 |
| | | P-hook | 6+7 | 6+7 | 6+7 | 6+7 | 7+8 | 7+8 | 7+8 | 7+8 | 7+8 | 7+8 | 7+8 | 7+8 | 7+8 | 8+9 | 8+9 | 8+9 | 8+9 | 8+9 | 8+9 | 8+9 | 8+9 | 8+9 | 8+9 | 8+9 |
| 42" | 35" DLO | *Design Pressure* | *+/-90.0 psf* | | | | | | | | | | | | | | | | *+/-82.5 psf* | | | | *+/-75.0 psf* | | | |
| | | Head/Sill | C4+2 | C4+2 | C4+2 | C4+2 | C4+2 | C4+2 | C5+2 | C5+2 | C5+2 | C5+2 | C5+2 | C5+2 | C5+2 | C5+2 | C5+2 | C5+2 | C5+2 | C5+2 | C5+2 | C5+2 | C5+2 | C5+2 | C5+2 | C5+2 |
| | | Jamb | 8 | 8 | 8 | 8 | 8 | 8 | 8 | 8 | 8 | 8 | 10 | 8 | 8 | 8 | 10 | 8 | 10 | 10 | 10 | 10 | 10 | 10 | 10 | 10 |
| | | P-hook | 6+7 | 7+8 | 7+8 | 7+8 | 7+8 | 7+8 | 7+8 | 7+8 | 7+8 | 8+9 | 8+9 | 8+9 | 8+9 | 8+9 | 8+9 | 8+9 | 8+9 | 8+9 | 8+9 | 8+9 | 8+9 | 8+9 | 8+9 | 8+9 |
| 48" | 41" DLO | *Design Pressure* | *+/-90.0 psf* | | | | | | | | | | | | *See Note A below.* | | | | *+/-82.5 psf* | | | | *+/-75.0 psf* | | | |
| | | Head/Sill | C4+2 | C4+2 | C5+2 | C5+2 | C4+2 | C5+2 | C5+2 | C5+2 | C5+2 | C5+2 | C5+2 | C5+2 | C5+2 | C5+2 | C6+2 | C6+2 | C5+2 | C5+2 | C6+2 | C6+2 | C5+2 | C5+2 | C6+2 | C6+2 |
| | | Jamb | 8 | 8 | 8 | 8 | 8 | 8 | 10 | 8 | 8 | 8 | 10 | 8 | 8 | 8 | 10 | 8 | 10 | 10 | 10 | 10 | 10 | 10 | 10 | 10 |
| | | P-hook | 6+7 | 7+8 | 7+8 | 7+8 | 7+8 | 8+9 | 8+9 | 8+9 | 8+9 | 8+9 | 8+9 | 8+9 | 8+9 | 9+10 | 9+10 | 9+10 | 8+9 | 9+10 | 9+10 | 9+10 | 8+9 | 9+10 | 9+10 | 9+10 |

FOR EXAMPLE ON USING TABLE, SEE SHEET 7.

NOTE A: +/-90.0 PSF FOR GLASS TYPES 4, 4A, 6, 6A, 7A, 8 & 8A; +/-87.1 FOR GLASS TYPE 7

TABLE 3A:

**Sill Height to Max. (+) DP**
(Water Infiltration Rating)

| Sill Riser Height (Flat or Box, see Sheet 17) | (+) Design Pressure, psf |
|---|---|
| Flush - 1-1/2" | see note 3 |
| Low - 2-1/2" | + 46.67 |
| Medium - 3-1/4" | + 60.0 |
| High - 4" | + 90.0 |

SEE NOTES 1-3

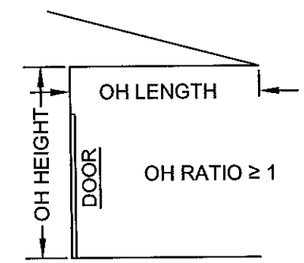


$$\text{OH RATIO} = \frac{\text{OH LENGTH}}{\text{OH HEIGHT}}$$

NOTES:

1) POSITIVE PRESSURES IN TABLE 3 ARE BASED ON THE USE OF THE 4" SILL.
2) WHEN USING THE 2-1/2" SILL, POSITIVE WATER DP IS 46.67 PSF MAX. WHEN USING THE 3-1/4" SILL, POSITIVE WATER DP IS 60.0 PSF MAX. WHEN USING THE 4" SILL, POSITIVE WATER DP IS 90.0 PSF MAX (NEGATIVE PRESSURES UNCHANGED). SEE TABLE 3A.
3) 4", 3-1/4" AND 2-1/2" SILL HEIGHTS ARE TESTED FOR WATER INFILTRATION WHEREAS THE 1-1/2" SILL IS NOT AND MUST ONLY BE USED WHERE WATER RESISTANCE IS NOT REQUIRED. MAX. POSITIVE DESIGN PRESSURES SHOWN IN TABLE 3 MAY BE USED WHEN THE DOOR IS PROTECTED BY AN OVERHANG COMPLYING WITH THE CURRENT FLORIDA BUILDING CODE (SEE ADJACENT DIAGRAM); THIS CONDITION IS NOT RATED FOR WATER INFILTRATION.
4) SEE SHEETS 10-14 FOR ANCHORAGE SPACING, EDGE DISTANCE AND EMBEDMENT INFORMATION.
5) DOOR SIZE TO COMPLY WITH CURRENT FBC EGRESS REQUIREMENTS WHEN REQUIRED.
6) JAMB ANCHORS ARE SPECIFIED AS THE TOTAL QUANTITY, DIVIDE BY 2 FOR PAIRS TO BE INSTALLED.

DLO WIDTH =
NOM. PANEL WIDTH - 7"

DLO HEIGHT =
DOOR UNIT HEIGHT - 10.125"

PANEL HEIGHT =
DOOR UNIT HEIGHT - 1.866"

THE FOLLOWING STILE & ASTRAGAL TYPES SHALL BE USED FOR TABLE 3, SEE SHEETS 21 & 22 FOR PART DIMENSIONS AND SHEETS 18 & 19 FOR ASSEMBLY DETAILS.

| Interlock | P-hook | Lockstile @ Jamb | Straight Astragal Assembly | Lockstile @ Straight Astragal | 90° Astragal Assembly | Lockstile @ 90° Astragal | 135° Astragal Assembly | Lockstile @ 135° Astragal |
|---|---|---|---|---|---|---|---|---|
| Heavy-duty Stiles | Heavy-duty Stile | Heavy-duty Stile | Heavy-duty Stile | Heavy-duty Stile | Heavy-duty Stile | Heavy-duty Stile | Heavy-duty Stile | Heavy-duty Stile |
| 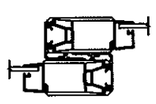 | 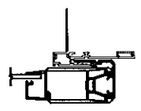 | 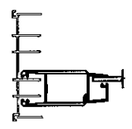 | Heavy-duty Astragal 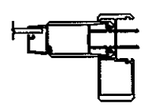 | 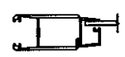 | Outside Corner 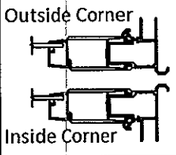 Inside Corner | Outside Corner Inside Corner | Inside Corner 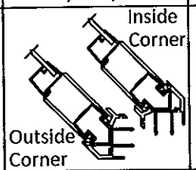 Outside Corner | 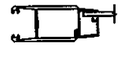 |
| Part #61 (x2) | Part #61 | Part #61 | Part #61 (Stile) Part #68 (Astragal) | Part #61 | Part #61 (Stile) Part #118 (Corner Receiver) | Part #119 (Out.) Part #120 (In.) | Part #61 (Stile) Parts #31 & #32 (Corn. & Fxd Mount) | Part #61 |

PRODUCT RENEWED
as complying with the Florida
Building Code
Acceptance No 14-0128.11
Expiration Date 02/17/2020
By
Miami Dade Product Control

ANTHONY LYNN MILLER
LICENSE
No. 58705
STATE OF FLORIDA
PROFESSIONAL ENGINEER
A. LYNN MILLER, P.E.
P.E.# 58705

| Revsd By: | Date: | Revisions: | |
|---|---|---|---|
| Revsd By: | Date: | Revisions: | |
| Revsd By: | Date: | Revisions: | |
| Drawn By: JR | Date: 10/10/14 | Checked By: | Date: |

1070 TECHNOLOGY DRIVE
N. VENICE, FL 34275
(941)-480-1600
CERT. OF AUTH. #29296

Description: DP AND ANCHORAGE
Title: SERIES 770 ALUM. SGD - LM IMPACT

| Series/Model: | Scale: | Sheet: | Drawing No. | Rev: |
|---|---|---|---|---|
| SGD-770 | NTS | 8 of 22 | PGT0130 | |

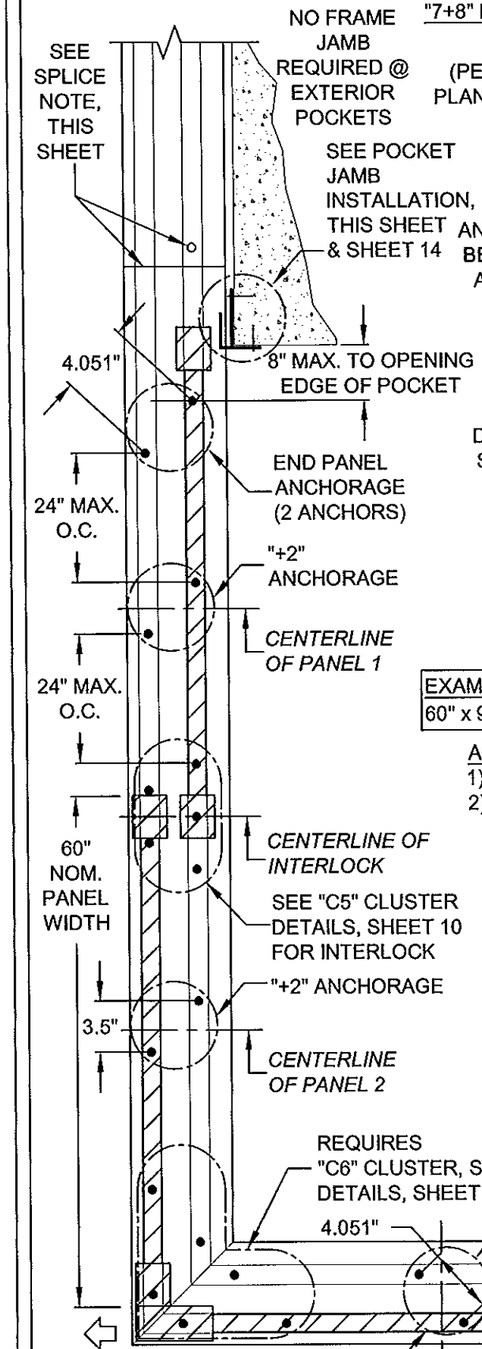


"7+8" P-HOOK ANCHORAGE CONSISTS OF:

(7) P-HOOK ANCHORS, (PERPENDICULAR TO GLASS PLANE) SEE TABLE 2, SHEET 7

AND

(8) P-HOOK MOUNTING ADAPTER ANCHORS MIDWAY BETWEEN P-HOOK ANCHORS & AT 3" FROM TOP & BOTTOM

SEE INSTALLATION DETAILS 'Jc' & 'Kc', SHEET 14 & PART DETAILS 'J' & 'K', SHEET 19 FOR P-HOOK ANCHORS

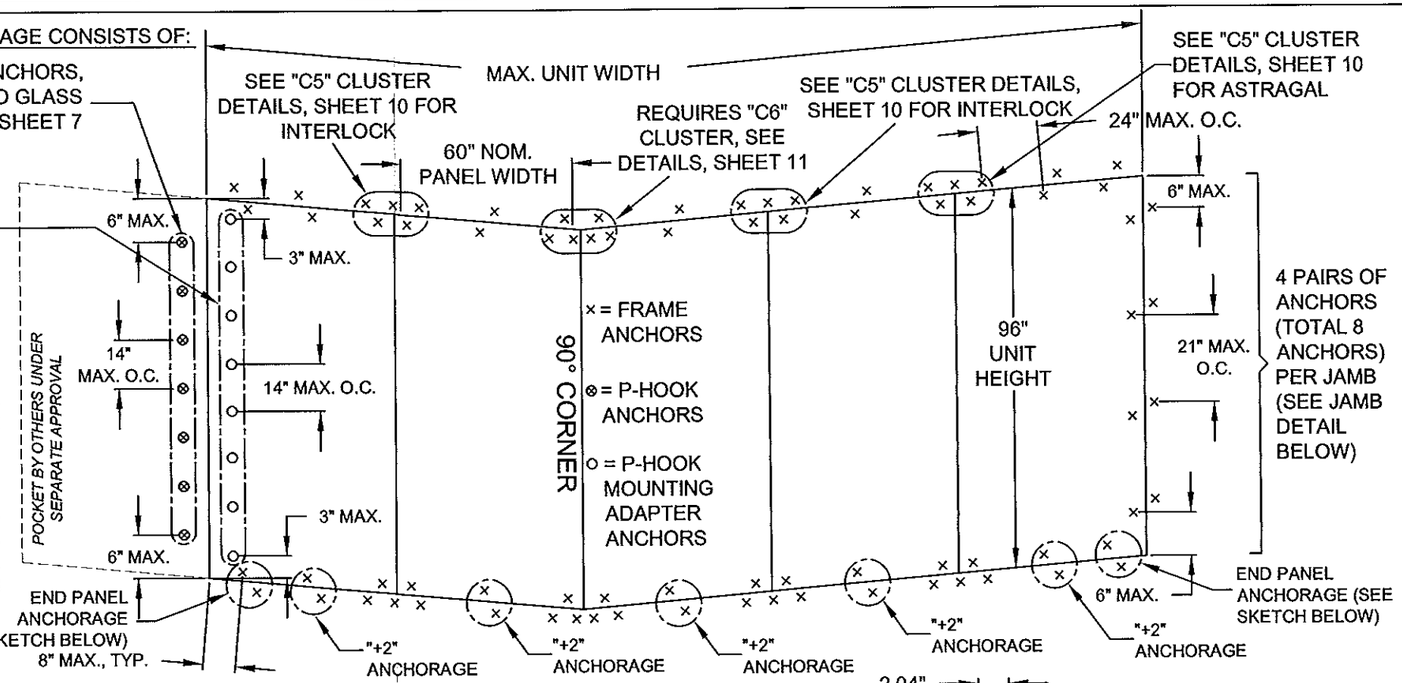


EXAMPLE: 5-PANEL, 2 TRACK, 90° OUTSIDE CORNER - pXX/XXO - EXT. MOUNT POCKET ANCHORAGE PLAN:
60" x 96" NOM. PANELS, ANCHOR GROUP 3 IN CONCRETE SUBSTRATE (SEE TABLE 2, SHEET 7)

ANCHORAGE EXAMPLE NOTES:

1) APPROVED ANCHORS: SEE TABLE A, SHEET 1
2) ANCHOR LOCATION SPACING FOR ANCHOR QUANTITIES SPECIFIED IN TABLES 1-3, SHEETS 6-8:

HEAD & SILL: 8" MAX. FROM FRAME CORNERS. USE SPECIFIED CLUSTER FROM APPROPRIATE TABLES, SHEETS 6-8 AT EACH INTERLOCK AND STRAIGHT AND CORNER ASTRAGAL LOCATION, PLUS SPECIFIED QUANTITY OF ADDITIONAL INTERMEDIATE ANCHORS PER PANEL. ADDITIONAL ANCHORS 24" O.C. MAXIMUM.

ANCHORS AT THE MIDPOINT OF END PANELS ARE ONLY REQUIRED IF THE O.C. DISTANCE TO THE NEXT ANCHOR CLUSTER IS OVER 24", OTHERWISE ANCHORS ARE NOT REQUIRED AS PER THE FIGURE AT RIGHT:

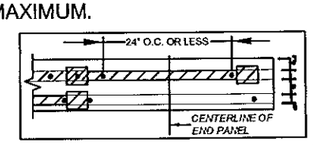


JAMBS & P-HOOKS: 6" MAX. FROM BOTTOM, 21" MAX. ANCHOR PAIR O.C. (JAMBS), 14" MAX. ANCHOR O.C. (P-HOOK) UTILIZING ANCHOR QUANTITIES FROM APPROPRIATE TABLES, SHEETS 6-8. SEE P-HOOK ANCHOR DETAILS ON SHEET 14.

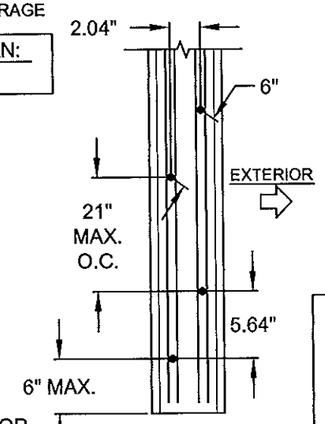


2-TRACK FRAME JAMB ANCHOR PAIR

SPLICE NOTE:
NON- STRUCTURAL ANCHORS MAY BE ADDED AS NEEDED TO ALIGN THE HEAD OR SILL IF A SPLICE OCCURS AT THE P-HOOK.

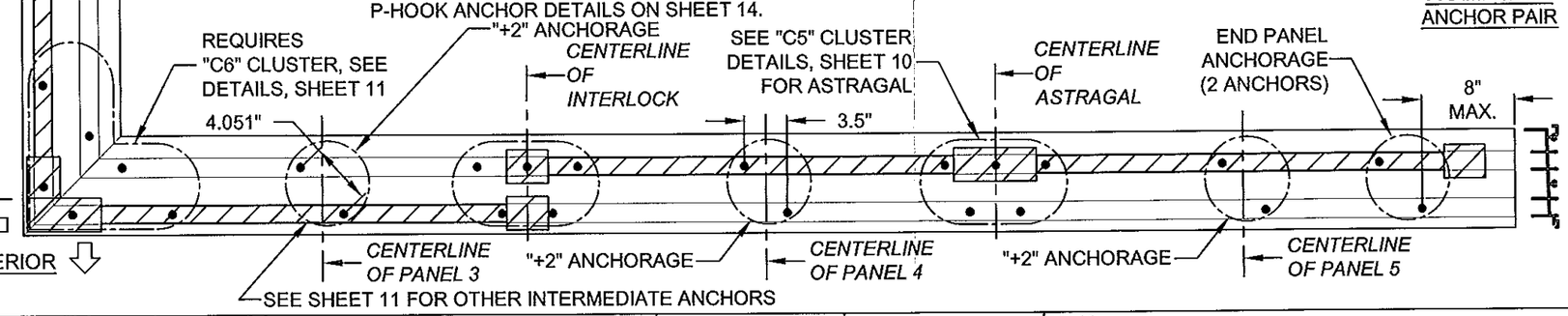


PRODUCT RENEWED
as complying with the Florida Building Code
Acceptance No 14-0128.11
Expiration Date 02/17/2020
By
Miami Dade Product Control

ANTHONY LYNN MILLER LICENSE No. 58705 STATE OF FLORIDA PROFESSIONAL ENGINEER
7/30/15
A. LYNN MILLER, P.E.
P.E.# 58705

| Revsd By: | Date: | Revisions: | |
|---|---|---|---|
| Revsd By: | Date: | Revisions: | |
| Revsd By: | Date: | Revisions: | |
| Drawn By: JR | Date: 10/10/14 | Checked By: | Date: |

1070 TECHNOLOGY DRIVE
N. VENICE, FL 34275
(941)-480-1600
CERT. OF AUTH. #29296

PGT®

Description: ANCHORAGE SPACING & EXAMPLE PLANS
Title: SERIES 770 ALUM. SGD - LM IMPACT

| Series/Model: | Scale: | Sheet: | Drawing No. | Rev: |
|---|---|---|---|---|
| SGD-770 | NTS | 9 of 22 | PGT0130 | |

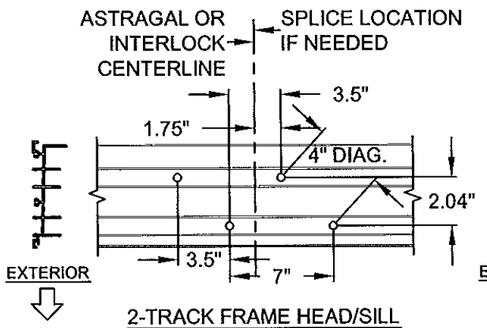


2-TRACK FRAME HEAD/SILL
@ ASTRAGAL OR INTERLOCK
(USE WHERE 4 CLUSTER ANCHORS ARE REQUIRED, "C4")

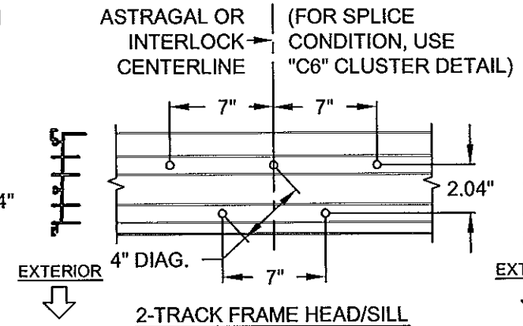


2-TRACK FRAME HEAD/SILL
@ ASTRAGAL OR INTERLOCK
(USE WHERE 5 CLUSTER ANCHORS ARE REQUIRED, "C5")

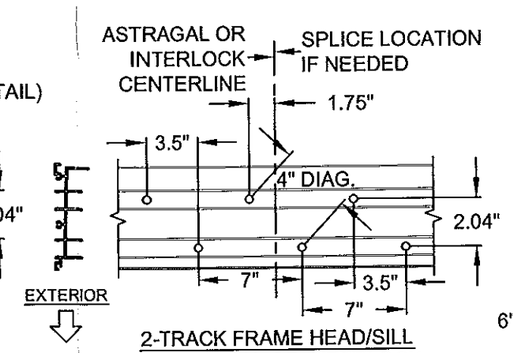


2-TRACK FRAME HEAD/SILL
@ ASTRAGAL OR INTERLOCK
(USE WHERE 6 CLUSTER ANCHORS ARE REQUIRED, "C6")

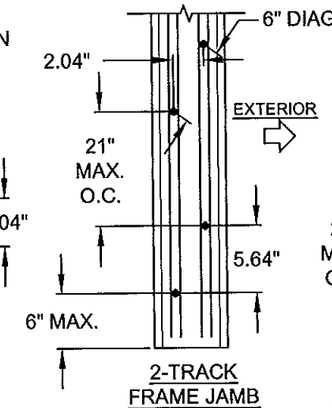


2-TRACK FRAME JAMB ANCHOR PAIR

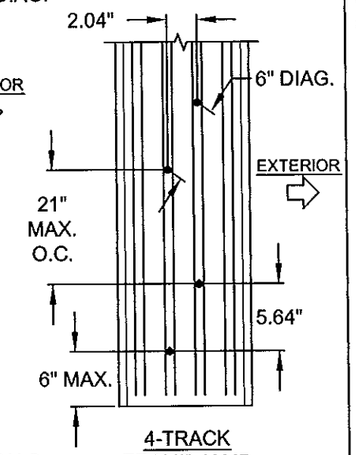


4-TRACK FRAME JAMB ANCHOR PAIR

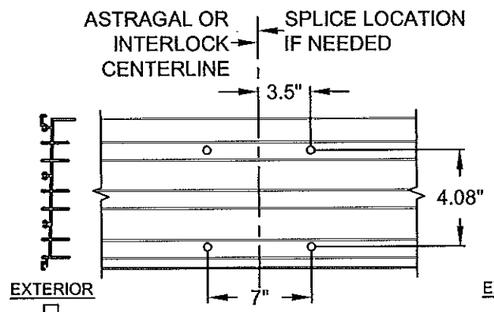


3-TRACK FRAME HEAD/SILL
@ ASTRAGAL OR INTERLOCK
(USE WHERE 4 CLUSTER ANCHORS ARE REQUIRED, "C4")

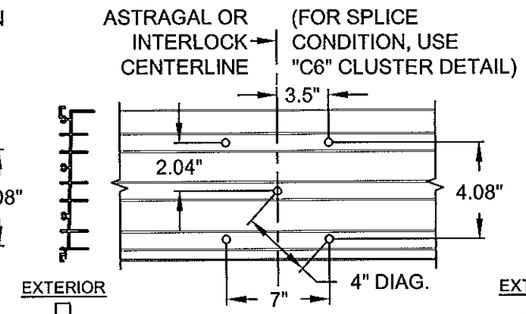


3-TRACK FRAME HEAD/SILL
@ ASTRAGAL OR INTERLOCK
(USE WHERE 5 CLUSTER ANCHORS ARE REQUIRED, "C5")

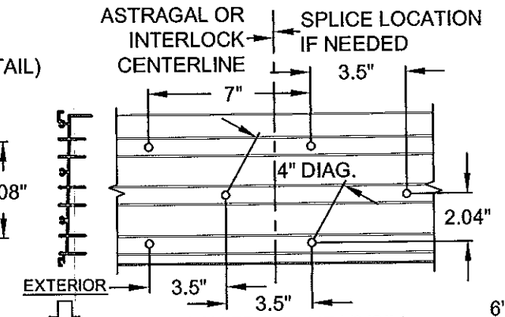


3-TRACK FRAME HEAD/SILL
@ ASTRAGAL OR INTERLOCK
(USE WHERE 6 CLUSTER ANCHORS ARE REQUIRED, "C6")

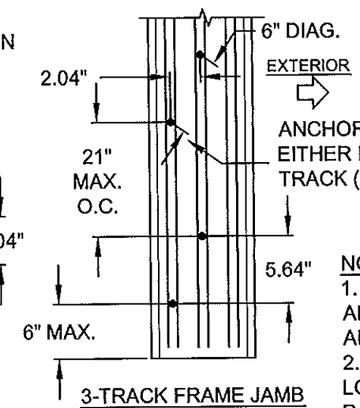


3-TRACK FRAME JAMB ANCHOR PAIR

ANCHORS MAY BE INSTALLED EITHER IN THE EXT. OR INT. TRACK (INT. SHOWN)

NOTES:
1. ALL DIMENSIONS SHOWN ARE BASED ON MIN. ALLOWED.
2. FOR HEAD OR SILL SPLICE LOCATIONS/ANCHORAGE AT P-HOOK SEE SHEET 9.

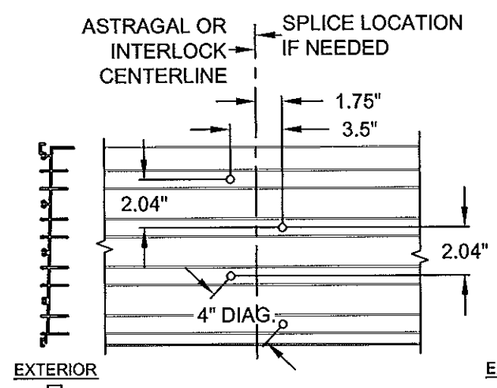


4-TRACK FRAME HEAD/SILL
@ ASTRAGAL OR INTERLOCK
(USE WHERE 4 CLUSTER ANCHORS ARE REQUIRED, "C4")

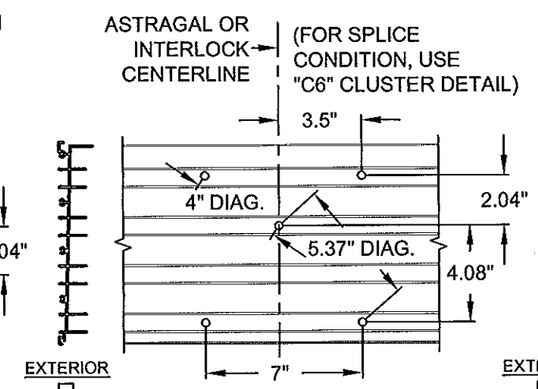


4-TRACK FRAME HEAD/SILL
@ ASTRAGAL OR INTERLOCK
(USE WHERE 5 CLUSTER ANCHORS ARE REQUIRED, "C5")

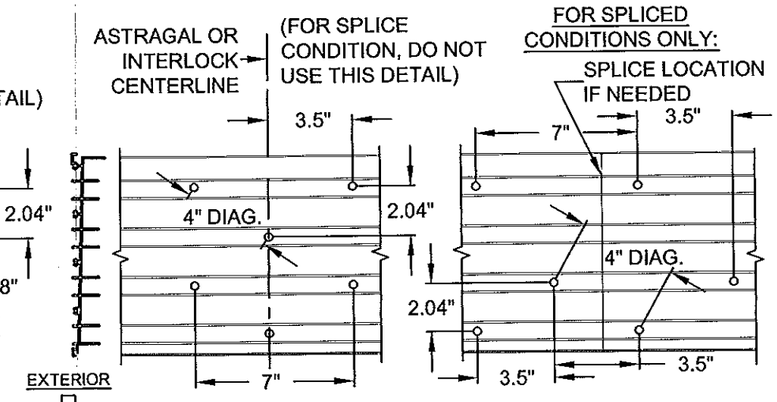


4-TRACK FRAME HEAD/SILL
@ ASTRAGAL OR INTERLOCK
(USE WHERE 6 CLUSTER ANCHORS ARE REQUIRED, "C6")
WITH & WITHOUT SPLICE CONDITION

PRODUCT RENEWED
as complying with the Florida Building Code
Acceptance No 14-0128.11
Expiration Date 02/17/2020
By
Miami Dade Product Control

ANTHONY LYNN MILLER
LICENSE
No. 58705
STATE OF FLORIDA
PROFESSIONAL ENGINEER
7/30/15
A. LYNN MILLER, P.E.
P.E.# 58705

| Revsd By: | Date: | Revisions: | |
|---|---|---|---|
| Revsd By: | Date: | Revisions: | |
| Revsd By: | Date: | Revisions: | |
| Drawn By: JR | Date: 10/10/14 | Checked By: | Date: |

1070 TECHNOLOGY DRIVE
N. VENICE, FL 34275
(941)-480-1600
CERT. OF AUTH. #29296

PGT®

Description: ANCHORAGE, EXAMPLE CLUSTERS
Title: SERIES 770 ALUM. SGD - LM IMPACT

| Series/Model: | Scale: | Sheet: | Drawing No. | Rev: |
|---|---|---|---|---|
| SGD-770 | NTS | 10 of 22 | PGT0130 | |

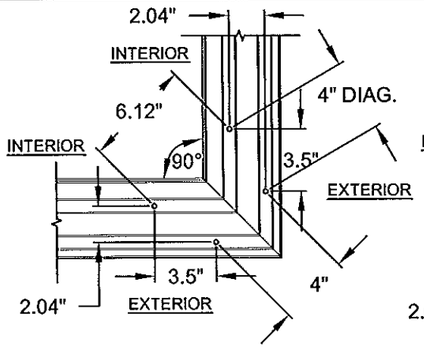


90° CORNER
2-TRACK FRAME HEAD/SILL
(USE WHERE 4 CLUSTER ANCHORS ARE REQUIRED, "C4")

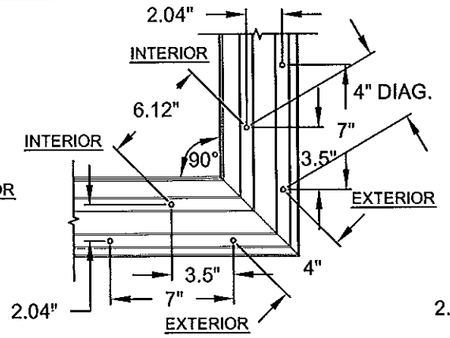


90° CORNER
2-TRACK FRAME HEAD/SILL
(USE WHERE 5 OR 6 CLUSTER ANCHORS ARE REQUIRED, "C6")

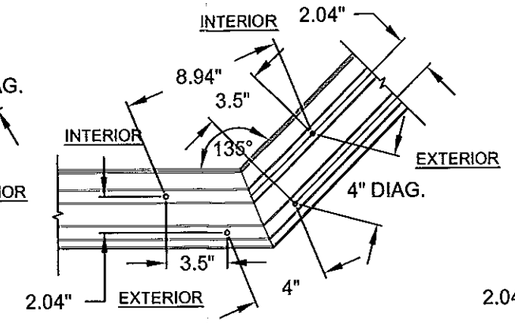


135° CORNER
2-TRACK FRAME HEAD/SILL
(USE WHERE 4 CLUSTER ANCHORS ARE REQUIRED, "C4")

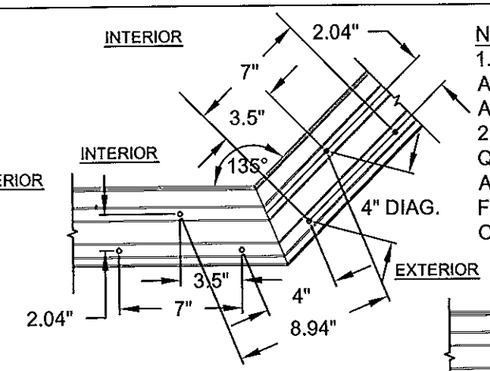


135° CORNER
2-TRACK FRAME HEAD/SILL
(USE WHERE 5 OR 6 CLUSTER ANCHORS ARE REQUIRED, "C6")

NOTES:
1. ALL DIMENSIONS SHOWN ARE BASED ON MINIMUM ALLOWED.
2. DETAILS DEPICT ANCHOR QUANTITY AND SPACING, AND WOULD BE IDENTICAL FOR EXTERIOR OR INTERIOR CORNER CONFIGURATIONS.

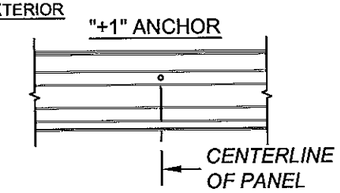


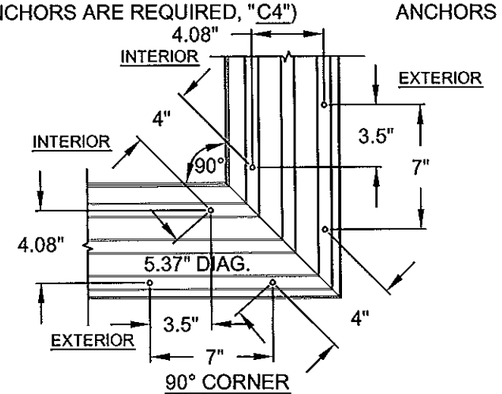


90° CORNER
3-TRACK FRAME HEAD/SILL
("C6" ANCHOR CLUSTER REQUIRED AT ALL 3-TRACK CORNERS)

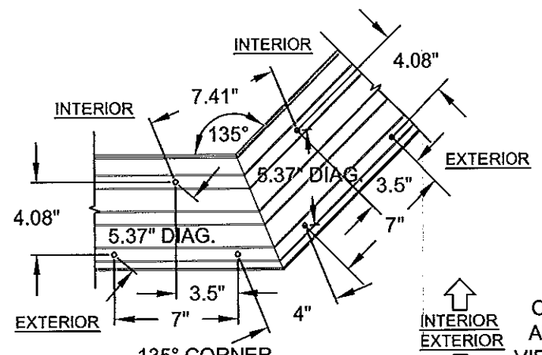


135° CORNER
3-TRACK FRAME HEAD/SILL
("C6" ANCHOR CLUSTER REQUIRED AT ALL 3-TRACK CORNERS)

INTERIOR
EXTERIOR
ON ALL VIEWS

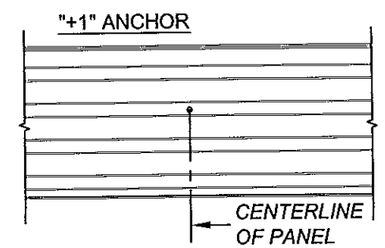


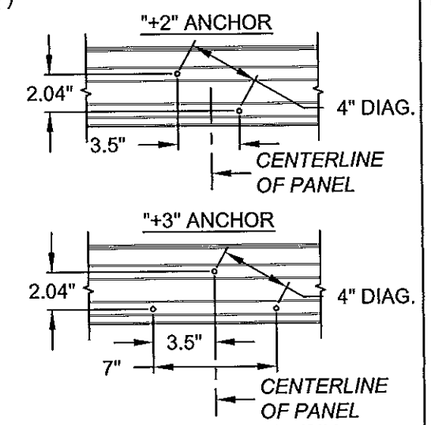


2-TRACK FRAME HEAD/SILL
INTERMEDIATE ANCHOR LAYOUT

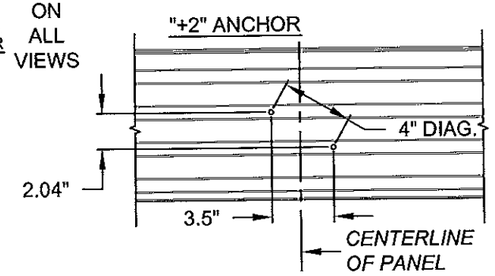


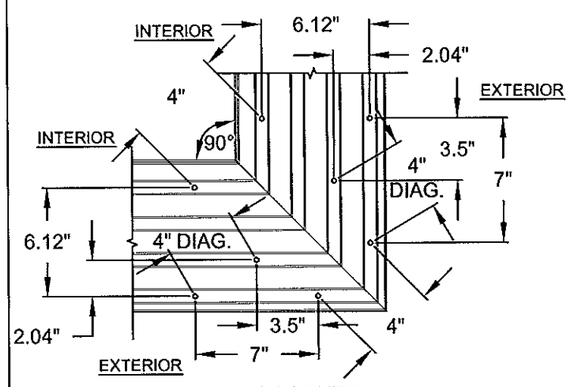


90° CORNER
4-TRACK FRAME HEAD/SILL
("C8" ANCHOR CLUSTER REQUIRED AT ALL 4-TRACK CORNERS)

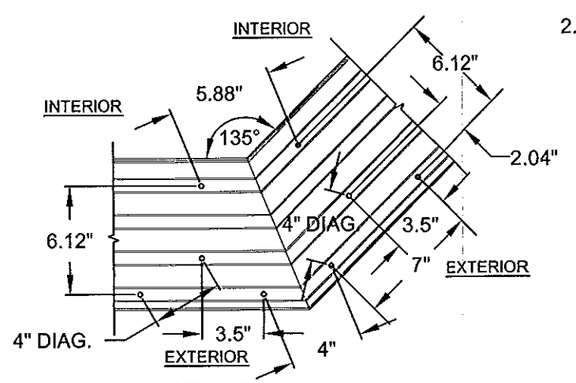


135° CORNER
4-TRACK FRAME HEAD/SILL
("C8" ANCHOR CLUSTER REQUIRED AT ALL 4-TRACK CORNERS)

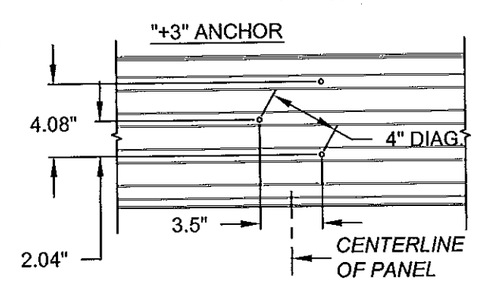


4-TRACK FRAME HEAD/SILL
INTERMEDIATE ANCHOR LAYOUT
(3-TRACK SIMILAR)

PRODUCT RENEWED
as complying with the Florida Building Code
Acceptance No 14-0128.11
Expiration Date 02/17/2020
By
Miami Dade Product Control

ANTHONY LYNN MILLER
LICENSE
No. 58705
1/30/15
STATE OF FLORIDA
PROFESSIONAL ENGINEER
A. LYNN MILLER, P.E.
P.E.# 58705

| Revsd By: | Date: | Revisions: | |
|---|---|---|---|
| Revsd By: | Date: | Revisions: | |
| Revsd By: | Date: | Revisions: | |
| Drawn By: JR | Date: 10/10/14 | Checked By: | Date: |

1070 TECHNOLOGY DRIVE
N. VENICE, FL 34275
(941)-480-1600
CERT. OF AUTH. #29296

PGT®

Description: ANCHORAGE, EXAMPLE CLUSTERS
Title: SERIES 770 ALUM. SGD - LM IMPACT

| Series/Model: | Scale: | Sheet: | Drawing No. | Rev: |
|---|---|---|---|---|
| SGD-770 | NTS | 11 of 22 | PGT0130 | |

# INSTALLATION DETAILS

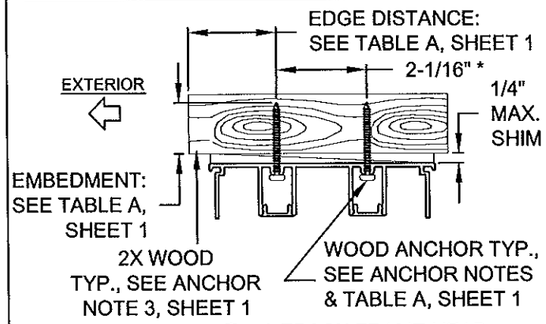


DET Aw 2-TRACK FRAME HEAD WOOD INSTALLATION

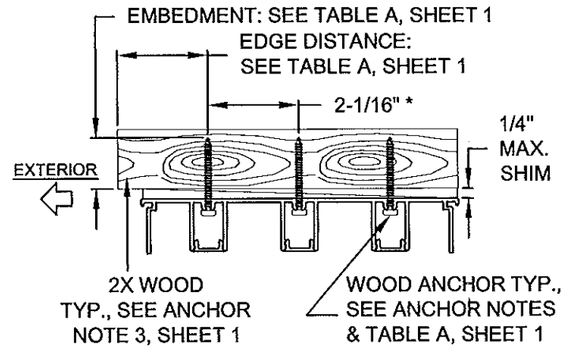


DET Bw 3-TRACK FRAME HEAD WOOD INSTALLATION

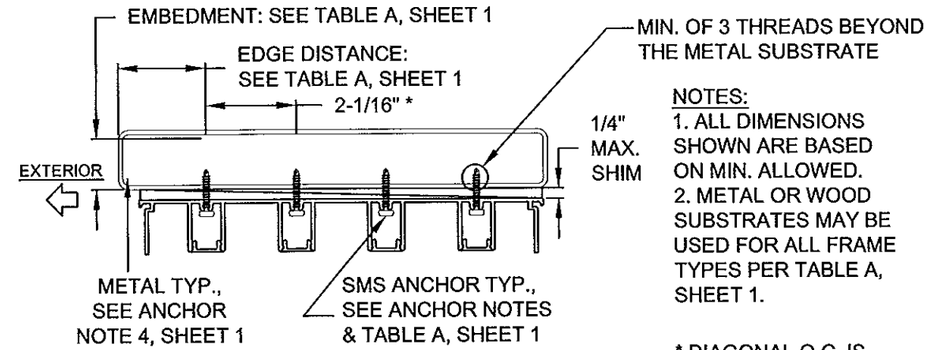


DET Cw 4-TRACK FRAME HEAD METAL INSTALLATION

NOTES:
1. ALL DIMENSIONS SHOWN ARE BASED ON MIN. ALLOWED.
2. METAL OR WOOD SUBSTRATES MAY BE USED FOR ALL FRAME TYPES PER TABLE A, SHEET 1.

* DIAGONAL O.C. IS MIN 4" (HEAD & SILL) OR 6" (JAMB) SEE DETAILS, SHEETS 10 & 11.

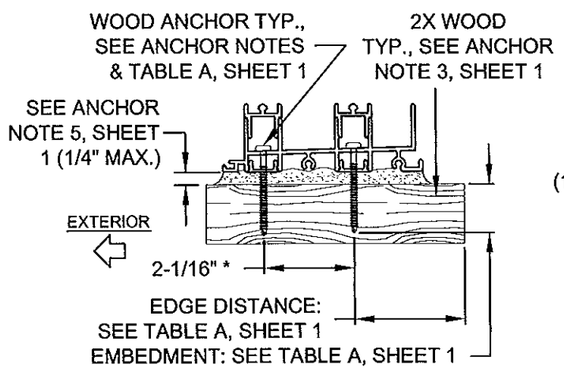


DET Dw 2-TRACK FRAME SILL WOOD INSTALLATION

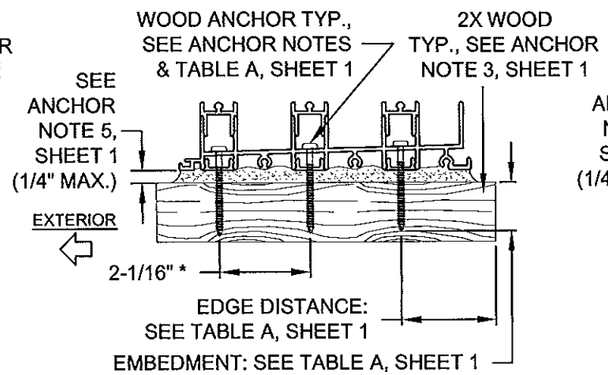


DET Ew 3-TRACK FRAME SILL WOOD INSTALLATION

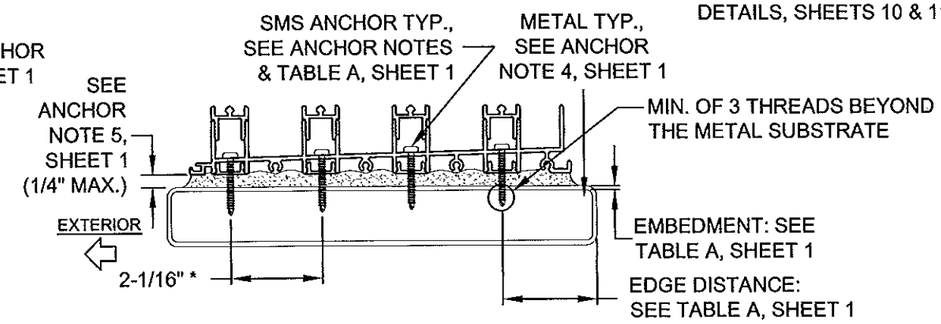


DET Fw 4-TRACK FRAME SILL METAL INSTALLATION

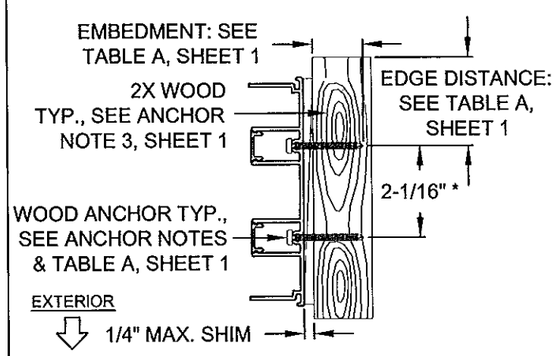


DET Gw 2-TRACK FRAME JAMB WOOD INSTALLATION

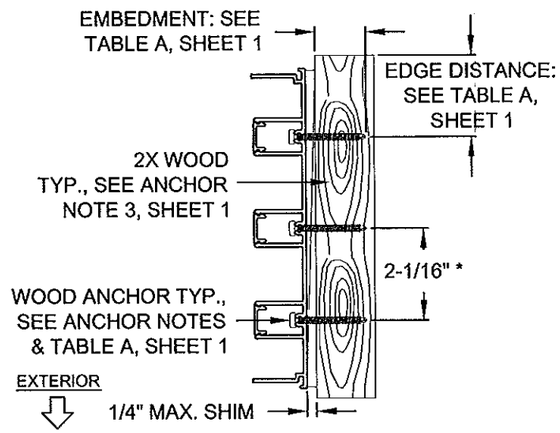


DET Hw 3-TRACK FRAME JAMB WOOD INSTALLATION

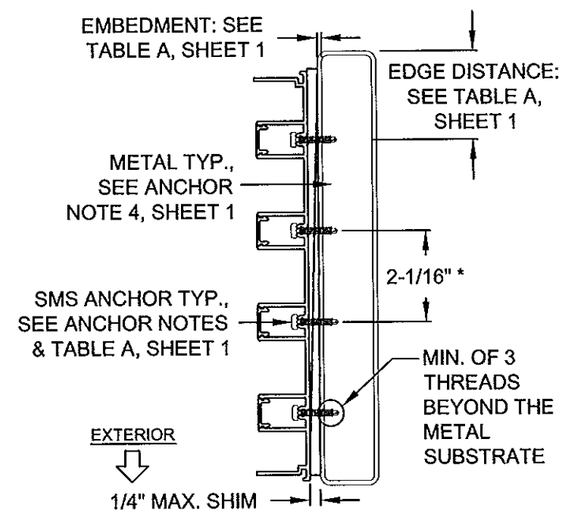


DET Iw 4-TRACK FRAME JAMB METAL INSTALLATION

PRODUCT RENEWED
as complying with the Florida
Building Code
Acceptance No 14-0128.11
Expiration Date 02/17/2020
By
Miami Dade Product Control

ANTHONY LYNN MILLER
LICENSE
No. 58705
STATE OF
FLORIDA
PROFESSIONAL ENGINEER
1/30/15
A. LYNN MILLER, P.E.
P.E.# 58705

| Revsd By: | Date: | Revisions: | |
|---|---|---|---|
| Revsd By: | Date: | Revisions: | |
| Revsd By: | Date: | Revisions: | |
| Drawn By: JR | Date: 10/10/14 | Checked By: | Date: |

1070 TECHNOLOGY DRIVE
N. VENICE, FL 34275
(941)-480-1600
CERT. OF AUTH. #29296

PGT®

Description: ANCHORAGE DETAILS
Title: SERIES 770 ALUM. SGD - LM IMPACT

| Series/Model: | Scale: | Sheet: | Drawing No. | Rev: |
|---|---|---|---|---|
| SGD-770 | NTS | 12 of 22 | PGT0130 | |

# INSTALLATION DETAILS

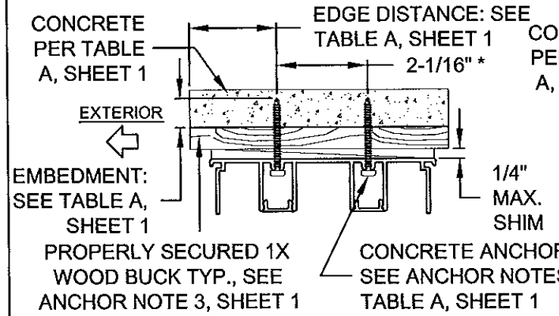


DET Ac 2-TRACK FRAME HEAD CONCRETE INSTALLATION

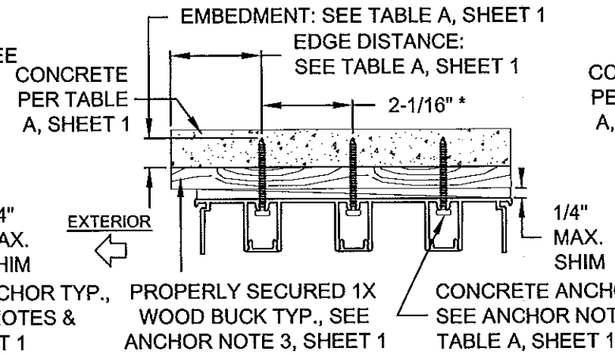


DET Bc 3-TRACK FRAME HEAD CONCRETE INSTALLATION

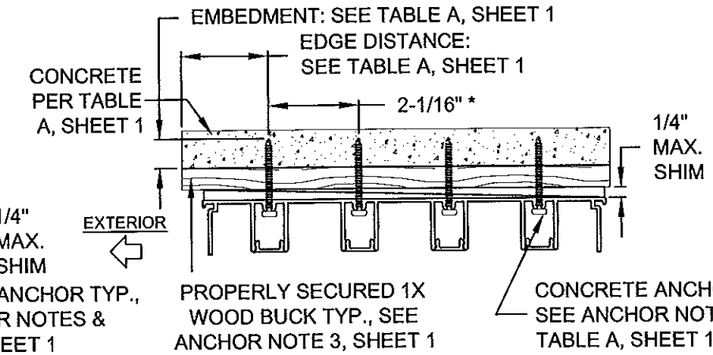


DET Cc 4-TRACK FRAME HEAD CONCRETE INSTALLATION

NOTES:
1. ALL DIMENSIONS SHOWN ARE BASED ON MIN. ALLOWED.

* DIAGONAL O.C. IS MIN 4" (HEAD & SILL) OR 6" (JAMB) SEE DETAILS, SHEETS 0 & 11.

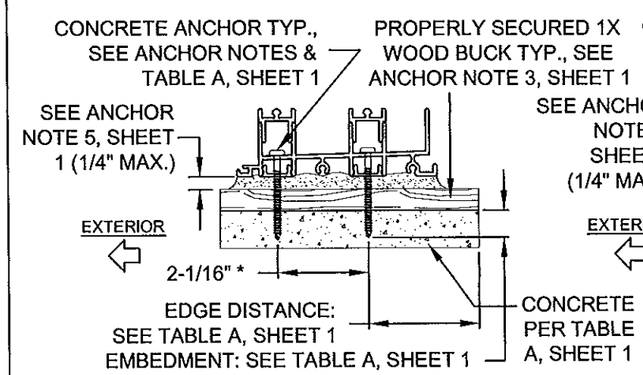


DET Dc 2-TRACK FRAME SILL CONCRETE INSTALLATION

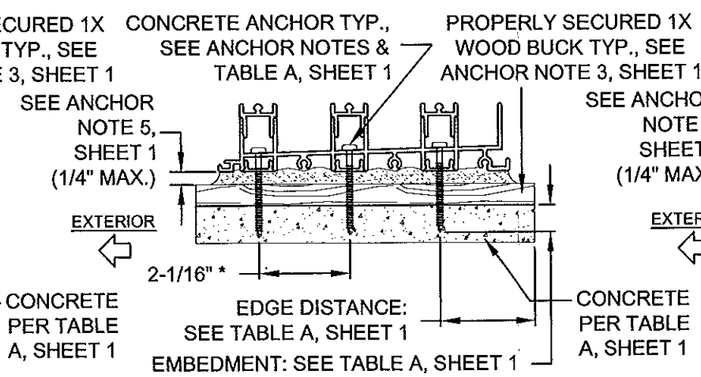


DET Ec 3-TRACK FRAME SILL CONCRETE INSTALLATION

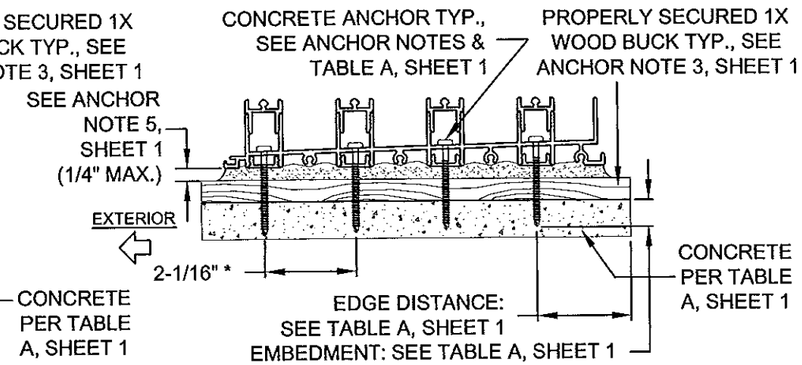


DET Fc 4-TRACK FRAME SILL CONCRETE INSTALLATION

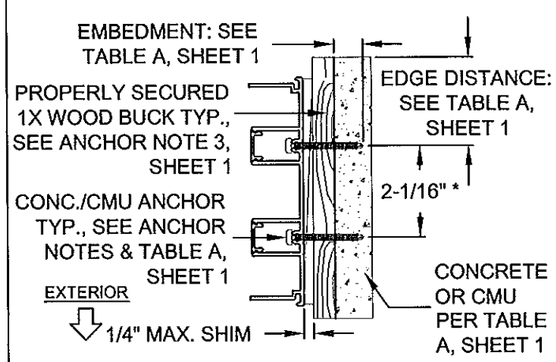


DET Gc 2-TRACK FRAME JAMB CONCRETE/CMU INSTALLATION

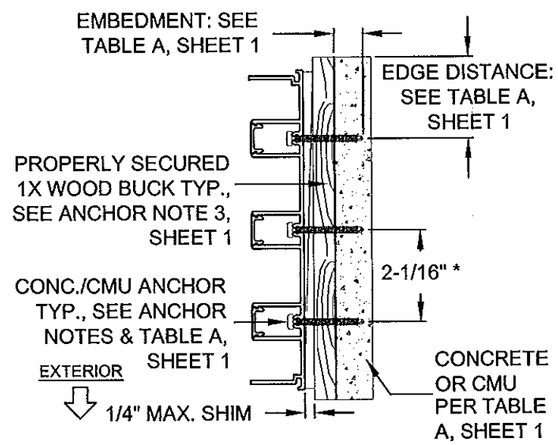


DET Hc 3-TRACK FRAME JAMB CONCRETE/CMU INSTALLATION

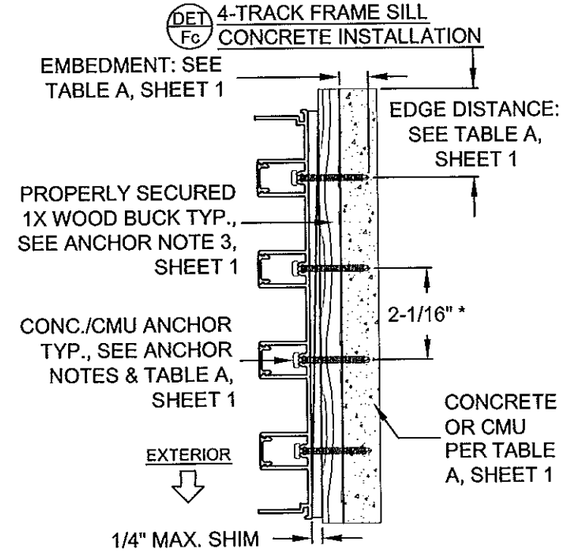


DET Ic 4-TRACK FRAME JAMB CONCRETE/CMU INSTALLATION

PRODUCT RENEWED
as complying with the Florida Building Code
Acceptance No. 14-0128.11
Expiration Date 02/17/2020
By
Miami Dade Product Control

ANTHONY LYNN MILLER
LICENSE
No. 58705
STATE OF FLORIDA
PROFESSIONAL ENGINEER
A. LYNN MILLER, P.E.
P.E.# 58705

| Revsd By: | Date: | Revisions: | |
|---|---|---|---|
| Revsd By: | Date: | Revisions: | |
| Revsd By: | Date: | Revisions: | |
| Drawn By: JR | Date: 10/10/14 | Checked By: | Date: |

1070 TECHNOLOGY DRIVE
N. VENICE, FL 34275
(941)-480-1600
CERT. OF AUTH. #29296

PGT®

Description: ANCHORAGE DETAILS
Title: SERIES 770 ALUM. SGD - LM IMPACT

| Series/Model: | Scale: | Sheet: | Drawing No. | Rev: |
|---|---|---|---|---|
| SGD-770 | NTS | 13 of 22 | PGT0130 | |

# INSTALLATION DETAILS

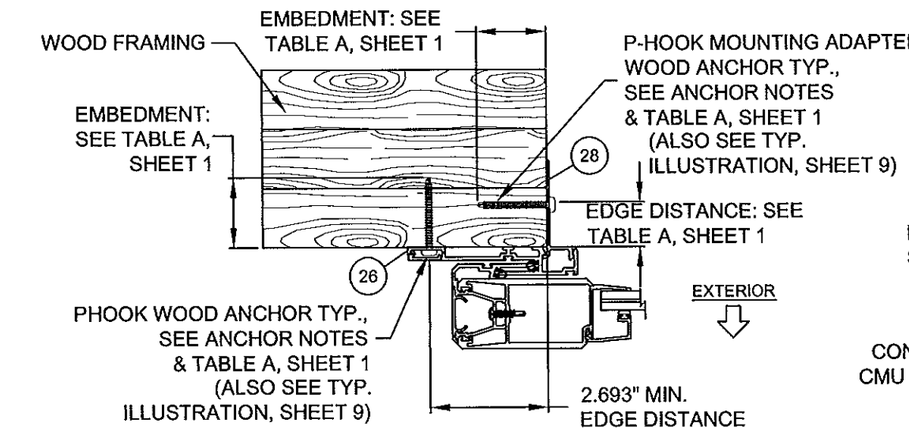


DET Jw P-HOOK FOR USE WITH FLAT SILL RISERS
PARTS #18, #20, #22 OR #24,
WOOD INSTALLATION
(SEE TABLES 1A, 2A & 3A FOR WATER RATINGS)

EXTERIOR MOUNT SHOWN, MAY ALSO BE INSTALLED IN INTERIOR CONDITION

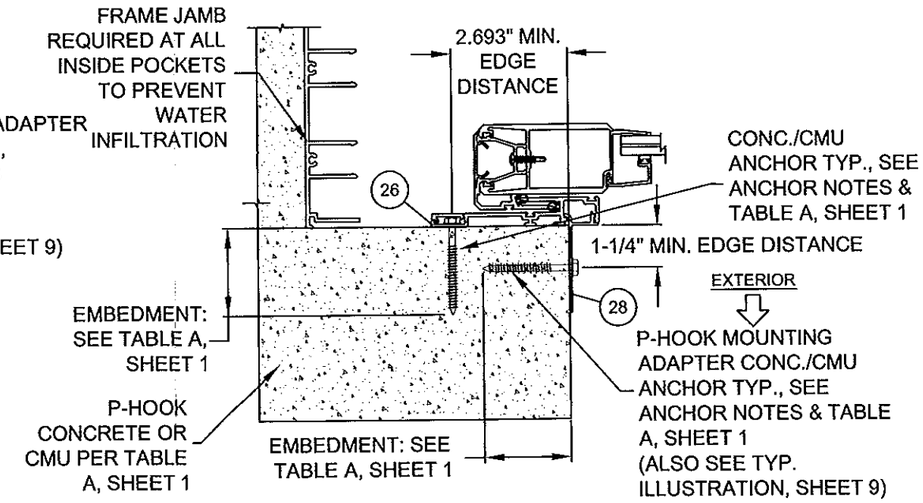


DET Jc P-HOOK FOR USE WITH FLAT SILL RISERS
PARTS #18, #20, #22 OR #24,
CONCRETE/CMU INSTALLATION
(SEE TABLES 1A, 2A & 3A FOR WATER RATINGS)

INTERIOR MOUNT SHOWN, MAY ALSO BE INSTALLED IN EXTERIOR CONDITION

NOTES:
1. ALL DIMENSIONS SHOWN ARE BASED ON MIN. ALLOWED.

2. FIGURES ON THIS SHEET ARE FOR ILLUSTRATIVE PURPOSES ONLY. SEE TABLE A, SHEET 1 FOR ALL APPROVED SUBSTRATES.

3. SEE TABES 1-3, SHEETS 6-8 FOR REQUIRED P-HOOK AND P-HOOK MOUNTING ADAPTER ANCHOR QUANTITIES. ALSO SEE EXAMPLE ON SHEET 9.

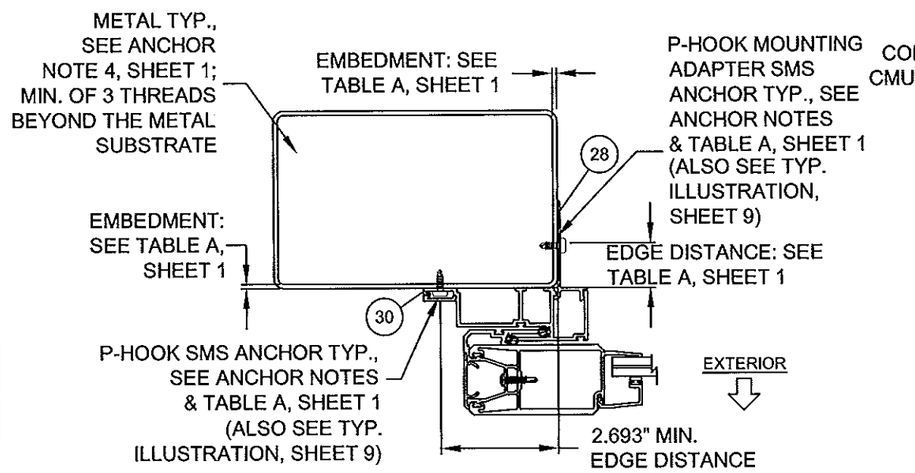


DET Kw P-HOOK FOR USE WITH BOX SILL RISERS
PARTS #19, #21, #23 OR #25,
METAL INSTALLATION
(SEE TABLES 1A, 2A & 3A FOR WATER RATINGS)

EXTERIOR MOUNT ONLY

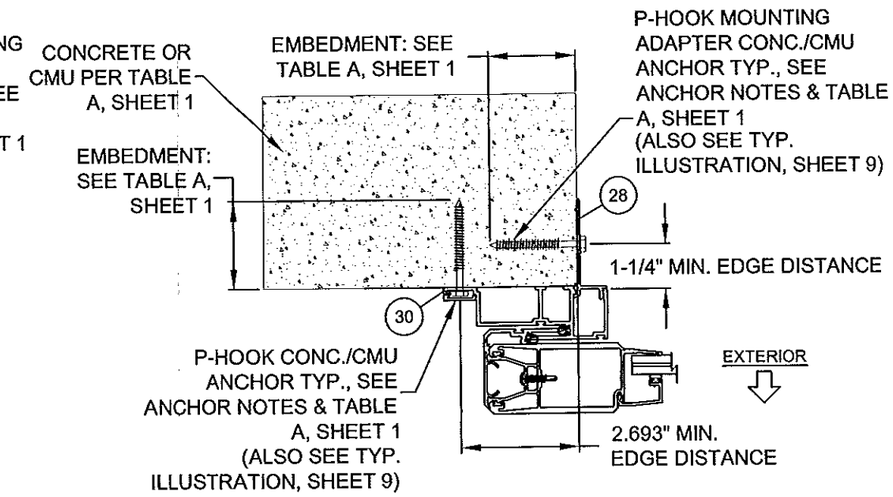


DET Kc P-HOOK FOR USE WITH BOX SILL RISERS
PARTS #19, #21, #23 OR #25,
CONCRETE INSTALLATION
(SEE TABLES 1A, 2A & 3A FOR WATER RATINGS)

EXTERIOR MOUNT ONLY

PRODUCT RENEWED
as complying with the Florida Building Code
Acceptance No 14-0128.11
Expiration Date 02/17/2020
By
Miami Dade Product Control

ANTHONY LYNN MILLER
LICENSE
No. 58705
STATE OF FLORIDA
PROFESSIONAL ENGINEER
11/30/15

A. LYNN MILLER, P.E.
P.E.# 58705

| Revsd By: | Date: | Revisions: | |
|---|---|---|---|
| Revsd By: | Date: | Revisions: | |
| Revsd By: | Date: | Revisions: | |
| Drawn By: JR | Date: 10/10/14 | Checked By: | Date: |

1070 TECHNOLOGY DRIVE
N. VENICE, FL 34275
(941)-480-1600
CERT. OF AUTH. #29296

PGT®

Description: ANCHORAGE DETAILS
Title: SERIES 770 ALUM. SGD - LM IMPACT

| Series/Model: | Scale: | Sheet: | Drawing No. | Rev: |
|---|---|---|---|---|
| SGD-770 | NTS | 14 of 22 | PGT0130 | |

# CONFIG. EXAMPLES

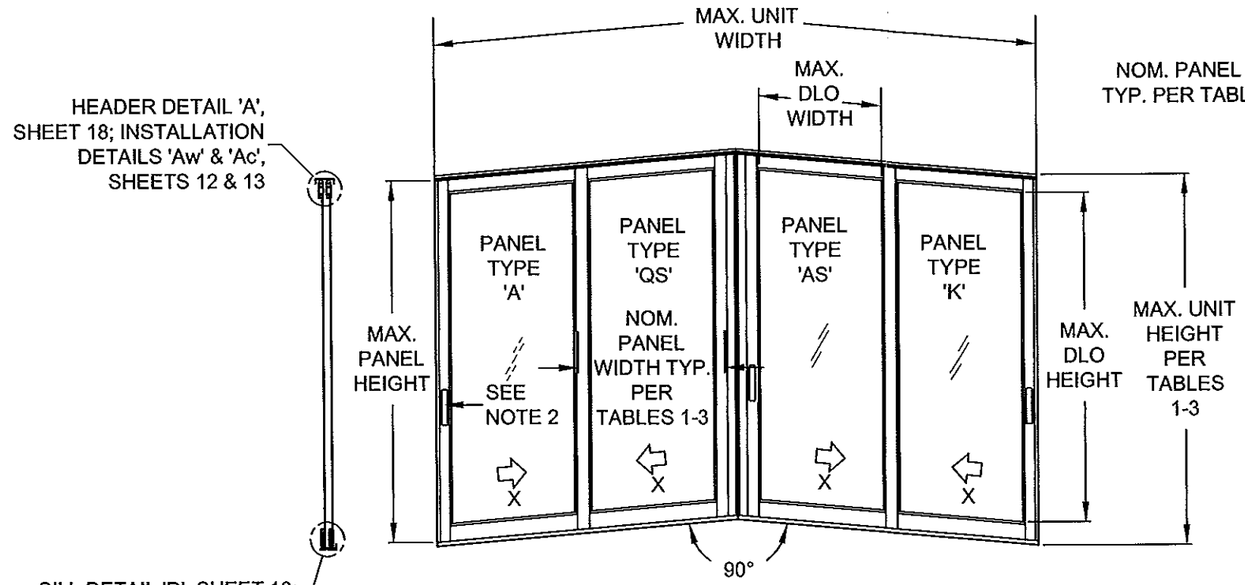


EXAMPLE: 90° INSIDE CORNER, 4 PANELS - XX/XX

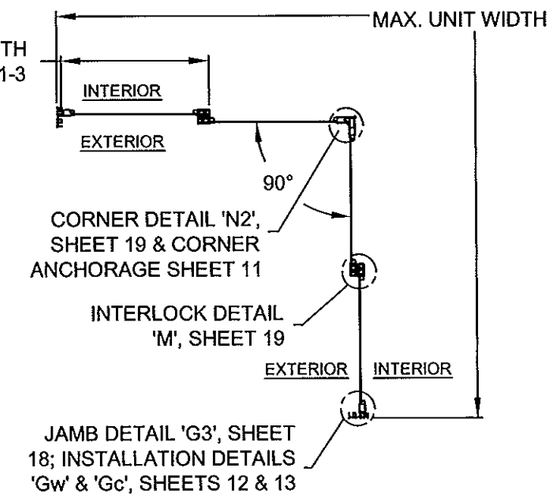


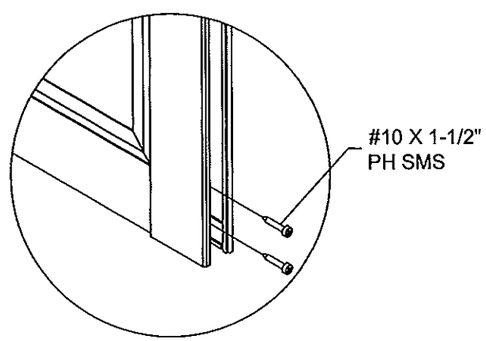


PANEL CORNER DETAIL

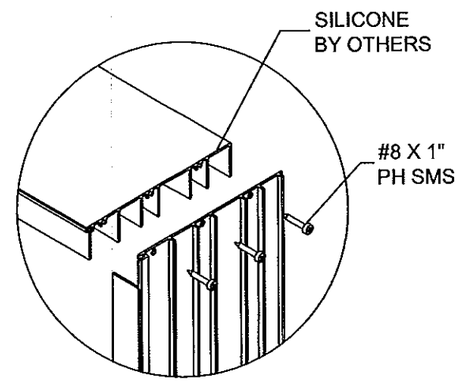


FRAME CORNER DETAIL

DLO WIDTH = NOM. PANEL WIDTH - 7"
DLO HEIGHT = DOOR UNIT HEIGHT - 10.125"
PANEL HEIGHT = DOOR UNIT HEIGHT - 1.866"

NOTES:
1) SEE SHEET 17 FOR INDIVIDUAL PANEL CONFIGURATIONS AS APPLICABLE. SEE DP/ANCHOR TABLES, SHEETS 6-8 FOR MAX. PANEL HEIGHT AND WIDTH. SEE SHEETS 18 & 19 FOR SECTION DETAILS AND SHEETS 12-14 FOR INSTALLATION DETAILS.
2) (1) LOCK (ITEMS 75 & 107-110) AT EACH LOCKSTILE, LOCKING INTO KEEPER (ITEM 103) AT FRAME JAMB OR ASTRAGAL.
3) PLEASE SEE APPLICABLE ASTRAGAL & INTERLOCK COMBINATIONS PER DP/ANCHOR TABLES.

PRODUCT RENEWED
as complying with the Florida Building Code
Acceptance No 14-0128.11
Expiration Date 02/17/2020
By
Miami Dade Product Control

ANTHONY LYNN MILLER
LICENSE
No. 58705
STATE OF FLORIDA
PROFESSIONAL ENGINEER
A. LYNN MILLER, P.E.
P.E.# 58705

| Revsd By: | Date: | Revisions: | |
|---|---|---|---|
| Revsd By: | Date: | Revisions: | |
| Revsd By: | Date: | Revisions: | |
| Drawn By: JR | Date: 10/10/14 | Checked By: | Date: |

1070 TECHNOLOGY DRIVE
N. VENICE, FL 34275
(941)-480-1600
CERT. OF AUTH. #29296

PGT®

Description: ANCHORAGE DETAILS / EXAMPLE ELEVATION
Title: SERIES 770 ALUM. SGD - LM IMPACT

| Series/Model: | Scale: | Sheet: | Drawing No. | Rev: |
|---|---|---|---|---|
| SGD-770 | NTS | 15 of 22 | PGT0130 | |

# CONFIG. EXAMPLES

FOR ALL DETAILS ON THIS SHEET, SEE NOTES ON SHEET 15

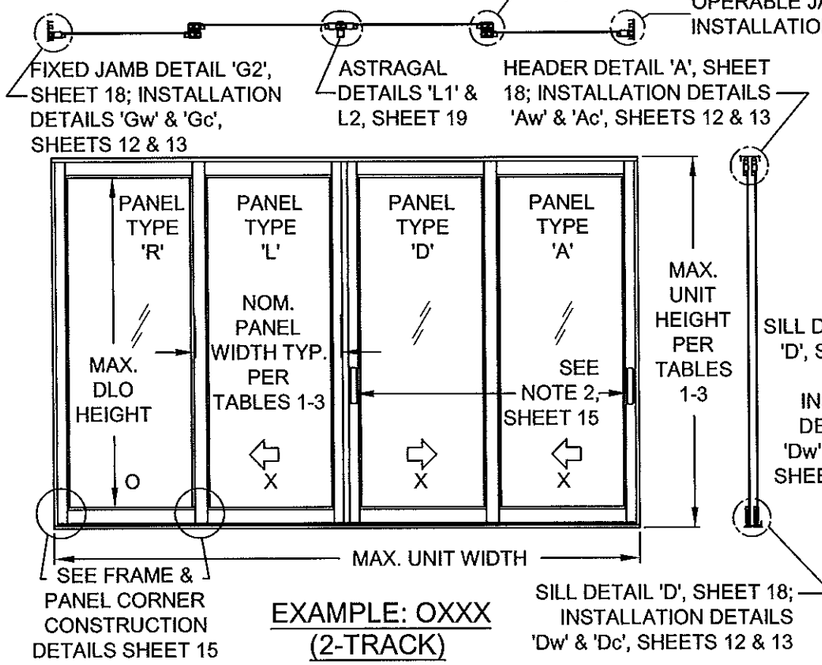


EXAMPLE: OXXX (2-TRACK)

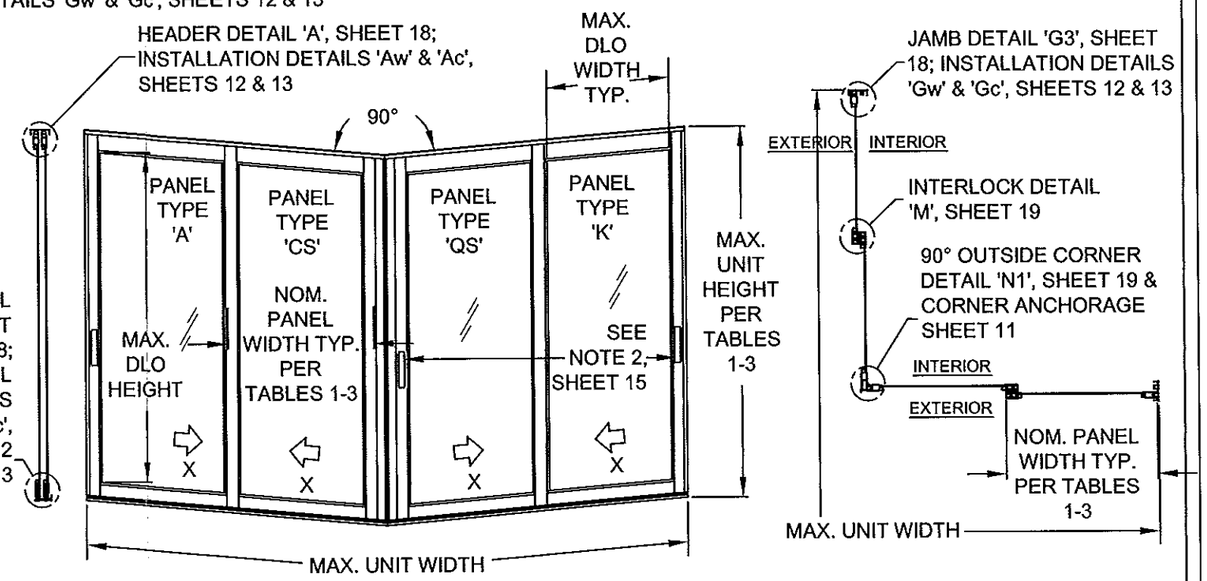


EXAMPLE: 90° OUTSIDE CORNER - XX/XX (2-TRACK)

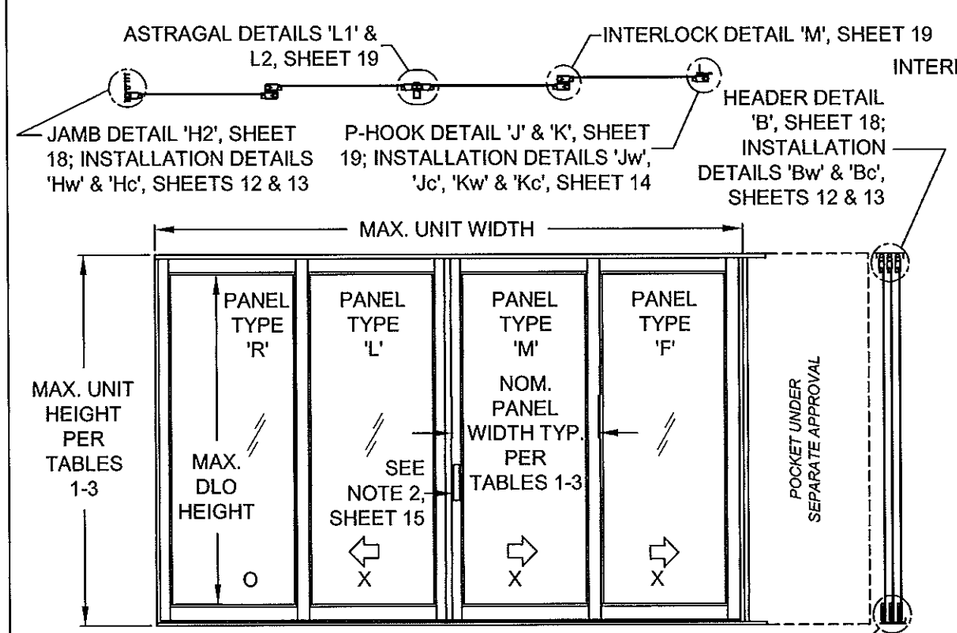


EXAMPLE: OXXXp (3-TRACK, RIGHT POCKET)

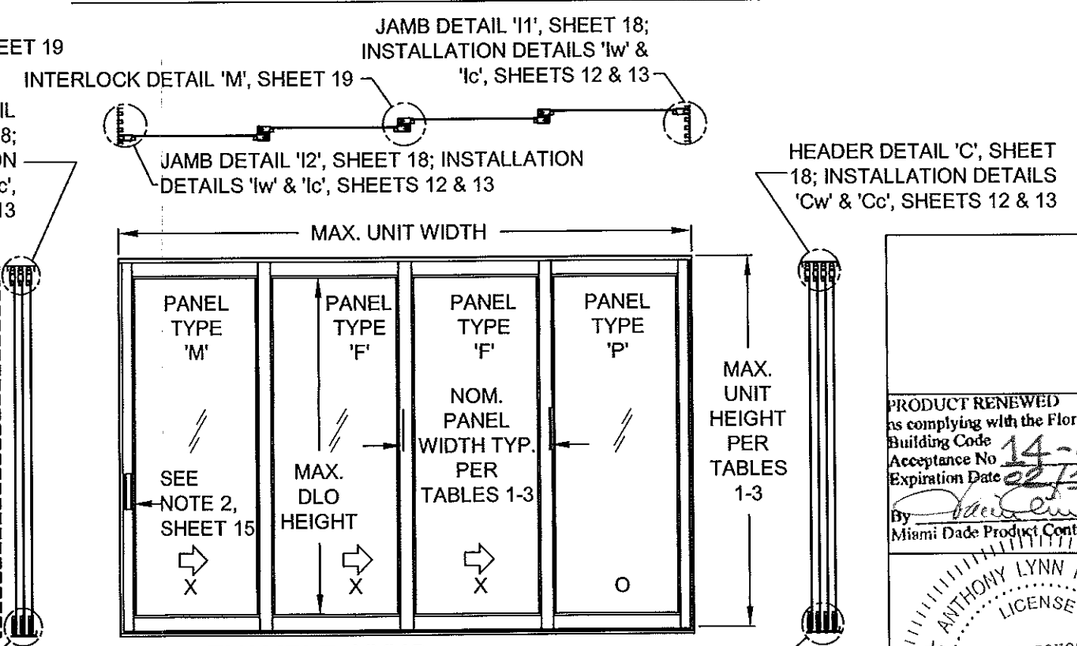


EXAMPLE: XXXO (4-TRACK, BY-PASS)

PRODUCT RENEWED
as complying with the Florida
Building Code
Acceptance No 14-0128.11
Expiration Date 02/17/2020
By
Miami Dade Product Control

ANTHONY LYNN MILLER
LICENSE
No. 58705
11/30/15
STATE OF FLORIDA
PROFESSIONAL ENGINEER
A. LYNN MILLER, P.E.
P.E.# 58705

| Revsd By: | Date: | Revisions: | |
|---|---|---|---|
| Revsd By: | Date: | Revisions: | |
| Revsd By: | Date: | Revisions: | |
| Drawn By: JR | Date: 10/10/14 | Checked By: | Date: |

1070 TECHNOLOGY DRIVE
N. VENICE, FL 34275
(941)-480-1600
CERT. OF AUTH. #29296

PGT®

Description: EXAMPLE ELEVATIONS
Title: SERIES 770 ALUM. SGD - LM IMPACT

| Series/Model: | Scale: | Sheet: | Drawing No. | Rev: |
|---|---|---|---|---|
| SGD-770 | NTS | 16 of 22 | PGT0130 | |

| PANEL'S LEFT STILE TYPE \ PANEL'S RIGHT STILE TYPE | SINGLE INTERLOCK OUT | SINGLE INTERLOCK IN | FIXED STILE | LOCKSTILE W/ HANDLE | ASTRAGAL BOX OUT | ASTRAGAL BOX IN | ASTRAGAL BOX OUT W/ HANDLE | ASTRAGAL BOX IN W/ HANDLE | INT CORNER 90 LOCKSTILE W/ HANDLE #120 | EXT CORNER 90 LOCKSTILE W/ HANDLE #119 | EXT CORNER 90 RECEIVER W/ HANDLE #61 #118 | INT CORNER 90 RECEIVER W/ HANDLE #61 #118 | EXT CORNER 90 RECEIVER #61 #118 | EXT CORNER 135 RECEIVER W/ HANDLE #61 #31 | INT CORNER 135 RECEIVER W/ HANDLE #61 #31 |
|---|---|---|---|---|---|---|---|---|---|---|---|---|---|---|---|
| SINGLE INTERLOCK OUT | | F | PP | K | | | L (BOX OUT) | | TR | TQ | TC | TA | | TV | TW |
| SINGLE INTERLOCK IN | B | E | P | A | | | C (BOX OUT | C (BOX IN) | IC | SQ | SC | SA | | SV | SW |
| FIXED STILE | RR | R | | | S (BOX OUT) | S (BOX IN) | | | | | | FD | FC | FV | FW |
| LOCKSTILE W/ HANDLE | D | M | | | J (BOX OUT) | J (BOX IN) | | | | | | | | | |
| ASTRAGAL BOX OUT W/ HANDLE | LR (BOX OUT) | | | | | | | | | | | | | | |
| ASTRAGAL BOX IN W/ HANDLE | | N (BOX IN) | | | | | | | | | | | | | |
| ASTRAGAL BOX OUT | | | T (BOX OUT) | U (BOX OUT) | | | | | | | | | | | |
| ASTRAGAL BOX IN | | | T (BOX IN) | U (BOX IN) | | | | | | | | | | | |
| INT CORNER 90 LOCKSTILE W/ HANDLE #120 | RT | CI | | | | | | | | | | | | | |
| EXT CORNER 90 LOCKSTILE W/ HANDLE #119 | QT | QS | | | | | | | | | | | | | |
| EXT CORNER 90 RECEIVER W/ HANDLE #61 #118 | CT | CS | | | | | | | | | | | | | |
| INT CORNER 90 RECEIVER W/ HANDLE #61 #118 | AT | AS | DF | | | | | | | | | | | | |
| EXT CORNER 90 RECEIVER #118 #61 | | | CF | | | | | | | | | | | | |
| EXT CORNER 135 RECEIVER W/ HANDLE #31 #61 | VT | VS | VF | | | | | | | | | | | | |
| INT CORNER 135 RECEIVER W/ HANDLE #31 #61 | WT | WS | WF | | | | | | | | | | | | |

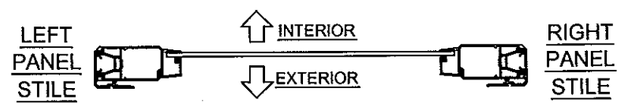


PANEL "E" SHOWN. SEE TABLE FOR OTHER PANEL TYPES AND APPLICABLE STILE/ASTRAGAL REQUIREMENTS.

PANEL NOTES:

1. SEE DP TABLES 1-3, SHEETS 6-8 FOR PANEL SIZES & DESIGN PRESSURE.
2. PANEL TYPES NOT SHOWN OR CROSSED OFF ARE NOT REQUIRED FOR ANY CONFIGURATIONS AND ARE NOT AVAILABLE.
3. 90° ASTRAGALS TO USE HEAVY-DUTY STILES (#61), CORNER RECEIVER (#118) AND EITHER EXTERIOR (#119) OR INTERIOR (#120) CORNER ASTRAGALS.
4. 135° ASTRAGALS TO USE HEAVY-DUTY STILES (#61) AND CORNER ADDON (#31).

## SILL RISERS OPTIONS

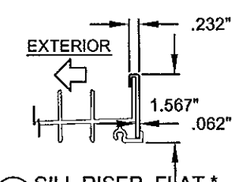


18* SILL RISER, FLAT * FLUSH, 1-1/2"

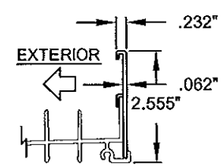


20 SILL RISER, FLAT LOW, 2-1/2"

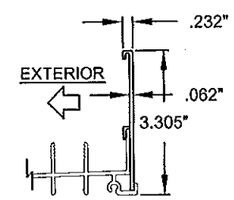


22 SILL RISER, FLAT MEDIUM, 3-1/4"

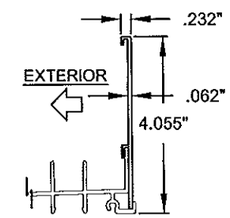


24 SILL RISER, FLAT HIGH, 4"

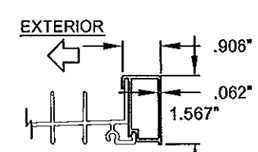


19* SILL RISER, BOX * FLUSH, 1-1/2"

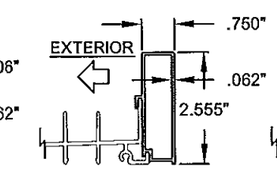


21 SILL RISER, BOX LOW, 2-1/2"

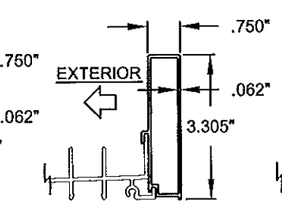


23 SILL RISER, BOX MEDIUM, 3-1/4"

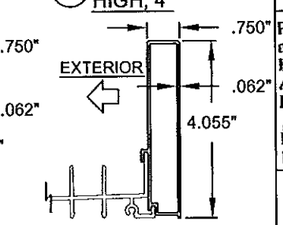


25 SILL RISER, BOX HIGH, 4"

* NOT VALID FOR WATER INFILTRATION RESISTANCE REQUIREMENTS, SEE SHEETS 6-8

PRODUCT RENEWED
as complying with the Florida
Building Code
Acceptance No 14-0128.11
Expiration Date 02/17/2020
By
Miami Dade Product Control

ANTHONY LYNN MILLER
LICENSE
No. 58705
1/30/15
STATE OF FLORIDA
PROFESSIONAL ENGINEER
A. LYNN MILLER, P.E.
P.E.# 58705

| Revsd By: | Date: | Revisions: | |
|---|---|---|---|
| Revsd By: | Date: | Revisions: | |
| Revsd By: | Date: | Revisions: | |
| Drawn By: JR | Date: 10/10/14 | Checked By: | Date: |

1070 TECHNOLOGY DRIVE
N. VENICE, FL 34275
(941)-480-1600
CERT. OF AUTH. #29296

PGT®

Description: PANEL TYPES
Title: SERIES 770 ALUM. SGD - LM IMPACT

| Series/Model: | Scale: | Sheet: | Drawing No. | Rev: |
|---|---|---|---|---|
| SGD-770 | NTS | 17 of 22 | PGT0130 | |

# ASSEMBLY DETAILS

(SEE SHEETS 12-14 FOR FOR INSTALLATION DETAILS)

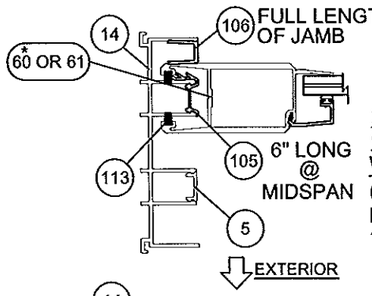


DET G1 — 2-TRACK JAMB CLIP #105 W/ RETAINER #106 (SHOWN WITH FIXED PANEL TO THE INTERIOR)

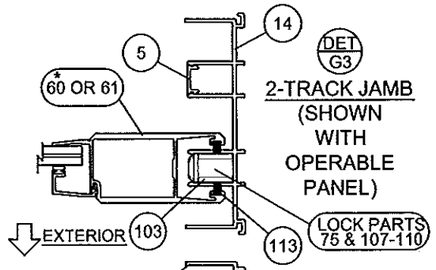


DET G3 — 2-TRACK JAMB (SHOWN WITH OPERABLE PANEL)

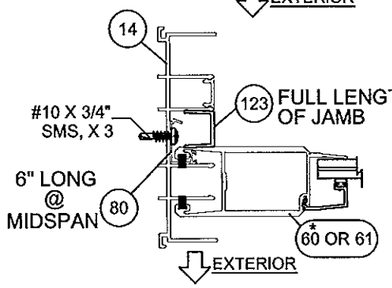


DET G2 — 2-TRACK JAMB CLIP #80 OR #105 W/ RETAINER #123 (SHOWN WITH FIXED PANEL TO THE EXTERIOR)

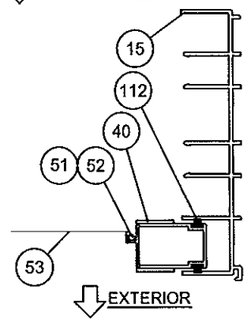


DET G4 — 2-TRACK JAMB W/ SCREEN

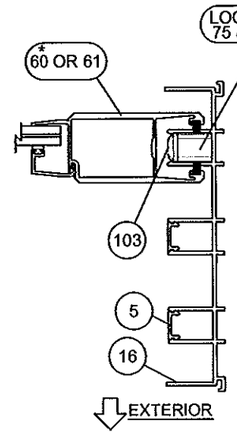


DET H1 — 3-TRACK JAMB (SHOWN WITH OPERABLE PANEL)

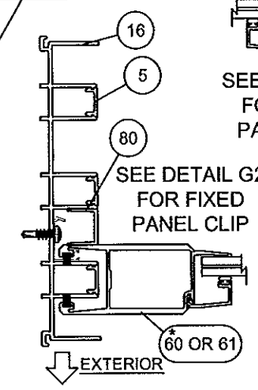


DET H2 — 3-TRACK JAMB (SHOWN WITH FIXED PANEL TO THE EXTERIOR)

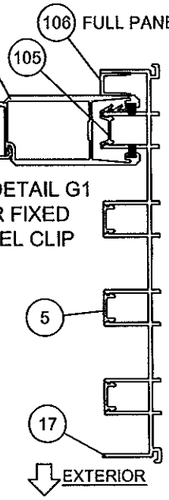


DET I1 — 4-TRACK JAMB (SHOWN WITH FIXED PANEL TO THE INTERIOR)

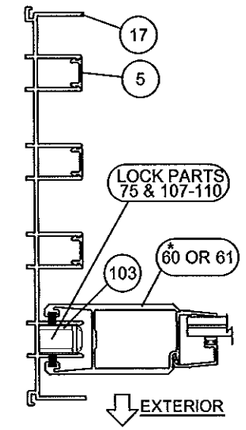


DET I2 — 4-TRACK JAMB (SHOWN WITH OPERABLE PANEL)

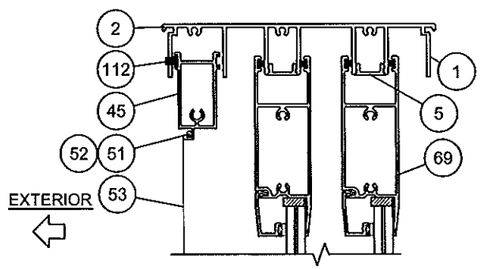


SHOWN WITH OPT. SCREEN TRACK

DET A — 2-TRACK W/SCREEN FRAME HEAD

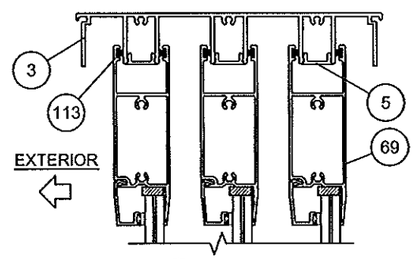


DET B — 3-TRACK FRAME HEAD

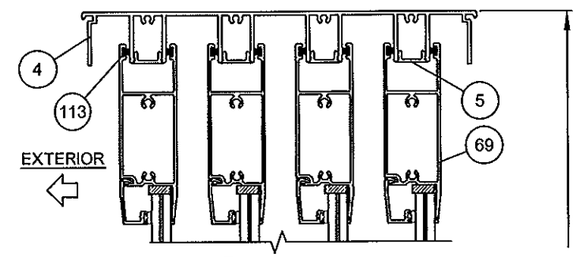


DET C — 4-TRACK FRAME HEAD

MAX. UNIT HEIGHT PER TABLES 1-3

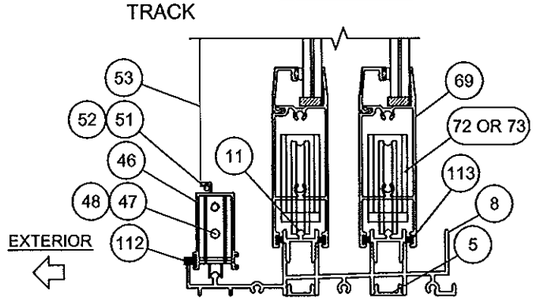


DET D — 2-TRACK W/SCREEN FRAME SILL

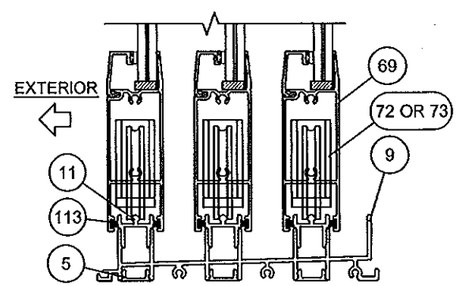


DET E — 3-TRACK FRAME SILL

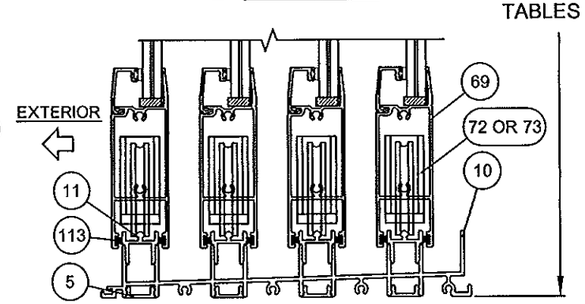


DET F — 4-TRACK FRAME SILL

* ITEM 61 SHOWN, ITEM 60 ALSO APPLICABLE, SEE TABLES 1-3, SHEETS 6-8 FOR DP (PSF) ASSOCIATED WITH STILE.

PRODUCT RENEWED as complying with the Florida Building Code Acceptance No 14-0128.11 Expiration Date 02/17/2020 By Miami Dade Product Control

ANTHONY LYNN MILLER LICENSE No. 58705 STATE OF FLORIDA PROFESSIONAL ENGINEER 1/3/15

A. LYNN MILLER, P.E. P.E.# 58705

| Revsd By: | Date: | Revisions: | |
|---|---|---|---|
| Revsd By: | Date: | Revisions: | |
| Revsd By: | Date: | Revisions: | |
| Drawn By: JR | Date: 10/10/14 | Checked By: | Date: |

1070 TECHNOLOGY DRIVE
N. VENICE, FL 34275
(941)-480-1600
CERT. OF AUTH. #29296

PGT®

Description: VERTICAL SECTION DETAILS

Title: SERIES 770 ALUM. SGD - LM IMPACT

| Series/Model: | Scale: | Sheet: | Drawing No. | Rev: |
|---|---|---|---|---|
| SGD-770 | NTS | 18 of 22 | PGT0130 | |

# ASSEMBLY DETAILS

(SEE SHEETS 12-14 FOR FOR INSTALLATION DETAILS)

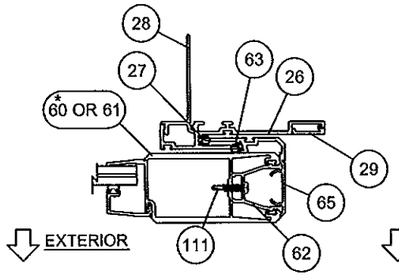


DET J P-HOOK FOR FLAT SILLS (EXT. OR INT. MOUNT)

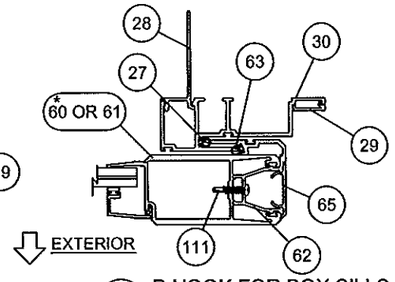


DET K P-HOOK FOR BOX SILLS EXT. MOUNT ONLY

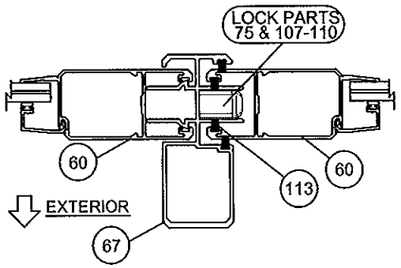


DET L1 STANDARD ASTRAGAL #67 WITH STANDARD STILES #60

EXTERIOR BOX ASTRAGAL SHOWN (BOX-OUT) MAY ALSO BE INSTALLED TOWARDS INTERIOR (BOX-IN)

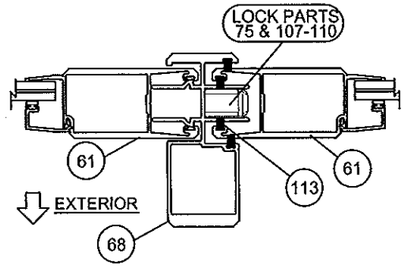


DET L2 HEAVY-DUTY ASTRAGAL #68 WITH HEAVY-DUTY STILES #61

EXTERIOR BOX ASTRAGAL SHOWN (BOX-OUT) MAY ALSO BE INSTALLED TOWARDS INTERIOR (BOX-IN)

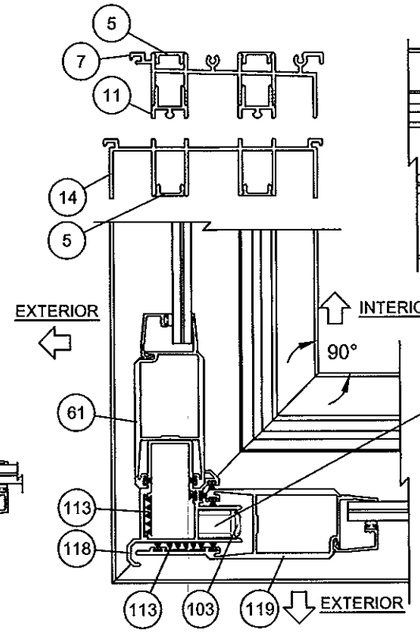


DET N1 90° OUTSIDE CORNER 2-TRACK SHOWN

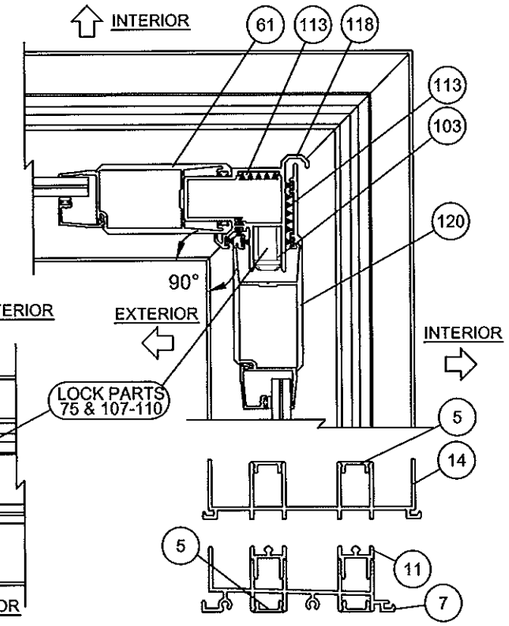


DET N2 90° INSIDE CORNER 2-TRACK SHOWN

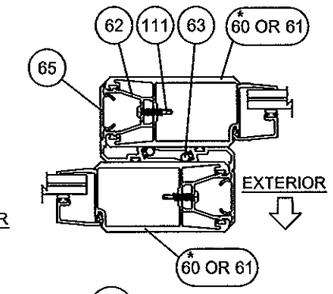


DET M INTERLOCK

* ITEM #61 (HEAVY-DUTY STILE) SHOWN, ITEM #60 (STANDARD STILE) ALSO APPLICABLE, SEE TABLES 1-3, SHEETS 6-8 FOR DP (PSF) ASSOCIATED WITH STILES.

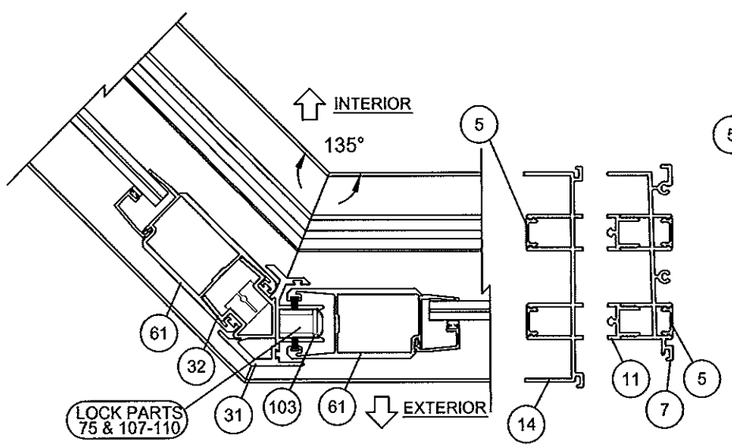


DET O1 135° OUTSIDE CORNER 2-TRACK SHOWN

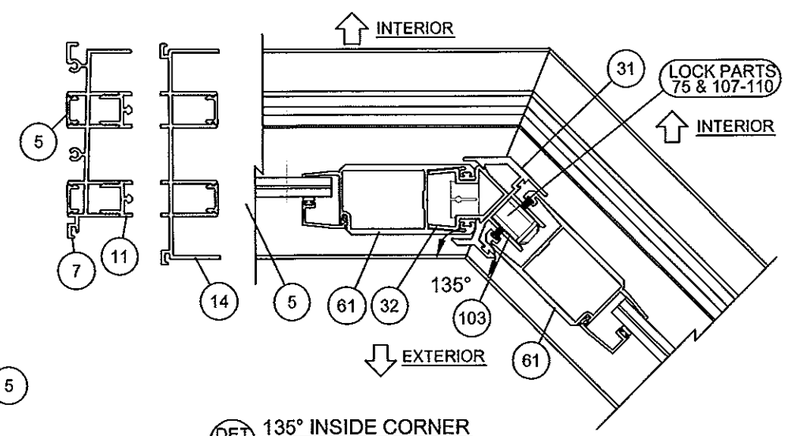


DET O2 135° INSIDE CORNER 2-TRACK SHOWN

PRODUCT RENEWED
as complying with the Florida
Building Code
Acceptance No 14-0128.11
Expiration Date 02/17/2020
By
Miami Dade Product Control

ANTHONY LYNN MILLER
LICENSE
No. 58705
STATE OF FLORIDA
PROFESSIONAL ENGINEER
A. LYNN MILLER, P.E.
P.E.# 58705

| Revsd By: | Date: | Revisions: | |
|---|---|---|---|
| Revsd By: | Date: | Revisions: | |
| Revsd By: | Date: | Revisions: | |
| Drawn By: JR | Date: 10/10/14 | Checked By: | Date: |

1070 TECHNOLOGY DRIVE
N. VENICE, FL 34275
(941)-480-1600
CERT. OF AUTH. #29296

PGT®

Description: HORIZONTAL SECTION DETAILS, CORNERS

Title: SERIES 770 ALUM. SGD - LM IMPACT

| Series/Model: | Scale: | Sheet: | Drawing No. | Rev: |
|---|---|---|---|---|
| SGD-770 | NTS | 19 of 22 | PGT0130 | |

| Item | PGT Dwg. # | PGT # | Description |
|---|---|---|---|
| 1 | 17306 | 617306 | 2-TRACK HEAD |
| 2 | 17303 | 617303 | 2-TRACK HEAD WITH SCREEN RAIL |
| 3 | 17309 | 617309 | 3-TRACK HEAD |
| 4 | 17312 | 617312 | 4-TRACK HEAD |
| 5 | 17314 | 617314 | FRAME SCREW COVER |
| 6 | 17317 | 617317 | FRAME HEAD/JAMB ADD-ON |
| 7 | 17304 | 617304 | 2-TRACK SILL |
| 8 | 17301 | 617301 | 2-TRACK SILL WITH SCREEN RAIL |
| 9 | 17307 | 617307 | 3-TRACK SILL |
| 10 | 17310 | 617310 | 4-TRACK SILL |
| 11 | 17313 | 617313 | FRAME SILL TRACK INSERT |
| 12 | 17315 | 617315 | FRAME SILL SCREEN ADD-ON (SEE NOTE 3) |
| 13 | 17316 | 617316 | FRAME SILL SCREEN END ADD-ON (SEE NOTE 3) |
| 14 | 17305 | 617305 | 2-TRACK JAMB |
| 15 | 17302 | 617302 | 2-TRACK JAMB WITH SCREEN RAIL |
| 16 | 17308 | 617308 | 3-TRACK JAMB |
| 17 | 17311 | 617311 | 4-TRACK JAMB |
| 18 | 17322 | 617322 | SILL RISER - FLAT, FLUSH, 1-1/2" |
| 19 | 17319 | 617319 | SILL RISER - BOX, FLUSH, 1-1/2" |
| 20 | 17321 | 617321 | SILL RISER - FLAT, LOW, 2-1/2" |
| 21 | 17318 | 617318 | SILL RISER - BOX, LOW, 2-1/2" |
| 22 | 17355 | 617355 | SILL RISER - FLAT, MEDIUM, 3-1/4" |
| 23 | 17354 | 617354 | SILL RISER - BOX, MEDIUM, 3-1/4" |
| 24 | 17323 | 617323 | SILL RISER - FLAT, HIGH, 4" |
| 25 | 17320 | 617320 | SILL RISER - BOX, HIGH, 4" |
| 26 | 17333 | 617333 | POCKET P-HOOK |
| 27 | 7070 | 67070 | NEOPRENE BULB WSTP FOR P-HOOK |
| 28 | 17334 | 617334 | POCKET P-HOOK MOUNT |
| 29 | 17335 | 617335 | P-HOOK COVER |
| 30 | 17348 | 617348 | POCKET P-HOOK FOR BOX RISER |
| 31 | 17378 | 617378 | 135 CORNER |
| 32 | 17376 | 617376 | 135 FIXED MOUNT |
| ITEMS 40-53 ARE SCREEN PARTS: | | | |
| 40 | 4319 | 612258 | SCREEN SIDE RAIL - LOCKSTILE |
| 41 | | 7LOCKWGSK | SCREEN LOCKSET |
| 42 | | 41818 | SCREEN KEEPER SPACER SET |
| 43 | 8152 | 68152 | SCREEN INTERLOCK ADAPTER |
| 44 | 4428 | 64428 | SCREEN DOUBLE INTERLOCK |
| 45 | 4317 | 612256 | SCREEN TOP RAIL |
| 46 | 4318 | 612257 | SCREEN BOTTOM RAIL |
| 47 | 668 | 7SRAZ | STANDARD ROLLER |
| 48 | 668 | 7SRAX | STANDARD ROLLER - ST. STL. |
| 49 | 4344 | 64344 | SCREEN ASTRAGAL |
| 50 | 17349 | 617349 | OXO SCREEN ASTRAGAL ADAPTER |
| 51 | 1692 | 61692 | SCREEN SPLINE - .165" |
| 52 | 1694 | 61694 | SCREEN SPLINE - .150" |
| 53 | | 61816C20 | SCREEN CLOTH |
| 54 | 1725 | | 1/2" X 4" X 1/16" SET. BLOCK, NEOPRENE 85 +/-5 |
| 55 | 1726 | | 1" X 4" X 1/16" SET. BLOCK, NEOPRENE 85 +/-5 |

| Item | PGT Dwg. # | PGT # | Description |
|---|---|---|---|
| 56 | | | QUANEX/TRUSEAL DURASEAL SPACER (COMPOSITE SEALANT/DESSICANT) |
| 60 | 17325 | 617325 | PANEL STILE |
| 61 | 17326 | 617326 | PANEL STILE (HEAVY DUTY) |
| 62 | 17327 | 617327 | INTERLOCK ADAPTOR |
| 63 | 1225 | 6TP248 | VINYL BULB WSTP. - THIN (INSIDE INTERLOCK) |
| 64 | 1729 | 71729 | SILL END WEATHERSTRIP PAD |
| 65 | 17328 | 617328 | INTERLOCK SCREW COVER |
| 67 | 17329 | 617329 | ASTRAGAL |
| 68 | 17339 | 617339 | HEAVY DUTY ASTRAGAL |
| 69 | 17324 | 617324 | TOP & BOTTOM RAIL |
| 70 | 17350 | 417350 | WEATHERSTRIP EXTENSION (INJECTION MOLDED) |
| 71 | 1695 | 71695 | 1-1/2" X 1" X 3/4" HIGH FIN SEAL DUST PLUGS |
| 72 | 8153 | 78153X | TANDEM ST. STL. ROLLER ASSY. |
| 73 | 8153 | 78153N | TANDEM NYLON ROLLER ASSY. |
| 74 | | SILICONE | DOW-899, DOW-995 OR GE-7700 |
| 75 | 8185 | 78185X | GEMINI MORTICE 3-PLY DUAL LOCK W/LONG TRIM PLATE |
| 76 | | 71032X1FPFX | #10-32 X 1" FL. SS SCREW W/ TYPE "F" TIP |
| 77 | | 7103239 | 10-32 STEEL ZINC U-NUT |
| 79 | 17357 | 617357 | 1" IG BEAD |
| 80 | 17359 | 617359 | 7/16" BEAD / FIXED PANEL CLIP |
| 81 | 17360 | 617360 | 9/16" BEAD |
| 82 | 1224 | 6TP247K | VINYL BULB WEATHERSTRIP |
| 83 | 61745 | 1745 | LOWE INC, 1/2" X 1/16" SGL. SIDE ADH. TAPE, POLYETH. |
| 100 | 8052 | 48052 | ROLLER ADJ. HOLE PLUG |
| 101 | | 72087 | JAMB BUMPER |
| 102 | 1696 | 71696 | DUST PLUG |
| 103 | 8186 | 78186X | 1" KEEPER |
| 104 | 653 | 7SDKEEP | SCREEN LOCK KEEPER |
| 105 | 17344 | 617344 | FIXED PANEL CLIP - 6" LONG |
| 106 | 17352 | 617352 | FIXED PANEL RETAINER - 9/16" |
| 107 | 1739 | 71739 | HANDLE KIT - INTERIOR RAISED WITH THUMB TURN |
| 108 | 1740 | 71740 | HANDLE KIT - RAISED EXTERIOR HANDLE |
| 109 | 1731 | 78162SN | HANDLE KIT - RECESSED INTERIOR WITH THUMB TURN |
| 110 | 1732 | 78178 | HANDLE KIT - RECESSED EXTERIOR PULL |
| 111 | | 710X34PPSDAX | #10 X 3/4" PH. PN. TEK - S.S. |
| 112 | 1235 | 67S16 | WSTP, .270 X .170 - FIN SEAL |
| 113 | 1712 | 64066 | .187" X .230" FINSEAL |
| 114 | | 710X115PPX | #10 X 1-1/2" |
| 115 | | 710XPPT | #10 X 1" |
| 116 | | 720X1X | #14-20 X 1" S.S. |
| 117 | | 720X112X | #14-20 X 1-1/2" S.S. |
| 118 | 17336 | 617336 | 90 DEGREE CORNER RECEIVER |
| 119 | 17337 | 617337 | 90 DEGREE OUTSIDE CORNER ASTRAGAL |
| 120 | 17338 | 6117338 | 90 DEGREE INSIDE CORNER ASTRAGAL |
| 123 | 17352 | 617352 | FIXED PANEL RETAINER, 7/8" |

NOTES:
1) ALL ALUMINUM = 6063-T6

2) ITEMS # 33-39, 57-59, 66, 78, 84-99, 121 & 122 ARE NOT USED AND ARE NOT PART OF THIS APPROVAL.

3) USE OF #12 OR #13 REQUIRES MIN. #10 SMS OR 3/16" MASONRY ANCHORS @ 24" MAX. O.C.

PRODUCT RENEWED
as complying with the Florida
Building Code
Acceptance No 14-0128.11
Expiration Date 02/17/2020
By
Miami Dade Product Control

ANTHONY LYNN MILLER
LICENSE
No. 58705
1/30/15
STATE OF FLORIDA
PROFESSIONAL ENGINEER
A. LYNN MILLER, P.E.
P.E.# 58705

NOTES:
1) ALL ALUMINUM = 6063-T6
2) ITEMS # 33-39, 57-59, 66, 78, 84-99, 121 & 122 ARE NOT USED AND ARE NOT PART OF THIS APPROVAL.

| Revsd By: | Date: | Revisions: | |
|---|---|---|---|
| Revsd By: | Date: | Revisions: | |
| Revsd By: | Date: | Revisions: | |
| Drawn By: JR | Date: 10/10/14 | Checked By: | Date: |

1070 TECHNOLOGY DRIVE
N. VENICE, FL 34275
(941)-480-1600
CERT. OF AUTH. #29296

Description: PARTS LIST
Title: SERIES 770 ALUM. SGD - LM IMPACT

| Series/Model: | Scale: | Sheet: | Drawing No. | Rev: |
|---|---|---|---|---|
| SGD-770 | NTS | 20 of 22 | PGT0130 | |

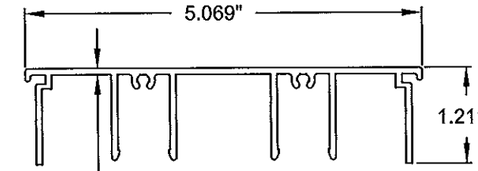


1 2-TRACK HEAD
(6063-T6 AL)

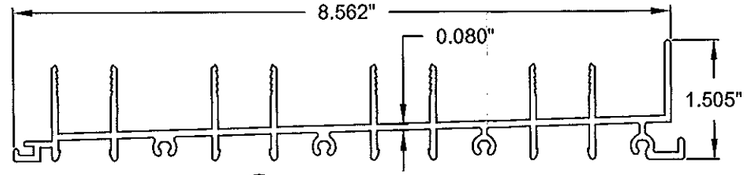


10 4-TRACK SILL
(6063-T6 AL)

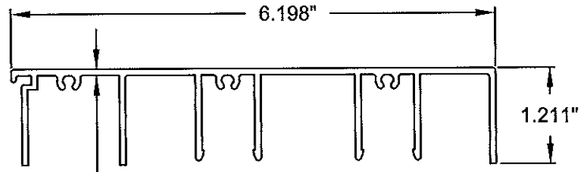


2 2-TRACK HEAD W/ SCREEN TRACK
(6063-T6 AL)

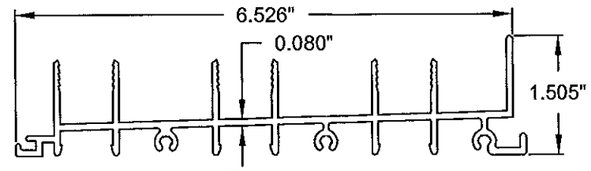


9 3-TRACK SILL
(6063-T6 AL)

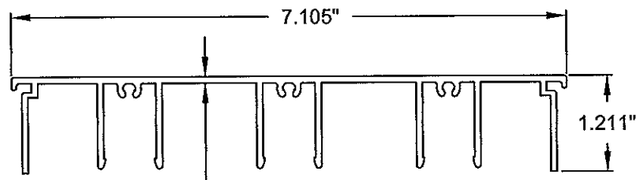


3 3-TRACK HEAD
(6063-T6 AL)

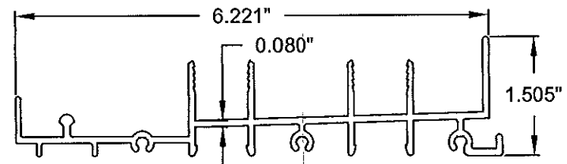


8 2-TRACK SILL W/ SCREEN TRACK
(6063-T6 AL)

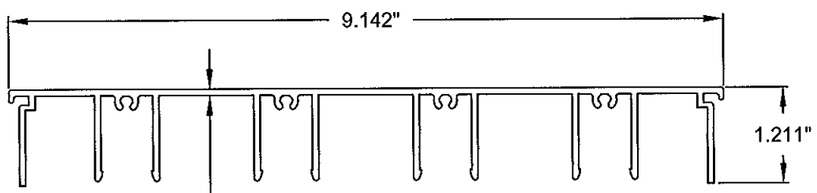


4 4-TRACK HEAD
(6063-T6 AL)

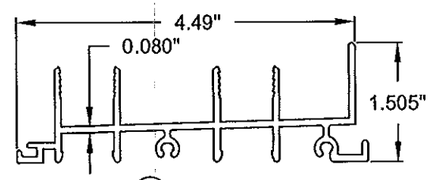


7 2-TRACK SILL
(6063-T6 AL)

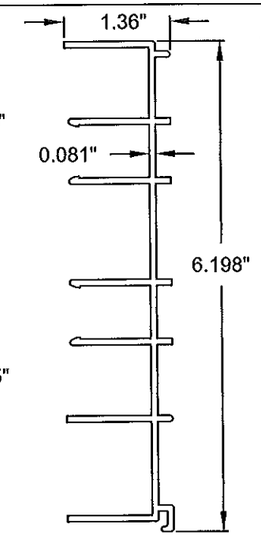


15 2-TRACK JAMB W/ SCREEN TRACK
(6063-T6 AL)

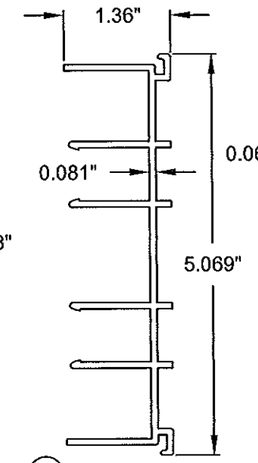


14 2-TRACK JAMB
(6063-T6 AL)

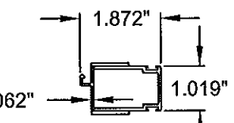


40 SCREEN STILE
(6063-T6 AL)

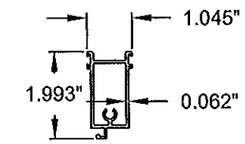


45 SCREEN TOP RAIL
(6063-T6 AL)

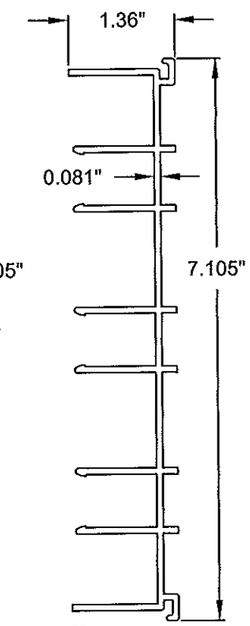


16 3-TRACK JAMB
(6063-T6 AL)

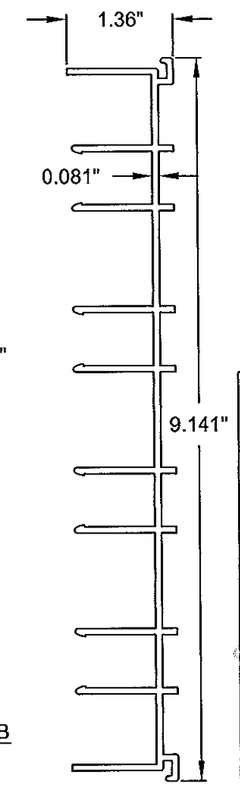


17 4-TRACK JAMB
(6063-T6 AL)

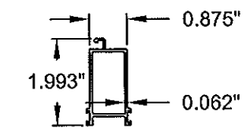


46 SCREEN BOTTOM RAIL
(6063-T6 AL)

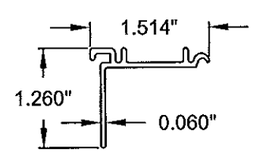


6 FRAME HEAD/JAMB SCREEN ADD-ON
(6063-T6 AL)

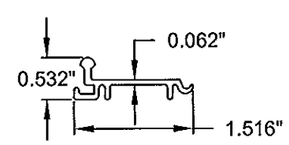


12 FRAME SILL SCREEN ADD-ON
(6063-T6 AL)

REQUIRES MIN. #10 SMS OR 3/16" MASONRY ANCHORS @ 24" MAX. O.C.

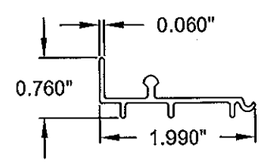


13 FRAME SILL SCREEN END ADD-ON
(6063-T6 AL)

REQUIRES MIN. #10 SMS OR 3/16" MASONRY ANCHORS @ 24" MAX. O.C.

SEE SHEET 17 FOR SILL RISERS.

PRODUCT RENEWED
as complying with the Florida
Building Code
Acceptance No 14-0128.11
Expiration Date 02/17/2020
By
Miami Dade Product Control

ANTHONY LYNN MILLER
LICENSE
No. 58705
1/30/15
STATE OF FLORIDA
PROFESSIONAL ENGINEER
A. LYNN MILLER, P.E.
P.E.# 58705

| Revsd By: | Date: | Revisions: | |
|---|---|---|---|
| Revsd By: | Date: | Revisions: | |
| Revsd By: | Date: | Revisions: | |
| Drawn By: JR | Date: 10/10/14 | Checked By: | Date: |

1070 TECHNOLOGY DRIVE
N. VENICE, FL 34275
(941)-480-1600
CERT. OF AUTH. #29296

PGT®

Description: EXTRUSIONS
Title: SERIES 770 ALUM. SGD - LM IMPACT

| Series/Model: | Scale: | Sheet: | Drawing No. | Rev: |
|---|---|---|---|---|
| SGD-770 | NTS | 21 of 22 | PGT0130 | |

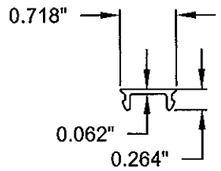


(5) FRAME SCREW COVER (6063-T6 AL)

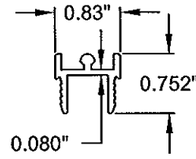


(11) SILL TRACK (6063-T6 AL)

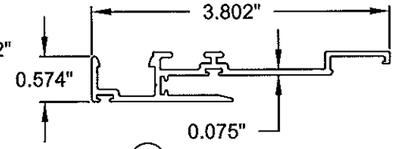


(26) P-HOOK (6063-T6 AL)

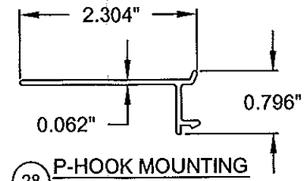


(28) P-HOOK MOUNTING ADAPTOR (6063-T6 AL)

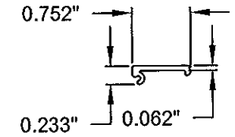


(29) P-HOOK SCREW COVER (6063-T6 AL)

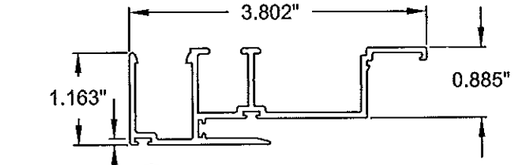


(30) P-HOOK FOR BOX RISER (6063-T6 AL)

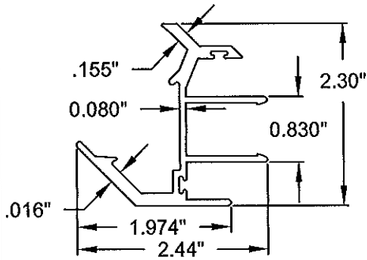


(31) 135° CORNER (6063-T6 AL)

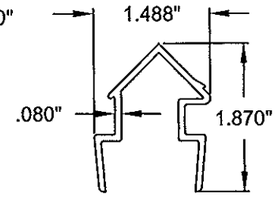


(32) 135° FIXED MOUNT (6063-T6 AL)

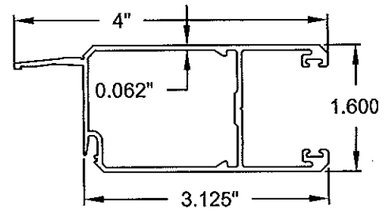


(60) STANDARD STILE (6063-T6 AL)

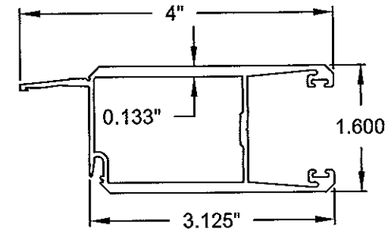


(61) HEAVY DUTY STILE (6063-T6 AL)

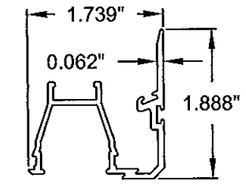


(62) INTERLOCK ADAPTER (6063-T6 AL)

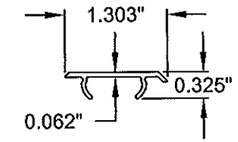


(65) INTERLOCK SCREW COVER (6063-T6 AL)

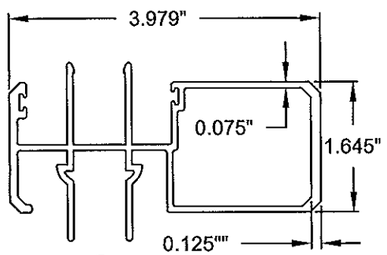


(67) STANDARD ASTRAGAL (6063-T6 AL)

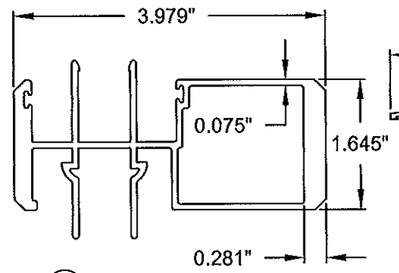


(68) HEAVY DUTY ASTRAGAL (6063-T6 AL)

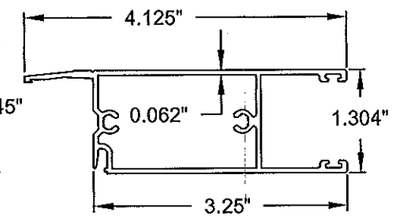


(69) TOP/BOTTOM RAIL (6063-T6 AL)

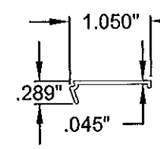


(79) GLAZING BEAD (I.G.) (6063-T6 AL)

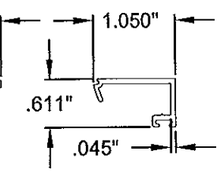


(80) 7/16" GLAZING BEAD, FIXED PANEL CLIP (6063-T6 AL)

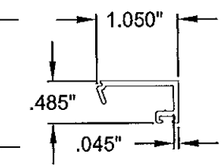


(81) 9/16" GLAZING BEAD (6063-T6 AL)

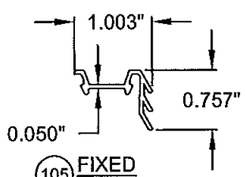


(105) FIXED PANEL CLIP (6063-T6 AL)

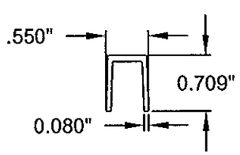


(106) FIXED PANEL RETAINER, 9/16" (6063-T6 AL)

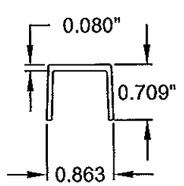


(123) FIXED PANEL RETAINER, 7/8" (6063-T6 AL)

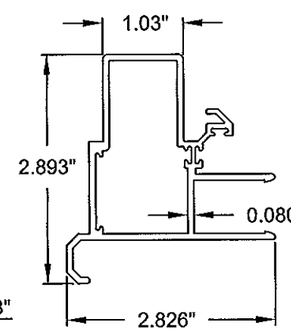


(118) 90° CORNER RECEIVER (6063-T6 AL)

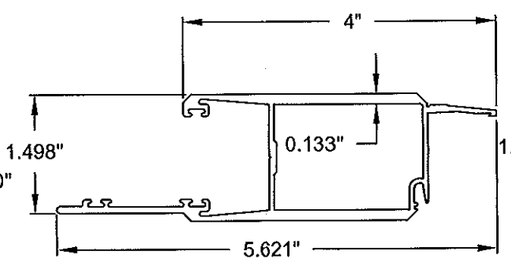


(119) 90° OUTSIDE CORNER ASTRAGAL (6063-T6 AL)

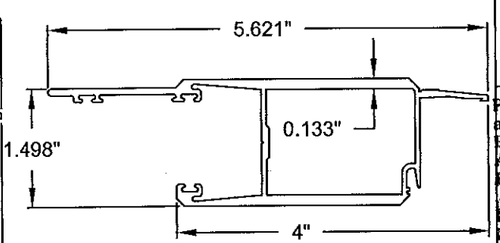


(120) 90° INSIDE CORNER ASTRAGAL (6063-T6 AL)

PRODUCT RENEWED
as complying with the Florida
Building Code
Acceptance No 14-0128.11
Expiration Date 12/14/2020
By
Miami Dade Product Control

ANTHONY LYNN MILLER
LICENSE
No. 58705
1/30/15
STATE OF FLORIDA
PROFESSIONAL ENGINEER
A. LYNN MILLER, P.E.
P.E.# 58705

| Revsd By: | Date: | Revisions: | |
|---|---|---|---|
| Revsd By: | Date: | Revisions: | |
| Revsd By: | Date: | Revisions: | |
| Drawn By: JR | Date: 10/10/14 | Checked By: | Date: |

1070 TECHNOLOGY DRIVE
N. VENICE, FL 34275
(941)-480-1600
CERT. OF AUTH. #29296

PGT®

Description: EXTRUSIONS

Title: SERIES 770 ALUM. SGD - LM IMPACT

| Series/Model: | Scale: | Sheet: | Drawing No. | Rev: |
|---|---|---|---|---|
| SGD-770 | NTS | 22 of 22 | PGT0130 | |