MIAMI-DADE COUNTY
DEPARTMENT OF REGULATORY AND ECONOMIC RESOURCES (RER)
BOARD AND CODE ADMINISTRATION DIVISION

MIAMI-DADE COUNTY
PRODUCT CONTROL SECTION
11805 SW 26 Street, Room 208
T (786) 315-2590 F (786) 315-2599
www.miamidade.gov/economy

NOTICE OF ACCEPTANCE (NOA)

Trulite Glass & Aluminum Solutions, LLC
800 Fairway Drive, Suite 200
Deerfield Beach, FL 33441

SCOPE:

This NOA is being issued under the applicable rules and regulations governing the use of construction materials. The documentation submitted has been reviewed and accepted by Miami-Dade County RER - Product Control Section to be used in Miami Dade County and other areas where allowed by the Authority Having Jurisdiction (AHJ).

This NOA shall not be valid after the expiration date stated below. The Miami-Dade County Product Control Section (In Miami Dade County) and/or the AHJ (in areas other than Miami Dade County) reserve the right to have this product or material tested for quality assurance purposes. If this product or material fails to perform in the accepted manner, the manufacturer will incur the expense of such testing and the AHJ may immediately revoke, modify, or suspend the use of such product or material within their jurisdiction. RER reserves the right to revoke this acceptance, if it is determined by Miami-Dade County Product Control Section that this product or material fails to meet the requirements of the applicable building code.

This product is approved as described herein, and has been designed to comply with the Florida Building Code, including the High Velocity Hurricane Zone.

DESCRIPTION: Series "IFG-5100 Resistor" Aluminum Storefront / Window Wall System – L.M.I.

APPROVAL DOCUMENT: Drawing No. **AD14-05**, titled "IFG-5100 Alum. Storefront Window Wall System Large-Missile Impact - Resistor", sheets 1 through 14 of 14, dated 03/26/14, with revision #1 dated 03/28/14, prepared by MCY Engineering, Inc., signed and sealed by Yiping Wang, P.E., bearing the Miami-Dade County Product Control Revision stamp with the Notice of Acceptance number and expiration date by the Miami-Dade County Product Control Section.

MISSILE IMPACT RATING: Large Missile and Small Impact Resistant

LABELING: Each unit shall bear a permanent label with the manufacturer's name or logo, city, state, model/series, and following statement: "Miami-Dade County Product Control Approved", unless otherwise noted herein.

RENEWAL of this NOA shall be considered after a renewal application has been filed and there has been no change in the applicable building code negatively affecting the performance of this product.

TERMINATION of this NOA will occur after the expiration date or if there has been a revision or change in the materials, use, and/or manufacture of the product or process. Misuse of this NOA as an endorsement of any product, for sales, advertising or any other purposes shall automatically terminate this NOA. Failure to comply with any section of this NOA shall be cause for termination and removal of NOA.

ADVERTISEMENT: The NOA number preceded by the words Miami-Dade County, Florida, and followed by the expiration date may be displayed in advertising literature. If any portion of the NOA is displayed, then it shall be done in its entirety.

INSPECTION: A copy of this entire NOA shall be provided to the user by the manufacturer or its distributors and shall be available for inspection at the job site at the request of the Building Official.

This NOA **revises and renews NOA# 11-1114.24** and consists of this page 1 and evidence pages E-1 and E-2, as well as approval document mentioned above.

The submitted documentation was reviewed by **Manuel Perez, P.E.**

MIAMI-DADE COUNTY APPROVED

4/7/14

NOA No. 14-0203.02
Expiration Date: March 11, 2019
Approval Date: April 17, 2014

Trulite Glass & Aluminum Solutions, LLC

NOTICE OF ACCEPTANCE: EVIDENCE SUBMITTED

A. DRAWINGS

1. Manufacturer's die drawings and sections.
2. Drawing No. **AD14-05**, titled "IFG-5100 Alum. Storefront Window Wall System Large Missile Impact - Resistor", sheets 1 through 14 of 14, dated 03/26/11, with revision #1 dated 03/28/14, prepared by MCY Engineering, Inc., signed and sealed by Yiping Wang, P.E.

B. TESTS

1. Test reports on: 1) Air Infiltration Test, per FBC, TAS 202-94
   2) Uniform Static Air Pressure Test, Loading per FBC TAS 202-94
   3) Water Resistance Test, per FBC, TAS 202-94
   4) Large Missile Impact Test per FBC, TAS 201-94
   5) Cyclic Wind Pressure Loading per FBC, TAS 203-94

   along with marked-up drawings and installation diagram of a series IFG 5100 aluminum storefront system, prepared by Fenestration Testing Laboratory, Inc., Test Report No. **FTL-6239**, dated 02/21/11, signed and sealed by Marlin D. Brinson, P.E. ***(Submitted under previous NOA# 11-1114.24)***
2. Test reports on: 1) Uniform Static Air Pressure Test, Loading per FBC TAS 202-94
   2) Large Missile Impact Test per FBC, TAS 201-94
   3) Cyclic Wind Pressure Loading per FBC, TAS 203-94

   along with marked-up drawings and installation diagram of a series IFG 5100 aluminum storefront system, prepared by Fenestration Testing Laboratory, Inc., Test Report No. **FTL-5266**, dated 11/02/07, signed and sealed by Michael Wenzel, P.E. ***(Submitted under previous NOA# 08-1015.08)***
3. Test reports on: 1) Uniform Static Air Pressure Test, Loading per FBC TAS 202-94
   2) Large Missile Impact Test per FBC, TAS 201-94
   3) Cyclic Wind Pressure Loading per FBC, TAS 203-94

   along with marked-up drawings and installation diagram of a series IFG 5100 aluminum storefront system, prepared by Fenestration Testing Laboratory, Inc., Test Report No. **FTL-5267**, dated 08/03/07, signed and sealed by Michael Wenzel, P.E. ***(Submitted under NOA# 08-1015.08)***
4. Test reports on: 1) Air Infiltration Test, per FBC, TAS 202-94
   2) Uniform Static Air Pressure Test, Loading per FBC TAS 202-94
   3) Water Resistance Test, per FBC, TAS 202-94
   4) Large Missile Impact Test per FBC, TAS 201-94
   5) Cyclic Wind Pressure Loading per FBC, TAS 203-94

   along with marked-up drawings and installation diagram of a series IFG 5100 aluminum storefront system, prepared by Fenestration Testing Laboratory, Inc., Test Report No. **FTL-5268**, dated 11/14/07, signed and sealed by Carlos S. Rionda, P.E. ***(Submitted under NOA# 08-1015.08)***

Manuel Perez, P.E.
Product Control Examiner
NOA No. 14-0203.02
Expiration Date: March 11, 2019
Approval Date: April 17, 2014

NOTICE OF ACCEPTANCE: EVIDENCE SUBMITTED

C. CALCULATIONS:

1. Anchor verification calculations and structural analysis, complying with **FBC-2010** and **2014**, dated 03/27/14, prepared by MCY Engineering, Inc., signed and sealed by Yiping Wang, P.E.
2. Glazing complies with **ASTM E1300-04**

D. QUALITY ASSURANCE

1. Miami-Dade Department of Regulatory and Economic Resources (RER)

E. MATERIAL CERTIFICATIONS

1. Notice of Acceptance No. **11–0624.02** issued to **E.I. DuPont DeNemours & Co.**, Inc. for their "**DuPont SentryGlas® Interlayer**" dated 08/25/11, expiring on 01/14/17.
2. Notice of Acceptance No. **13–0129.27** issued to **E.I. DuPont DeNemours & Co., Inc.** for their "**DuPont Butacite® PVB Interlayer**" dated 04/11/13, expiring on 12/11/16.
3. Notice of Acceptance No. **12–1231.09** issued to **Eastman Chemical Company (MA)** for their "**Saflex HP Clear or Color Glass Interlayers**" dated 03/28/13, expiring on 04/14/18.

F. STATEMENTS

1. Statement letter of conformance, complying with **FBC-2010** and **FBC-2014**, dated 03/27/14, prepared by MCY Engineering, Inc., signed and sealed by Yiping Wang, P.E.
2. Statement letter of no financial interest, dated 04/26/14, prepared by MCY Engineering, Inc., signed and sealed by Yiping Wang, P.E.
3. Laboratory compliance letter for Test Reports No.: **FTL-5266, FTL-5267** and **FTL-5268**, all issued by Fenestration Testing Laboratory, Inc.
   (Submitted under NOA# 08-1015.08)
4. Notification of Successor Engineer for manufacturer's NOA document per **Section 61G15-27.001** of the **Florida Administrative Code**, notifying original engineer that the successor engineer is assuming full professional and legal responsibility for all engineering documents pertaining to this NOA, dated April 8, 2014, signed and sealed by Yiping Wang, P.E.

G. OTHERS

1. Notice of Acceptance No. **11-1114.24**, issued to Trulite Glass & Aluminum Solutions, LLC, for their Series "IFG-5100 Resistor" Aluminum Storefront / Window Wall System – L.M.I., approved on 06/14/12 and expiring on 03/11/14.

Manuel Perez, P.E.
Product Control Examiner
NOA No. 14-0203.02
Expiration Date: March 11, 2019
Approval Date: April 17, 2014

TRULITE SERIES IFG 5100 STOREFRONT SYSTEM - LARGE MISSILE IMPACT

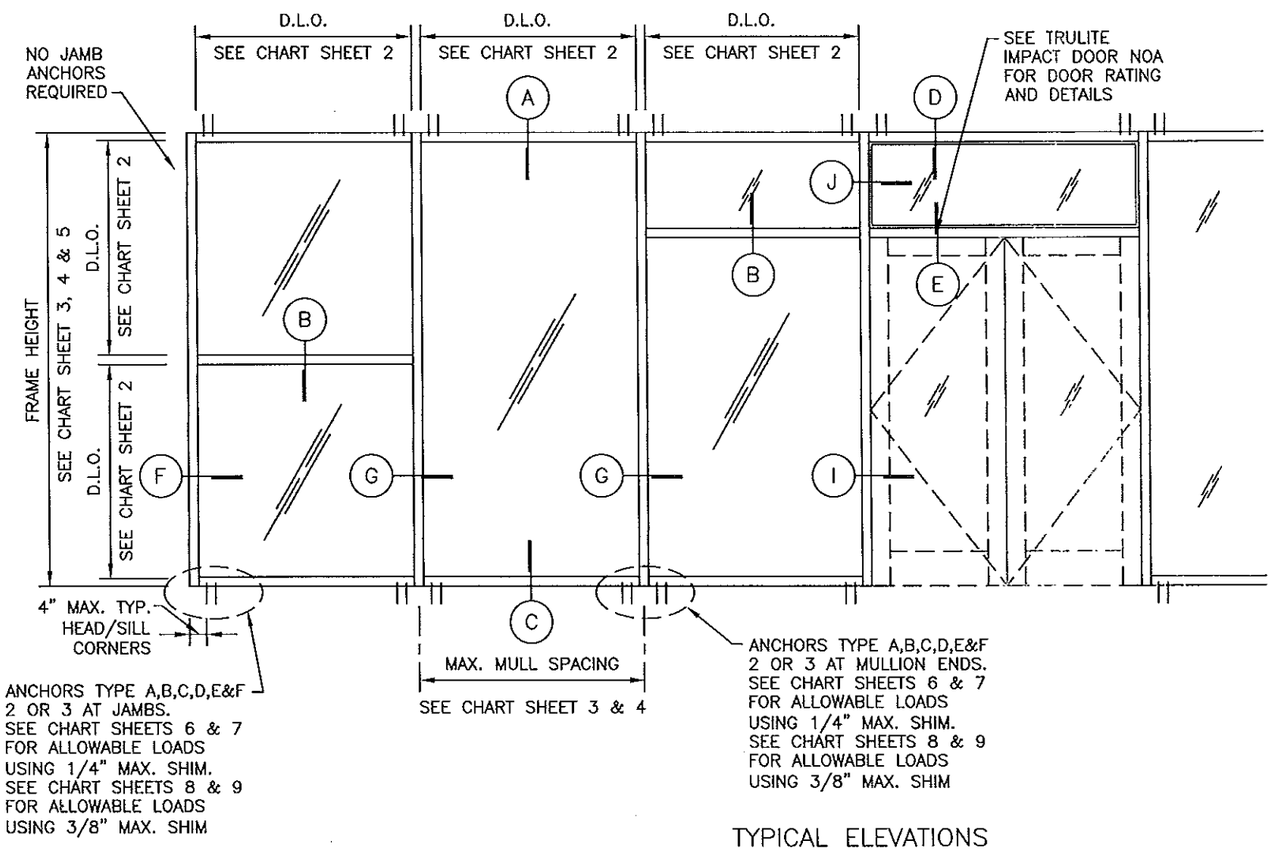

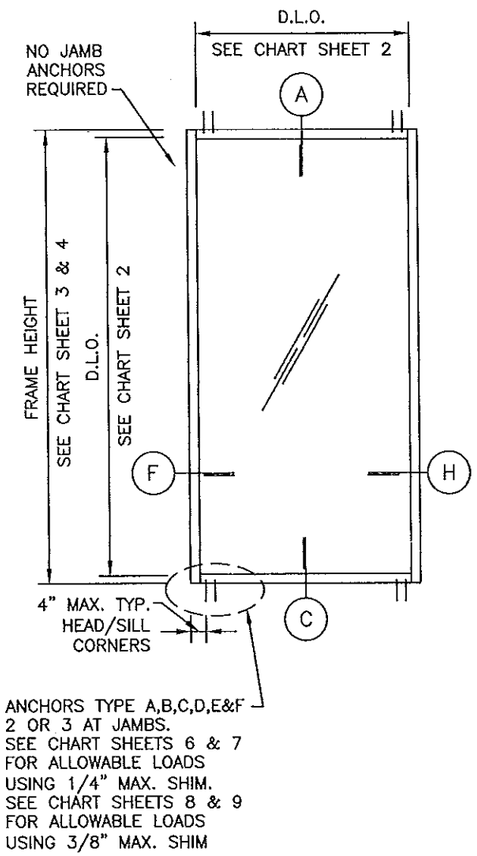

TYPICAL ELEVATIONS

SERIES IFG 5100 STOREFRONT SYSTEM

THIS SYSTEM IS RATED FOR LARGE MISSILE IMPACT. SHUTTERS ARE NOT REQUIRED.

CODE REQUIREMENTS FOR SAFEGUARDS MUST BE OBSERVED.

THIS PRODUCT HAS BEEN DESIGNED AND TESTED TO COMPLY WITH THE REQUIREMENTS OF THE FLORIDA BUILDING CODE 2010/2014 EDITION INCLUDING HIGH VELOCITY HURRICANE ZONE.

WOOD BUCKS, BY OTHERS, MUST BE ANCHORED PROPERLY TO TRANSFER LOADS TO THE STRUCTURE.

ANCHORS SHALL BE AS LISTED AND SHOWN ON THE DETAILS. ANCHOR EMBEDMENT TO BASE MATERIAL SHALL BE BEYOND WALL DRESSING OR STUCCO.

ANCHORING OR LOADING CONDITIONS NOT SHOWN IN THESE DETAILS ARE NOT PART OF THIS APPROVAL.

A 33% INCREASE IN ALLOWABLE STRESS IS NOT USED IN THE DESIGN OF THIS SYSTEM.

ALL STEEL IN CONTACT WITH ALUMINUM TO BE PAINTED OR PLATED.

INSTRUCTIONS:

USE CHARTS AS FOLLOWS.

STEP 1: DETERMINE DESIGN WIND LOAD REQUIREMENTS BASED ON WIND VELOCITY, BLDG. HEIGHT, WIND ZONE USING APPLICABLE ASCE 7 STANDARD.

STEP 2: SEE CHARTS ON SHEET 2 FOR DESIGN LOAD CAPACITY OF DESIRED GLASS SIZE BASED ON ASTM E-1300-04 AND PRODUCT TESTING.

STEP 3: CHECK MULLION AND JAMB CAPACITY FOR GIVEN SPACING AND HEIGHT USING CHARTS ON SHEET 3, 4 & 5. THE CAPACITY SHOULD EXCEED THE DESIGN LOAD.

STEP 4: USING CHART ON SHEET 6, 7, 8 & 9 SELECT ANCHOR OPTION WITH DESIGN RATING MORE THAN DESIGN LOAD SPECIFIED IN STEP 1 ABOVE.

STEP 5: THE LOWEST VALUE RESULTING FROM STEPS 2, 3 AND 4 SHALL APPLY TO ENTIRE SYSTEM.

Trulite
GLASS & ALUMINUM SOLUTIONS™
http://www.trulite.com
800 FAIRWAY DRIVE, Suite 200
DEERFIELD BEACH, FL 33441
p. 800-432-8132 | f. 954-724-2083

PRODUCT:

IFG-5100
ALUM. STOREFRONT WINDOW WALL SYSTEM LARGE-MISSILE IMPACT

Resistor
BLAST & STORM PROTECTION™

REVN	DATE/REMARKS
1	3.28.14/REVISION

ENGINEER:
MCY ENGINEERING, INC.
GLAZING CONSULTANT
8501 SW 124 Ave. Ste. 205A
MIAMI, FL 33183
P: 305-271-0117
Email: MCY.Engineering@att.net
www.MCYEngineering.com

STAMP:
YIPING WANG, P.E.
FLORIDA REGISTRATION
PE #55983
C.A.N. 28677
APR 07 2014

PRODUCT CONTROL APPROVAL:

PRODUCT REVISED
as complying with the Florida Building Code
Acceptance No 14-0203.06
Expiration Date March 11, 2019
By Manuel Pres
Miami-Dade Product Control

DRAWN: TRULITE	DRAWING No:
DATE: 03.26.14	1 OF 14
DWG: AD14-05	

DESIGN LOAD CAPACITY (PSF)			
NOMINAL DIMS.		GLASS TYPE "A"	GLASS TYPE "B"
D.L.O. WIDTH	D.L.O. HEIGHT	EXT. (+) INT. (−)	EXT. (+) INT. (−)
≤30"	67"	100.0	100.0
36"		100.0	100.0
40"		100.0	80.0
45"		100.0	80.0
51"		100.0	80.0
56"		80.0	80.0
≤30"	79"	100.0	100.0
36"		100.0	80.0
40"		100.0	80.0
45"		100.0	80.0
48"		80.0	80.0
≤24"	91"	100.0	100.0
30"		100.0	80.0
36"		100.0	80.0
40"		80.0	80.0
42"		80.0	80.0
≤24"	103"	100.0	100.0
30"		100.0	80.0
36"		80.0	80.0
≤18"	115"	100.0	100.0
24"		100.0	80.0
30"		100.0	80.0
33"		80.0	80.0
≤18"	127"	100.0	100.0
24"		100.0	80.0
30"		80.0	80.0
≤18"	139"	100.0	100.0
24"		100.0	80.0
27.5"		80.0	80.0

DESIGN LOAD CAPACITY (PSF)			
NOMINAL DIMS.		GLASS TYPE "C"	GLASS TYPE "D"
D.L.O. WIDTH	D.L.O. HEIGHT	EXT. (+) INT. (−)	EXT. (+) INT. (−)
≤30"	67"	80.0	80.0
36"		80.0	80.0
40"		80.0	80.0
45"		80.0	80.0
51"		80.0	80.0
57.5"		55.0	80.0
≤30"	79"	80.0	80.0
36"		80.0	80.0
40"		80.0	80.0
45"		55.0	55.0
51"		55.0	55.0
57.5"		55.0	55.0
≤30"	91"	80.0	80.0
36"		80.0	80.0
40"		80.0	80.0
45"		55.0	55.0
51"		55.0	55.0
57.5"		55.0	55.0
≤30"	103"	80.0	80.0
36"		80.0	80.0
40"		55.0	55.0
45"		55.0	55.0
51"		55.0	55.0
57.5"		55.0	55.0

NOTE:
GLASS CHECKED PER ASTM E1300−04 AND TESTING

DESIGN LOAD CAPACITY (PSF)			
NOMINAL DIMS.		GLASS TYPE "C"	GLASS TYPE "D"
D.L.O. WIDTH	D.L.O. HEIGHT	EXT. (+) INT. (−)	EXT. (+) INT. (−)
≤30"	114.5"	80.0	80.0
36"		55.0	55.0
40"		55.0	55.0
45"		55.0	55.0
51"		55.0	55.0
57.5"		55.0	55.0
≤30"	127"	80.0	–
≤27.5"	139"	80.0	–

NOTE:
IN ORDER TO COMPLY WITH FBC SECTION 2411.4 "GLAZED PANEL SAFEGUARDS" THE OUTBOARD LITE MUST BE TEMPERED AND COMPLY WITH FED. STD. 16 CFR 1201 WHERE REQUIRED. ie. GLASS LITES AT GROUND LEVEL AND NEXT TO DOORS.

TYPICAL GLAZING DETAIL

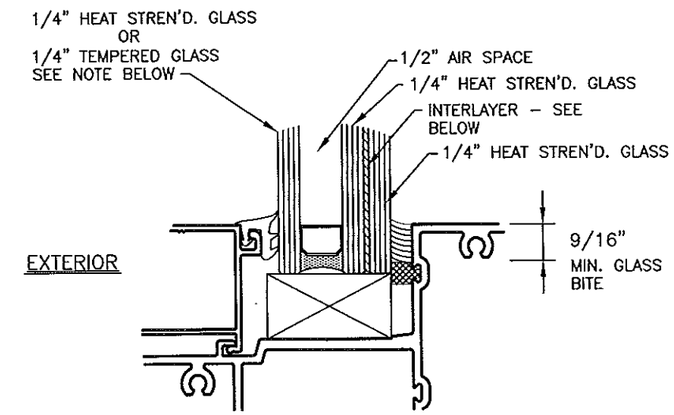

GLASS TYPES

"A" – .100" SENTRYGLAS INTERLAYER BY DUPONT

"B" – .100" SAFLEX HP INTERLAYER BY EASTMAN CHEMICAL COMPANY

"C" – .090" SENTRYGLAS INTERLAYER BY DUPONT

"D" – .090" PVB INTERLAYER BUTACITE BY DUPONT

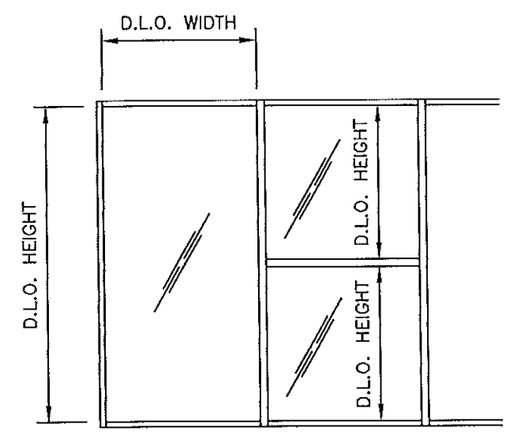

STEP 2: GLASS OPTION

Trulite
GLASS & ALUMINUM SOLUTIONS™
http://www.trulite.com
800 FAIRWAY DRIVE, Suite 200
DEERFIELD BEACH, FL 33441
p. 800-432-8132 | f. 954-724-2083

PRODUCT:

IFG-5100
ALUM. STOREFRONT WINDOW WALL SYSTEM LARGE-MISSILE IMPACT

Resistor
BLAST & STORM PROTECTION™

REVN	DATE/REMARKS
1	3.28.14/REVISION

ENGINEER:
MCY ENGINEERING, INC.
GLAZING CONSULTANT
8501 SW 124 Ave. Ste. 205A
MIAMI, FL 33183
P: 305-271-0117
Email: MCY.Engineering@att.net
www.MCYEngineering.com

STAMP:
YIPING WANG, P.E.
FLORIDA REGISTRATION
PE #55983
C.A.N. 28677
APR 07 2014

PRODUCT CONTROL APPROVAL:

PRODUCT REVISED
as complying with the Florida Building Code
Acceptance No 14-0203.02
Expiration Date March 11, 2019
By Manuel Diaz
Miami Dade Product Control

DRAWN: TRULITE	DRAWING No:
DATE: 03.26.14	2 OF 14
DWG: AD14−05	

MULLION LOAD CAPACITY – PSF 51501/51506 MULLION			MULLION LOAD CAPACITY – PSF 51501/51506 MULLION		
NOMINAL DIMS.		MAX. Pd	NOMINAL DIMS.		MAX. Pd
WIDTH (W)	FRAME HEIGHT	EXT. (+) INT. (–)	WIDTH (W)	FRAME HEIGHT	EXT. (+) INT. (–)
≤24"	60"	100.0	≤24"	108"	80.0
30"		100.0	30"		80.0
36"		100.0	36"		80.0
42"		100.0	42"		55.0
48"		100.0	48"		55.0
54"		100.0	54"		55.0
60"		100.0	60"		55.0
24"	72"	100.0	24"	120"	80.0
30"		100.0	30"		80.0
36"		100.0	36"		80.0
42"		100.0	42"		55.0
48"		100.0	48"		55.0
54"		100.0	54"		55.0
60"		80.0	60"		55.0
24"	84"	100.0	24"	132"	80.0
30"		100.0	30"		80.0
36"		100.0	32"		80.0
42"		100.0	24"	144"	80.0
48"		100.0	28"		68.6
54"		55.0	30"		64.0
60"		55.0			
24"	96"	80.0			
30"		80.0			
36"		80.0			
42"		80.0			
48"		55.0			
54"		55.0			
60"		55.0			

TYPICAL ELEVATION

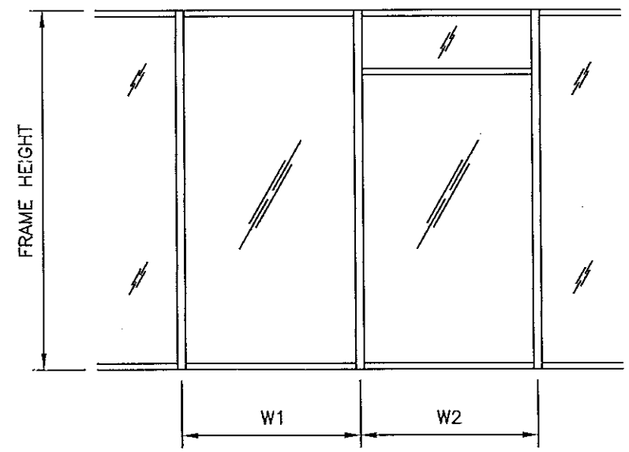

$$\text{WIDTH (W)} = \frac{W1 + W2}{2}$$

TYPICAL MULLION

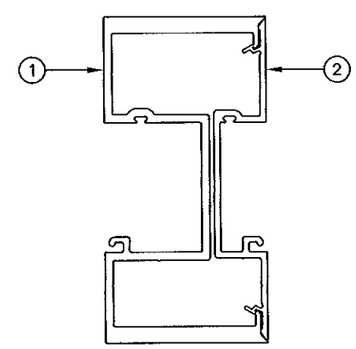

51501/51506

STEP 3A: MULLION LOAD CAPACITY

Trulite
GLASS & ALUMINUM SOLUTIONS™
http://www.trulite.com
800 FAIRWAY DRIVE, Suite 200
DEERFIELD BEACH, FL 33441
p. 800-432-8132 | f. 954-724-2083

PRODUCT:

IFG-5100
ALUM. STOREFRONT WINDOW WALL SYSTEM LARGE-MISSILE IMPACT

Resistor
BLAST & STORM PROTECTION™

REVN	DATE/REMARKS
1	3.28.14/REVISION

ENGINEER:
MCY ENGINEERING, INC.
GLAZING CONSULTANT
8501 SW 124 Ave. Ste. 205A
MIAMI, FL 33183
P: 305-271-0117
Email: MCY.Engineering@att.net
www.MCYEngineering.com

STAMP:
YIPING WANG, P.E.
FLORIDA REGISTRATION
PE #55983
C.A.N. 28677

APR 07 2014

PRODUCT CONTROL APPROVAL:

PRODUCT REVISED
as complying with the Florida
Building Code
Acceptance No 14-0203.03
Expiration Date March 1, 2019
By Manuel Perez
Miami-Dade Product Control

DRAWN: TRULITE	DRAWING No:
DATE: 03.26.14	3 OF 14
DWG: AD14–05	

JAMB LOAD CAPACITY – PSF 51501/51506 JAMB			JAMB LOAD CAPACITY – PSF 51501/51506 JAMB		
NOMINAL DIMS.		MAX. Pd	NOMINAL DIMS.		MAX. Pd
WIDTH (W)	FRAME HEIGHT	EXT. (+) INT. (–)	WIDTH (W)	FRAME HEIGHT	EXT. (+) INT. (–)
≤12"	60"	100.0	≤12"	108"	80.0
15"		100.0	15"		80.0
18"		100.0	18"		80.0
21"		100.0	21"		55.0
24"		100.0	24"		55.0
27"		100.0	27"		55.0
30"		100.0	30"		55.0
12"	72"	100.0	12"	120"	80.0
15"		100.0	15"		80.0
18"		100.0	18"		80.0
21"		100.0	21"		55.0
24"		100.0	24"		55.0
27"		100.0	27"		55.0
30"		80.0	30"		55.0
12"	84"	100.0	12"	132"	80.0
15"		100.0	15"		80.0
18"		100.0	18"		80.0
21"		100.0	12"	144"	80.0
24"		100.0	15"		80.0
27"		55.0			
30"		55.0			
12"	96"	80.0			
15"		80.0			
18"		80.0			
21"		80.0			
24"		55.0			
27"		55.0			
30"		55.0			

TYPICAL ELEVATION

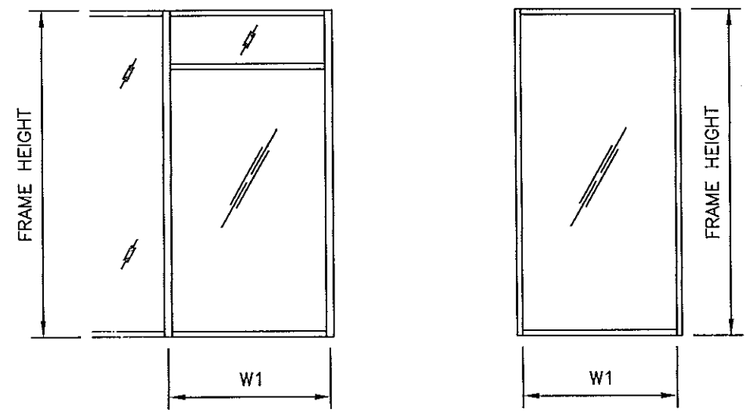

WIDTH (W) = $\frac{W1\ (JAMB)}{2}$

WIDTH (W) = $\frac{W1\ (JAMB)}{2}$

TYPICAL JAMB

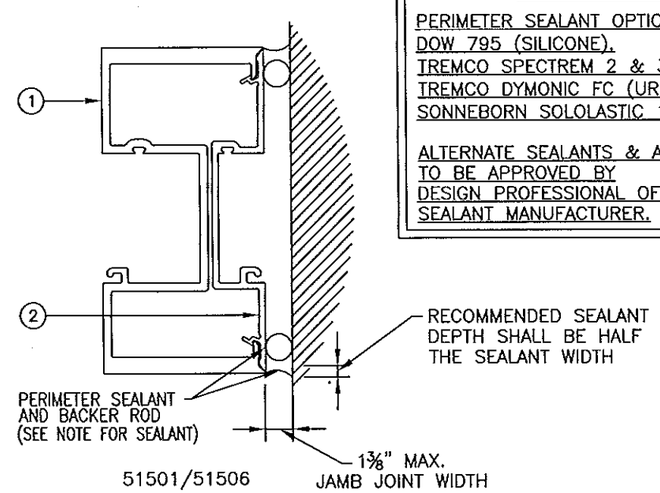

51501/51506

EXTERIOR

SEALANT NOTES:

PERIMETER SEALANT OPTIONS:
DOW 795 (SILICONE).
TREMCO SPECTREM 2 & 3 (SILICONE)
TREMCO DYMONIC FC (URETHANE)
SONNEBORN SOLOLASTIC 150 (ELASTOMERIC)

ALTERNATE SEALANTS & ALTERNATE JAMB GAPS: TO BE APPROVED BY DESIGN PROFESSIONAL OF RECORD AND SEALANT MANUFACTURER.

STEP 3B: MULLION JAMB CAPACITY

Trulite
GLASS & ALUMINUM SOLUTIONS™
http://www.trulite.com
800 FAIRWAY DRIVE, Suite 200
DEERFIELD BEACH, FL 33441
p. 800-432-8132 | f. 954-724-2083

PRODUCT:

IFG-5100
ALUM. STOREFRONT WINDOW WALL SYSTEM LARGE-MISSILE IMPACT

Resistor
BLAST & STORM PROTECTION™

REVN	DATE/REMARKS
1	3.28.14/REVISION

ENGINEER:
MCY ENGINEERING, INC.
GLAZING CONSULTANT
8501 SW 124 Ave. Ste. 205A
MIAMI, FL 33183
P: 305-271-0117
Email: MCY.Engineering@att.net
www.MCYEngineering.com

STAMP:
YIPING WANG, P.E.
FLORIDA REGISTRATION
PE #55983
C.A.N. 28677
APR 07 2014

PRODUCT CONTROL APPROVAL:

PRODUCT REVISED
as complying with the Florida Building Code
Acceptance No 14-0403.02
Expiration Date March 11, 2019
By
Miami Dade Product Control

DRAWN: TRULITE	DRAWING No:
DATE: 03.26.14	4 OF 14
DWG: AD14–05	

UN–REINFORCED

DOOR JAMB LOAD CAPACITY – PSF 50512/51506 JAMB		
NOMINAL DIMS.		MAX. Pd
WIDTH (W)	FRAME HEIGHT	EXT. (+) INT. (–)
≤24"	84"	80.0
30"		80.0
36"		80.0
42"		80.0
48"		80.0
54"		80.0
60"		80.0
66"		80.0
72"		80.0
24"	96"	80.0
30"		80.0
36"		80.0
42"		80.0
48"		80.0
54"		80.0
60"		80.0
66"		80.0
72"		–
24"	108"	80.0
30"		80.0
36"		80.0
42"		80.0
48"		77.0
54"		68.0
60"		61.0
24"	120"	80.0
30"		80.0
36"		76.0
42"		65.0
48"		57.0
54"		50.0
60"		–

REINFORCED

DOOR JAMB LOAD CAPACITY – PSF 50512/51506 JAMB		
NOMINAL DIMS.		MAX. Pd
WIDTH (W)	FRAME HEIGHT	EXT. (+) INT. (–)
≤24"	84"	80.0
30"		80.0
36"		80.0
42"		80.0
48"		80.0
54"		80.0
60"		80.0
66"		80.0
72"		80.0
24"	96"	80.0
30"		80.0
36"		80.0
42"		80.0
48"		80.0
54"		80.0
60"		80.0
66"		80.0
72"		–
24"	108"	80.0
30"		80.0
36"		80.0
42"		80.0
48"		80.0
54"		80.0
60"		80.0
24"	120"	80.0
30"		80.0
36"		80.0
42"		80.0
48"		80.0
54"		75.0
60"		–

TYPICAL ELEVATION

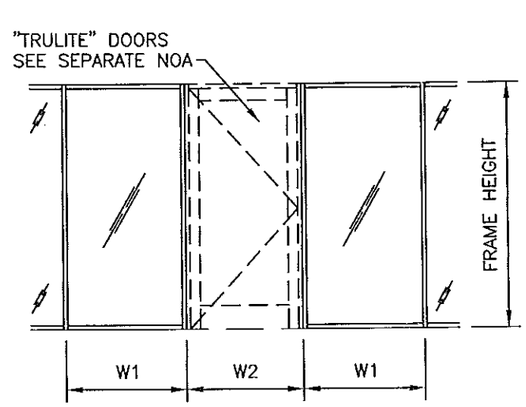

WIDTH (W) = $\frac{W1 + W2}{2}$ (MULLION)

WIDTH (W) = W1 (JAMB)

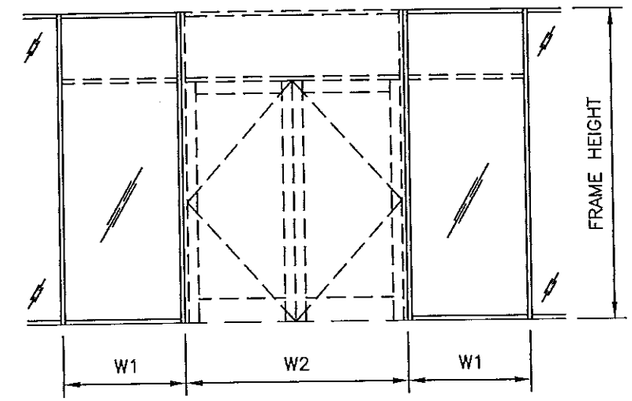

WIDTH (W) = $\frac{W1 + W2}{2}$ (MULLION)

WIDTH (W) = W1 (JAMB)

TYPICAL DOOR JAMB

UN–REINFORCED

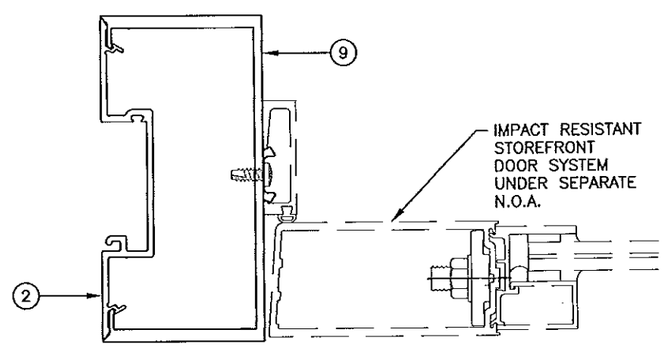

51506/50512

REINFORCED

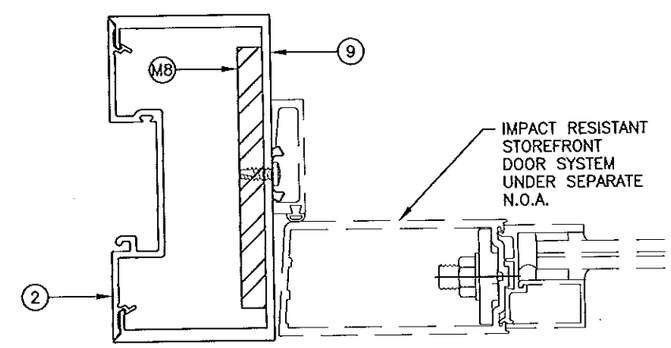

51506/50512 WITH
3/8" x 4" FLAT STEEL
REINFORCING

STEP 3C: DOOR JAMB CAPACITY

Trulite
GLASS & ALUMINUM SOLUTIONS™
http://www.trulite.com
800 FAIRWAY DRIVE, Suite 200
DEERFIELD BEACH, FL 33441
p. 800-432-8132 | f. 954-724-2083

PRODUCT:

IFG-5100
ALUM. STOREFRONT
WINDOW WALL SYSTEM
LARGE-MISSILE IMPACT

Resistor
BLAST & STORM PROTECTION™

REVN	DATE/REMARKS
1	3.28.14/REVISION

ENGINEER:
MCY ENGINEERING, INC.
GLAZING CONSULTANT
8501 SW 124 Ave. Ste. 205A
MIAMI, FL 33183
P: 305-271-0117
Email: MCY.Engineering@att.net
www.MCYEngineering.com

STAMP:
YIPING WANG, P.E.
FLORIDA REGISTRATION
PE #55983
C.A.N. 28677

APR 07 2014

PRODUCT CONTROL APPROVAL:

PRODUCT REVISED
as complying with the Florida
Building Code
Acceptance No 14-0203.02
Expiration Date March 11, 2019
By Manuel Perez
Miami Dade Product Control

DRAWN: TRULITE	DRAWING No:
DATE: 03.26.14	5 OF 14
DWG: AD14–05	

MULLION AND JAMB ANCHOR LOAD CAPACITY (PSF)
FOR 1/4" MAX. SHIM

NOMINAL DIMS.		ANCHOR TYPE			NOMINAL DIMS.		ANCHOR TYPE		
		"A2"	"B2"	"C2"			"A2"	"B2"	"C2"
WIDTH (W)	FRAME HEIGHT	EXT. (+) INT. (-)	EXT. (+) INT. (-)	EXT. (+) INT. (-)	WIDTH (W)	FRAME HEIGHT	EXT. (+) INT. (-)	EXT. (+) INT. (-)	EXT. (+) INT. (-)
≤ 24		100.0	100.0	100.0	24		80.0	80.0	80.0
30		100.0	100.0	100.0	30		80.0	80.0	80.0
36		100.0	100.0	100.0	36		80.0	80.0	71.7
42		100.0	100.0	92.2	42	108	55.0	55.0	55.0
48	72	100.0	100.0	80.7	48		55.0	55.0	53.8
54		99.0	100.0	71.7	54		55.0	55.0	47.8
60		80.0	80.0	64.5	60		55.0	55.0	43.0
66		55.0	55.0	55.0	66		54.0	55.0	39.1
72		55.0	55.0	53.8	24		80.0	80.0	80.0
24		100.0	100.0	100.0	30		80.0	80.0	80.0
30		100.0	100.0	100.0	36		80.0	80.0	67.9
36		100.0	100.0	92.2	42	114	55.0	55.0	55.0
42		100.0	100.0	79.0	48		55.0	55.0	50.9
48	84	95.4	100.0	69.1	54		55.0	55.0	45.3
54		55.0	55.0	55.0	60		55.0	55.0	40.8
60		55.0	55.0	55.0	24		80.0	80.0	80.0
66		55.0	55.0	50.3	30		80.0	80.0	77.4
72		55.0	55.0	46.1	36		80.0	80.0	64.5
24		80.0	80.0	80.0	42	120	55.0	55.0	55.0
30		80.0	80.0	80.0	48		55.0	55.0	48.4
36		80.0	80.0	80.0	54		55.0	55.0	43.0
42		80.0	80.0	69.1	60		53.4	55.0	38.7
48	96	55.0	55.0	55.0	24		80.0	80.0	80.0
54		55.0	55.0	53.8	30	132	74.2	80.0	53.8
60		55.0	55.0	48.4	36		55.0	55.0	55.0
66		55.0	55.0	44.0	24	144	80.0	80.0	80.0
72		55.0	55.0	40.3	30		80.0	80.0	64.5

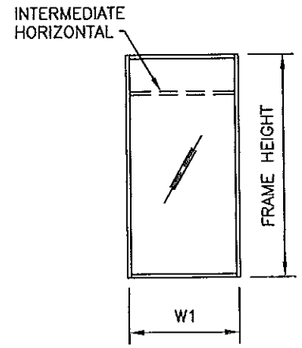

$$\text{WIDTH (W)} = \frac{\text{W1 (JAMB)}}{2}$$

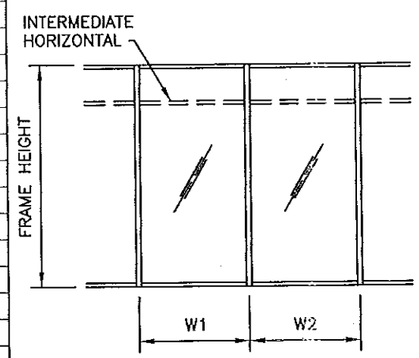

$$\text{WIDTH (W)} = \frac{\text{W1} + \text{W2}}{2}$$

MULLION AND JAMB ANCHOR LOAD CAPACITY (PSF)
FOR 1/4" MAX. SHIM

NOMINAL DIMS.		ANCHOR TYPE			NOMINAL DIMS.		ANCHOR TYPE		
		"A3"	"B3"	"C3"			"A3"	"B3"	"C3"
WIDTH (W)	FRAME HEIGHT	EXT. (+) INT. (-)	EXT. (+) INT. (-)	EXT. (+) INT. (-)	WIDTH (W)	FRAME HEIGHT	EXT. (+) INT. (-)	EXT. (+) INT. (-)	EXT. (+) INT. (-)
≤ 24		100.0	100.0	100.0	24		80.0	80.0	80.0
30		100.0	100.0	100.0	30		80.0	80.0	80.0
36		100.0	100.0	100.0	36		80.0	80.0	80.0
42		100.0	100.0	100.0	42	108	55.0	55.0	55.0
48	72	100.0	100.0	100.0	48		55.0	55.0	55.0
54		100.0	100.0	100.0	54		55.0	55.0	55.0
60		80.0	80.0	80.0	60		55.0	55.0	55.0
66		55.0	55.0	55.0	66		55.0	55.0	55.0
72		55.0	55.0	55.0	24		80.0	80.0	80.0
24		100.0	100.0	100.0	30		80.0	80.0	80.0
30		100.0	100.0	100.0	36		80.0	80.0	80.0
36		100.0	100.0	100.0	42	114	55.0	55.0	55.0
42		100.0	100.0	100.0	48		55.0	55.0	55.0
48	84	100.0	100.0	100.0	54		55.0	55.0	55.0
54		55.0	55.0	55.0	60		55.0	55.0	55.0
60		55.0	55.0	55.0	24		80.0	80.0	80.0
66		55.0	55.0	55.0	30		80.0	80.0	80.0
72		55.0	55.0	55.0	36		80.0	80.0	80.0
24		80.0	80.0	80.0	42	120	55.0	55.0	55.0
30		80.0	80.0	80.0	48		55.0	55.0	55.0
36		80.0	80.0	80.0	54		55.0	55.0	55.0
42		80.0	80.0	80.0	60		55.0	55.0	55.0
48	96	55.0	55.0	55.0	24		80.0	80.0	80.0
54		55.0	55.0	55.0	30	132	80.0	80.0	80.0
60		55.0	55.0	55.0	36		55.0	55.0	55.0
66		55.0	55.0	55.0	24	144	80.0	80.0	80.0
72		55.0	55.0	55.0	30		80.0	80.0	80.0

TYPICAL ANCHOR CLUSTERS

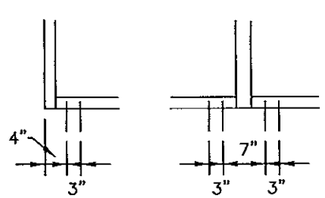

"A2", "B2", "C2"

ANCHOR TYPES: SEE SHEET 11 FOR DESCRIPTION

"A2" – (2) ANCHORS TYPE "A" AT EA. SIDE OF MULLION OR JAMB
"B2" – (2) ANCHORS TYPE "B" AT EA. SIDE OF MULLION OR JAMB
"C2" – (2) ANCHORS TYPE "C" AT EA. SIDE OF MULLION OR JAMB
"A3" – (3) ANCHORS TYPE "A" AT EA. SIDE OF MULLION OR JAMB
"B3" – (3) ANCHORS TYPE "B" AT EA. SIDE OF MULLION OR JAMB
"C3" – (3) ANCHORS TYPE "C" AT EA. SIDE OF MULLION OR JAMB

ALL OTHER ANCHORS TO BE SPACED AS PER ELEVATION

TYPICAL ANCHOR CLUSTERS

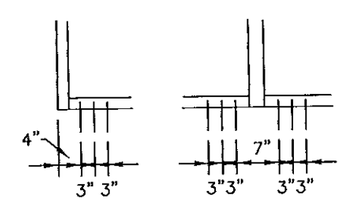

"A3", "B3", "C3"

STEP 4: ANCHOR LOAD CAPACITY AT ¼" MAX. SHIM SPACE

Trulite
GLASS & ALUMINUM SOLUTIONS™
http://www.trulite.com
800 FAIRWAY DRIVE, Suite 200
DEERFIELD BEACH, FL 33441
p. 800-432-8132 | f. 954-724-2083

PRODUCT:

IFG-5100
ALUM. STOREFRONT WINDOW WALL SYSTEM LARGE-MISSILE IMPACT

Resistor
BLAST & STORM PROTECTION™

REVN	DATE/REMARKS
1	3.28.14/REVISION

ENGINEER:
MCY ENGINEERING, INC.
GLAZING CONSULTANT
8501 SW 124 Ave. Ste. 205A
MIAMI, FL 33183
P: 305-271-0117
Email: MCY.Engineering@att.net
www.MCYEngineering.com

STAMP:
YIPING WANG, P.E.
FLORIDA REGISTRATION
PE #55983
C.A.N. 28677

APR 07 2014

PRODUCT CONTROL APPROVAL:

PRODUCT REVISED
as complying with the Florida Building Code
Acceptance No 14-0203.02
Expiration Date March 11, 2019
By Manuel Suez
Miami Dade Product Control

DRAWN: TRULITE	DRAWING No:
DATE: 03.26.14	6 OF 14
DWG: AD14-05	

MULLION AND JAMB ANCHOR LOAD CAPACITY (PSF)
FOR 3/8" MAX. SHIM

NOMINAL DIMS.		ANCHOR TYPE			NOMINAL DIMS.		ANCHOR TYPE		
		"D2"	"E2"	"F2"			"D2"	"E2"	"F2"
WIDTH (W)	FRAME HEIGHT	EXT. (+) INT. (-)	EXT. (+) INT. (-)	EXT. (+) INT. (-)	WIDTH (W)	FRAME HEIGHT	EXT. (+) INT. (-)	EXT. (+) INT. (-)	EXT. (+) INT. (-)
≤ 24	72	100.0	100.0	100.0	24	108	80.0	80.0	80.0
30		100.0	100.0	100.0	30		80.0	80.0	80.0
36		100.0	100.0	100.0	36		80.0	80.0	80.0
42		100.0	100.0	100.0	42		55.0	55.0	55.0
48		100.0	99.3	95.5	48		55.0	55.0	55.0
54		89.8	88.3	84.9	54		55.0	55.0	55.0
60		80.0	79.5	76.4	60		53.9	53.0	50.9
66		55.0	55.0	55.0	66		49.0	48.2	46.3
72		55.0	55.0	55.0	24	114	80.0	80.0	80.0
24	84	100.0	100.0	100.0	30		80.0	80.0	80.0
30		100.0	100.0	100.0	36		80.0	80.0	80.0
36		100.0	100.0	100.0	42		55.0	55.0	55.0
42		98.9	97.3	93.5	48		55.0	55.0	55.0
48		86.6	85.1	81.8	54		55.0	55.0	53.6
54		55.0	55.0	55.0	60		51.0	50.2	48.2
60		55.0	55.0	55.0	24	120	80.0	80.0	80.0
66		55.0	55.0	55.0	30		80.0	80.0	80.0
72		55.0	55.0	54.6	36		80.0	79.5	76.4
24	96	80.0	80.0	80.0	42		55.0	55.0	55.0
30		80.0	80.0	80.0	48		55.0	55.0	55.0
36		80.0	80.0	80.0	54		53.9	53.0	50.9
42		80.0	80.0	80.0	60		48.5	47.7	45.8
48		55.0	55.0	55.0	24	132	80.0	80.0	80.0
54		55.0	55.0	55.0	30		67.3	66.2	63.6
60		55.0	55.0	55.0	36		55.0	55.0	55.0
66		55.0	54.2	52.1	24	144	80.0	80.0	80.0
72		50.5	49.7	47.7	30		80.0	79.5	76.4

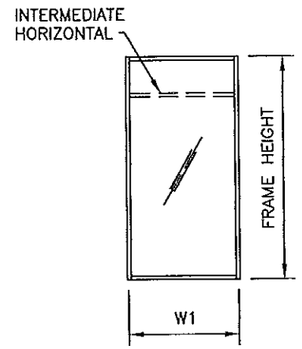

WIDTH (W) = $\frac{W1\ (JAMB)}{2}$

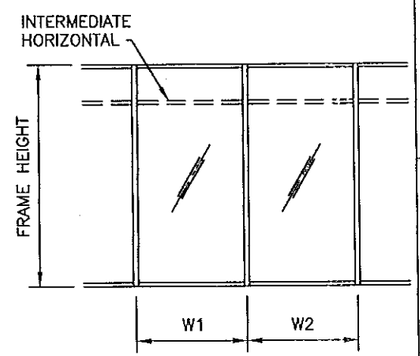

WIDTH (W) = $\frac{W1 + W2}{2}$

MULLION AND JAMB ANCHOR LOAD CAPACITY (PSF)
FOR 3/8" MAX. SHIM

NOMINAL DIMS.		ANCHOR TYPE			NOMINAL DIMS.		ANCHOR TYPE		
		"D3"	"E3"	"F3"			"D3"	"D3"	"F3"
WIDTH (W)	FRAME HEIGHT	EXT. (+) INT. (-)	EXT. (+) INT. (-)	EXT. (+) INT. (-)	WIDTH (W)	FRAME HEIGHT	EXT. (+) INT. (-)	EXT. (+) INT. (-)	EXT. (+) INT. (-)
24	72	100.0	100.0	100.0	24	108	80.0	80.0	80.0
30		100.0	100.0	100.0	30		80.0	80.0	80.0
36		100.0	100.0	100.0	36		80.0	80.0	80.0
42		100.0	100.0	100.0	42		55.0	55.0	55.0
48		100.0	100.0	100.0	48		55.0	55.0	55.0
54		100.0	100.0	100.0	54		55.0	55.0	55.0
60		80.0	80.0	80.0	60		55.0	55.0	55.0
66		55.0	55.0	55.0	66		55.0	55.0	55.0
72		55.0	55.0	55.0	24	114	80.0	80.0	80.0
24	84	100.0	100.0	100.0	30		80.0	80.0	80.0
30		100.0	100.0	100.0	36		80.0	80.0	80.0
36		100.0	100.0	100.0	42		55.0	55.0	55.0
42		100.0	100.0	100.0	48		55.0	55.0	55.0
48		100.0	100.0	100.0	54		55.0	55.0	55.0
54		55.0	55.0	55.0	60		55.0	55.0	55.0
60		55.0	55.0	55.0	24	120	80.0	80.0	80.0
66		55.0	55.0	55.0	30		80.0	80.0	80.0
72		55.0	55.0	55.0	36		80.0	80.0	80.0
24	96	80.0	80.0	80.0	42		55.0	55.0	55.0
30		80.0	80.0	80.0	48		55.0	55.0	55.0
36		80.0	80.0	80.0	54		55.0	55.0	55.0
42		80.0	80.0	80.0	60		55.0	55.0	55.0
48		55.0	55.0	55.0	24	132	80.0	80.0	80.0
54		55.0	55.0	55.0	30		80.0	80.0	80.0
60		55.0	55.0	55.0	36		55.0	55.0	55.0
66		55.0	55.0	55.0	24	144	80.0	80.0	80.0
72		55.0	55.0	55.0	30		80.0	80.0	80.0

TYPICAL ANCHOR CLUSTERS

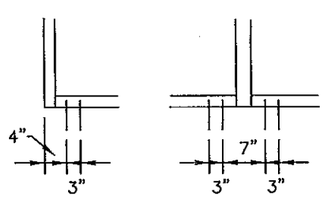

"D2", "E2", "F2"

ANCHOR TYPES: SEE SHEET 11 FOR DESCRIPTION

"D2" – (2) ANCHORS TYPE "D" AT EA. SIDE OF MULLION OR JAMB
"E2" – (2) ANCHORS TYPE "E" AT EA. SIDE OF MULLION OR JAMB
"F2" – (2) ANCHORS TYPE "F" AT EA. SIDE OF MULLION OR JAMB
"D3" – (3) ANCHORS TYPE "D" AT EA. SIDE OF MULLION OR JAMB
"E3" – (3) ANCHORS TYPE "E" AT EA. SIDE OF MULLION OR JAMB
"F3" – (3) ANCHORS TYPE "F" AT EA. SIDE OF MULLION OR JAMB

ALL OTHER ANCHORS TO BE SPACED AS PER ELEVATION

TYPICAL ANCHOR CLUSTERS

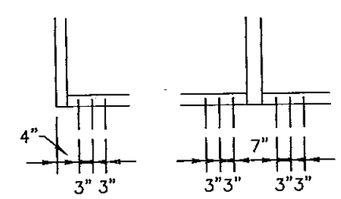

"D3", "E3", "F3"

STEP 4: ANCHOR LOAD CAPACITY AT 3/8" MAX. SHIM SPACE

Trulite
GLASS & ALUMINUM SOLUTIONS™
http://www.trulite.com
800 FAIRWAY DRIVE, Suite 200
DEERFIELD BEACH, FL 33441
p. 800-432-8132 | f. 954-724-2083

PRODUCT:

IFG-5100
ALUM. STOREFRONT WINDOW WALL SYSTEM LARGE-MISSILE IMPACT

Resistor
BLAST & STORM PROTECTION™

REVN	DATE/REMARKS
1	3.28.14/REVISION

ENGINEER:
MCY ENGINEERING, INC.
GLAZING CONSULTANT
8501 SW 124 Ave. Ste. 205A
MIAMI, FL 33183
P: 305-271-0117
Email: MCY.Engineering@att.net
www.MCYEngineering.com

STAMP:
YIPING WANG, P.E.
FLORIDA REGISTRATION
PE #55983
C.A.N. 28677

APR 07 2014

PRODUCT CONTROL APPROVAL:

PRODUCT REVISED
as complying with the Florida Building Code
Acceptance No 14-0203.03
Expiration Date March 11, 2019
By Manuel Fuez
Miami Dade Product Control

DRAWN: TRULITE	DRAWING No:
DATE: 03.26.14	7 OF 14
DWG: AD14-05	

DOOR JAMB ANCHOR LOAD CAPACITY (PSF) FOR 1/4" MAX. SHIM				
NOMINAL DIMS.		ANCHOR TYPE		
WIDTH (W)	FRAME HEIGHT	"A2" EXT. (+) INT. (-)	"B2" EXT. (+) INT. (-)	"C2" EXT. (+) INT. (-)
≤ 24	84	80.0	80.0	80.0
30		80.0	80.0	80.0
36		80.0	80.0	80.0
42		80.0	80.0	79.0
48		80.0	80.0	69.1
54		80.0	80.0	61.5
60		76.3	80.0	55.3
66		69.4	80.0	50.3
72		63.6	80.0	46.1
24	96	80.0	80.0	80.0
30		80.0	80.0	80.0
36		80.0	80.0	80.0
42		80.0	80.0	69.1
48		80.0	80.0	60.5
54		74.2	80.0	53.8
60		66.8	80.0	48.4
66		60.7	80.0	44.0
24	108	80.0	80.0	80.0
30		80.0	80.0	80.0
36		80.0	80.0	71.7
42		80.0	80.0	61.5
48		74.2	80.0	53.8
54		66.0	80.0	47.8
60		59.4	80.0	43.0
24	114	80.0	80.0	80.0
30		80.0	80.0	80.0
36		80.0	80.0	67.9
42		80.0	80.0	58.2
48		70.3	80.0	50.9
54		62.5	80.0	45.3
24	120	80.0	80.0	80.0
30		80.0	80.0	77.4
36		80.0	80.0	64.5
42		76.3	80.0	55.3
48		66.8	80.0	48.4
54		59.4	80.0	43.0

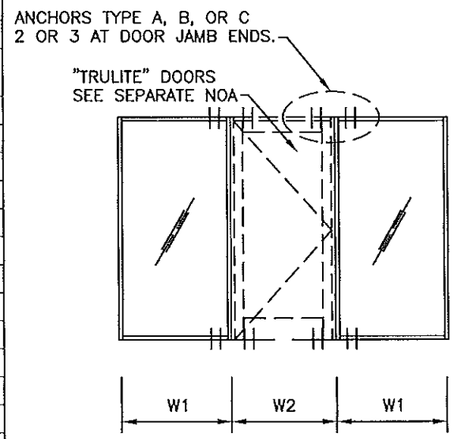

WIDTH (W) = $\frac{W1 + W2}{2}$ (MULLION)

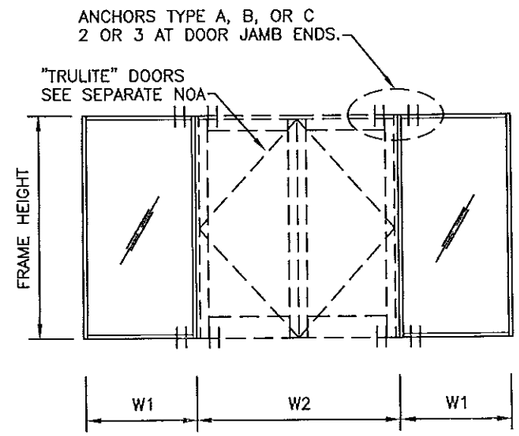

WIDTH (W) = $\frac{W1}{2} + \frac{W2}{4}$ (MULLION)

SEE DOOR NOA FOR ADDITIONAL ANCHORING REQIREMENTS

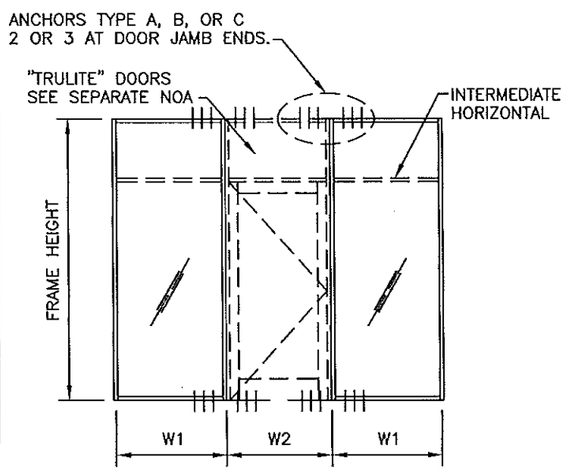

WIDTH (W) = $\frac{W1 + W2}{2}$ (MULLION)

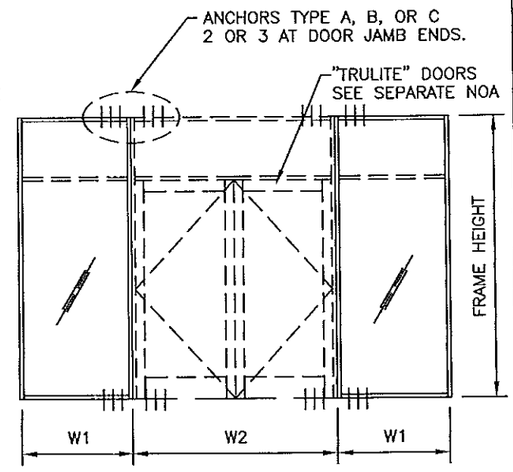

WIDTH (W) = $\frac{W1 + W2}{2}$ (MULLION)

DOOR JAMB ANCHOR LOAD CAPACITY (PSF) FOR 1/4" MAX. SHIM				
NOMINAL DIMS.		ANCHOR TYPE		
WIDTH (W)	FRAME HEIGHT	"A3" EXT. (+) INT. (-)	"B3" EXT. (+) INT. (-)	"C3" EXT. (+) INT. (-)
≤ 24	84	80.0	80.0	80.0
30		80.0	80.0	80.0
36		80.0	80.0	80.0
42		80.0	80.0	80.0
48		80.0	80.0	80.0
54		80.0	80.0	80.0
60		80.0	80.0	80.0
66		80.0	80.0	75.4
72		80.0	80.0	69.1
24	96	80.0	80.0	80.0
30		80.0	80.0	80.0
36		80.0	80.0	80.0
42		80.0	80.0	80.0
48		80.0	80.0	80.0
54		80.0	80.0	80.0
60		80.0	80.0	72.6
66		80.0	80.0	66.0
24	108	80.0	80.0	80.0
30		80.0	80.0	80.0
36		80.0	80.0	80.0
42		80.0	80.0	80.0
48		80.0	80.0	80.0
54		80.0	80.0	71.7
60		80.0	80.0	64.5
24	114	80.0	80.0	80.0
30		80.0	80.0	80.0
36		80.0	80.0	80.0
42		80.0	80.0	80.0
48		80.0	80.0	76.4
54		80.0	80.0	67.9
24	120	80.0	80.0	80.0
30		80.0	80.0	80.0
36		80.0	80.0	80.0
42		80.0	80.0	80.0
48		80.0	80.0	72.6
54		80.0	80.0	64.5

STEP 4: ANCHOR LOAD CAPACITY AT ¼" MAX. SHIM SPACE

Trulite
GLASS & ALUMINUM SOLUTIONS™
http://www.trulite.com
800 FAIRWAY DRIVE, Suite 200
DEERFIELD BEACH, FL 33441
p. 800-432-8132 | f. 954-724-2083

PRODUCT:

IFG-5100
ALUM. STOREFRONT WINDOW WALL SYSTEM LARGE-MISSILE IMPACT

Resistor
BLAST & STORM PROTECTION™

REVN	DATE/REMARKS
1	3.28.14/REVISION

ENGINEER:
MCY ENGINEERING, INC.
GLAZING CONSULTANT
8501 SW 124 Ave. Ste. 205A
MIAMI, FL 33183
P: 305-271-0117
Email: MCY.Engineering@att.net
www.MCYEngineering.com

STAMP:

YIPING WANG, P.E.
FLORIDA REGISTRATION
PE #55983
C.A.N. 28677

APR 07 2014

PRODUCT CONTROL APPROVAL:

PRODUCT REVISED
as complying with the Florida Building Code
Acceptance No 14-0203.09
Expiration Date March 11, 2019
By Manuel Fuentes
Miami-Dade Product Control

DRAWN: TRULITE
DATE: 03.26.14
DWG: AD14-05

DRAWING No:
8 OF 14

DOOR JAMB ANCHOR LOAD CAPACITY (PSF) FOR 3/8" MAX. SHIM				
NOMINAL DIMS.		ANCHOR TYPE		
WIDTH (W)	FRAME HEIGHT	"D2" EXT. (+) INT. (-)	"E2" EXT. (+) INT. (-)	"F2" EXT. (+) INT. (-)
≤ 24	84	80.0	80.0	80.0
30		80.0	80.0	80.0
36		80.0	80.0	80.0
42		80.0	80.0	80.0
48		80.0	80.0	80.0
54		77.0	75.7	72.7
60		69.3	68.1	65.5
66		63.0	61.9	59.5
72		57.7	56.8	54.6
24	96	80.0	80.0	80.0
30		80.0	80.0	80.0
36		80.0	80.0	80.0
42		80.0	80.0	80.0
48		75.8	74.5	71.6
54		67.3	66.2	63.6
60		60.6	59.6	57.3
66		55.1	54.2	52.1
24	108	80.0	80.0	80.0
30		80.0	80.0	80.0
36		80.0	80.0	80.0
42		77.0	75.7	72.7
48		67.3	66.2	63.6
54		59.9	58.9	56.6
60		53.9	53.0	50.9
24	114	80.0	80.0	80.0
30		80.0	80.0	80.0
36		80.0	80.0	80.0
42		72.9	71.7	68.9
48		63.8	62.7	60.3
54		56.7	55.8	53.6
24	120	80.0	80.0	80.0
30		80.0	80.0	80.0
36		80.0	79.5	76.4
42		69.3	68.1	65.5
48		60.6	59.6	57.3
54		53.9	53.0	50.9

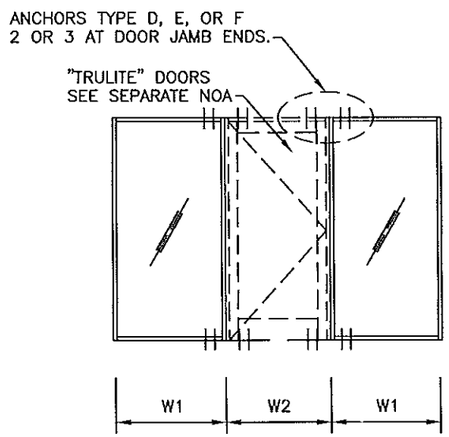

WIDTH (W) = $\frac{W1 + W2}{2}$ (MULLION)

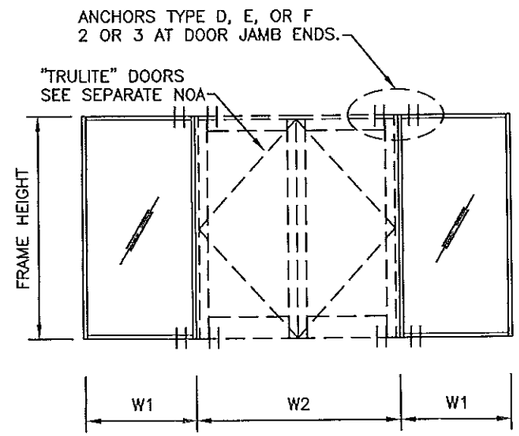

WIDTH (W) = $\frac{W1}{2} + \frac{W2}{4}$ (MULLION)

SEE DOOR NOA FOR ADDITIONAL ANCHORING REQIREMENTS

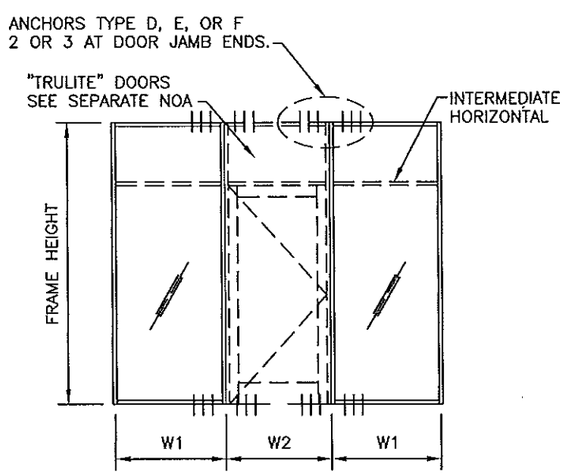

WIDTH (W) = $\frac{W1 + W2}{2}$ (MULLION)

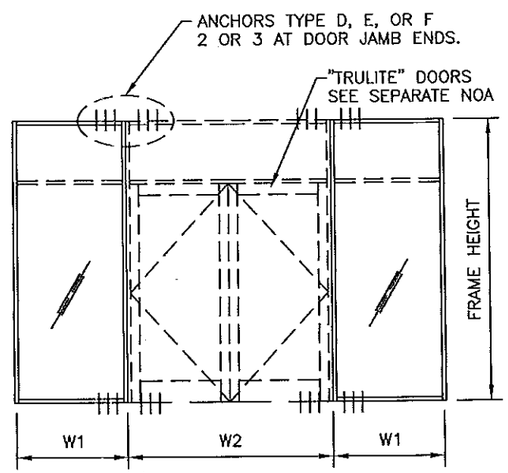

WIDTH (W) = $\frac{W1 + W2}{2}$ (MULLION)

DOOR JAMB ANCHOR LOAD CAPACITY (PSF) FOR 3/8" MAX. SHIM				
NOMINAL DIMS.		ANCHOR TYPE		
WIDTH (W)	FRAME HEIGHT	"D3" EXT. (+) INT. (-)	"E3" EXT. (+) INT. (-)	"F3" EXT. (+) INT. (-)
≤ 24	84	80.0	80.0	80.0
30		80.0	80.0	80.0
36		80.0	80.0	80.0
42		80.0	80.0	80.0
48		80.0	80.0	80.0
54		80.0	80.0	80.0
60		80.0	80.0	80.0
66		80.0	80.0	80.0
72		80.0	80.0	80.0
24	96	80.0	80.0	80.0
30		80.0	80.0	80.0
36		80.0	80.0	80.0
42		80.0	80.0	80.0
48		80.0	80.0	80.0
54		80.0	80.0	80.0
60		80.0	80.0	80.0
66		80.0	80.0	78.1
24	108	80.0	80.0	80.0
30		80.0	80.0	80.0
36		80.0	80.0	80.0
42		80.0	80.0	80.0
48		80.0	80.0	80.0
54		80.0	80.0	80.0
60		80.0	79.5	76.4
24	114	80.0	80.0	80.0
30		80.0	80.0	80.0
36		80.0	80.0	80.0
42		80.0	80.0	80.0
48		80.0	80.0	80.0
54		80.0	80.0	80.0
24	120	80.0	80.0	80.0
30		80.0	80.0	80.0
36		80.0	80.0	80.0
42		80.0	80.0	80.0
48		80.0	80.0	80.0
54		80.0	79.5	76.4

STEP 4: ANCHOR LOAD CAPACITY AT ⅜" MAX. SHIM SPACE

Trulite
GLASS & ALUMINUM SOLUTIONS™
http://www.trulite.com
800 FAIRWAY DRIVE, Suite 200
DEERFIELD BEACH, FL 33441
p. 800-432-8132 | f. 954-724-2083

PRODUCT:

IFG-5100
ALUM. STOREFRONT WINDOW WALL SYSTEM LARGE-MISSILE IMPACT

Resistor
BLAST & STORM PROTECTION™

REVN	DATE/REMARKS
1	3.28.14/REVISION

ENGINEER:
MCY ENGINEERING, INC.
GLAZING CONSULTANT
8501 SW 124 Ave. Ste. 205A
MIAMI, FL 33183
P: 305-271-0117
Email: MCY.Engineering@att.net
www.MCYEngineering.com

STAMP:
YIPING WANG, P.E.
FLORIDA REGISTRATION
PE #55983
C.A.N. 28677
APR 07 2014

PRODUCT CONTROL APPROVAL:
PRODUCT REVISED
as complying with the Florida Building Code
Acceptance No 14-0203.02
Expiration Date April 11, 2019
By Manuel Perez
Miami Dade Product Control

DRAWN: TRULITE
DATE: 03.26.14
DWG: AD14-05

DRAWING No:
9 OF 14

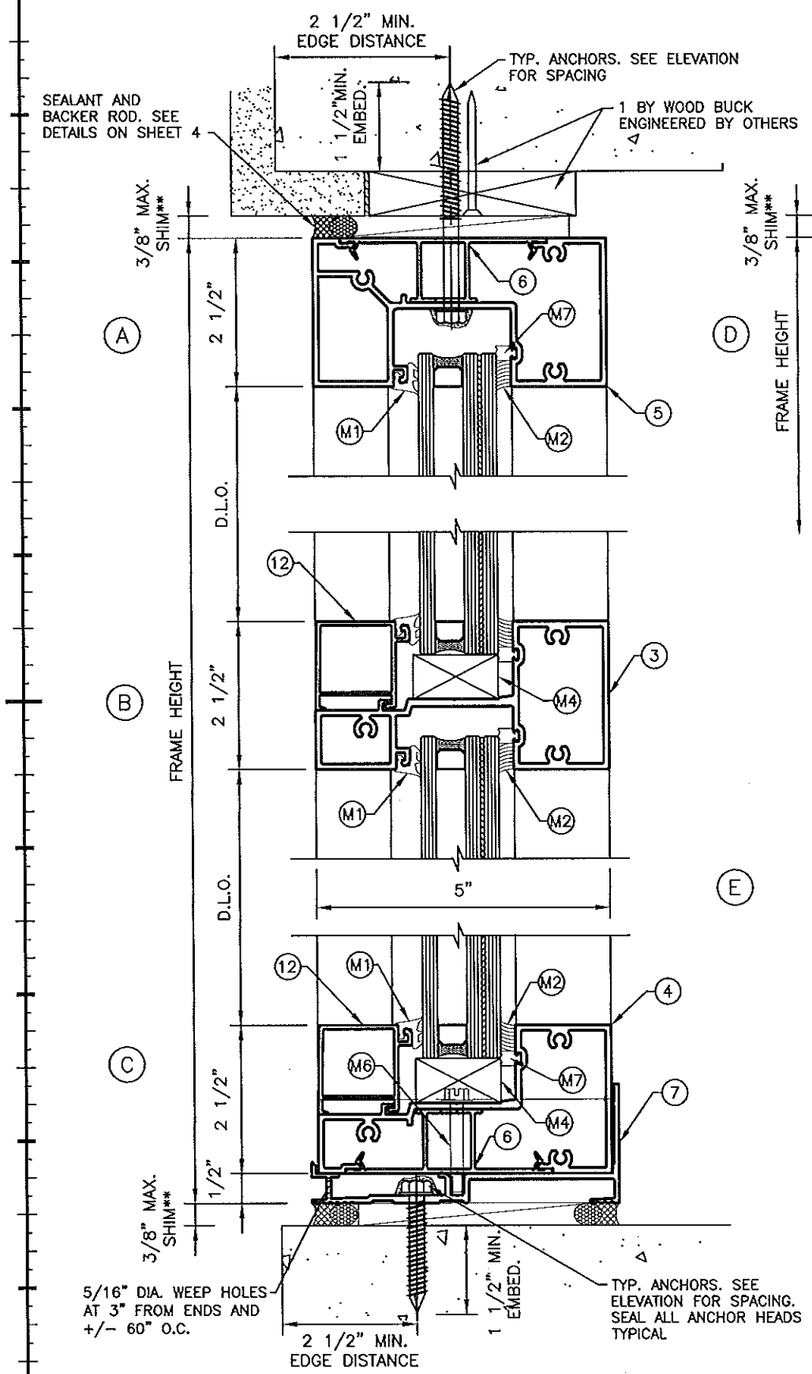

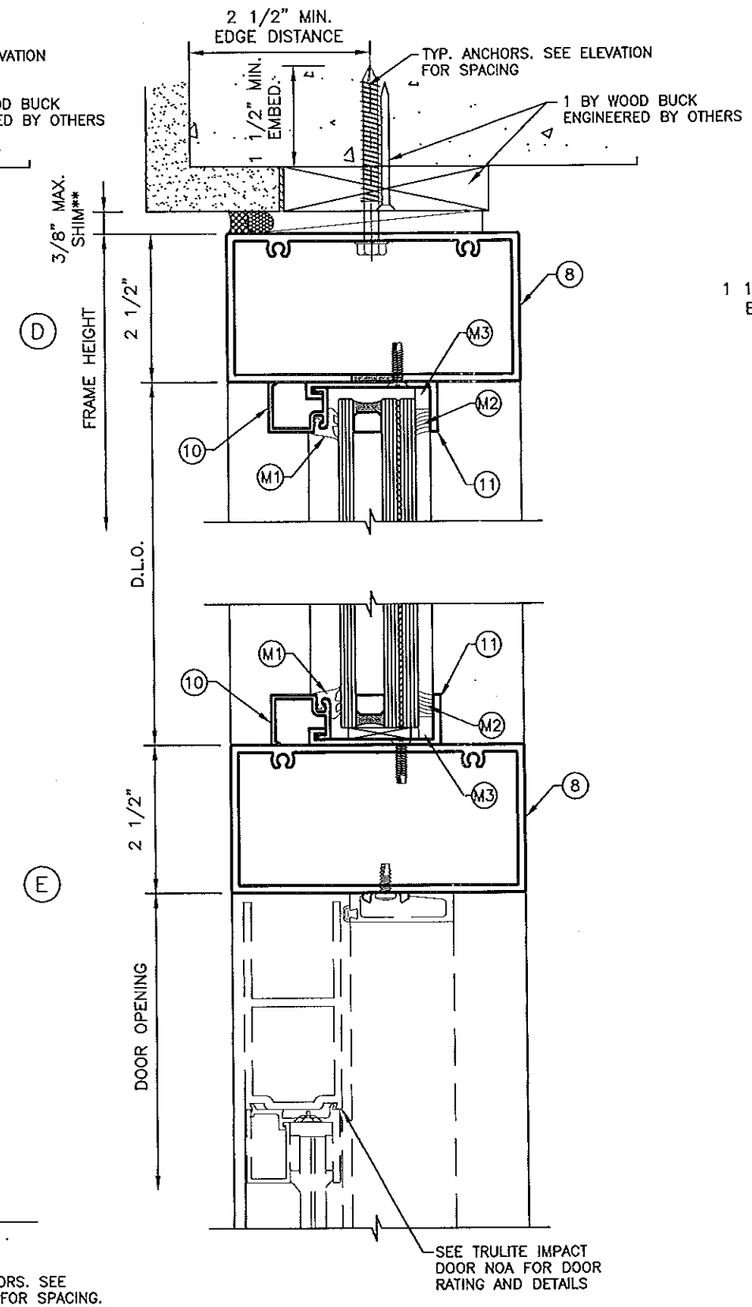

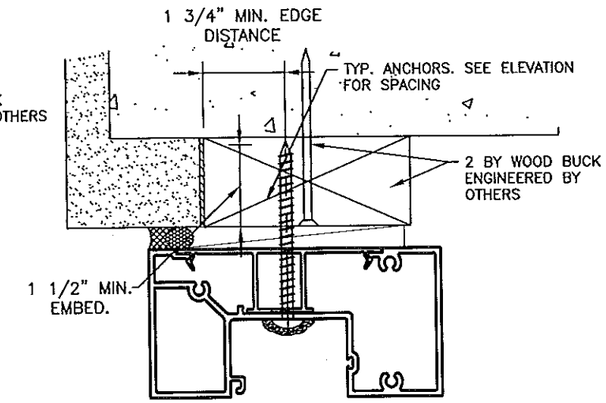

ANCHOR TYPE – C

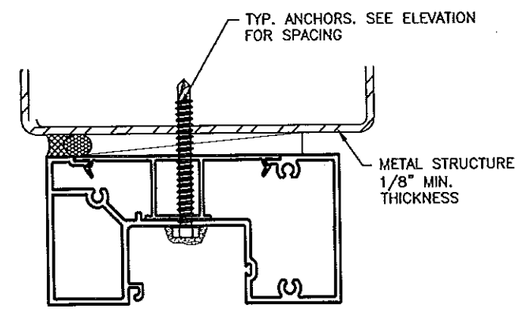

ANCHOR TYPE – B

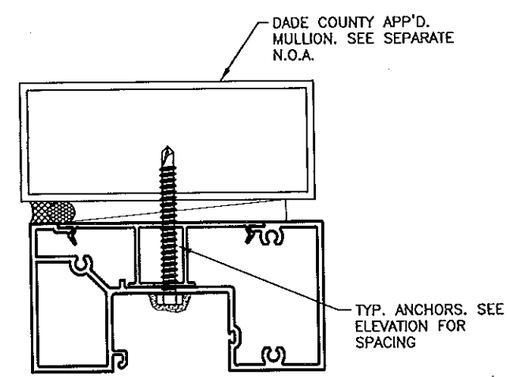

ANCHOR TYPE – B

** REFER TO CHARTS FOR DESIGN LOAD V.S. MAX. SHIM.

Trulite
GLASS & ALUMINUM SOLUTIONS™
http://www.trulite.com
800 FAIRWAY DRIVE, Suite 200
DEERFIELD BEACH, FL 33441
p. 800-432-8132 | f. 954-724-2083

PRODUCT:

IFG-5100
ALUM. STOREFRONT WINDOW WALL SYSTEM LARGE-MISSILE IMPACT

Resistor
BLAST & STORM PROTECTION™

REVN	DATE/REMARKS
1	3.28.14/REVISION

ENGINEER:
MCY ENGINEERING, INC.
GLAZING CONSULTANT
8501 SW 124 Ave. Ste. 205A
MIAMI, FL 33183
P: 305-271-0117
Email: MCY.Engineering@att.net
www.MCYEngineering.com

STAMP:

YIPING WANG, P.E.
FLORIDA REGISTRATION
PE #55983
C.A.N. 28677

APR 07 2014

PRODUCT CONTROL APPROVAL:

PRODUCT REVISED
as complying with the Florida Building Code
Acceptance No 14-0203.09
Expiration Date March 11, 2019
By Manuel Perez
Miami Dade Product Control

DRAWN: TRULITE	DRAWING No:
DATE: 03.26.14	10 OF 14
DWG: AD14-05	

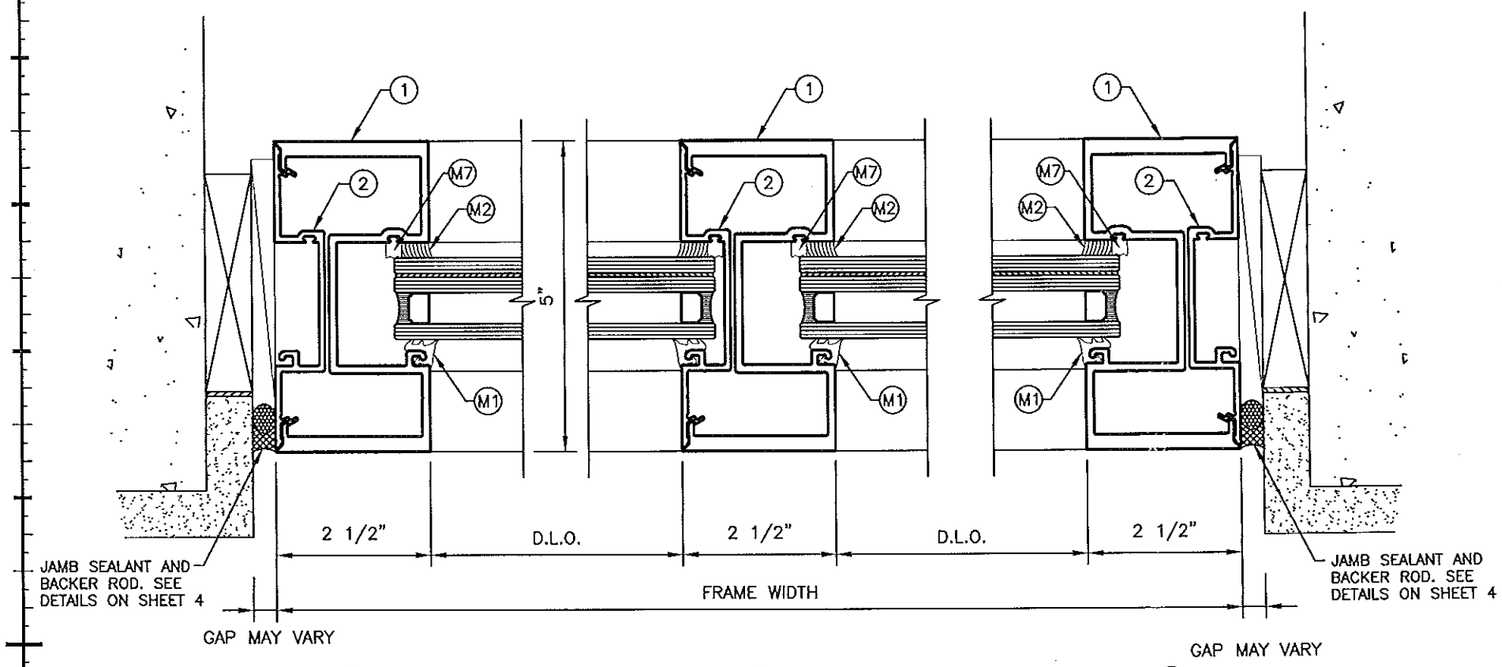

F G H

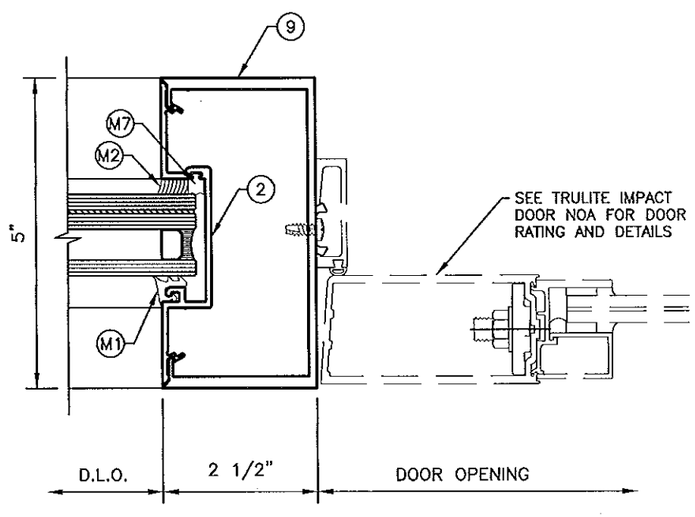

I

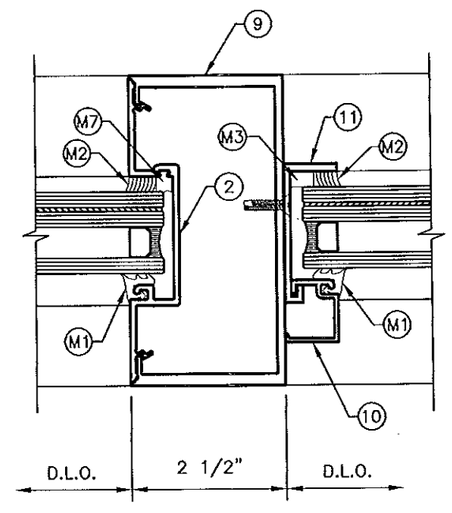

J

WOOD BUCKS NOT BY TRULITE MUST SUPPORT LOADS IMPOSED BY GLAZING SYSTEM AND TRANSFER THEM TO THE BUILDING STRUCTURE.

TYPICAL ANCHORS:

SEE ELEVATIONS FOR SPACING

TYPE "A"–1/4" TAPCONS BY 'ITW'

DIRECTLY INTO 3000 PSI MIN. CONCRETE
1 1/2" MIN. EMBED. INTO CONC.

TYPE "B"–#14 SMS OR 1/4" SELF DRILLING SCREWS

INTO METAL STRUCTURES
(STEEL OR ALUM. 1/8" MIN. THICK.)

STEEL: Fy – 36 KSI MIN.
ALUMINUM: 6063–T5 MIN.
(STEEL IN CONTACT WITH ALUM. TO BE PLATED OR PAINTED)

TYPE "C"– 1/4" TAPCONS BY 'ITW'

INTO BY WOOD BUCKS OR WOOD STRUCTURES
1 1/2" MIN. WOOD PENETRATION

TYPE "D"–1/4" ULTRACONS BY "ELCO"

DIRECTLY INTO 3000 PSI MIN. CONCRETE
1 1/2" MIN. EMBED. INTO CONC.

TYPE "E"– 5/16" SELF DRILLING SCREWS

INTO METAL STRUCTURES
(STEEL OR ALUM. 1/8" MIN. THICK.)

STEEL: Fy – 36 KSI MIN.
ALUMINUM: 6063–T5 MIN.
(STEEL IN CONTACT WITH ALUM. TO BE PLATED OR PAINTED)

TYPE "F"– 1/4" ULTRACONS BY "ELCO"

INTO BY WOOD BUCKS OR WOOD STRUCTURES
1 1/2" MIN. WOOD PENETRATION

TYPICAL EDGE DISTANCE

INTO CONC. OR MASONRY = 2 1/2" MIN.
INTO WOOD STRUCTURE = 1 3/4" MIN.
INTO METAL STRUCTURE = 3/4" MIN.

Trulite
GLASS & ALUMINUM SOLUTIONS™
http://www.trulite.com
800 FAIRWAY DRIVE, Suite 200
DEERFIELD BEACH, FL 33441
p. 800-432-8132 | f. 954-724-2083

PRODUCT:

IFG-5100
ALUM. STOREFRONT WINDOW WALL SYSTEM LARGE-MISSILE IMPACT

Resistor
BLAST & STORM PROTECTION™

REVN	DATE/REMARKS
1	3.28.14/REVISION

ENGINEER:
MCY ENGINEERING, INC.
GLAZING CONSULTANT
8501 SW 124 Ave. Ste. 205A
MIAMI, FL 33183
P: 305-271-0117
Email: MCY.Engineering@att.net
www.MCYEngineering.com

STAMP:
YIPING WANG, P.E.
FLORIDA REGISTRATION
PE #55983
C.A.N. 28677
APR 07 2014

PRODUCT CONTROL APPROVAL:

PRODUCT REVISED
as complying with the Florida Building Code
Acceptance No 14-0203.02
Expiration Date March 11, 2019
By Manuel Cruz
Miami Dade Product Control

DRAWN: TRULITE	DRAWING No:
DATE: 03.26.14	11 OF 14
DWG: AD14–05	

AGA–1047

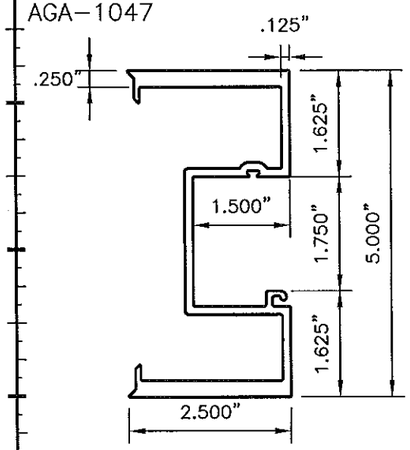

① 51501: MULLION–VERTICAL

AGA–1048

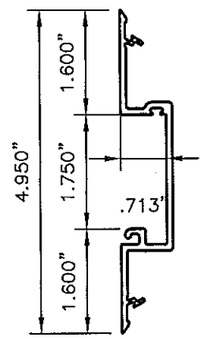

② 51506: POCKET FILLER

AGA–1049

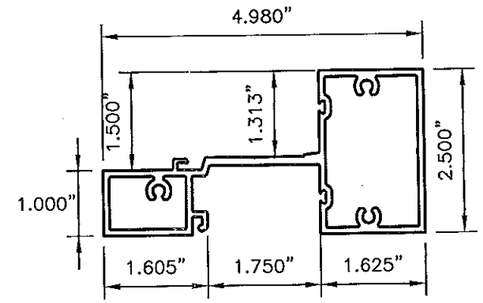

③ 51504: INT. HORIZONTAL

AGA–1050

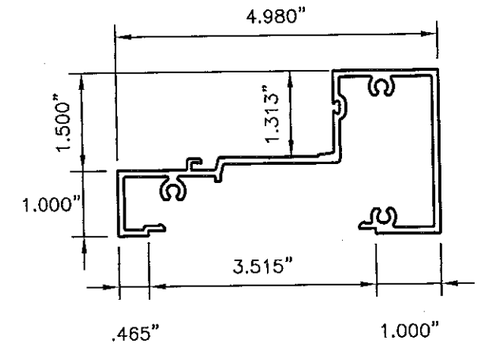

④ 51502: SILL/HEAD HORIZONTAL

AGA–1051

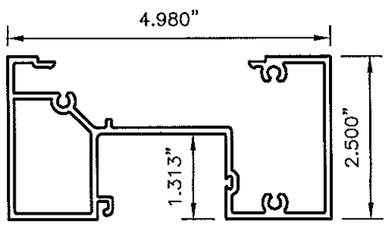

⑤ 51500: HEAD HORIZONTAL

AGA–1052

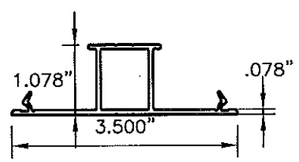

⑥ 51508: HEAD/SILL FLAT FILLER

AGA–1053

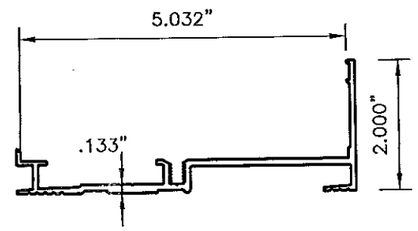

⑦ 51505: SUB–SILL

AGA–1054

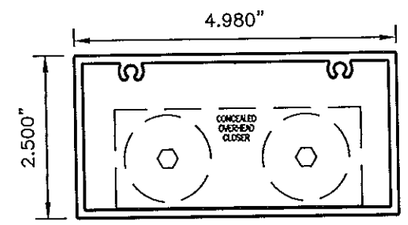

⑧ 51513: DOOR HEADER

AGA–999

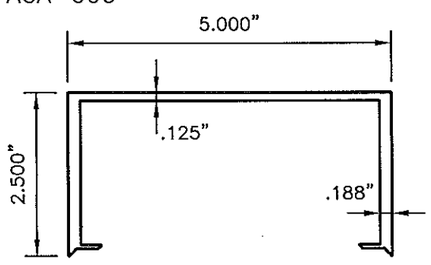

⑨ 50512: DOOR JAMB

AGA–1055

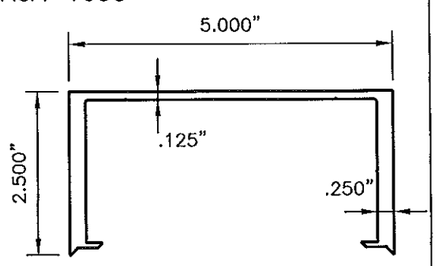

⑨A 51512: DOOR JAMB

AGA–790

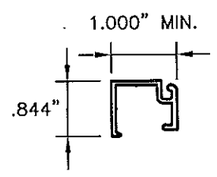

⑩ 3009: LITE STOP

AGA–1022

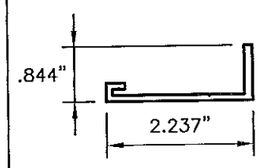

⑪ 3108: ADAPTOR

AGA–1058

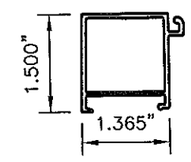

⑫ 51503: GLASS STOP

Trulite
GLASS & ALUMINUM SOLUTIONS™
http://www.trulite.com
800 FAIRWAY DRIVE, Suite 200
DEERFIELD BEACH, FL 33441
p. 800-432-8132 | f. 954-724-2083

PRODUCT:

IFG-5100
ALUM. STOREFRONT WINDOW WALL SYSTEM LARGE-MISSILE IMPACT

Resistor
BLAST & STORM PROTECTION™

REVN	DATE/REMARKS
1	3.28.14/REVISION

ENGINEER:
MCY ENGINEERING, INC.
GLAZING CONSULTANT
8501 SW 124 Ave. Ste. 205A
MIAMI, FL 33183
P: 305-271-0117
Email: MCY.Engineering@att.net
www.MCYEngineering.com

STAMP:
YIPING WANG, P.E.
FLORIDA REGISTRATION
PE #55983
C.A.N. 28677
APR 07 2014

PRODUCT CONTROL APPROVAL:

PRODUCT REVISED
as complying with the Florida Building Code
Acceptance No 14-0203.02
Expiration Date March 11, 2019
By
Miami Dade Product Control

DRAWN: TRULITE	DRAWING No:
DATE: 03.26.14	12 OF 14
DWG: AD14–05	

BILL OF MATERIALS

ITEM NO.	PART NO.	DESCRIPTION	MATERIAL	SUPPLIER/REMARKS	
1	51501	MULLION–VERTICAL	6063–T6	TRULITE	AGA–1047
2	51506	POCKET FILLER	6063–T6	TRULITE	AGA–1048
3	51504	INT. HORIZONTAL	6063–T6	TRULITE	AGA–1049
4	51502	SILL/HEAD HORIZONTAL	6063–T6	TRULITE	AGA–1050
5	51500	HEAD HORIZONTAL	6063–T6	TRULITE	AGA–1051
6	51508	HEAD & SILL FILLER	6063–T5	TRULITE	AGA–1052
7	51505	STARTER SILL	6063–T5	TRULITE	AGA–1053
8	51513	DOOR HEADER	6063–T6	TRULITE	AGA–1054
9	50512	DOOR JAMB	6063–T6	TRULITE	AGA–999
9A	51512	DOOR JAMB (OPTION)	6063–T6	TRULITE	AGA–1055
10	3009	FIXED LITE STOP	6063–T5	TRULITE	AGA–790/AGA–1056
11	3108	GLAZING ADAPTOR	6063–T5	TRULITE	AGA–1022/AGA–1057
12	51503	GLASS STOP	6063–T5	TRULITE	AGA–1058
M1	H–63	WEDGE GASKET	EPDM	---	
M2	DC–995	STRUCT'L SILICONE SEALANT	SILICONE	DOW CORNING	
	SSG–4000	STRUCT'L SILICONE SEALANT	SILICONE	G.E.	
		STRUCT'L SILICONE SEALANT	SILICONE	TREMCO	
M3	V2100	VINYL FOAM TAPE 0.375"x0.250"	FOAM	NORTON	
M4	H62K	0.75 THK x1.375 SETTING BLOCK	EPDM	---	
M5	H62F	0.25 THK x1.375 SETTING BLOCK	EPDM	---	
M6	S30	#12 x 1 ½" LG PPH MACH.SCW	S/S	INLINE WITH STARTER SILL ANCHOR	
M7	H60	BACKING GASKET		---	
M8	-----	3/8" X 4" FLAT STEEL REINFORCING	A36 STEEL	FULL HEIGHT DOOR JAMB REINFORCING	

Trulite
GLASS & ALUMINUM SOLUTIONS™
http://www.trulite.com
800 FAIRWAY DRIVE, Suite 200
DEERFIELD BEACH, FL 33441
p. 800-432-8132 | f. 954-724-2083

PRODUCT:

IFG-5100
ALUM. STOREFRONT WINDOW WALL SYSTEM LARGE-MISSILE IMPACT

Resistor
BLAST & STORM PROTECTION™

REVN	DATE/REMARKS
1	3.28.14/REVISION

ENGINEER:
MCY ENGINEERING, INC.
GLAZING CONSULTANT
8501 SW 124 Ave. Ste. 205A
MIAMI, FL 33183
P: 305-271-0117
Email: MCY.Engineering@att.net
www.MCYEngineering.com

STAMP:
YIPING WANG, P.E.
FLORIDA REGISTRATION
PE #55983
C.A.N. 28677
APR 07 2014

PRODUCT CONTROL APPROVAL:

PRODUCT REVISED
as complying with the Florida Building Code
Acceptance No 14-0203.02
Expiration Date March 11, 2019
By Manuel Perez
Miami Dade Product Control

DRAWN: TRULITE	DRAWING No:
DATE: 03.26.14	13 OF 14
DWG: AD14–05	

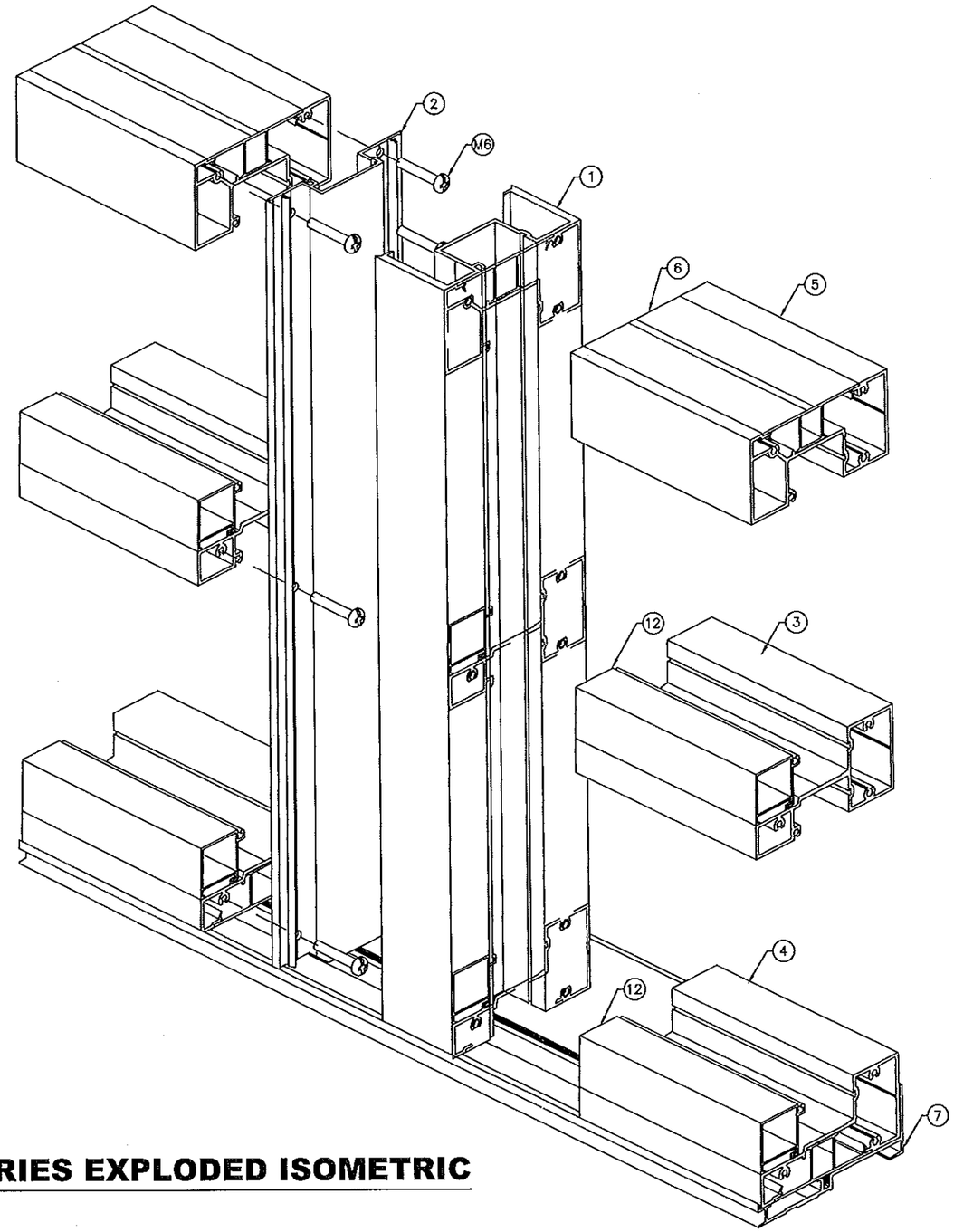

5100 SERIES EXPLODED ISOMETRIC

Trulite
GLASS & ALUMINUM SOLUTIONS™
http://www.trulite.com
800 FAIRWAY DRIVE, Suite 200
DEERFIELD BEACH, FL 33441
p. 800-432-8132 | f. 954-724-2083

PRODUCT:

IFG-5100
ALUM. STOREFRONT
WINDOW WALL SYSTEM
LARGE-MISSILE IMPACT

Resistor
BLAST & STORM PROTECTION™

REVN	DATE/REMARKS
1	3.28.14/REVISION

ENGINEER:
MCY ENGINEERING, INC.
GLAZING CONSULTANT
8501 SW 124 Ave. Ste. 205A
MIAMI, FL 33183
P: 305-271-0117
Email: MCY.Engineering@att.net
www.MCYEngineering.com

STAMP:

YIPING WANG, P.E.
FLORIDA REGISTRATION
PE #55983
C.A.N. 28677

APR 07 2014

PRODUCT CONTROL APPROVAL:

PRODUCT REVISED
as complying with the Florida
Building Code
Acceptance No 14-0203.02
Expiration Date March 11, 2019
By
Miami Dade Product Control

DRAWN: TRULITE	DRAWING No:
DATE: 03.26.14	14 OF 14
DWG: AD14-05	