MIAMI-DADE COUNTY
PRODUCT CONTROL SECTION
11805 SW 26 Street, Room 208
Miami, Florida 33175-2474
T (786) 315-2590 F (786) 315-2599
www.miamidade.gov/economy

DEPARTMENT OF REGULATORY AND ECONOMIC RESOURCES (RER)
BOARD AND CODE ADMINISTRATION DIVISION

NOTICE OF ACCEPTANCE (NOA)

Nan Ya Plastics Corporation USA
8989 North Loop East, Suite 800
Houston, TX 77029

SCOPE:

This NOA is being issued under the applicable rules and regulations governing the use of construction materials. The documentation submitted has been reviewed and accepted by Miami-Dade County RER -Product Control Section to be used in Miami Dade County and other areas where allowed by the Authority Having Jurisdiction (AHJ).

This NOA shall not be valid after the expiration date stated below. The Miami-Dade County Product Control Section (In Miami Dade County) and/or the AHJ (in areas other than Miami Dade County) reserve the right to have this product or material tested for quality assurance purposes. If this product or material fails to perform in the accepted manner, the manufacturer will incur the expense of such testing and the AHJ may immediately revoke, modify, or suspend the use of such product or material within their jurisdiction. RER reserves the right to revoke this acceptance, if it is determined by Miami-Dade County Product Control Section that this product or material fails to meet the requirements of the applicable building code.

This product is approved as described herein, and has been designed to comply with the Florida Building Code, including the High Velocity Hurricane Zone.

DESCRIPTION: Series "Distinction" Fiberglass Outswing glazed Doors w/wo Sidelites – LMI

APPROVAL DOCUMENT: Drawing No. **NAN0011 Rev D**, titled "Distinction Double Impact Entry O.S. w/ sidelite", sheets 1 through 10 of 10, dated 04/21/08 and last revised on 02-26-14, prepared by PTC, LLC, signed and sealed by Robert J. Amoruso, P.E., bearing the Miami-Dade County Product Control Revision stamp with the Notice of Acceptance number and expiration date by the Miami-Dade County Product Control Section.

MISSILE IMPACT RATING: Large and Small Missile Impact.

Limitations:

1. Full length wood reinforcements item 17, 18 & 20 at lock-stiles are required.
2. 1x or 2x buck to be properly secured to sustain imposed load and to be reviewed by building Official.

LABELING: Each unit shall bear a permanent label with the manufacturer's name or logo, city, state and series and following statement: "Miami-Dade County Product Control Approved", unless otherwise noted herein.

RENEWAL of this NOA shall be considered after a renewal application has been filed and there has been no change in the applicable building code negatively affecting the performance of this product.

TERMINATION of this NOA will occur after the expiration date or if there has been a revision or change in the materials, use, and/or manufacture of the product or process. Misuse of this NOA as an endorsement of any product, for sales, advertising or any other purposes shall automatically terminate this NOA. Failure to comply with any section of this NOA shall be cause for termination and removal of NOA.

ADVERTISEMENT: The NOA number preceded by the words Miami-Dade County, Florida, and followed by the expiration date may be displayed in advertising literature. If any portion of the NOA is displayed, then it shall be done in its entirety.

INSPECTION: A copy of this entire NOA shall be provided to the user by the manufacturer or its distributors and shall be available for inspection at the job site at the request of the Building Official.

This NOA **revises & renews** NOA # **12-0612.02** consists of this page 1 and evidence page E-1 and E-2, as well as approval document mentioned above.

The submitted documentation was reviewed by **Ishaq I. Chanda, P.E.**

MIAMI-DADE COUNTY APPROVED

5/14/14

Nan Ya Plastics Corporation USA

NOTICE OF ACCEPTANCE: EVIDENCE SUBMITTED

A. DRAWINGS

1. Manufacturer's die drawings and sections (submitted under file #12-0612.02/ # 08-0425.12).
2. Drawing No. **NAN0011 Rev D**, titled "Distinction Double Impact Entry O.S. w/ sidelite", sheets 1 through 10 of 10, dated 04/21/08 and last revised on 02-26-14, prepared by PTC, LLC, signed and sealed by Robert J. Amoruso, P.E.

B. TESTS (submitted under file #12-0612.02/ # 08-0425.12)

1. Test reports on 1) Air Infiltration Test, per FBC, TAS 202-94
   2) Uniform Static Air Pressure Test, Loading per FBC TAS 202-94
   3) Water Resistance Test, per FBC, TAS 202-94
   4) Large Missile Impact Test per FBC, TAS 201-94
   5) Cyclic Wind Pressure Loading per FBC, TAS 203-94
   6) Forced Entry Test, per FBC 3603.2 (b) and TAS 202-94

along with marked-up drawings and installation diagram of Fiberglass Outswing glazed Door w/ Sidelites, prepared by ETC Laboratories, Test Report No. **ETC-06-255-174121.4** dated 02/15/08, signed and sealed by Joseph L. Doldan, P.E.

Note: This test report has been revised by an addendum issued by ETC Lab on 08/21/08, signed & sealed by Joseph L. Doldan, P.E.

C. CALCULATIONS

1. Statement letter compliance to FBC 2010 and "No product change", dated February 26, 2014, prepared by PTC, LLC, signed and sealed by Robert J. Amoruso, P.E.
2. Statement letter of compliance to FBC 2007 & 2010 dated April 25, 2012, prepared by PTC, LLC, signed and sealed by Robert J. Amoruso, P.E. (submitted under file **#12-0612.03**)
3. Anchor verification calculations and structural analysis complying per FBC 2007, prepared by PTC Engineering, Inc., dated 4/21/08, signed and sealed by Douglas J. McDougall, P.E. (submitted under file **#08-0425.12**)
4. Successor Engineer's letter dated 01/15/09, prepared, signed and sealed by Paul E. Winter, P.E.

D. QUALITY ASSURANCE

1. Miami Dade Department of Regulatory and Economic Resources (RER).

E. MATERIAL CERTIFICATIONS (submitted under file #12-0612.02/ # 08-0425.12)

1. Test report No.ETC-05-255-16776.1, prepared by ETC Laboratories, dated 07/06/06, issued to Nan Ya Plastics Corp., for their SMC Fiberglass material / ETC05033 per ASTMD-638-03 *"4500 exposed Xenon Arch"* & tensile strength ASTMD-638-03 "*Tensile strength*", *Smoke density* per ASTMD2843-99, *Rate of burning* per ASTMD-635-98 and "*Self ignition*" per ASTMD1929-01, all signed and sealed by Joseph Labora Doldan, P.E.
2. Test report No.ETC-05-255-17144.0, prepared by ETC Laboratories, dated 07/03/08, issued to Nan Ya Plastics Corp., for their Rigid PVC plastic(part #ETC06024) per ASTM D1929-96 *"Standard Test Method for Ignition Properties of Plastics"*, ASTM D2843-99 *"Standard Test Method for Density of Smoke from the Burning or Decomposition of Plastics"*, ASTM D635-98 *"Standard Test Method for Rate of Burning and/or Extent and Time of Burning of Self-Supporting Plastics in a Horizontal Position"* and ASTM D638-03 "Standard Test Methods for Tensile Properties of Plastics" for exposed & unexposed sample per Xenon Arch after 4500 Hours, signed and sealed by Joseph Labora Doldan, P.E.

Ishaq I. Chanda

Ishaq I. Chanda, P.E.
Product Control Examiner
NOA No 14-0305.04
Expiration Date: March 04, 2019
Approval Date: May 22, 2014

E. MATERIAL CERTIFICATIONS (continue)

4. Test report No.ETC-06-255-17412.0, prepared by ETC Laboratories, dated 04/25/06, issued to Nan Ya Plastics Corp., for their Phenolic Foam Board / ETC06013 plastic per ASTME-E84-05 *"Standard Test Method for Surface Burning Characteristics of Building Materials"*, signed and sealed by Joseph Labora Doldan, P.E.
5. Test report No.ETC-05-255-17412.1, prepared by ETC Laboratories, dated 04/25/06, re-issued on 06/28/06 to Nan Ya Plastics Corp., for their Phenolic Foam Board / ETC06013 plastic per ASTME-E84-05 *"Standard Test Method for Surface Burning Characteristics of Building Materials"*, signed and sealed by Joseph L. Doldan, P.E.
6. Test report No.ETC-05-255-17900.0, prepared by ETC Laboratories, dated 06/28/06, issued to Nan Ya Plastics Corp., for their Phenolic Foam Board / ETC06013 plastic per ASTM D1929-96 *"Standard Test Method for Ignition Properties of Plastics"*, signed and sealed by Joseph L. Doldan, P.E.
7. Test report No.ETC-05-255-16776.0, prepared by ETC Laboratories, dated 01/04/06, issued to Nan Ya Plastics Corp., for their SMC / ETC05033 plastic per ASTM D1929-96 *"Standard Test Method for Ignition Properties of Plastics"*, ASTM D2843-99 *"Standard Test Method for Density of Smoke from the Burning or Decomposition of Plastics"*, ASTM D635-98 *"Standard Test Method for Rate of Burning and/or Extent and Time of Burning of Self-Supporting Plastics in a Horizontal Position"* and ASTM D638-03 *"Standard Test Methods for Tensile Properties of Plastics"*, signed and sealed by Joseph Labora Doldan, P.E.
8. Test report No.ETC-05-255-16777.1, prepared by ETC Laboratories, dated 07/26/06, issued to Nan Ya Plastics Corp., for their Cellular PVC / ETC05034 plastic per ASTM D1929-96 *"Standard Test Method for Ignition Properties of Plastics"*, ASTM D2843-99 *"Standard Test Method for Density of Smoke from the Burning or Decomposition of Plastics"*, ASTM D635-98 *"Standard Test Method for Rate of Burning and/or Extent and Time of Burning of Self-Supporting Plastics in a Horizontal Position"* and ASTM D638-03 *"Standard Test Methods for Tensile Properties of Plastics"*, signed and sealed by Joseph Labora Doldan, P.E.
9. Notice of Acceptance No. **12-1231.10,** issued to Eastman Chemical Company, (MA) (former Solutia Inc.) for their "**Saflex Clear or color glass interlayer**", expiring on 05/21/16.

F. STATEMENTS

1. Statement letter of compliance to FBC 2010 dated 02/26/2014, prepared by PTC, LLC, signed and sealed by Robert J. Amoruso, P.E.
2. Statement letter of compliance to FBC 2007 & 2010 dated April 25, 2012, prepared by PTC, LLC, signed and sealed by Robert J. Amoruso, P.E. (submitted under file #12-0612.02)
3. Statement letter, dated SEP 04, 2012 of test standard equivalency of plastic material conformance to FBC 2007 & 2010, prepared by PTC, LLC, signed and sealed by Robert J. Amoruso, P.E.
4. Statement letter of conformance to FBC 2007 & no financial interest, issued by PTC, dated April 21, 2008, signed and sealed by Douglas J. McDougall, P.E. (submitted under file #08-0425.12).
5. Certificate of Authority dated May 23, 1983, to transact business, issued to Nan Ya Plastic Corporation, USA issued by the State of Texas, signed by Secretary of State
6. Lab compliance letter as part of above test reports.

G. OTHER

1. This NOA **revises & renews** NOA # **12-0612.02**, expired on March 04, 2014.
2. Test proposal # **06-1291** dated 11/06/2006 approved by BCCO.

Ishaq I. Chanda, P.E.
Product Control Examiner
NOA No. 14-0305.04
Expiration Date: March 04, 2019
Approval Date: May 22, 2014

NAN YA PLASTICS CORP.

DISTINCTION IMPACT DOUBLE ENTRY O.S. DOOR W/ SIDELIGHTS INSTALLATION ANCHORAGE DETAILS

GENERAL NOTES:

1. THE PRODUCT ANCHORAGE SHOWN HEREIN IS DESIGNED TO COMPLY WITH THE 2010 FLORIDA BUILDING CODE (FBC), INCLUDING HIGH VELOCITY HURRICANE ZONE (HVHZ) REQUIREMENTS, AT THE DESIGN PRESSURES STATED HEREIN. (D)
2. THE PRODUCT DETAILS CONTAINED HEREIN ARE BASED UPON SIGNED AND SEALED TEST REPORT #ETC-07-255-18448.3 DATED 12/03/2008, AND ASSOCIATED LABORATORY STAMPED DRAWINGS.
3. THE PRODUCT HAS BEEN EVALUATED FOR (D) CONFORMANCE TO THE STANDARDS LISTED IN THE 2010 FLORIDA BUILDING CODE (FBC) AND IS IN COMPLIANCE WITH SAID STANDARDS, INCLUDING HIGH VELOCITY HURRICANE ZONE (HVHZ) REQUIREMENTS.
4. ADEQUACY OF THE EXISTING STRUCTURAL CONCRETE / MASONRY AND WOOD FRAMING AS A MAIN WIND FORCE RESISTING SYSTEM CAPABLE OF WITHSTANDING AND TRANSFERRING APPLIED PRODUCT LOADS TO THE FOUNDATION IS THE RESPONSIBILITY OF THE PROJECT ENGINEER OR ARCHITECT OF RECORD.
5. 1X AND 2X BUCKS (WHEN USED) SHALL BE DESIGNED AND ANCHORED TO PROPERLY TRANSFER ALL LOADS TO THE STRUCTURE. BUCK DESIGN AND INSTALLATION IS THE RESPONSIBILITY OF THE PROJECT ENGINEER OR ARCHITECT OF RECORD AND TO BE REVIEWED BY AUTHORITY HAVING JURISDICTION. (B)
6. THE INSTALLATION DETAILS DESCRIBED HEREIN ARE GENERIC AND MAY NOT REFLECT ACTUAL CONDITIONS FOR A SPECIFIC SITE. IF SITE CONDITIONS CAUSE INSTALLATION TO DEVIATE FROM THE REQUIREMENTS DETAILED HEREIN, THEN THE BUILDING OFFICIAL MAY ELECT ONE OF THE FOLLOWING OPTIONS:
   A. OUTSIDE HVHZ: REQUIRE THAT A LICENSED ENGINEER OR ARCHITECT PREPARE AND SUBMIT SITE SPECIFIC DOCUMENTS FOR USE WITH THIS DOCUMENT TO BE REVIEWED BY AUTHORITY HAVING JURISDICTION. (B)
   B. INSIDE HVHZ: REQUIRE THAT A ONE-TIME SITE SPECIFIC APPROVAL BE APPLIED FOR AND OBTAINED FROM THE MIAMI-DADE COUNTY PRODUCT CONTROL SECTION.
7. IN HVHZ AREAS, USE OF AN APPROVED IMPACT PROTECTIVE SYSTEM COMPLYING WITH THE HVHZ REQUIREMENTS OF THE 2010 FBC IS NOT MANDATORY FOR THE PRODUCT HEREIN. (D)
8. DOOR FRAME AND PANEL FRAME MATERIAL: FOAM PVC DOOR PANEL SKIN IS MOULDED FIBERGLASS SKIN
9. GLASS MEETS THE REQUIREMENTS OF ASTM E1300-04e1 GLASS CHARTS. SEE SHEET 3 AND 4 FOR GLAZING DETAILS.
10. DOOR CONSTRUCTION: FIBERGLASS SKIN W/ PHENOLIC FOAM CORE
11. A 1/3 INCREASE IN ALLOWABLE STRESS FOR WIND LOADS WAS NOT USED IN THE DESIGN OF THE PRODUCT(S) SHOWN HEREIN.
12. ACTIVE DOOR, INACTIVE DOOR AND SIDELITE PANELS CAN BE GLAZED USING GLAZING DETAIL A ON SHEET 3 OR GLAZING DETAIL B ON SHEET 4. (B)

INSTALLATION NOTES:

1. ONE (1) INSTALLATION ANCHOR IS REQUIRED AT EACH ANCHOR LOCATION SHOWN.
2. THE NUMBER OF INSTALLATION ANCHORS DEPICTED IS THE MINIMUM NUMBER OF ANCHORS TO BE USED FOR PRODUCT INSTALLATION.
3. SHIM AS REQUIRED AT EACH INSTALLATION ANCHOR WITH LOAD BEARING SHIM. MAXIMUM ALLOWABLE SHIM SIZE OF 1/4 INCH. SHIM WHERE SPACE OF 1/16 INCH OR GREATER OCCURS. SHIM SHALL BE CONSTRUCTED OF HIGH DENSITY PLASTIC OR BETTER.
4. FOR INSTALLATION INTO WOOD FRAMING, USE #12 WOOD SCREWS OF SUFFICIENT LENGTH TO ACHIEVE 1 1/2 INCH MINIMUM EMBEDMENT.
5. FOR INSTALLATION THROUGH 1X BUCK (BUCK TO BE PROPERLY SECURED) TO CONCRETE / MASONRY, OR DIRECTLY INTO CONCRETE / MASONRY, USE 1/4 INCH ITW TAPCONS OF SUFFICIENT LENGTH TO ACHIEVE 1 1/4 INCH MINIMUM EMBEDMENT. (B)
6. MINIMUM EMBEDMENT AND EDGE DISTANCE EXCLUDE WALL FINISHES (INCLUDING BUT NOT LIMITED TO STUCCO, FOAM, BRICK VENEER, AND SIDING).
7. INSTALLATION ANCHORS AND ASSOCIATED HARDWARE MUST BE MADE OF CORROSION RESISTANT MATERIAL OR HAVE A CORROSION RESISTANT COATING.
8. FOR CONCRETE BLOCK, DO NOT INSTALL INSTALLATION ANCHORS INTO MORTAR JOINTS. EDGE DISTANCE IS MEASURED FROM FREE EDGE OF BLOCK OR EDGE OF MORTAR JOINT INTO FACE SHELL OF BLOCK.
9. INSTALLATION ANCHORS SHALL BE INSTALLED IN ACCORDANCE WITH ANCHOR MANUFACTURER'S INSTALLATION INSTRUCTIONS, AND ANCHORS SHALL NOT BE USED IN SUBSTRATES WITH STRENGTHS LESS THAN THE MINIMUM STRENGTH SPECIFI ED BY THE ANCHOR MANUFACTURER.
10. INSTALLATION ANCHOR CAPACITIES FOR PRODUCTS HEREIN ARE BASED ON SUBSTRATE MATERIALS WITH THE FOLLOWING PROPERTIES:
    A. WOOD - PT SOUTHERN YELLOW PINE, MINIMUM SPECIFIC GRAVITY OF 0.55.
    B. CONCRETE -MINIMUM COMPRESSIVE STRENGTH OF 3192 PSI AND COMPLIES WITH ACI 301.
    C. MASONRY - STRENGTH CONFORMANCE TO ASTM C-90.

PRODUCT REVISED
as complying with the Florida Building Code
Acceptance No 14-0305.04
Expiration Date MAR 04, 2019
By Ishaq I. Chanda
Miami Dade Product Control

TABLE OF CONTENTS

SHEET	SHEET DESCRIPTION
1	GENERAL AND INSTALLATION NOTES
2	ELEVATION AND ANCHOR LAYOUT
3	VERTICAL SECTIONS AND GLAZING DETAIL
4	VERTICAL SECTIONS AND GLAZING DETAIL
5 (B)	VERTICAL SECTIONS
6	VERTICAL SECTIONS
7	HORIZONTAL SECTIONS
8	HORIZONTAL SECTIONS
9	BILL OF MATERIALS
10	COMPONENTS

DESIGN PRESSURE RATING (PSF)		IMPACT RATING
WATER INFILTRATION REQUIRED	WATER INFILTRATION NOT REQUIRED	LARGE MISSLE IMPACT
±50.0	±50.0	

PROJECT NO. 414-0107

REV	DESCRIPTION	DATE	BY
D	NOA RENEWAL	02/26/14	RJA
C	UPDATE TO 2010 FBC	04/25/12	TJH
B	PER MIAMI DADE 01/06/09	1/15/09	SMC

NAN YA PLASTICS CORP.
8989 NORTH LOOP EAST
HOUSTON, TX 77029

DISTINCTION DOUBLE IMPACT ENTRY O.S. DOOR W/ SIDELITES GENERAL AND ANCHOR NOTES

PREPARED BY: PTC PRODUCT DESIGN GROUP, LLC PO BOX 520775 LONGWOOD, FLORIDA 32752 FBPE C.A. NO. 29305 Phone: 321.690.1788 Fax: 321.690.1789 Email: info@ptc-corp.com

DRAWN BY: BB | DATE: 04/21/08 | SCALE: N.T.S. | DRAWING NO: NAN0011 | REV: D | SHEET: 1 OF 10

Robert J. Amoruso, P.E.
FL P.E. No. 49752

2/26/14

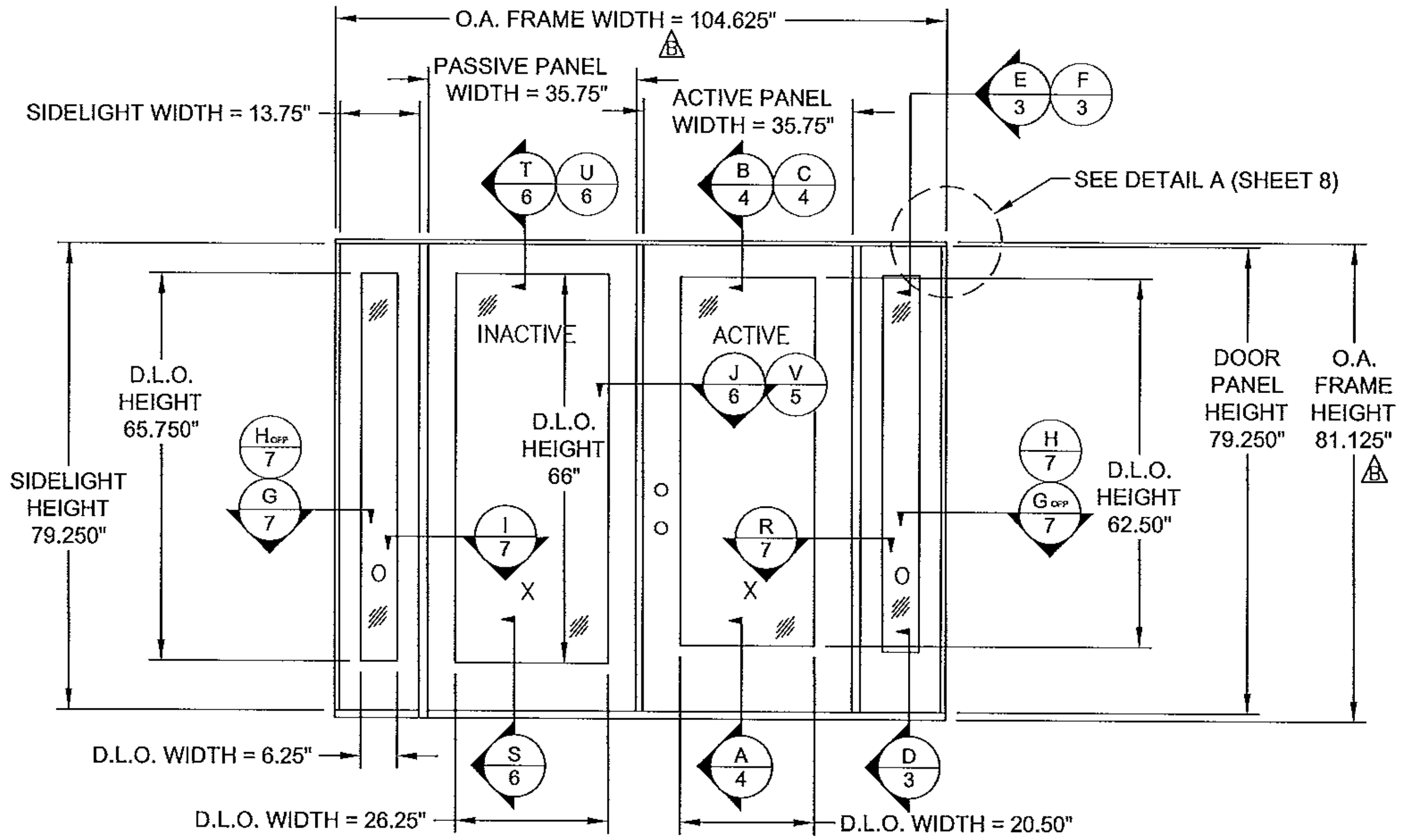

ELEVATION

EXTERIOR

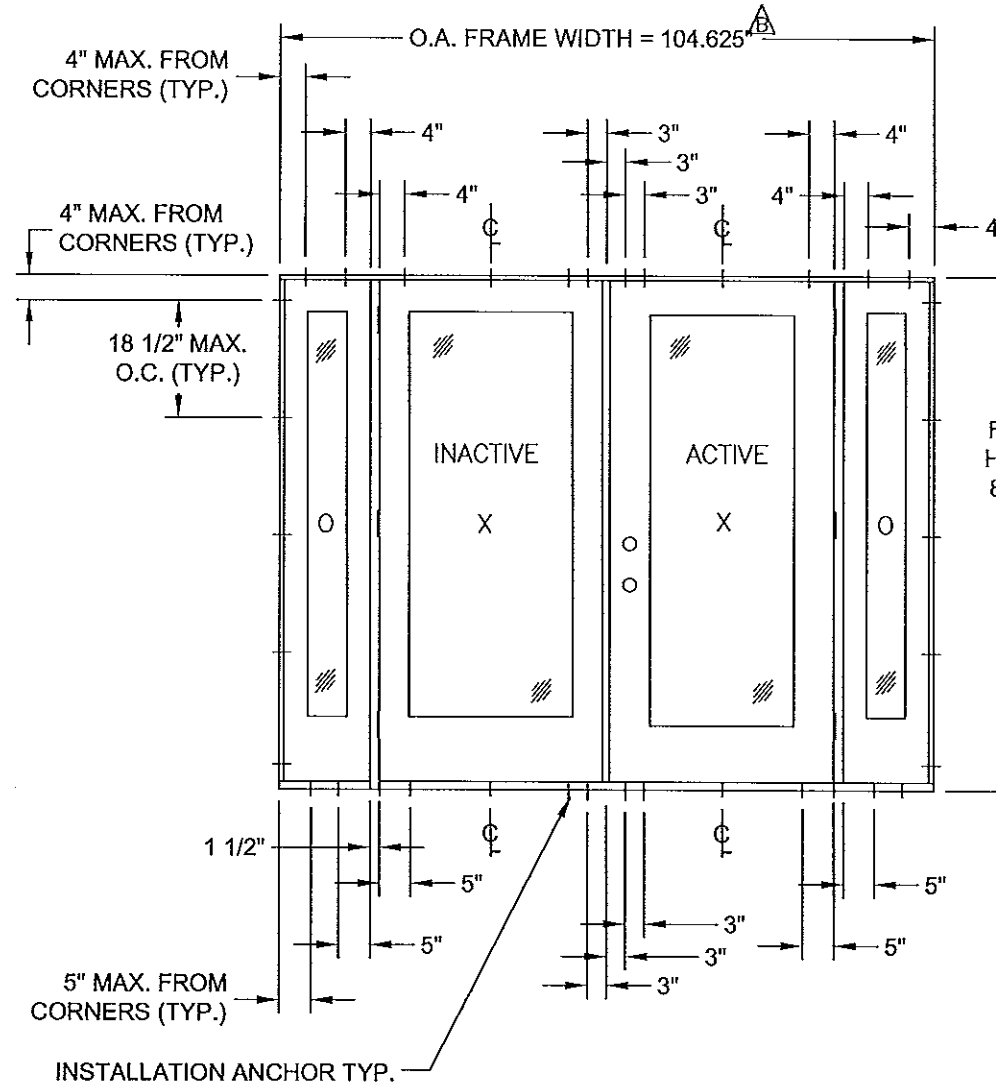

ANCHOR LAYOUT

EXTERIOR

TYPICAL GLAZED OR OPAQUE SIDELITES

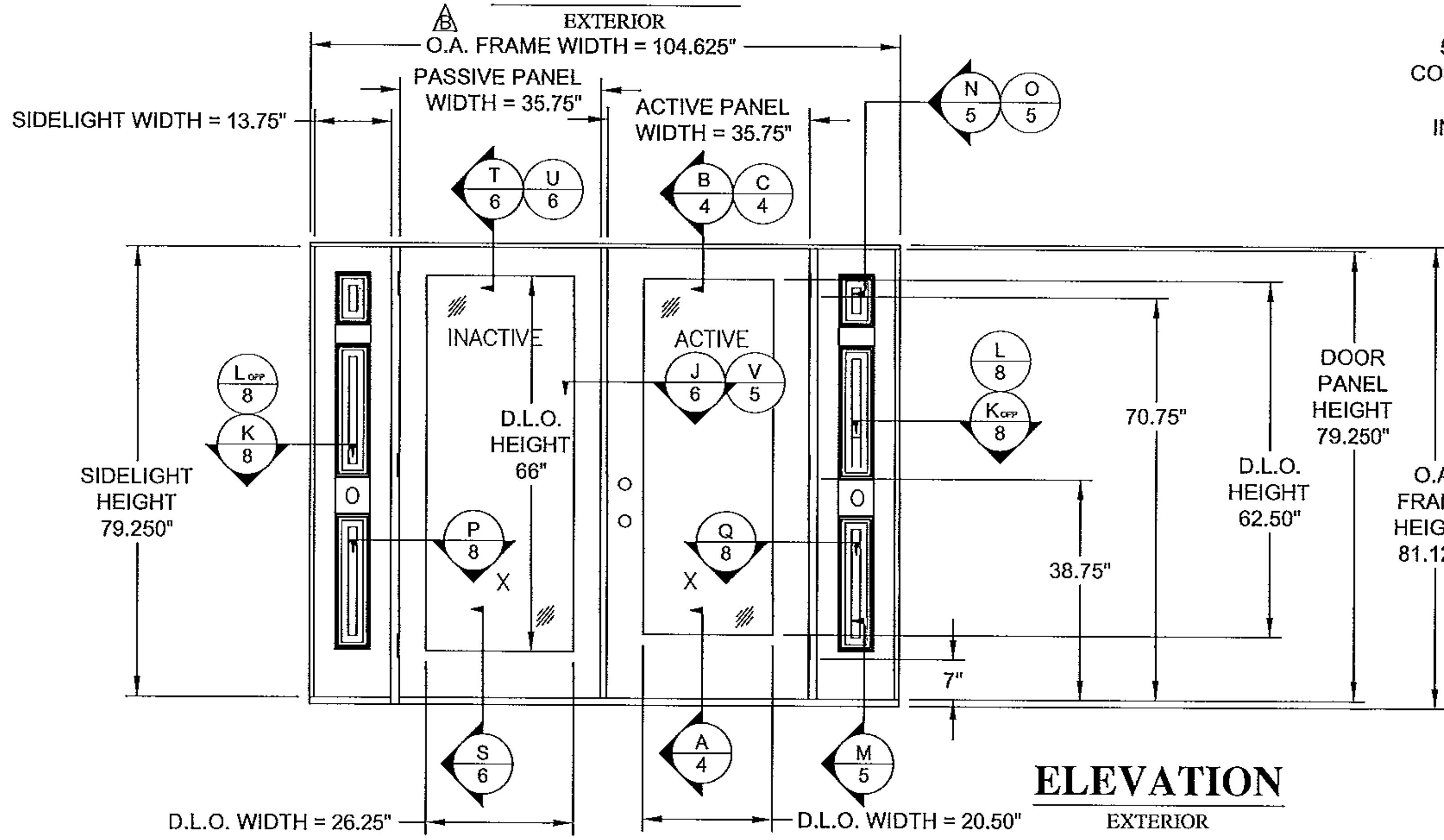

ELEVATION

EXTERIOR

PRODUCT REVISED as complying with the Florida Building Code Acceptance No 14-0305.04 Expiration Date 3/4/2019 By Ishaq I. Chanda Miami Dade Product Control

Robert J. Amoruso, P.E. FL P.E. No. 49752

PROJECT NO. 414-0107

REV	DESCRIPTION	DATE	BY
D	NOA RENEWAL	02/26/14	RJA
C	UPDATE TO 2010 FBC	04/25/12	TJH
B	PER MIAMI DADE 01/06/09	1/15/09	SMC

NAN YA PLASTICS CORP.
8989 NORTH LOOP EAST
HOUSTON, TX 77029

DISTINCTION DOUBLE IMPACT ENTRY O.S. DOOR W/ SIDELITES ELEVATION AND ANCHOR LAYOUT

PREPARED BY: PTC PRODUCT DESIGN GROUP, LLC PO BOX 520775 LONGWOOD, FLORIDA 32752 FBPE C.A. NO. 29835 Phone: 321.690.1788 Fax: 321.690.1789 Email: info@ptc-corp.com

DRAWN BY: | DATE: 04/21/08 | SCALE: N.T.S. | DRAWING NO: NAN0011 | REV: D | SHEET: 2 OF 10

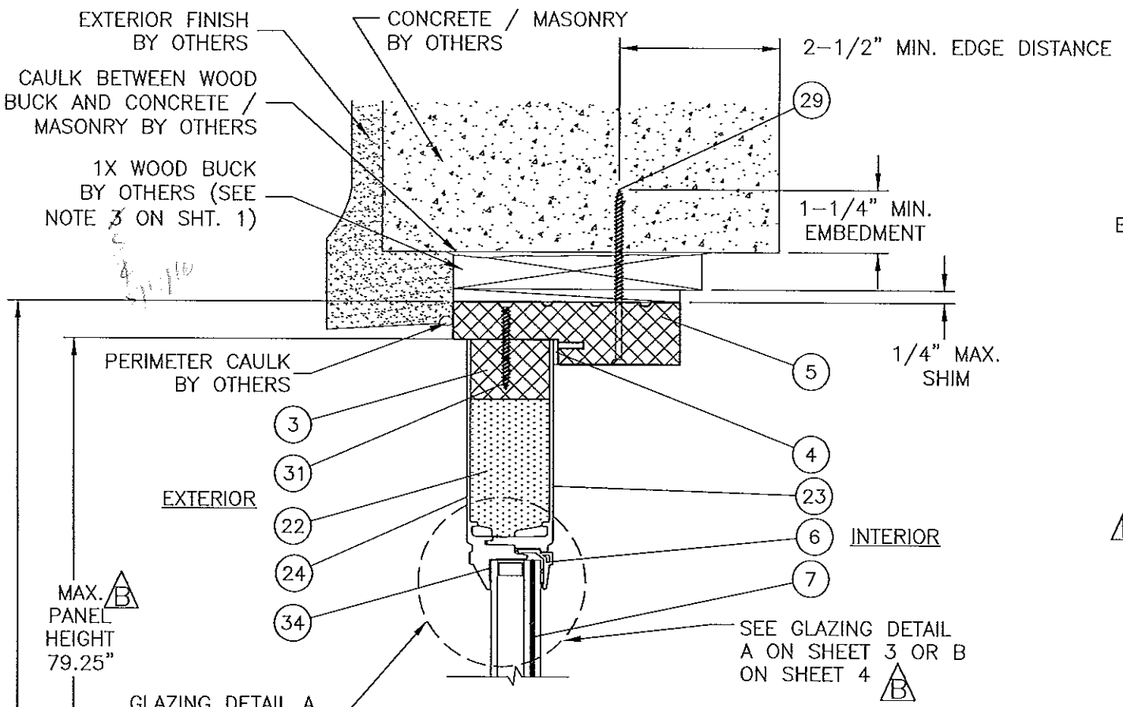

E VERTICAL SECTION
CONCRETE / MASONRY SUBSTRATE
GLAZED SIDELITE (A)

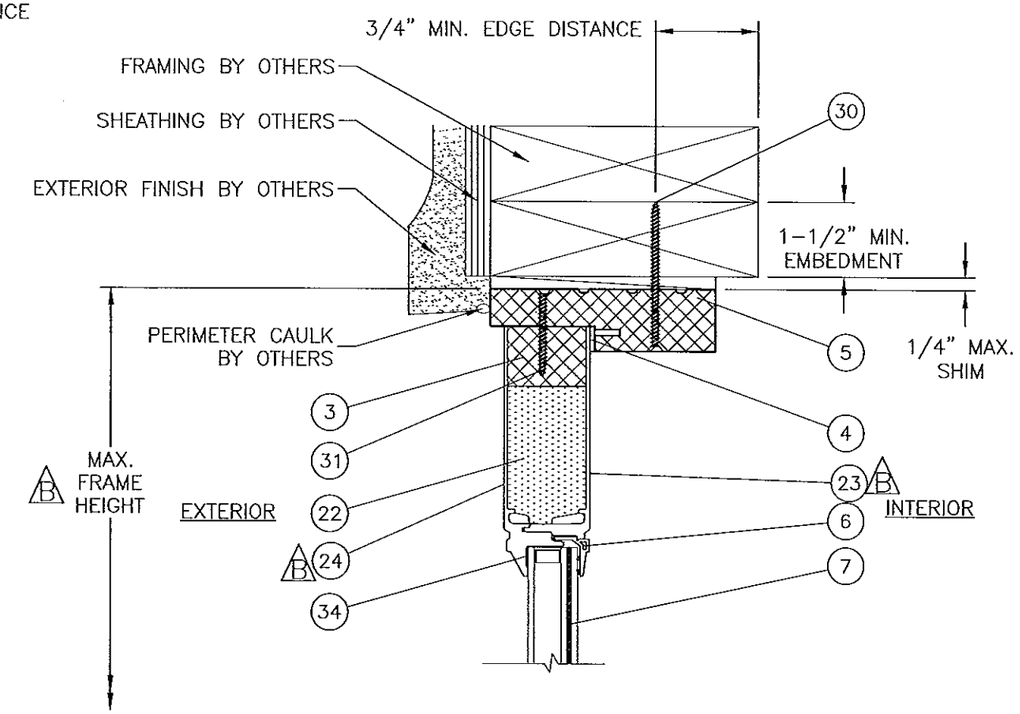

F VERTICAL SECTION
WOOD FRAME SUBSTRATE
GLAZED SIDELITE (A)

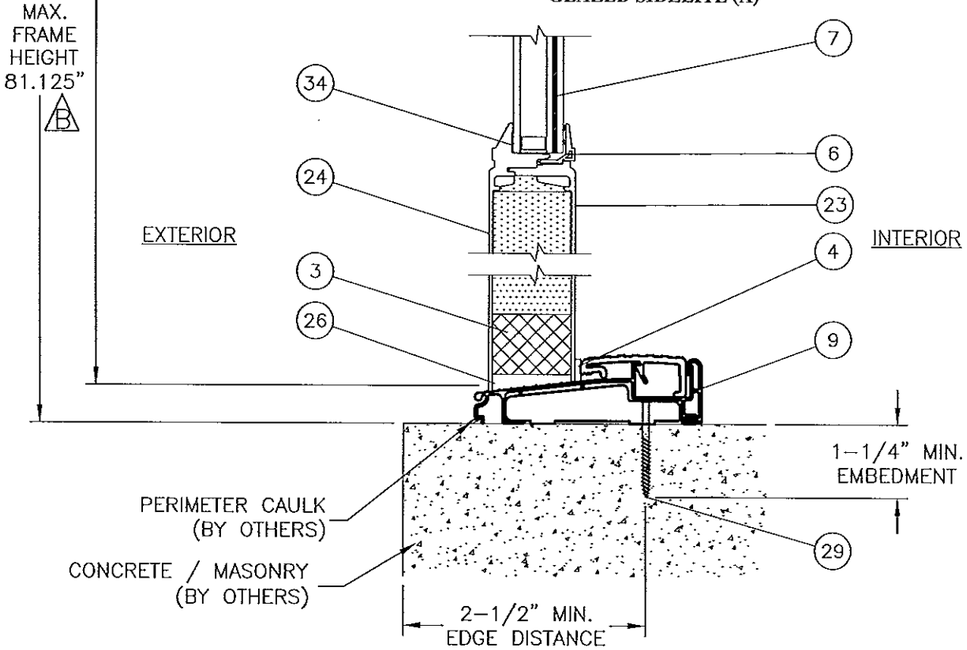

D VERTICAL SECTION
CONCRETE / MASONRY SUBSTRATE
GLAZED SIDELITE (A)

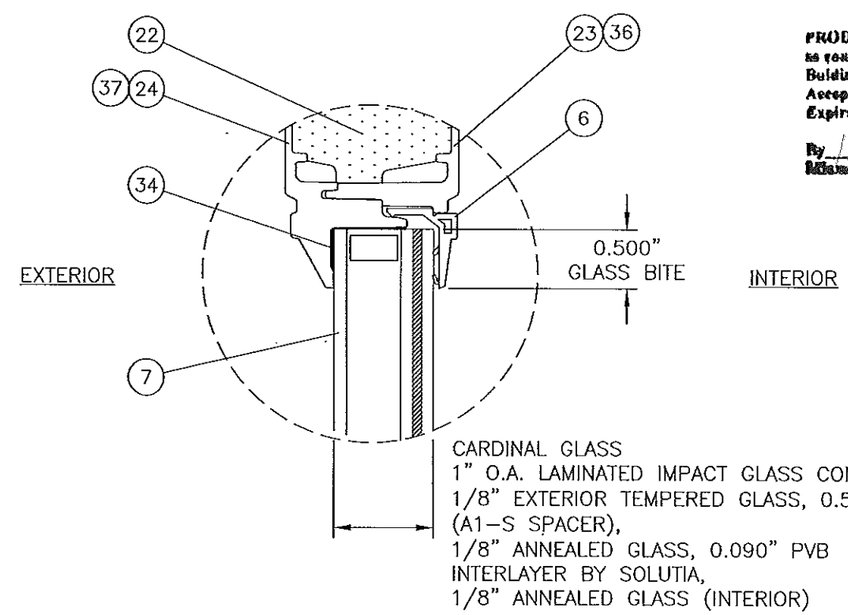

GLAZING DETAIL A

PRODUCT REVISED
as complying with the Florida Building Code
Acceptance No 14-0305.04
Expiration Date 3/6/19
By Chang L. Chen
Miami Dade Product Control

PROJECT NO. 414-0107			
REV	DESCRIPTION	DATE	BY
D	NOA RENEWAL	02/26/14	RJA
C	UPDATE TO 2010 FBC	04/25/12	TJH
B	PER MIAMI DADE 01/06/09	1/15/09	SMC

NAN YA PLASTICS CORP.
8989 NORTH LOOP EAST
HOUSTON, TX 77029

DISTINCTION DOUBLE IMPACT ENTRY O.S. DOOR W/ SIDELITES
VERTICAL SECTIONS AND GLAZING DETAIL

DRAWN BY: | DATE: 04/21/08
SCALE: N.T.S. | DRAWNING NO: NAN0011
REV: D | SHEET: 3 OF 10

PREPARED BY:
PTC PRODUCT DESIGN GROUP, LLC
PO BOX 520773
LONGWOOD, FLORIDA 32752
FBPE C.A. NO. 29015
Phone: 321.860.1798
Fax: 321.860.1798
Email: info@ptc-corp.com

Robert J. Amoruso, P.E.
FL P.E. No. 49752

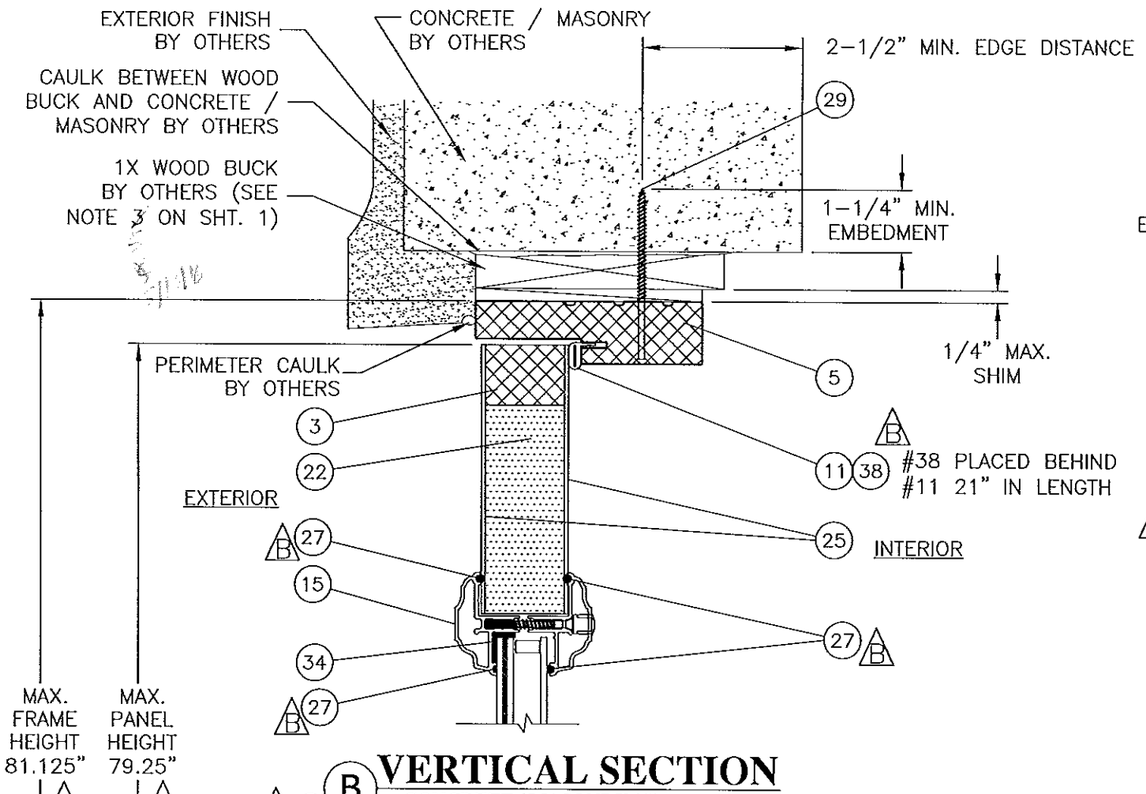

B VERTICAL SECTION

CONCRETE / MASONRY SUBSTRATE
DOOR PANEL (B)

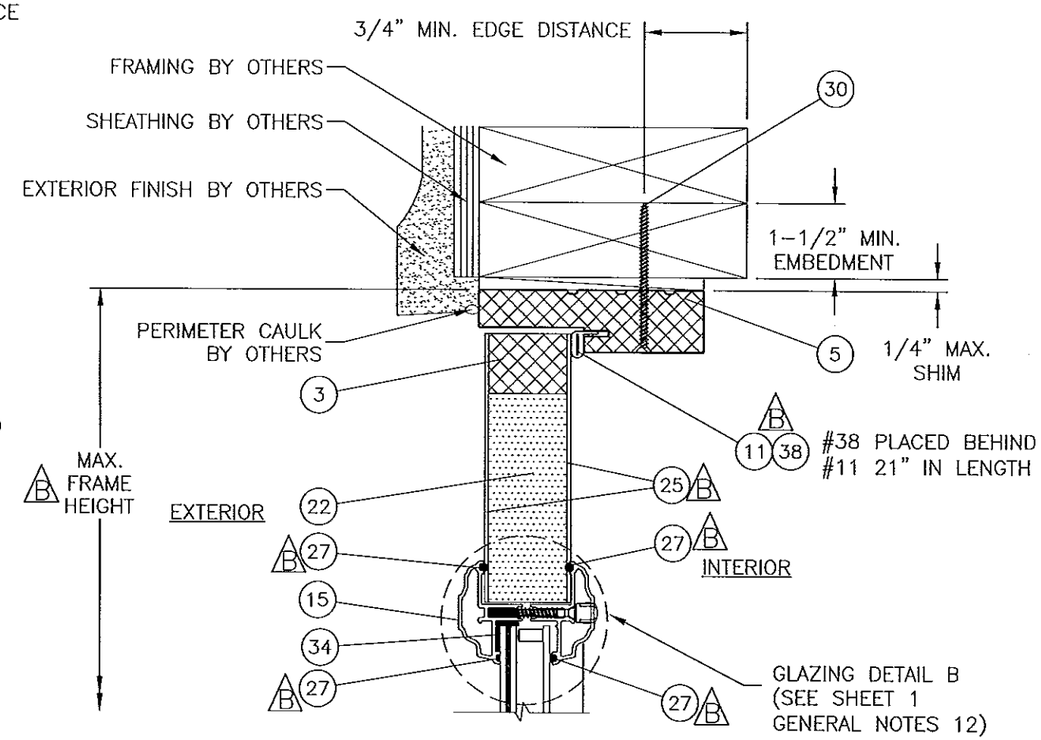

C VERTICAL SECTION

WOOD FRAME SUBSTRATE
DOOR PANEL (B)

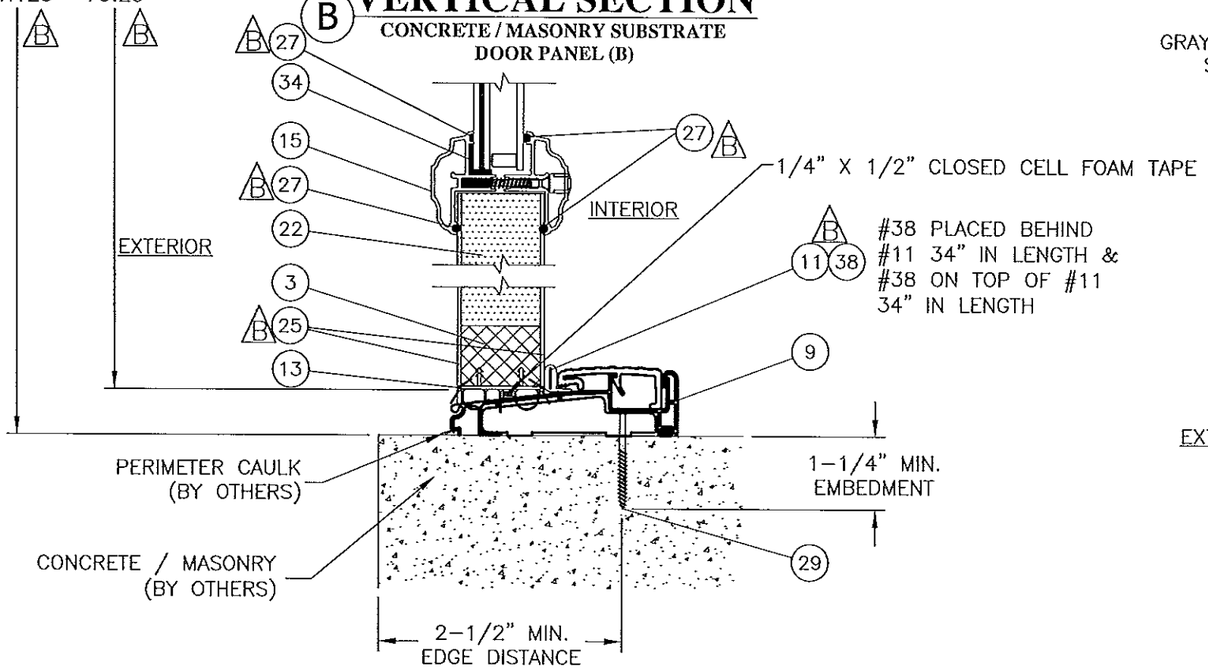

A VERTICAL SECTION

CONCRETE / MASONRY SUBSTRATE
DOOR PANEL (B)

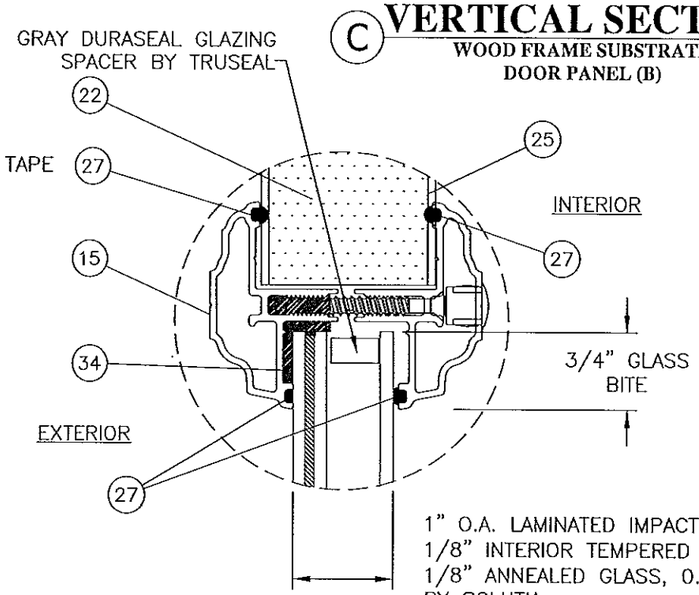

1" O.A. LAMINATED IMPACT GLASS CONSISTING OF:
1/8" INTERIOR TEMPERED GLASS, 0.540" AIR SPACE,
1/8" ANNEALED GLASS, 0.090" SAFLEX PVB INTERLAYER BY SOLUTIA,
1/8" ANNEALED GLASS (PER CURRENT NOA)

GLAZING DETAIL B

ODL LITE KIT (PER CURRENT NOA)

PRODUCT REVIEWED
as complying with the Florida Building Code
Acceptance No 14-0305.04
Expiration Date 3/4/19
By
Miami Dade Product Control

REV	DESCRIPTION	DATE	BY
D	NOA RENEWAL	02/26/14	RJA
C	UPDATE TO 2010 FBC	04/25/12	TJH
B	PER MIAMI DADE 01/06/09	1/15/09	SMC

PROJECT NO. 414-0107

NAN YA PLASTICS CORP.
8989 NORTH LOOP EAST
HOUSTON, TX 77029

DISTINCTION DOUBLE IMPACT ENTRY O.S. DOOR W/ SIDELITES
VERTICAL SECTIONS AND GLAZING DETAIL

DRAWN BY:
DATE: 04/21/08
SCALE: N.T.S.
DRAWING NO: NAN0011
REV: D
SHEET: 4 OF 10

PREPARED BY:
PTC PRODUCT DESIGN GROUP, LLC
PO BOX 520775
LONGWOOD, FLORIDA 32752
FBPE C.A. No. 26845
Phone: 321.690.1788
Fax: 321.690.1789
Email: info@ptc-corp.com

Robert J. Amoruso, P.E.
FL P.E. No. 49752

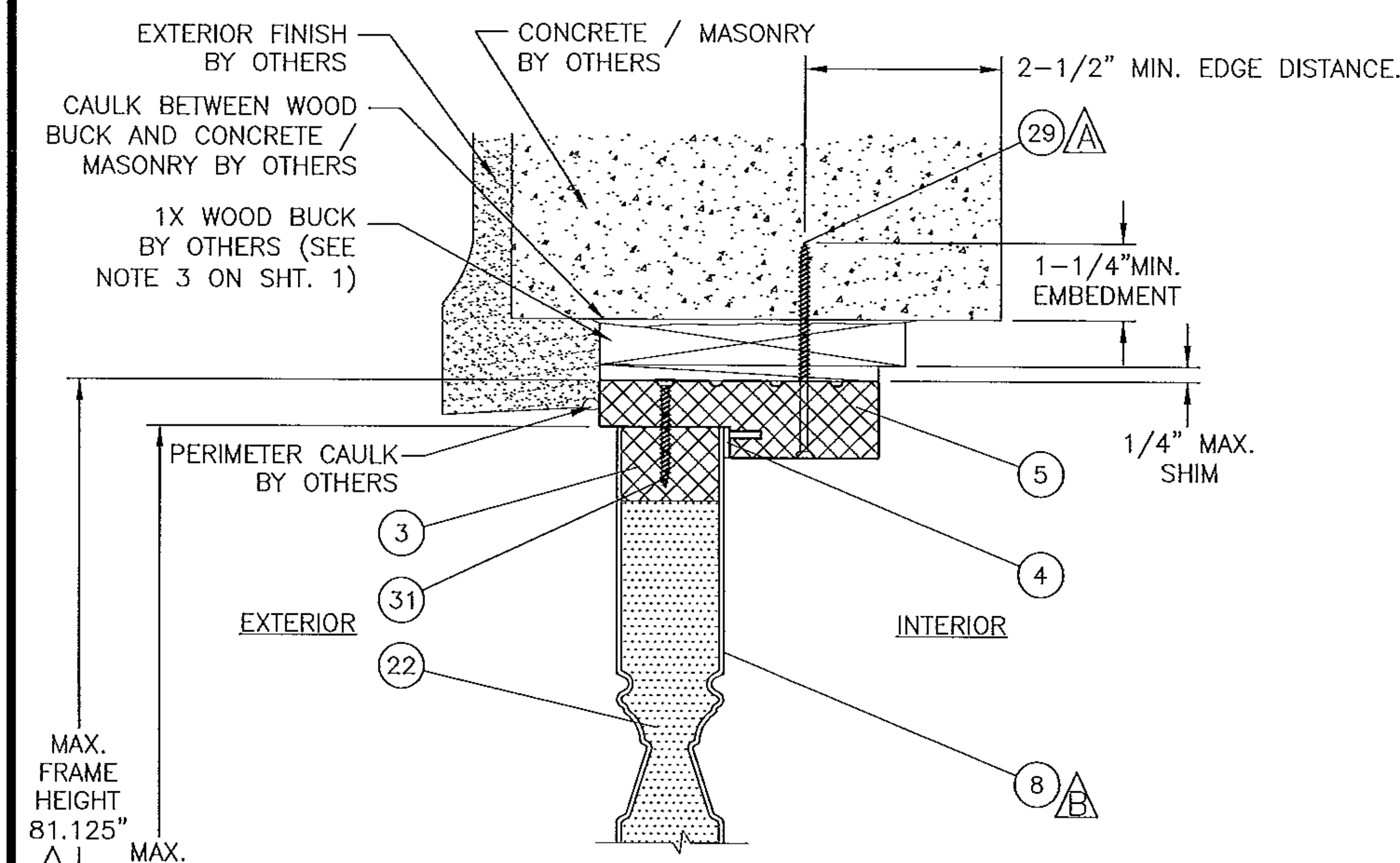

N **VERTICAL SECTION**
CONCRETE / MASONRY SUBSTRATE
OPAQUE SIDELITE

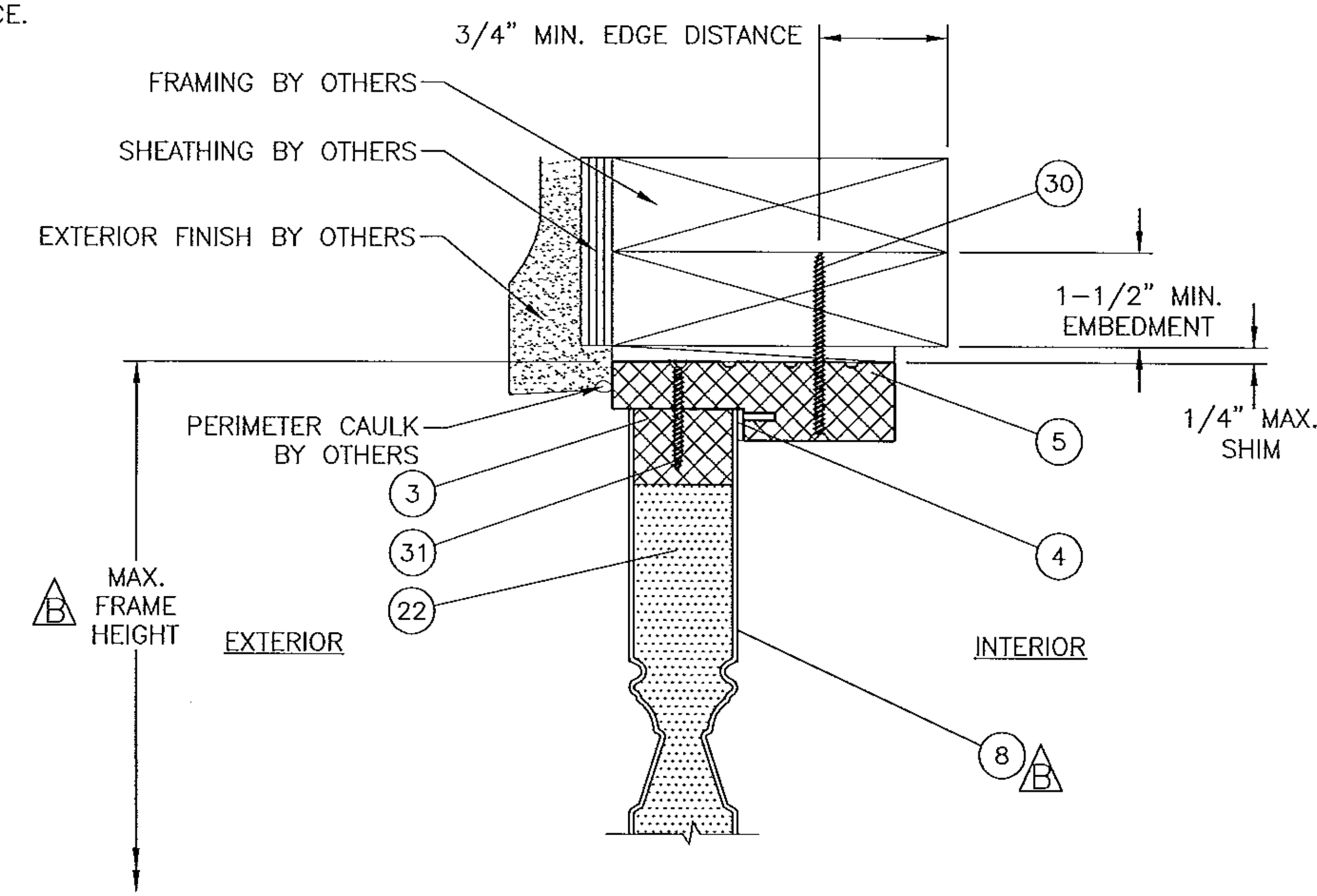

O **VERTICAL SECTION**
WOOD FRAME SUBSTRATE
OPAQUE SIDELITE

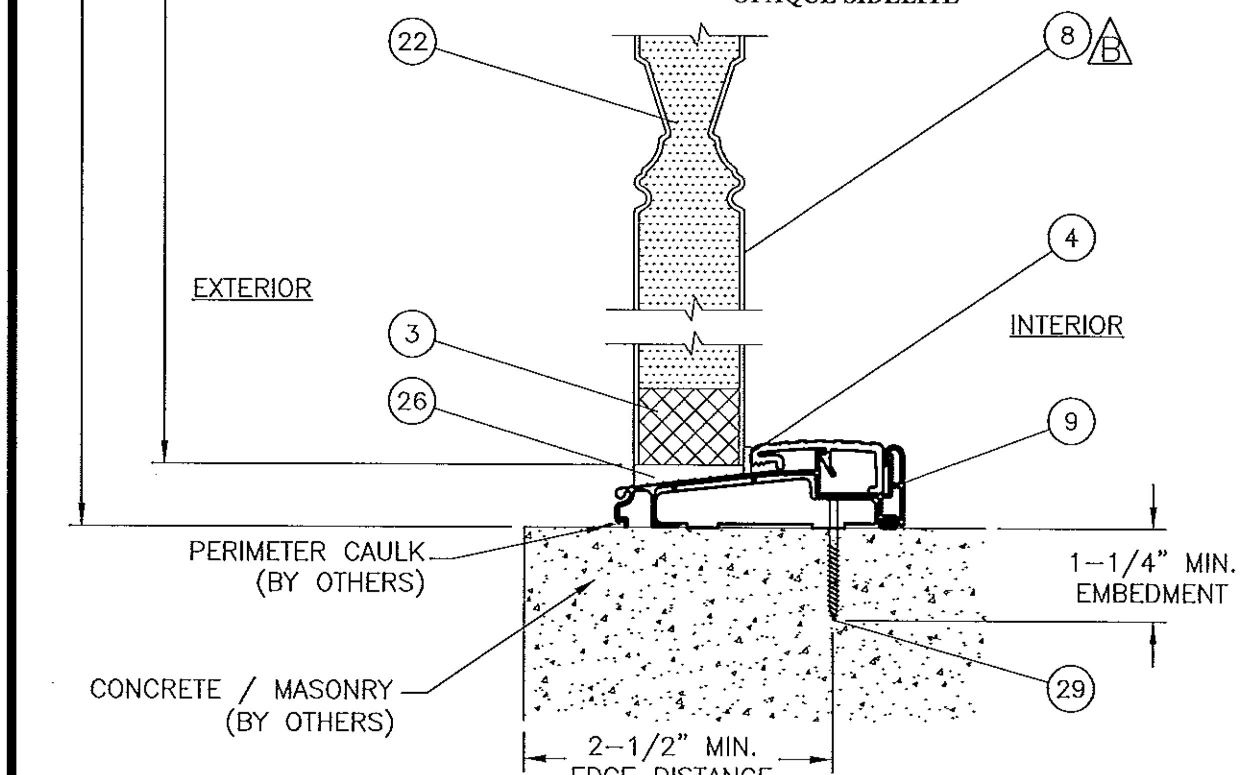

M **VERTICAL SECTION**
CONCRETE / MASONRY SUBSTRATE
OPAQUE SIDELITE

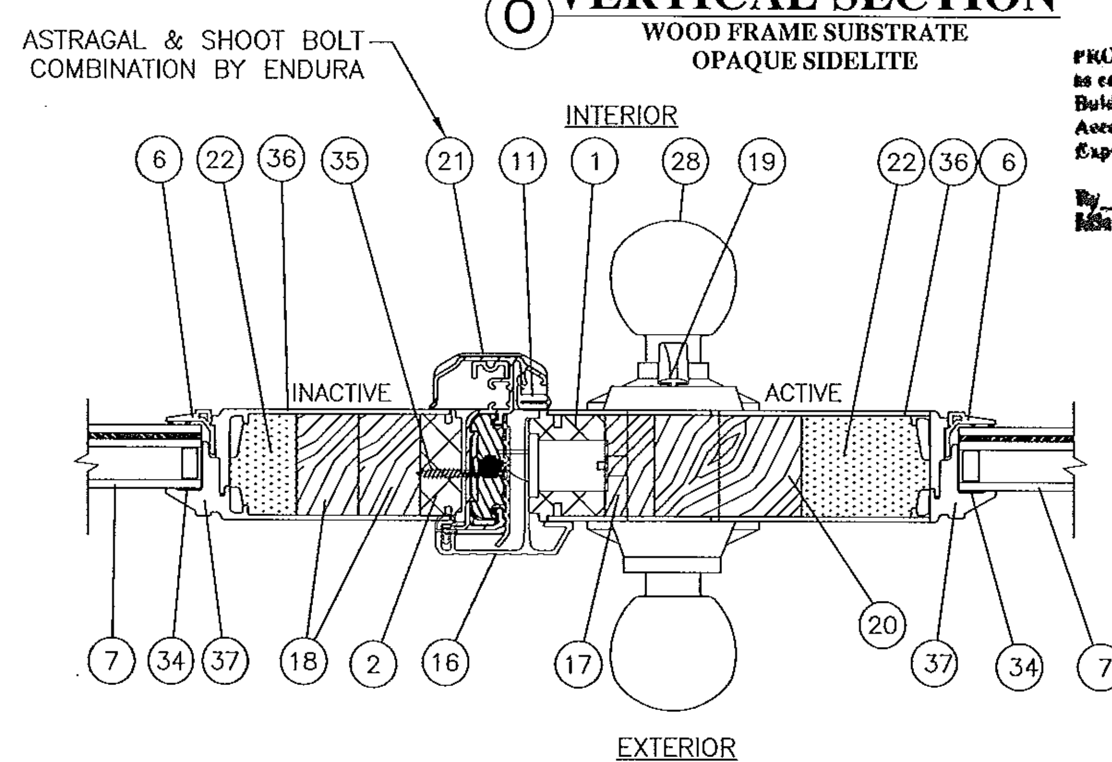

B V **HORIZONTAL SECTION**
ASTRAGAL
DOOR PANEL (A) / DOOR PANEL (A)

PRODUCT REVISED
as complying with the Florida Building Code
Acceptance No 14-0305.04
Expiration Date 3/14/19
By [signature]
Miami Dade Product Control

PROJECT NO. 414-0107

REV	DESCRIPTION	DATE	BY
D	NOA RENEWAL	02/26/14	RJA
C	UPDATE TO 2010 FBC	04/25/12	TJH
B	PER MIAMI DADE 01/06/09	1/15/09	SMC

NAN YA PLASTICS CORP.
8989 NORTH LOOP EAST
HOUSTON, TX 77029

DISTINCTION DOUBLE IMPACT ENTRY O.S. DOOR W/ SIDELITES
VERTICAL & HORIZONTAL SECTIONS

PREPARED BY: PTC PRODUCT DESIGN GROUP, LLC PO BOX 520775 LONGWOOD, FLORIDA 32752 FRPF C.A. NO. 25035 Phone: 321.690.1788 Fax: 321.690.1789 Email: info@ptc-corp.com

DRAWN BY: | DATE: 04/21/08 | SCALE: N.T.S. | DRAWING NO: NAN0011 | REV: D | SHEET: 5 OF 10

Robert J. Amoruso, P.E.
FL P.E. No. 49752
[signature] 2/26/14

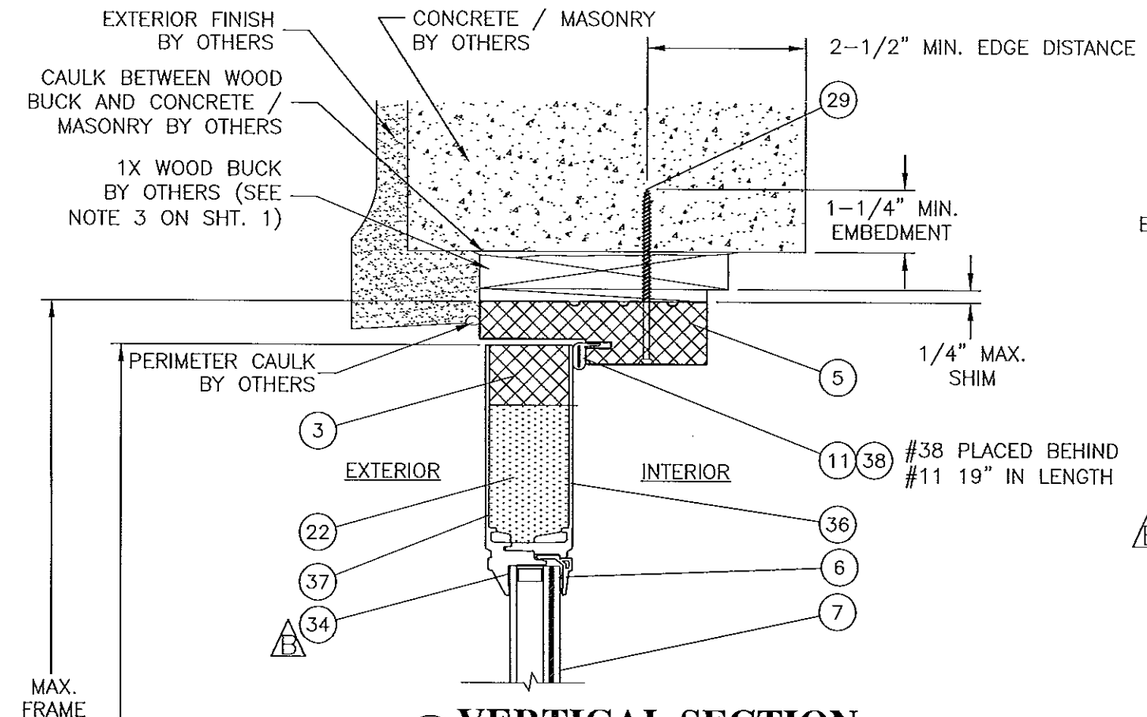

T VERTICAL SECTION
CONCRETE / MASONRY SUBSTRATE
DOOR PANEL (A)

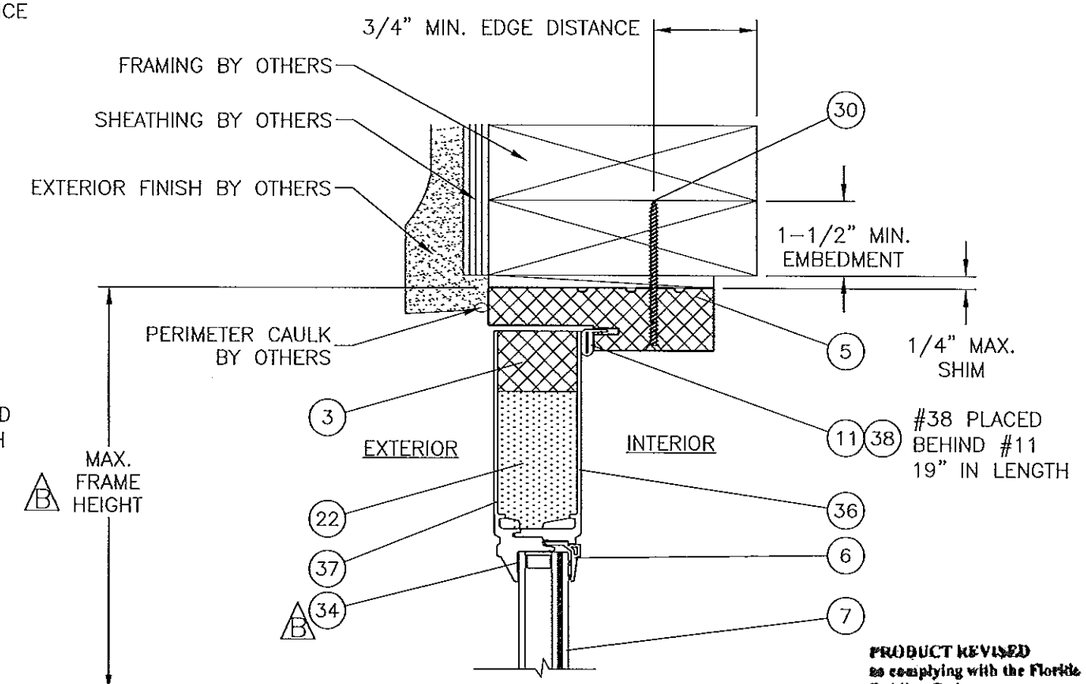

PRODUCT REVISED
as complying with the Florida Building Code
Acceptance No. 14-0305.04
Expiration Date 3/14/19
By Khang L. Chan
Miami Dade Product Control

U VERTICAL SECTION
WOOD FRAME SUBSTRATE
DOOR PANEL (A)

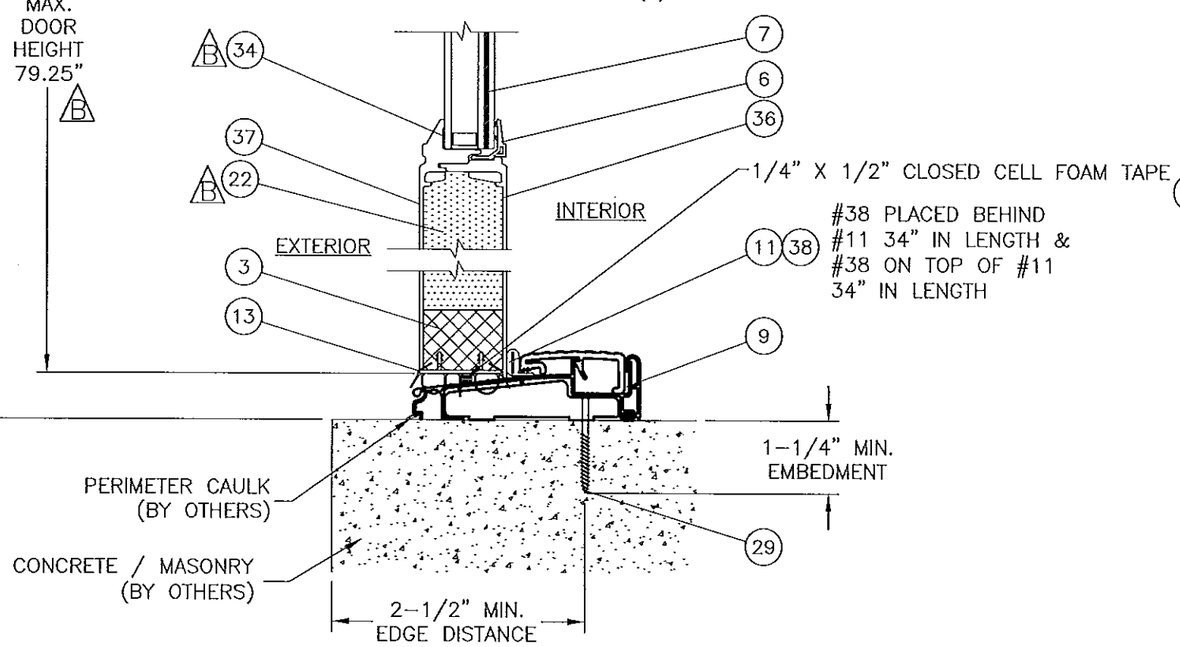

S VERTICAL SECTION
CONCRETE / MASONRY SUBSTRATE
DOOR PANEL (A)

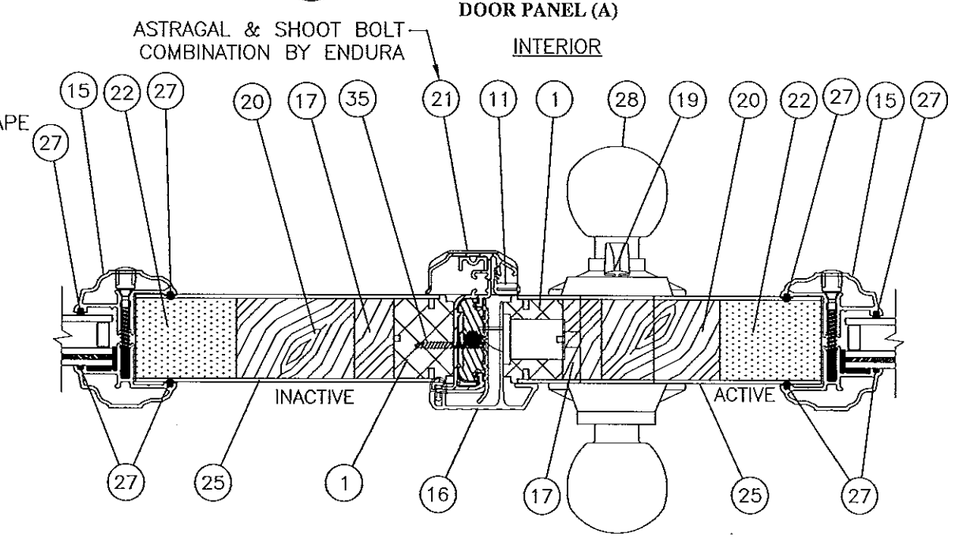

J HORIZONTAL SECTION
ASTRAGAL
DOOR PANEL (B) / DOOR PANEL (B)

REV.	DESCRIPTION	DATE	BY
D	NOA RENEWAL	02/26/14	RJA
C	UPDATE TO 2010 FBC	04/25/12	TJH
B	PER MIAMI DADE 01/06/09	1/15/09	SMC

PROJECT NO. 414-0107

NAN YA PLASTICS CORP.
8989 NORTH LOOP EAST
HOUSTON, TX 77029

DISTINCTION DOUBLE IMPACT ENTRY O.S. DOOR W/ SIDELITES
VERTICAL & HORIZONTAL SECTIONS

DRAWN BY: | DATE: 04/21/08
SCALE: N.T.S. | DRAWNING NO: NAN0011
REV: D | SHEET: 6 OF 10

PREPARED BY:
PTC PRODUCT DESIGN GROUP, LLC
PO BOX 520775
LONGWOOD, FLORIDA 32752
FBPE C.A. NO. 29826
Phone: 321.660.1788
Fax: 321.660.1789
Email: info@ptc-corp.com

Robert J. Amoruso, P.E.
FL P.E. No. 49752

2/26/14

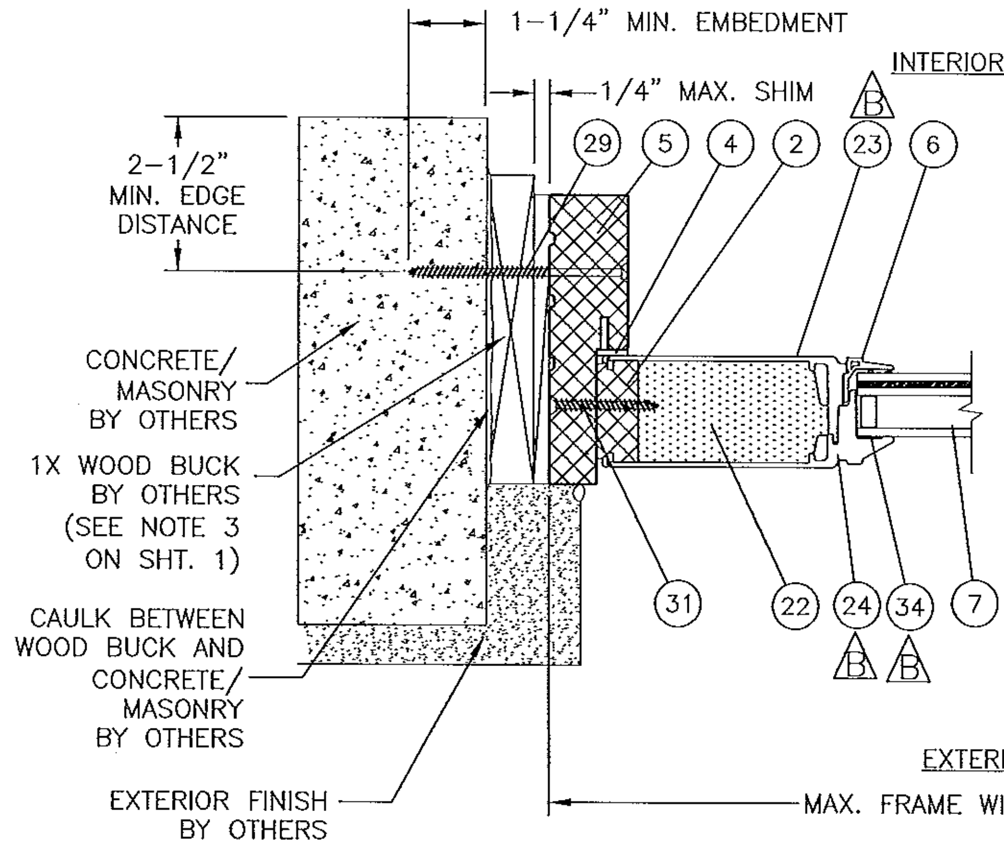

G **HORIZONTAL SECTION**
CONCRETE / MASONRY SUBSTRATE
SIDELITE (A)

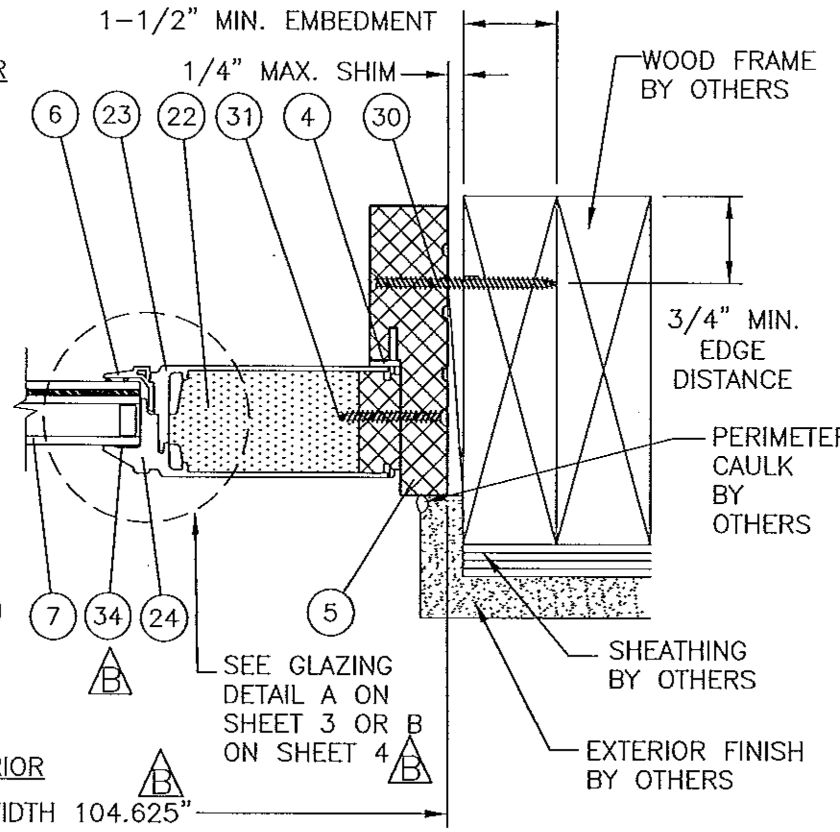

H **HORIZONTAL SECTION**
WOOD FRAME SUBSTRATE
SIDELITE (A)

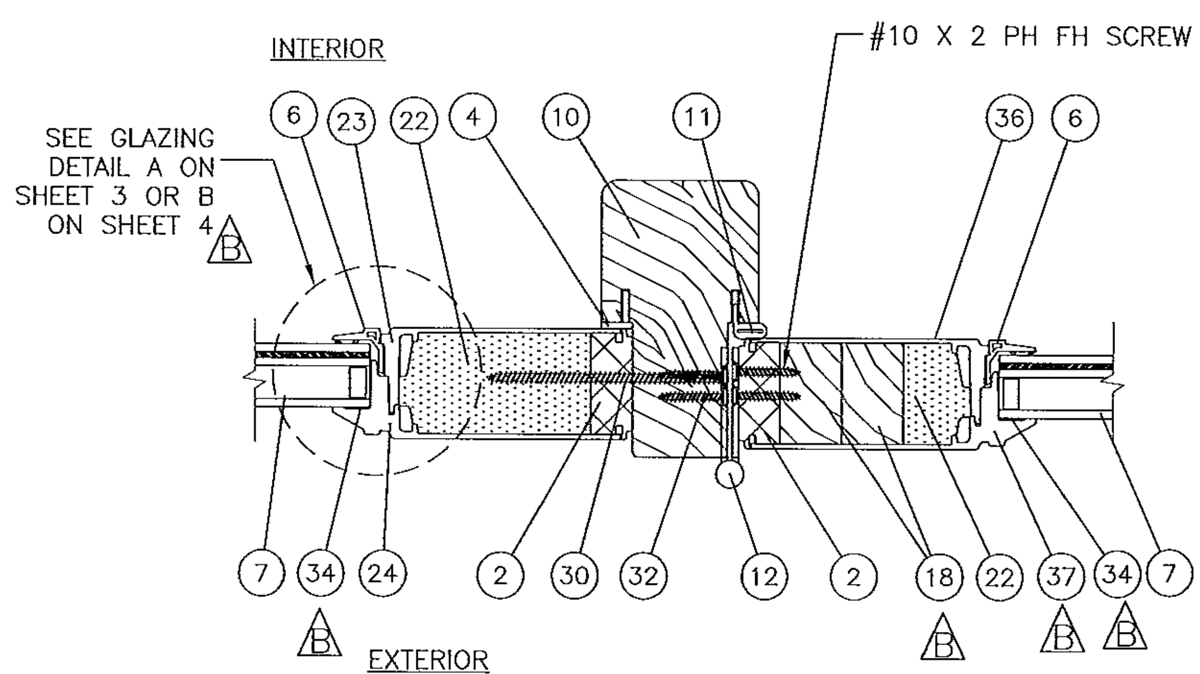

I **HORIZONTAL SECTION**
MULLION
SIDELITE (A) / DOOR PANEL (A)

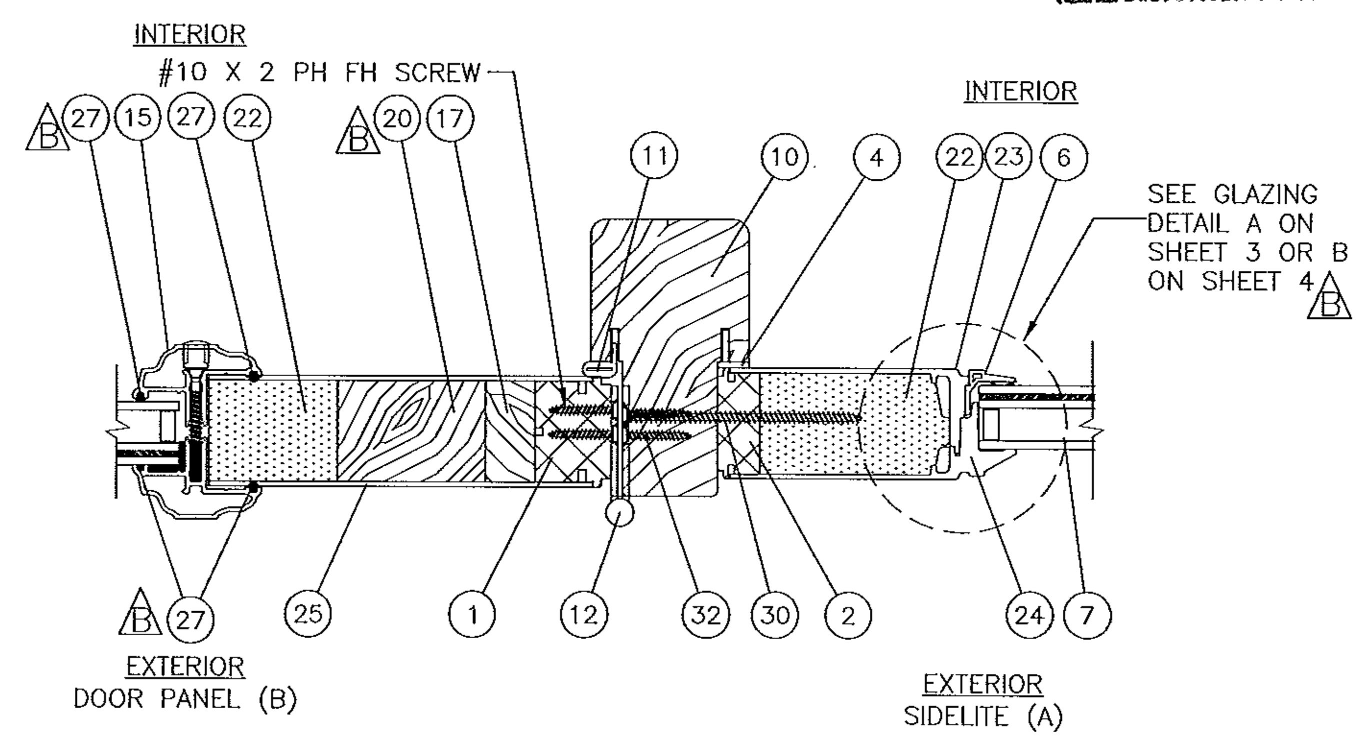

R **HORIZONTAL SECTION**
MULLION
DOOR PANEL (B) / SIDELITE (A)

PRODUCT REVISED
as complying with the Florida Building Code
Acceptance No 14-0305.04
Expiration Date 3/14/19
By [signature]
Miami Dade Product Control

REV	DESCRIPTION	DATE	BY
D	NOA RENEWAL	02/26/14	RJA
C	UPDATE TO 2010 FBC	04/25/12	TJH
B	PER MIAMI DADE 01/06/09	1/15/09	SMC

PROJECT NO. 414-0107

NAN YA PLASTICS CORP.
8989 NORTH LOOP EAST
HOUSTON, TX 77029

DISTINCTION DOUBLE IMPACT ENTRY O.S. DOOR W/ SIDELITES
HORIZONTAL SECTIONS

PREPARED BY:	DRAWN BY:	DATE: 04/21/08
PTC PRODUCT DESIGN GROUP, LLC PO BOX 520775 LONGWOOD, FLORIDA 32752 FBPE C.A. NO. 25035 Phone: 321.690.1786 Fax: 321.690.1789 Email: info@ptc-corp.com	SCALE: N.T.S.	DRAWING NO: NAN0011
	REV: D	SHEET: 7 OF 10

Robert J. Amoruso, P.E.
FL P.E. No. 49752
[signature] 2/26/14

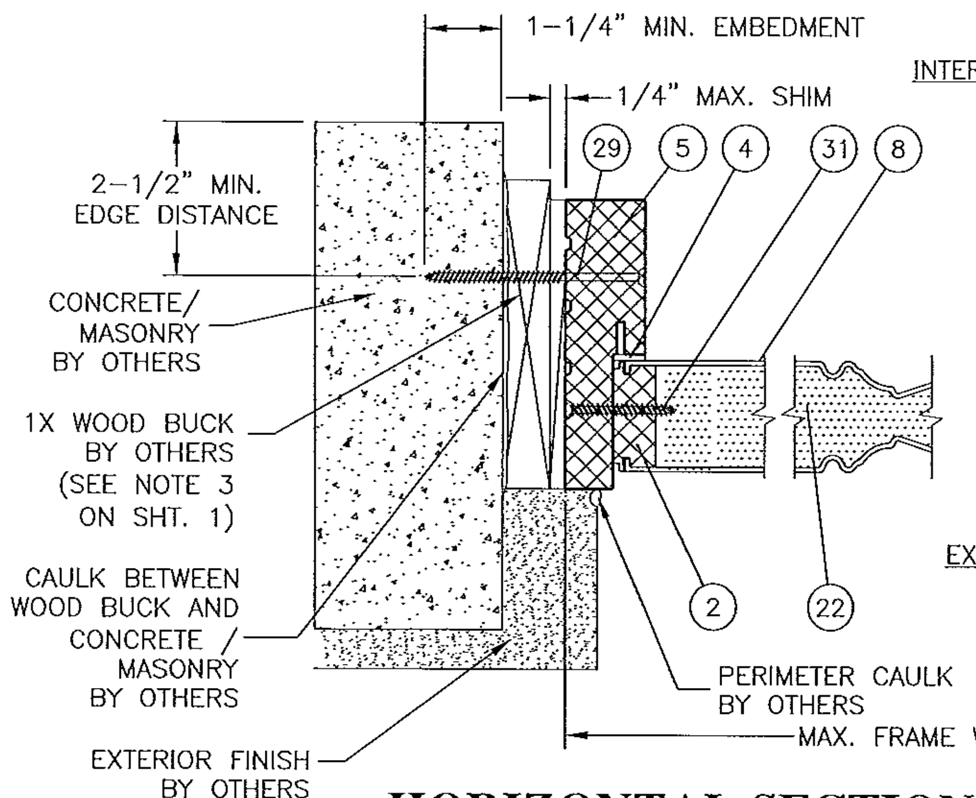

(K) HORIZONTAL SECTION
CONCRETE / MASONRY SUBSTRATE
OPAQUE SIDELITE

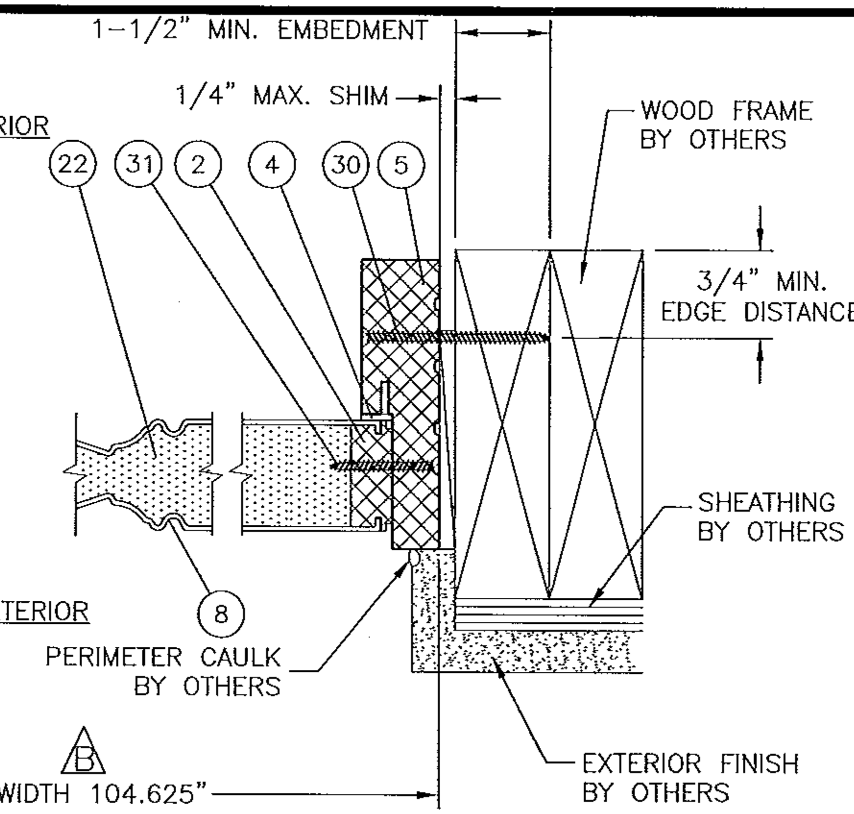

(L) HORIZONTAL SECTION
WOOD FRAME SUBSTRATE
OPAQUE SIDELITE

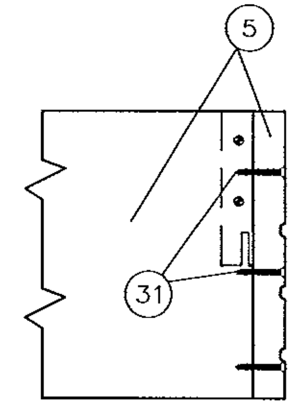

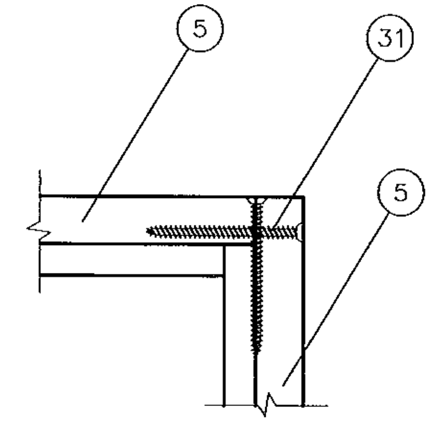

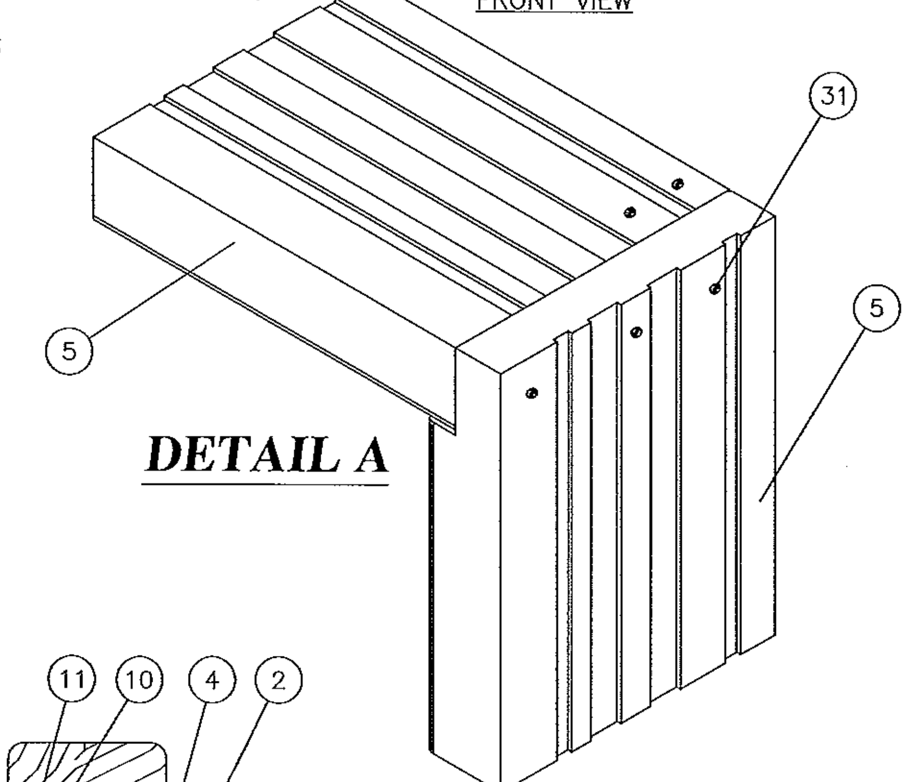

DETAIL A

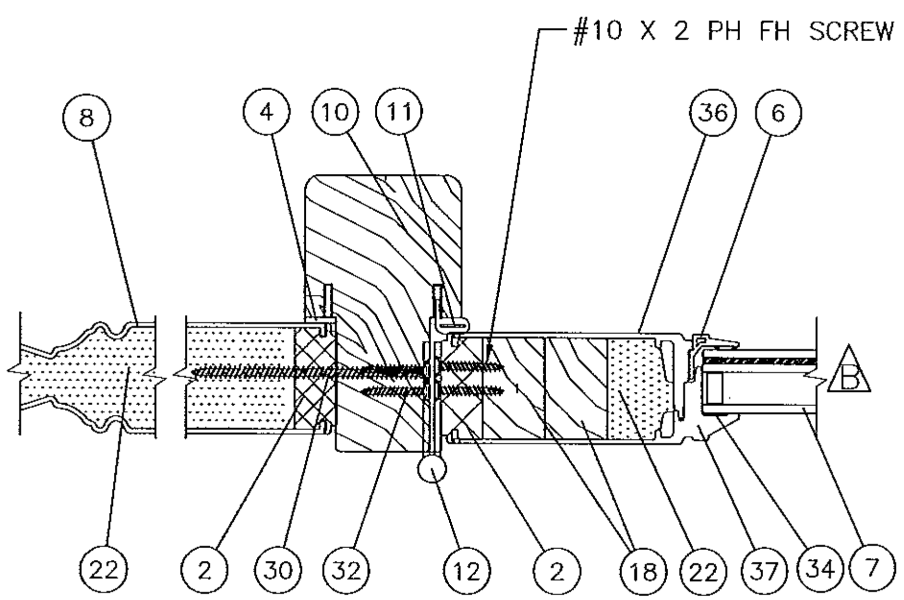

(P) HORIZONTAL SECTION
OPAQUE SIDELITE / DOOR PANEL (A)

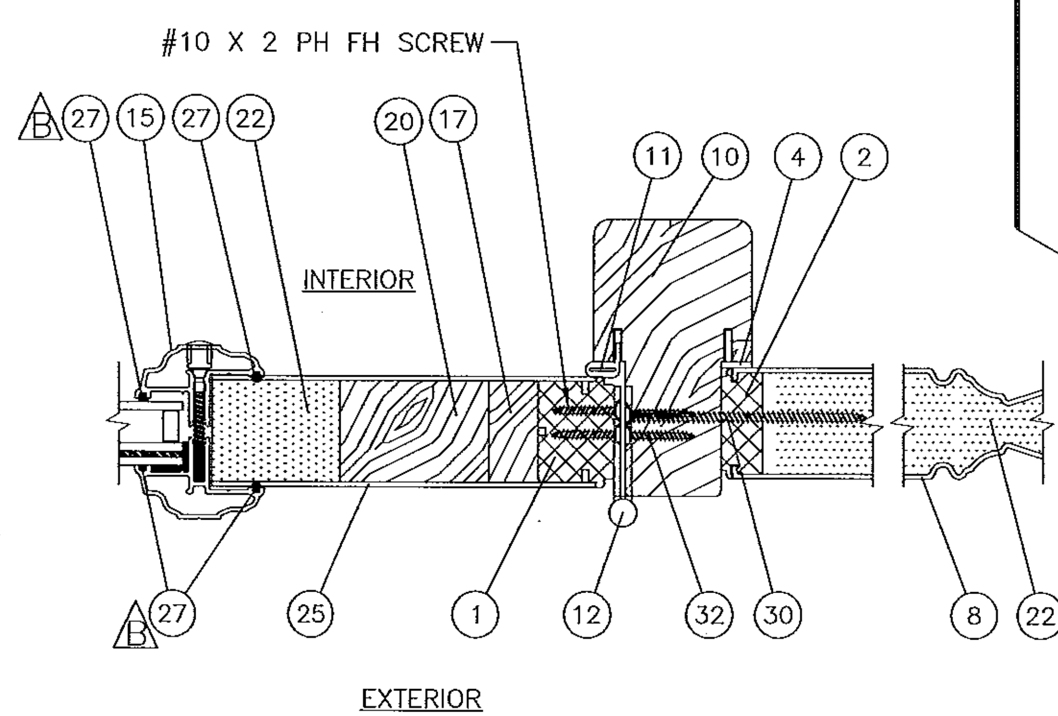

(Q) HORIZONTAL SECTION
DOOR PANEL (B) / OPAQUE SIDELITE

PRODUCT REVISED
as complying with the Florida Building Code
Acceptance No 14-0305.04
Expiration Date 3/14/19
By Ishaq I. Chanda
Miami Dade Product Control

PROJECT NO. 414-0107

REV	DESCRIPTION	DATE	BY
D	NOA RENEWAL	02/26/14	RJA
C	UPDATE TO 2010 FBC	04/25/12	TJH
B	PER MIAMI DADE 01/06/09	1/15/09	SMC

NAN YA PLASTICS CORP.
8989 NORTH LOOP EAST
HOUSTON, TX 77029

DISTINCTION DOUBLE IMPACT ENTRY O.S. DOOR W/ SIDELITES
HORIZONTAL SECTIONS & CORNER DETAILS

PREPARED BY: | DRAWN BY: | DATE: 04/21/08
SCALE: N.T.S. | DRAWING NO: NAN0011
REV: D | SHEET: 8 OF 10

PTC PRODUCT DESIGN GROUP, LLC
PO BOX 520775
LONGWOOD, FLORIDA 32752
FBPE C.A. NO. 7[illegible]
Phone: 321.690.1788
Fax: 321.690.1789
Email: info@ptc-corp.com

Robert J. Amoruso, P.E.
FL P.E. No. 49752
2/26/14

BILL OF MATERIALS

ITEM NO.	PART NO.	QUANTITY	DESCRIPTION	MATERIAL	VENDOR
1	XXX	3	1 5/32" STILE	FOAM PVC	NANYA PLASTICS
2	XXX	8	5/8" STILE	FOAM PVC	NANYA PLASTICS
3	XXX	1	1 3/4" TOP/BOTTOM RAIL INSERT	FOAM PVC	NANYA PLASTICS
4	XXX	AS REQ'D.	SILICONE SEALANT	-----	-----
5	XXX	3	FRAME HEAD & JAMB	FOAM PVC	NANYA PLASTICS
6	XXX	AS REQ'D.	1" GLAZING BEAD	RIGID PVC	NANYA PLASTICS
7	XXX	-----	1/8" TEMPERED GLASS, 0.540" AIR SPACE (A1-S SPACER, 1/8" ANNEALED GLASS, 0.090" PVB INTERLAYER BY SOLUTIA, 1/8" ANNEALED GLASS A	-----	CARDINAL
8	XXX	-----	SMC 00S OPAQUE SIDELITE SKIN (Fy MIN. = 11,000 PSI) A	FIBERGLASS SKIN A	NAN YA PLASTICS A
9	XXX	3	SILL ASSY.	ALUMINUM	ENDURA
10	XXX	2	MULLION	PINE WOOD & FLOUR	ENDURA
11	XXX	AS REQ'D.	Q-LON 650 WEATHERSTRIPPING	FOAM SILICONE PE FILM	Q-LON
12	-----	4	4" X 4" HINGE	STEEL	MICOTA
13	XXX	2	DOOR SWEEP	RIGID PVC CO-EX	ENDURA
14	XXX	2	CORNER PAD	FOAM SILICONE PE FILM	DOW-TECH PLASTICS
15	XXX	AS REQD.	ODL HURRICANE IMPACT LIGHT FRAME SYSTEM (PER CURRENT NOA) A	ALUMINUM	ODL
16	XXX	2	OUTSWING PANEL TRIM	ALUMINUM, PVC	ENDURA
17	XXX	2	REINFORCEMENT 25/32" X 1 19/32"	WHITE PINE	-----
18	XXX	2	REINFORCEMENT 31/32" X 1 19/32"	WHITE PINE	-----
19	XXX	1	DEAD BOLT-KEYED	-----	KWIK-SET
20	XXX	2	REINFORCEMENT 2 11/32" X 1 19/32" A	WHITE PINE	-----
21	XXX	1	HURRICANE ASTRAGAL WITH SHOOT BOLT A	ALUMINUM, STEEL, PVC	ENDURA
22	XXX	AS REQD.	PHENOLIC FOAM	-----	NANYA PLASTICS
23	XXX	2	SMC S12P (M) SIDELITE SKIN (Fy MIN. = 11,000 PSI) A	FIBERGLASS SKIN	NANYA PLASTICS A
24	XXX	2	SMC S14P (F) SIDELITE SKIN (Fy MIN. = 11,000 PSI) A	FIBERGLASS SKIN	NANYA PLASTICS A
25	XXX	2	SMC OOP DOOR SKIN (Fy MIN. = 11,000 PSI) A	FIBERGLASS SKIN	NANYA PLASTICS A
26	XXX	1	SIDELIGHT BASE SUPPORT	-----	-----
27	XXX	1	REDI-SEAL GLAZING COMPOUND BY ODL A	SILICONE A	ODL A
28	XXX	1	DOOR KEYED ENTRY LATCH SET	-----	KWIK-SET
29	-----	-----	1/4" ITW TAPCON W/ 1-1/4" MIN. EMBEDMENT	STEEL	ITW A
30	-----	12	#12 X 3" PH FL HD SCREW	STEEL	-----
31	-----	14	#10 X 2 1/2" PH LF HD SCREW	STEEL	-----
32	-----	12	#10 X 1 1/2" PH FL HD SCREW	STEEL	-----
33	-----	14	#10 X 1" PH FL HD SCREW	STEEL	-----
34	-----		DOW CORNING 995 SILICONE SEALANT	SILICONE	DOW CORNING
35	-----		#8 X 1" PH FL HD SCREW	-----	-----
36	XXX	2	SMC 14P (M) DOOR SKIN (Fy MIN. = 11,000 PSI) A	FIBERGLASS SKIN	NAN YA PLASTICS
37	XXX	2	SMC 12P (F) DOOR SKIN (Fy MIN. = 11,000 PSI) A	FIBERGLASS SKIN	NAN YA PLASTICS
37	XXX		1/4" DIA. HOLLOW BULB SEAL - ADHESIVE BACKED A	-----	-----

PRODUCT REVIEWED
as complying with the Florida Building Code
Acceptance No 14-0345.04
Expiration Date 3/4/16
By [signature]
Miami Dade Product Control

PROJECT NO. 414-0107

REV	DESCRIPTION	DATE	BY
D	NOA RENEWAL	02/26/14	RJA
C	UPDATE TO 2010 FBC	04/25/12	TJH
B	PER MIAMI DADE 01/06/09	1/15/09	SMC

NAN YA PLASTICS CORP.
8989 NORTH LOOP EAST
HOUSTON, TX 77029

DISTINCTION DOUBLE IMPACT ENTRY O.S. DOOR W/ SIDELITES
BILL OF MATERIALS

DATE: 04/21/08
DRAWN BY:
DRAWNING NO: NAN0011
SCALE: N.T.S.
SHEET: 9 OF 10
REV: D

PREPARED BY:
PTC PRODUCT DESIGN GROUP, LLC
P.O. BOX 520775
LONGWOOD, FLORIDA 32752
FBPE C.A. NO. 26535
Phone: 321.690.1788
Fax: 321.690.1789
Email: info@ptc-corp.com

Robert J. Amoruso, P.E.
FL P.E. No. 49752

2/26/14

(1) 1 5/32" STILE

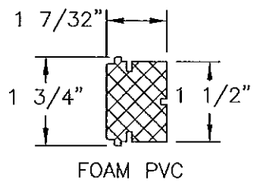

(2) 5/8" STILE

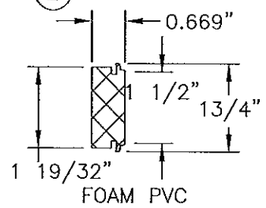

(3) TOP & BOTTOM RAIL INSERT

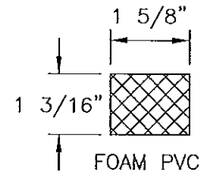

(5) FRAME HEAD & JAMB

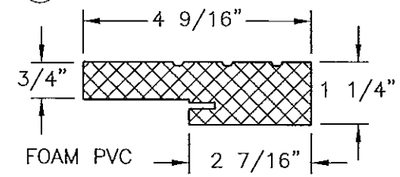

(6) GLAZING BEAD 0.059" TYP. WALL THICKNESS

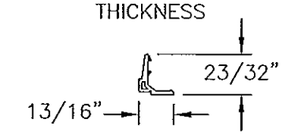

RIGID ARC

(8) SMC14P SIDELITE SKIN 0.075" TYP. WALL THICKNESS (OPAQUE SKIN DOES NOT HAVE MALE OR FEMALE CHARACTERISTICS)

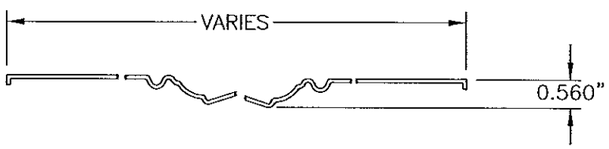

FIBERGLASS
Fy MIN. = 11,000 PSI

(9) THRESHOLD 0.050" TYP. WALL THICKNESS

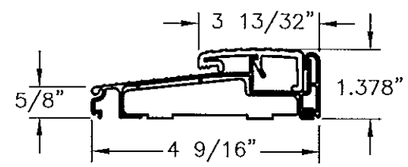

(10) MULLION ENDURA FAT BOY

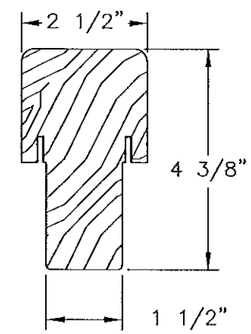

PINE

(13) DOOR BOTTOM

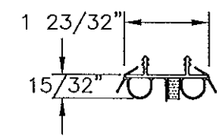

(14) CORNER PAD

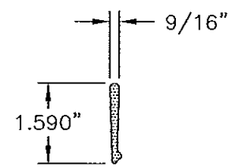

(15) ODL LITE KIT 0.065" TYP. WALL THICKNESS

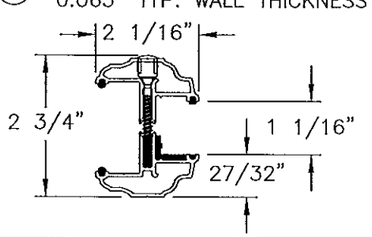

(16) OUTSWING PANEL TRIM 0.063" TYP. WALL THICKNESS

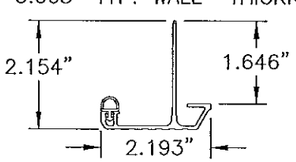

(17) REINFORCEMENT

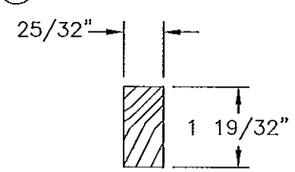

PINE

(18) REINFORCEMENT

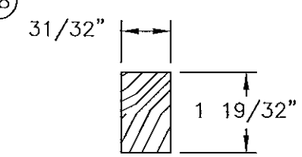

PINE

(20) REINFORCEMENT

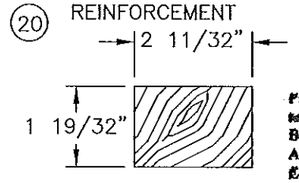

PINE

PRODUCT REVISED
to complying with the Florida Building Code
Acceptance No 14-0305.04
Expiration Date MAR 04, 2019
By
Miami Dade Product Control

(21) ASTRAGAL 0.070" TYP. WALL THICKNESS

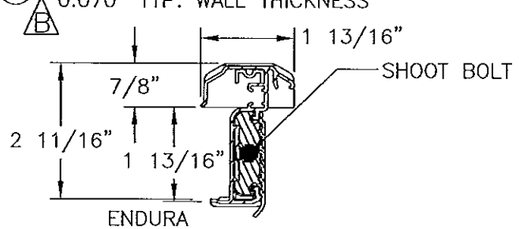

(23) SMC12P MALE SIDELITE SKIN 0.075" TYP. WALL THICKNESS

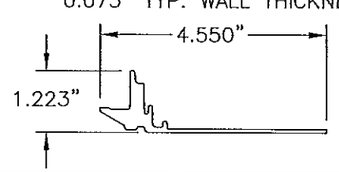

FIBERGLASS
Fy MIN=
11,000 PSI

(24) SMC14P FEMALE SIDELITE SKIN 0.075" TYP. WALL THICKNESS

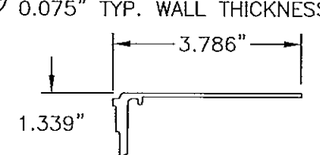

FIBERGLASS
Fy MIN=
11,000 PSI

(26) SIDELITE BASE SUPPORT

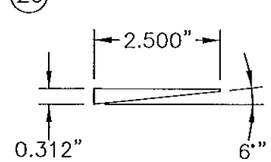

(36) SMC12P FEMALE DOOR SKIN 0.075" TYP. WALL THICKNESS

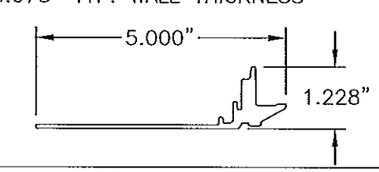

FIBERGLASS
Fy MIN=
11,000 PSI

(36) SMC14P MALE DOOR SKIN 0.075" TYP. WALL THICKNESS

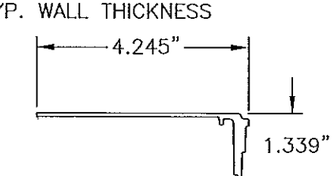

FIBERGLASS
Fy MIN=
11,000 PSI

REV	DESCRIPTION	DATE	BY
D	NOA RENEWAL	02/26/14	RJA
C	UPDATE TO 2010 FBC	04/25/12	TJH
B	PER MIAMI DADE 01/06/09	1/15/09	SMC

PROJECT NO. 414-0107

NAN YA PLASTICS CORP.
8989 NORTH LOOP EAST
HOUSTON, TX 77029

DISTINCTION DOUBLE IMPACT ENTRY O.S. DOOR W/ SIDELITES COMPONENTS

DATE: 04/21/08
DRAWN BY: BB
DRAWNING NO: NAN0011
SCALE: N.T.S.
SHEET: 10 OF 10
REV: D

PREPARED BY:

PTC PRODUCT DESIGN GROUP, LLC
PO BOX 520775
LONGWOOD, FLORIDA 32752
FRPE C.A. NO. 29045
Phone: 321.690.1788
Fax: 321.690.1789
Email: info@ptc-corp.com

Robert J. Amoruso, P.E.
FL P.E. No. 49752