MIAMI-DADE COUNTY
PRODUCT CONTROL SECTION
11805 SW 26 Street, Room 208
Miami, Florida 33175-2474
T (786) 315-2590 F (786) 315-2599
www.miamidade.gov/economy

DEPARTMENT OF REGULATORY AND ECONOMIC RESOURCES (RER)
BOARD AND CODE ADMINISTRATION DIVISION

# NOTICE OF ACCEPTANCE (NOA)

**SIW Impact Windows, LLC**
**975 S. Congress Ave. # 102**
**Delray Beach, Florida 33445**

**SCOPE:**

This NOA is being issued under the applicable rules and regulations governing the use of construction materials. The documentation submitted has been reviewed and accepted by Miami-Dade County RER -Product Control Section to be used in Miami Dade County and other areas where allowed by the Authority Having Jurisdiction (AHJ).

This NOA shall not be valid after the expiration date stated below. The Miami-Dade County Product Control Section (In Miami Dade County) and/or the AHJ (in areas other than Miami Dade County) reserve the right to have this product or material tested for quality assurance purposes. If this product or material fails to perform in the accepted manner, the manufacturer will incur the expense of such testing and the AHJ may immediately revoke, modify, or suspend the use of such product or material within their jurisdiction. RER reserves the right to revoke this acceptance, if it is determined by Miami-Dade County Product Control Section that this product or material fails to meet the requirements of the applicable building code.

This product is approved as described herein, and has been designed to comply with the Florida Building Code, including the High Velocity Hurricane Zone.

**DESCRIPTION: Series "500-11" Aluminum Outswing Doors w/wo Sidelite.**

**APPROVAL DOCUMENT:** Drawing No. **W13-69 Rev B**, titled "Series 500-11 Alum Outswing Entrance Door (L.M.I.)", sheets 1 through 14 of 14, dated 12-31-13 and last revised on Jul 31, 2014, prepared by Al-Farooq Corporation, signed and sealed by Javad Ahmad, P. E., bearing the Miami-Dade County Product Control Approval stamp with the Notice of Acceptance number and expiration date by the Miami-Dade County Product Control Section.

**MISSILE IMPACT RATING: Large and Small Missile Impact**

**Limitations:**

1. See DP tables for X & XX in sheets **2** & **3**, O (Narrow or Wide stile) in sheet **4** and X & XX doors mulled w/ Sidelites in **5** & **6**. Lower DP from door or sidelites may control.
2. Max single **door** leaf width mulled with sidelite in sheet **5** & **6**, shall not exceed = 36-91/6".
3. Double doors w/**ADA** threshold is **not** rated for water Resistance* and limited to DP=+*/- **50** PSF (See sheet 7).
3. Glass lites wider than 36" shall have two setting blocks per FBC requirements.

**LABELING:** Each unit shall bear a permanent label with the manufacturer's name or logo, city, state and series and following statement: "Miami-Dade County Product Control Approved", noted herein.

**RENEWAL** of this NOA shall be considered after a renewal application has been filed and there has been no change in the applicable building code negatively affecting the performance of this product.

**TERMINATION** of this NOA will occur after the expiration date or if there has been a revision or change in the materials, use, and/or manufacture of the product or process. Misuse of this NOA as an endorsement of any product, for sales, advertising or any other purposes shall automatically terminate this NOA. Failure to comply with any section of this NOA shall be cause for termination and removal of NOA.

**ADVERTISEMENT:** The NOA number preceded by the words Miami-Dade County, Florida, and followed by the expiration date may be displayed in advertising literature. If any portion of the NOA is displayed, then it shall be done in its entirety.

**INSPECTION:** A copy of this entire NOA shall be provided to the user by the manufacturer or its distributors and shall be available for inspection at the job site at the request of the Building Official.

This NOA consists of this page 1 and evidence pages E-1 & E-2, as well as approval document mentioned above.

The submitted documentation was reviewed by **Ishaq I. Chanda, P.E.**

MIAMI-DADE COUNTY APPROVED

8/11/14

## NOTICE OF ACCEPTANCE: EVIDENCE SUBMITTED

**A. DRAWINGS**

1. Manufacturer's die drawings and sections.
2. Drawing No. **W13-69 Rev B**, titled "Series 500-11 Alum Outswing Entrance Door (L.M.I.)", sheets 1 through 14 of 14, dated 12-31-13 and last revised on Jul 31, 2014, prepared by Al-Farooq Corporation, signed and sealed by Javad Ahmad, P.E.

**B. TESTS**

1. Test reports on: 1) Air Infiltration Test, per FBC, TAS 202-94
   2) Uniform Static Air Pressure Test, Loading per FBC TAS 202-94
   3) Water Resistance Test, per FBC, TAS 202-94
   4) Large Missile Impact Test per FBC, TAS 201-94
   5) Cyclic Wind Pressure Loading per FBC, TAS 203-94
   6) Forced Entry Test, per FBC 2411 3.2.1, TAS 202-94

   Along with installation diagram of Single Aluminum Outswing doors w/ sidelite, prepared by Black Water Testing Inc., Test reports # **BT-SIW-13-005, BT-SIW-13-005(2), BT-SIW-13-007, BT-SIW-13-007(2), BT-SIW-13-009** and **BT-SIW-13-009(2)** dated OCT 29, 2013 and December 11, 2013, all signed and sealed by Yamil Kuri, P.E.
   Note: The test reports **#BT-SIW-13-005(2), #BT-SIW-13-007(2)** and **#BT-SIW-13-009(2)** have been revised by an addendum letter dated 05/09/14, issued by Black Water Testing Inc., signed and sealed by Yamil Kuri, P.E.
2. Additional Reference Test reports on: 1) Air Infiltration Test, per FBC, TAS 202-94
   2) Uniform Static Air Pressure Test, Loading per FBC TAS 202-94
   3) Water Resistance Test, per FBC, TAS 202-94
   4) Large Missile Impact Test per FBC, TAS 201-94
   5) Cyclic Wind Pressure Loading per FBC, TAS 203-94
   6) Forced Entry Test, per FBC 2411 3.2.1, TAS 202-94

   Along with installation diagram of aluminum Outswing doors w/wo sidelite and transom, prepared by Black Water Testing Inc., Test reports **#BT-SIW-13-001** and **BT-SIW-13-006** dated June 10, 2013 and December 11, 2013, both signed and sealed by Yamil Kuri, P.E.
   Note: The above test reports have been revised by an addendum letter dated 05/09/14, issued by Black Water Testing Inc., signed and sealed by Yamil Kuri, P.E.

   Along with installation diagram of Single Aluminum Outswing doors w/ sidelite, prepared by Black Water Testing Inc., Test reports # **BT-SIW-13-010, BT-SIW-13-010(2), BT-SIW-13-011, BT-SIW-13-011(2), BT-SIW-13-012** and **BT-SIW-13-013** dated OCT 29, 2013 and December 11, 2013, all signed and sealed by Yamil Kuri, P.E.
   Note: The test reports **#BT-SIW-13-010(2)** and **#BT-SIW-13-011(2)** have been revised by an addendum letter dated 05/09/14, issued by Black Water Testing Inc., signed and sealed by Yamil Kuri, P.E

   Along with installation diagram of aluminum Inswing / Outswing doors w/wo sidelite and transom, prepared by Hurricane Engineering and Testing, Test Report No. HETI 07-4339, HETI 07-4371, HETI 07-4371, HETI 07-4372, HETI 07-4373and HETI 07-4374 dated 01/03/08, HETI-08-2184A & B dated 10/01/08, HETI 09-2572A, HETI 09-2573 dated June 30, 2009, all signed and sealed by Candido Font, P.E.

Ishaq I. Chanda, P.E.
Product Control Examiner
NOA No. 14-0305.07
Expiration Date: May 22, 2018
Approval Date: August 08, 2014

## NOTICE OF ACCEPTANCE: EVIDENCE SUBMITTED

### C. CALCULATIONS

1. Anchor verification calculations complying with FBC2014, prepared by Al Farooq Corporation, dated FEB 17, 2014, Jul 11, 2014 and last revised on Jul 31, 2014, signed and sealed by Javad Ahmad, P.E.
2. Glazing complies w/ ASTME-1300-04 & -09

### D. QUALITY ASSURANCE

1. Miami Dade Department of Regulatory and Economic Resources (RER).

### E. MATERIAL CERTIFICATIONS

1. Notice of Acceptance No. **11-0624.02** issued to E.I. DuPont DeNemours & Co., Inc. for their "**DuPont Sentry Glass ® interlayer**", expiring on 01/14/17.

### F. STATEMENTS

1. Statement letter of conformance to FBC 2014 (**5th Edition**) and letter of no financial interest, prepared by Al Farooq Corporation, dated 07/11/14, signed and sealed by Javad Ahmad, P.E.
2. Lab compliance as part of the above referenced test reports.
3. Addendum letter dated 05/09/14 ref **#BT-SIW-13-005(2)**, **BT-SIW-13-007(2)** and **BT-SIW-13-009(2)**, issued by Black Water Testing Inc., signed and sealed by Yamil Kuri, P.E.
4. Addendum letter dated 05/09/14 ref **#BT-SIW-13-010(2)** and **BT-SIW-13-011(2)**, issued by Black Water Testing Inc., signed and sealed by Yamil Kuri, P.E.
5. Addendum letter dated 05/09/14 ref **#BT-SIW-13-001** and **BT-SIW-13-006**, issued by Black Water Testing Inc., signed and sealed by Yamil Kuri, P.E.
6. Addendum letter ref HETI-07-4374 dated May 06, 2008, issued by HETI, signed and sealed by Candido Font, P.E.

### G. OTHER

1. Ref NOA(s) # 13-0220.06 & #14-0305.06 and #14-0220.08.
2. Test proposal dated 08/13/13 and 05/23/13 approved by RER

Ishaq I. Chanda

**Ishaq I. Chanda, P.E.**
**Product Control Examiner**
**NOA No. 14-0305.07**
**Expiration Date: May 22, 2018**
**Approval Date: August 08, 2014**

THESE DOORS ARE RATED FOR LARGE & SMALL MISSILE IMPACT.
SHUTTERS ARE NOT REQUIRED.

## SERIES 500-11
## ALUMINUM OUTSWING ENTRANCE DOOR

APPROVAL APPLIES TO SINGLE (X) AND DOUBLE (XX) LEAF DOORS WITH OR WITHOUT SIDELITES.
SIDE LITES CAN BE ON ONE OR BOTH SIDES OF DOOR.
SEE SHEETS 2 & 3 FOR SINGLE OR DOUBLE DOORS DESIGN LOAD CAPACITIES.
SEE SHEET 4 FOR SINGLE STATIONARY PANEL LOAD CAPACITIES.
SEE SHEETS 5 & 6 FOR SIDELITE TO DOOR COMBINATIONS.
THE LOWEST VALUE FROM DOOR OR SIDELITE CAPACITY CHARTS WILL APPLY TO ENTIRE SYSTEM.

---

DOORS APPROVED FOR INSTALLATIONS WHERE WATER INFILTRATION RESISTANCE IS REQUIRED.
SEE SHEET 7 FOR LIMITATIONS.

---

THIS PRODUCT HAS BEEN DESIGNED AND TESTED TO COMPLY WITH THE REQUIREMENTS OF THE FLORIDA BUILDING CODE INCLUDING HIGH VELOCITY HURRICANE ZONE (HVHZ).

1BY OR 2BY WOOD BUCKS BY OTHERS, MUST BE ANCHORED PROPERLY TO TRANSFER LOADS TO THE STRUCTURE.

ANCHORS SHALL BE AS LISTED, SPACED AS SHOWN ON DETAILS, ANCHORS EMBEDMENT TO BASE MATERIAL SHALL BE BEYOND WALL DRESSING OR STUCCO.

ANCHORING OR LOADING CONDITIONS NOT SHOWN IN THESE DETAILS ARE NOT PART OF THIS APPROVAL.

A LOAD DURATION INCREASE IS USED IN DESIGN OF ANCHORS INTO WOOD ONLY.

MATERIALS INCLUDING BUT NOT LIMITED TO STEEL/METAL SCREWS, THAT COME INTO CONTACT WITH OTHER DISSIMILAR MATERIALS SHALL MEET THE REQUIREMENTS OF THE FLORIDA BLDG. CODE.

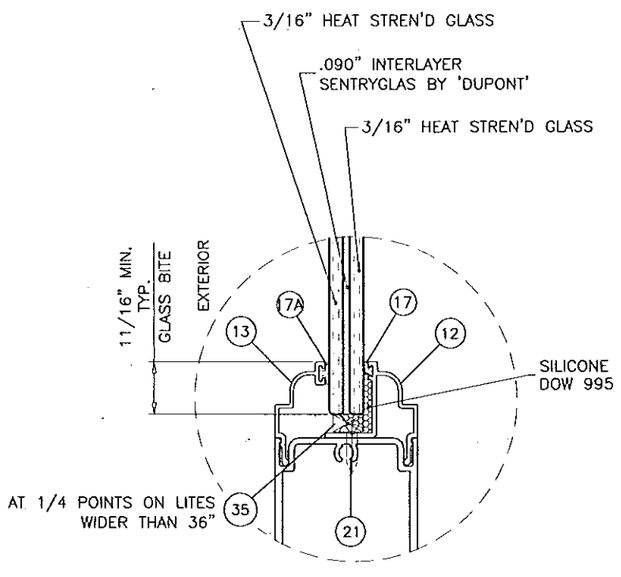


GLAZING DETAIL
7/16" OVERALL LAM. GLASS

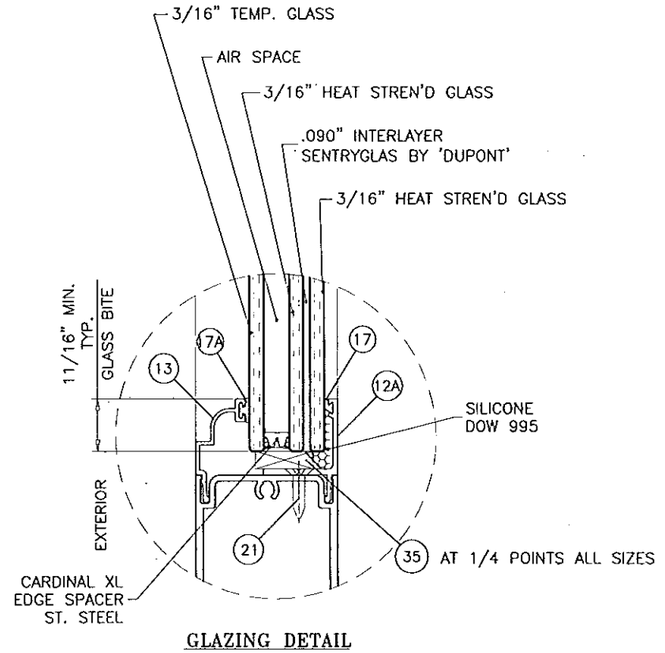


GLAZING DETAIL
1" OVERALL INSUL. LAM. GLASS

Approved as complying with the Florida Building Code
Date 8/4/2014
NOA# 14-0306.03
Miami-Dade Product Control
By

Engr: JAVAD AHMAD
CIVIL
FLA. PE # 70592
C.A.N. 3538
JUL 31 2014


AL-FAROOQ CORPORATION
ENGINEERS & PRODUCT DEVELOPMENT
1235 S.W. 87 AVE
MIAMI, FLORIDA 33174
TEL (305) 264-8100 FAX (305) 262-6978
COMP-ANL\W13-62SIW


SERIES 500-11 ALUM OUTSWING ENTRANCE DOOR (L.M.I.)

SIW IMPACT WINDOWS, LLC.
975 S. CONGRESS AVE. #102
DELRAY BEACH, FL. 33445
TEL. (561) 274-9392 FAX. (561) 274-9262

revisions:

| no | date | by | description |
|---|---|---|---|
| A | 07.10.14 | RER | REV. PER COMMENTS |
| B | 07.31.14 | RER | REV. PER COMMENTS |

date: 12-31-13
scale: 3/8" = 1"
dr. by: TARIQ
chk. by:

drawing no.
W13-69

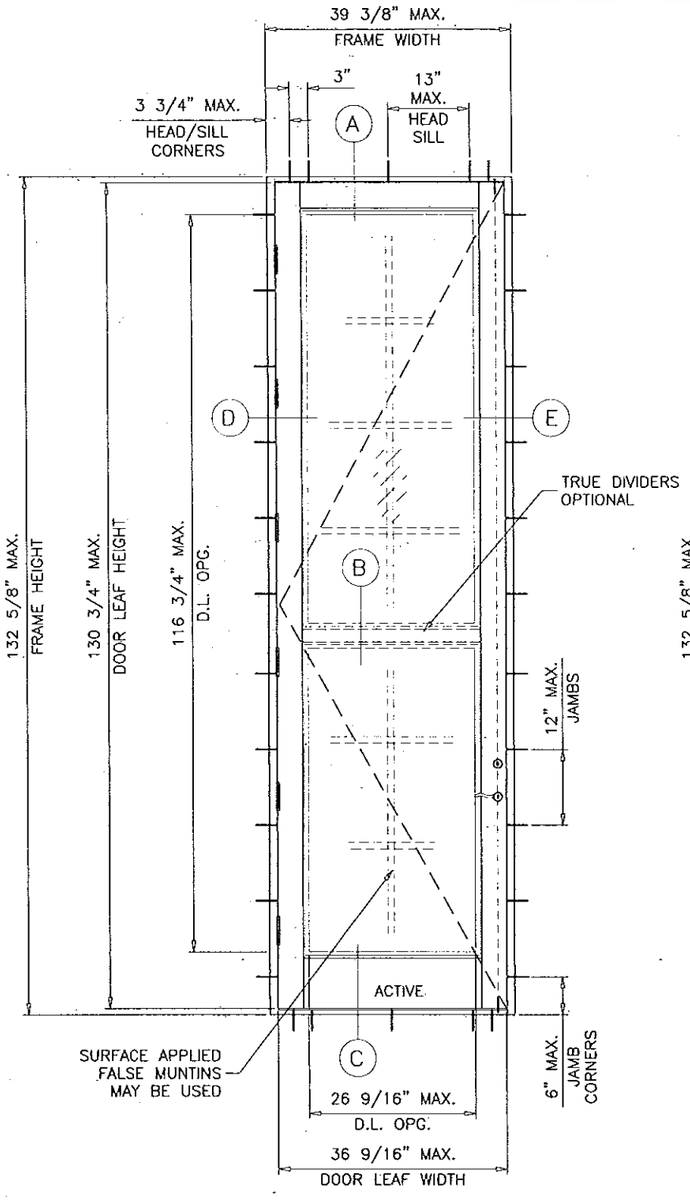


TYPICAL ELEVATION

( X )

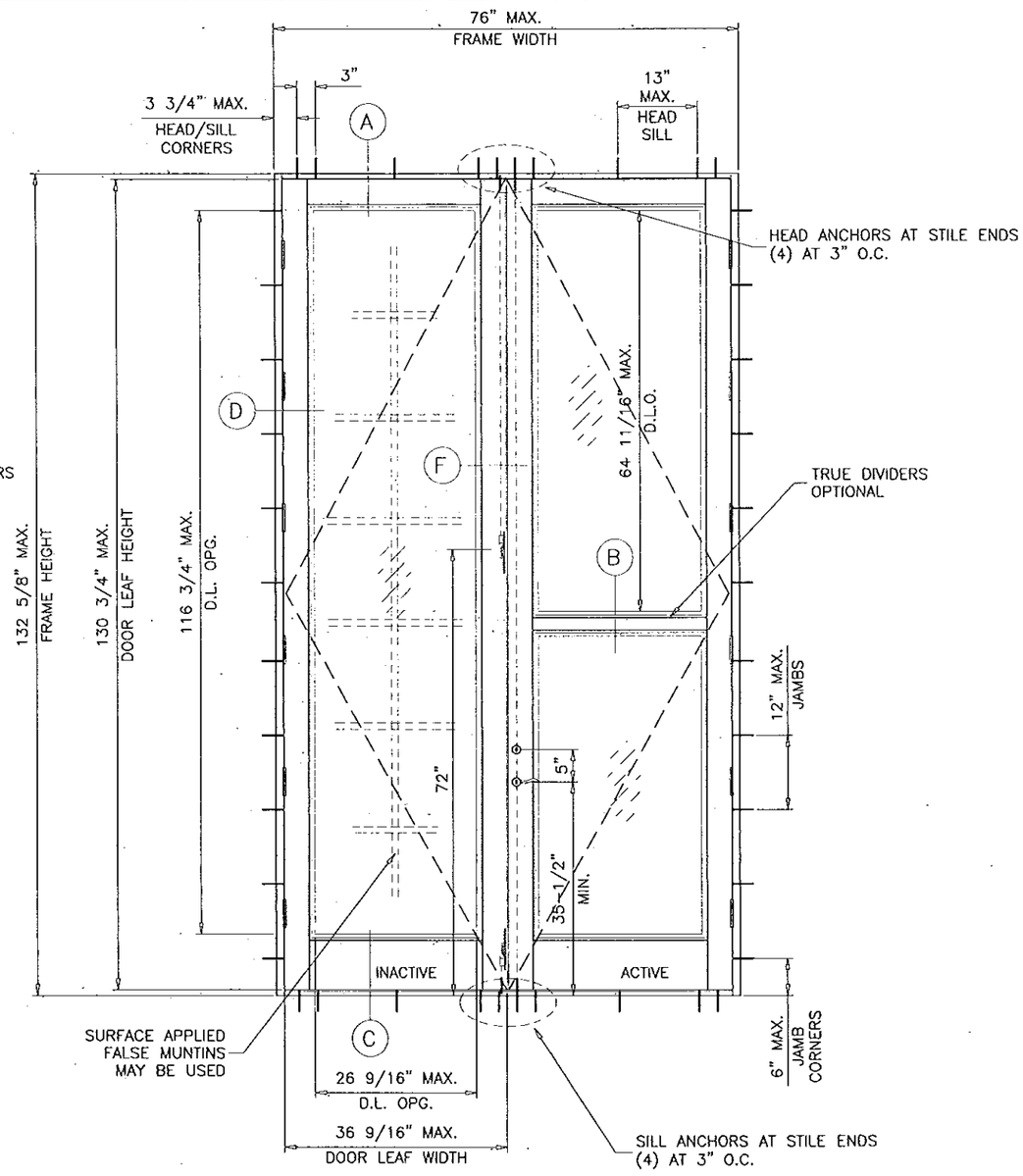


TYPICAL ELEVATION

( XX )

DOORS WITH STANDARD THRESHOLD

DOOR OPTIONS

| DOORS LOAD CAPACITY - PSF SINGLE DOORS (X) | | | |
|---|---|---|---|
| DOOR DIMS. | | STD. THRESHOLD | |
| FRAME WIDTH | FRAME HEIGHT | EXT.(+) | INT.(-) |
| 39-3/8" | 132-5/8" | 50.0 | 50.0 |

| DOORS LOAD CAPACITY - PSF DOUBLE DOORS (XX) | | | |
|---|---|---|---|
| DOOR DIMS. | | STD. THRESHOLD | |
| FRAME WIDTH | FRAME HEIGHT | EXT.(+) | INT.(-) |
| 76" | 132-5/8" | 50.0 | 50.0 |

NOTE:
VERIFY COMPLIANCE WITH EGRESS LIMITATIONS WHERE REQUIRED.

DOOR D.L.O. DIMS.

D.L.O. HEIGHT = FRAME HEIGHT - 15.875"
D.L.O. WIDTH (X DOORS) = FRAME WIDTH - 12.625"
D.L.O. WIDTH (XX DOORS) = (FRAME WIDTH - 22.875)/2

Approved as complying with the Florida Building Code
Date 08/08/14
NOA# 14-0305.07
Miami Dade Product Control
By Ishaq I. Chank

NOTE:
GLASS CAPACITIES ON THIS SHEET ARE BASED ON ASTM E1300-09 (3 SEC. GUSTS) AND FLORIDA BUILDING COMMISSION DECLARATORY STATEMENT DCA05-DEC-219

Engr: JAVAD AHMAD
CIVIL
FLA. PE # 70592
C.A.N. 3538
JUL 31 2014


AL-FAROOQ CORPORATION
ENGINEERS & PRODUCT DEVELOPMENT
1235 S.W. 87 AVE
MIAMI, FLORIDA 33174
TEL (305) 264-8100 FAX. (305) 262-6978


COMP-ANL\W13-62SIW

SERIES 500-11 ALUM OUTSWING ENTRANCE DOOR (L.M.I.)


SIW IMPACT WINDOWS, LLC.
975 S. CONGRESS AVE. #102
DELRAY BEACH, FL. 33445
TEL. (561) 274-9392 FAX. (561) 274-9262


revisions:

| no | date | by | description |
|---|---|---|---|
| A | 07.10.14 | | NO CHANGE THIS SHEET |
| B | 07.31.14 | | REV. PER RER COMMENTS |

date: 12-31-13
scale: 1/2"=1'-0"
dr. by: TARIQ
chk. by:

drawing no. W13-69

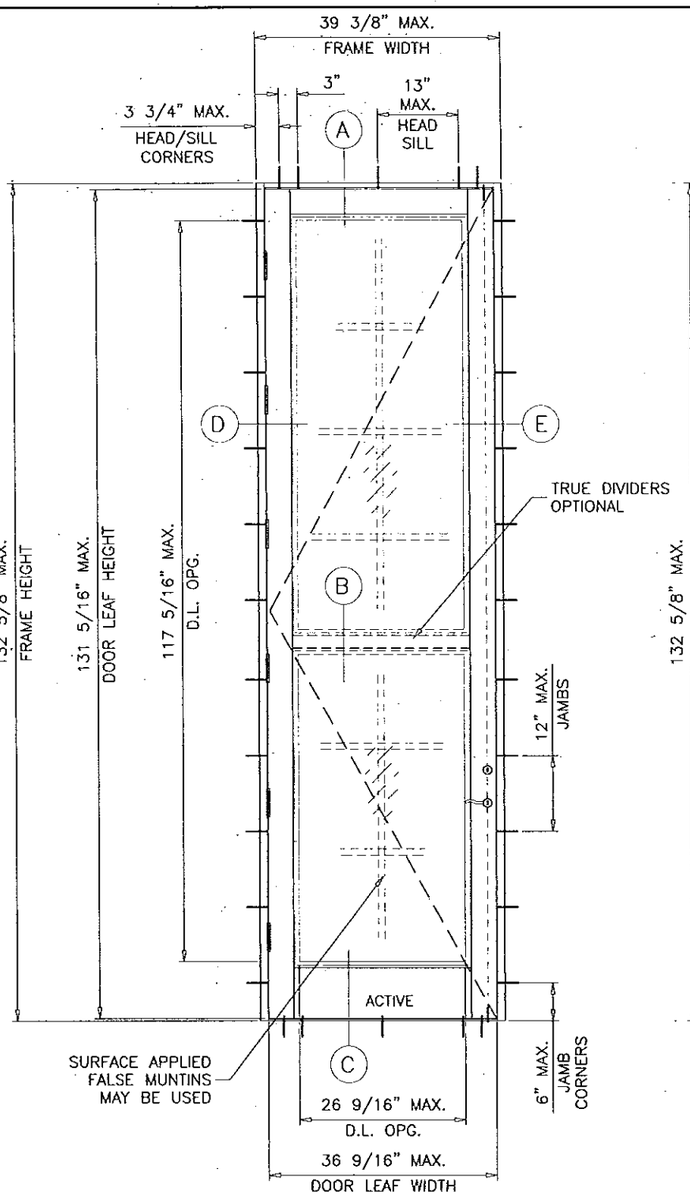


TYPICAL ELEVATION

( X )

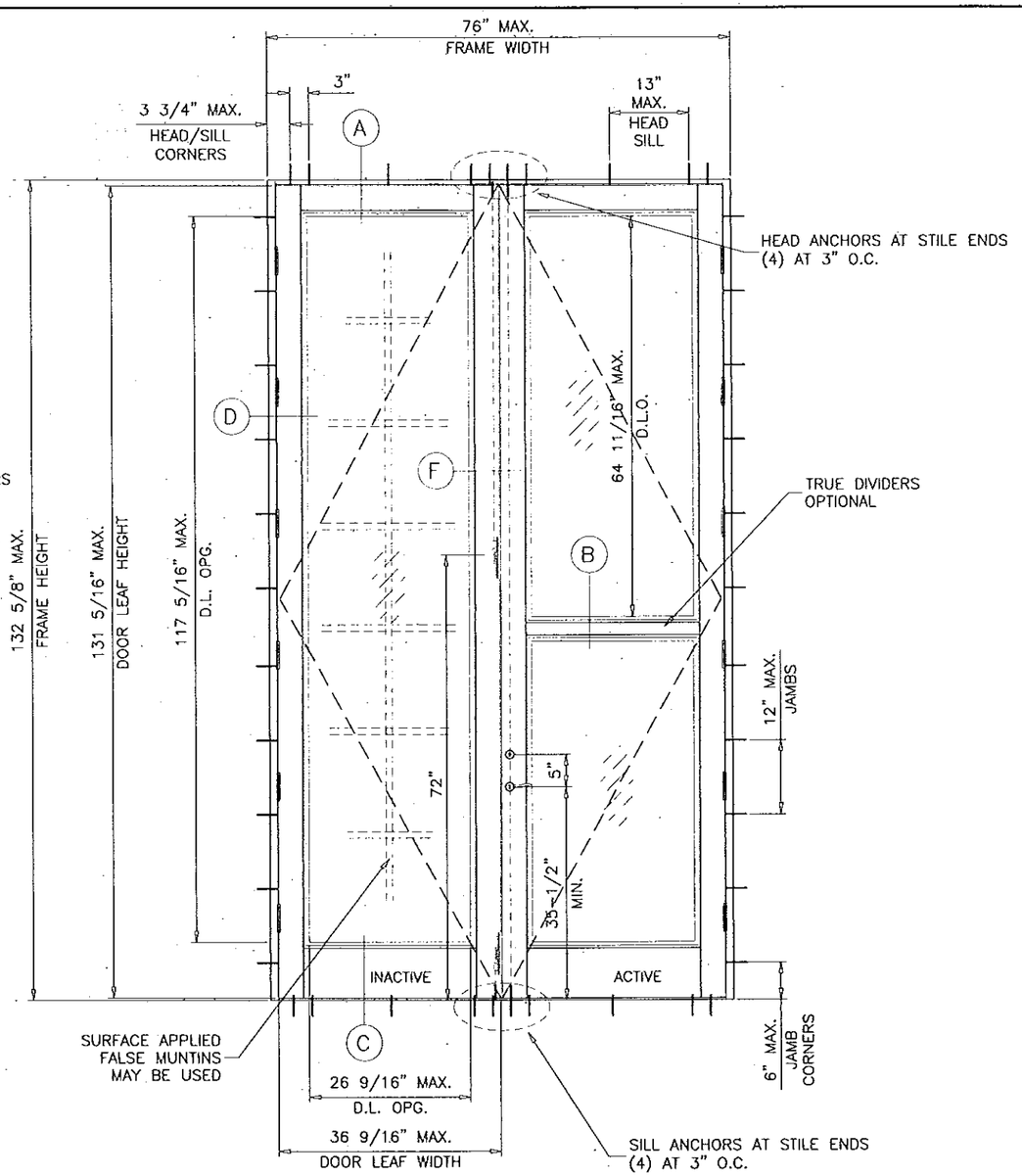


TYPICAL ELEVATION

( XX )

## DOOR OPTIONS

| DOORS LOAD CAPACITY - PSF SINGLE DOORS (X) | | | |
|---|---|---|---|
| DOOR DIMS. | | ADA THRESHOLD | |
| FRAME WIDTH | FRAME HEIGHT | EXT.(+) | INT.(-) |
| 39-3/8" | 132-5/8" | 50.0 | 50.0 |

NOTE:
VERIFY COMPLIANCE WITH EGRESS LIMITATIONS WHERE REQUIRED.

| DOORS LOAD CAPACITY - PSF DOUBLE DOORS (XX) | | | |
|---|---|---|---|
| DOOR DIMS. | | ADA THRESHOLD | |
| FRAME WIDTH | FRAME HEIGHT | EXT.(+) | INT.(-) |
| 76" | 132-5/8" | 50.0 | 50.0 |

DOUBLE (XX) DOORS NOT RATED FOR WATER RESISTANCE
SEE SHEET 7 FOR DETAILS

DOOR D.L.O. DIMS.

D.L.O. HEIGHT = FRAME HEIGHT - 15.313"
D.L.O. WIDTH (X DOORS) = FRAME WIDTH - 12.625"
D.L.O. WIDTH (XX DOORS) = (FRAME WIDTH - 22.875)/2

DOORS WITH
ADA THRESHOLD

Approved as complying with the Florida Building Code
Date 8/5/14
NOA# 14-0305.07
Miami Dade Product Control
By Isheng L. Chang

NOTE:
GLASS CAPACITIES ON THIS SHEET ARE BASED ON ASTM E1300-09 (3 SEC. GUSTS) AND FLORIDA BUILDING COMMISSION DECLARATORY STATEMENT DCA05-DEC-219

Engr: JAVAD AHMAD
CIVIL
FLA. PE # 70592
C.A.#. 3538
JUL 31 2014

AL-FAROOQ CORPORATION
ENGINEERS & PRODUCT DEVELOPMENT
1235 S.W. 87 AVE
MIAMI, FLORIDA 33174
TEL. (305) 264-8100 FAX. (305) 262-6978
COMP-ANL\W13-62SIW

SERIES 500-11 ALUM OUTSWING ENTRANCE DOOR (L.M.I.)

SIW IMPACT WINDOWS, LLC.
975 S. CONGRESS AVE. #102
DELRAY BEACH, FL. 33445
TEL. (561) 274-9392 FAX. (561) 274-9262

revisions:

| no | date | by | description |
|---|---|---|---|
| A | 07.10.14 | | NO CHANGE THIS SHEET |
| B | 07.31.14 | | REV. PER RER COMMENTS |

date: 12-31-13
scale: 1/2"=1'-0"
dr. by: TARIQ
chk. by:

drawing no.
W13-69

## SINGLE (STATIONARY) SIDELITE UNIT

(SEE DETAIL IN SHEET 9)

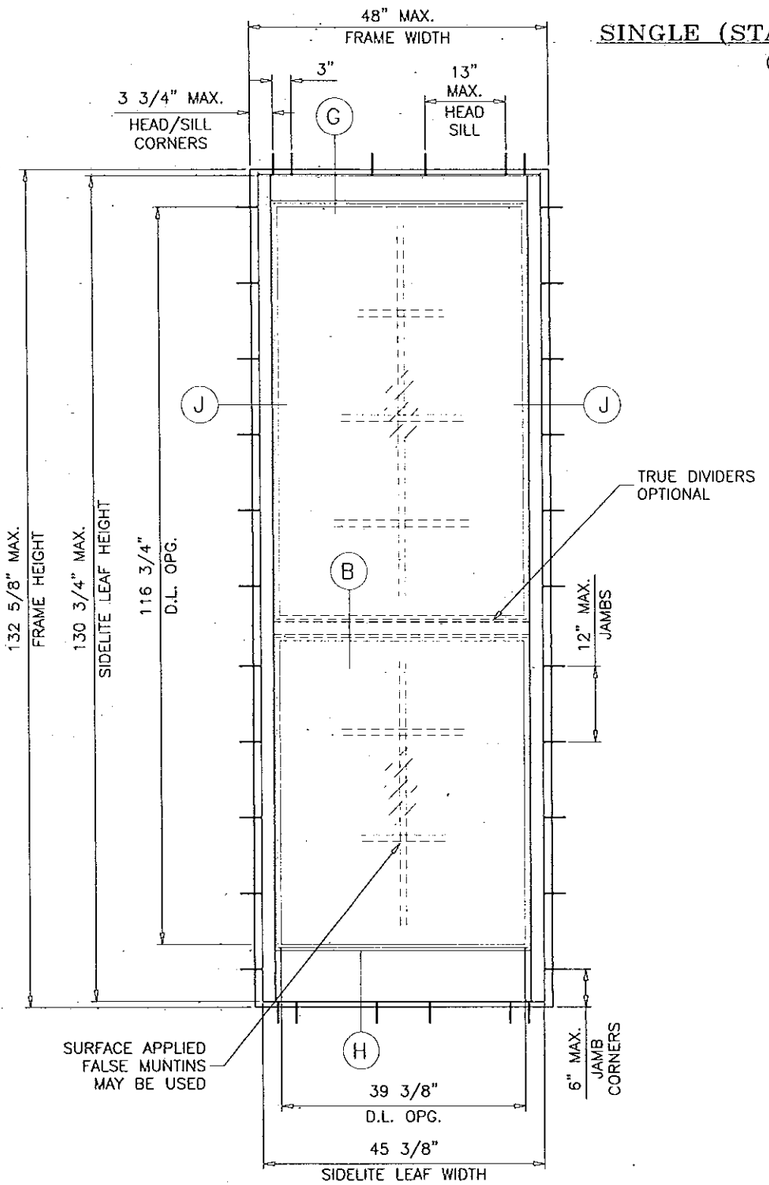


TYPICAL ELEVATION

( O )

| SIDELITE LOAD CAPACITY – PSF<br>STATIONARY PANEL (O) | | | |
|---|---|---|---|
| DOOR DIMS. | | STD. THRESHOLD | |
| FRAME WIDTH | FRAME HEIGHT | EXT.(+) | INT.(–) |
| 48" | 132–5/8" | 50.0 | 50.0 |

SIDELITE D.L.O. DIMS.

D.L.O. HEIGHT = FRAME HEIGHT – 13.875"

D.L.O. WIDTH = FRAME WIDTH – 8.625 (NARROW STILE SIDELITE)

D.L.O. WIDTH = FRAME WIDTH – 12.625 (WIDE STILE SIDELITE OPTIONAL)

Approved as complying with the
Florida Building Code
Date 8/8/14
NOA# 14-0305.07
Miami Dade Product Control
By

Engr: JAVAD AHMAD
CIVIL
FLA. PE # 70592
C.A.R. 3538
JUL 31 2014


AL-FAROOQ CORPORATION
ENGINEERS & PRODUCT DEVELOPMENT
1235 S.W. 87 AVE
MIAMI, FLORIDA 33174
TEL. (305) 264-8100 FAX. (305) 262-6978


COMP-ANL\W13-62SIW

SERIES 500-11 ALUM OUTSWING ENTRANCE DOOR (L.M.I.)

SIW IMPACT WINDOWS, LLC.
975 S. CONGRESS AVE. #102
DELRAY BEACH, FL. 33445
TEL. (561) 274-9392 FAX. (561) 274-9262

| revisions: | | | |
|---|---|---|---|
| no | date | by | description |
| A | 07.10.14 | | REV. PER RER COMMENTS |
| B | 07.31.14 | | REV. PER RER COMMENTS |

date: 12-31-13
scale: 1/2"=1'-0"
dr. by: TARIQ
chk. by:

drawing no.
W13-69

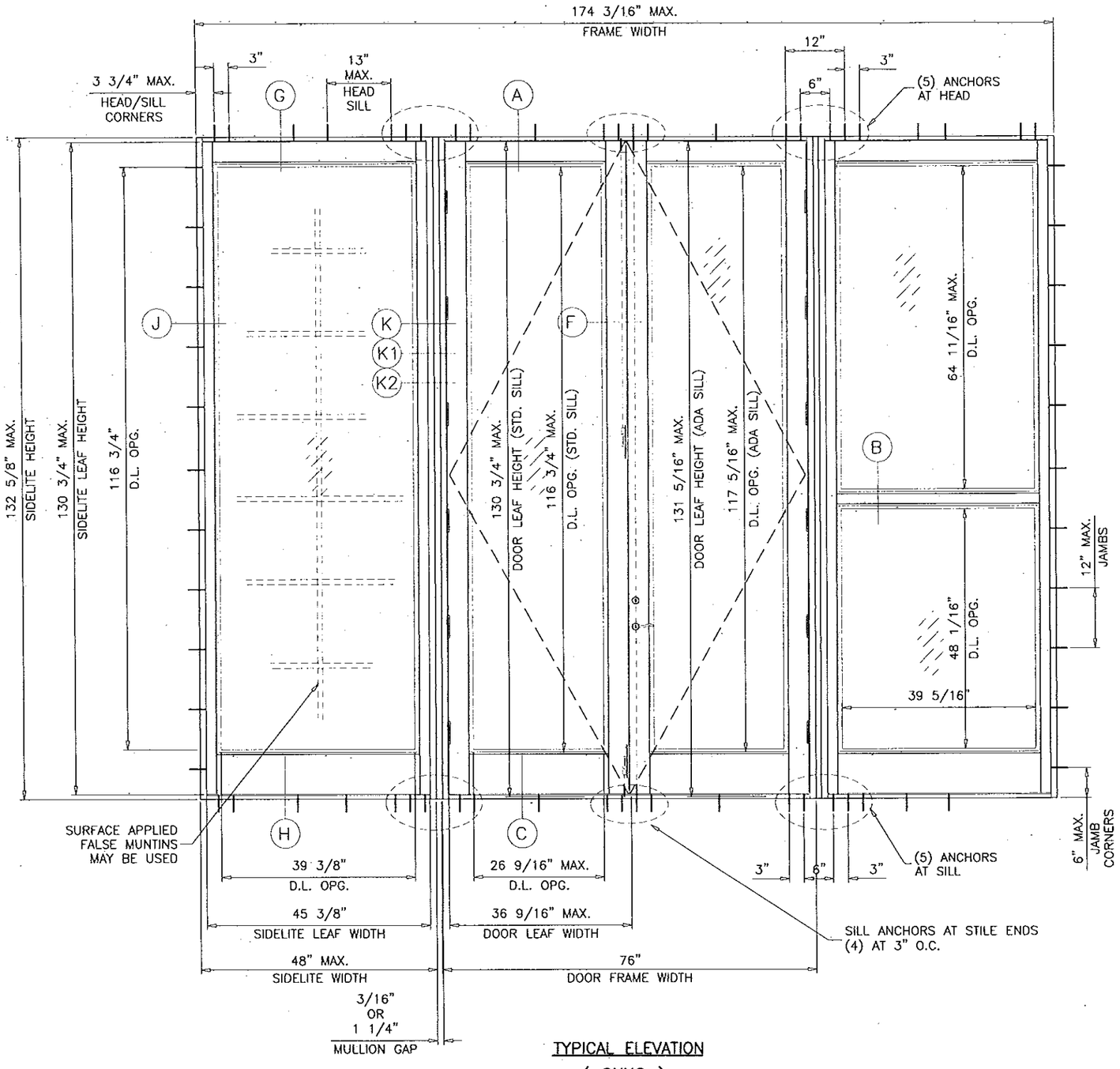


TYPICAL ELEVATION

( OXXO )

| DOOR WITH SIDELITE LOAD CAPACITY – PSF | | | | | | | |
|---|---|---|---|---|---|---|---|
| DIMS. | | | | STD. THRESHOLD | | ADA THRESHOLD | |
| DOOR FRAME WIDTH (X) | DOOR FRAME WIDTH (XX) | SIDELITE WIDTH | FRAME HEIGHT | EXT.(+) | INT.(–) | EXT.(+) | INT.(–) |
| 39–3/8" | 76" | 48" | 132–5/8" | 50.0 | 50.0 | 50.0 | 50.0 |

DOUBLE (XX) DOORS NOT RATED FOR WATER RESISTANCE
SEE SHEET 7 FOR DETAILS

Approved as complying with the Florida Building Code
Date 8/5/14
NOA# 14-0305.07
Miami-Dade Product Control
By Ishaq Chaudhary

D.L.O. DIMS.

SEE SHEETS 2 & 3 FOR DOOR DLO SIZES.
SEE SHEET 4 FOR SIDELITE DLO SIZES.

Engr: JAVAD AHMAD
CIVIL
FLA. PE # 70592
C.A.N. 3538
JUL 31 2014

AL-FAROOQ CORPORATION
ENGINEERS & PRODUCT DEVELOPMENT
1235 S.W. 87 AVE
MIAMI, FLORIDA 33174
TEL (305) 264-8100 FAX. (305) 262-6978

COMP-ANL\W13-62SIW

SERIES 500-11 ALUM OUTSWING ENTRANCE DOOR (L.M.I.)

SIW IMPACT WINDOWS, LLC.
975 S. CONGRESS AVE. #102
DELRAY BEACH, FL. 33445
TEL. (561) 274-9392 FAX. (561) 274-9262

revisions:

| no | date | by | description |
|---|---|---|---|
| A | 07.10.14 | | REV. PER RER COMMENTS |
| B | 07.31.14 | | REV. PER RER COMMENTS |

date: 12-31-13
scale: 1/2"=1'-0"
dr. by: TARIQ
chk. by:

drawing no.
W13-69

sheet 5 of 14

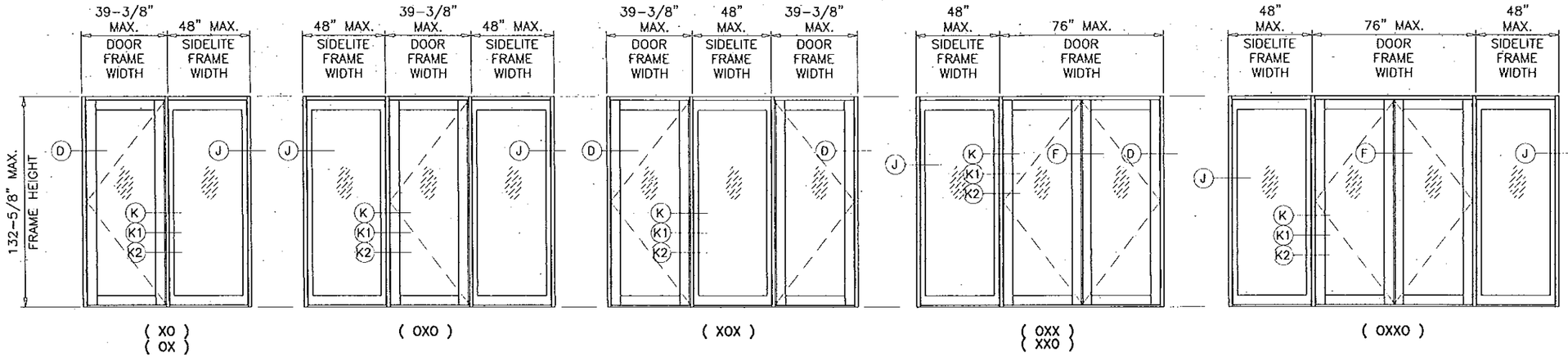


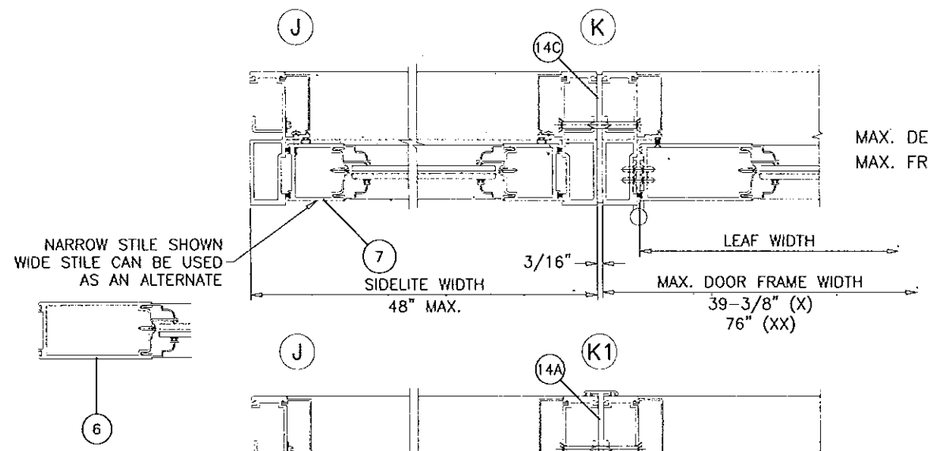


MAX. DESIGN LOAD = 50 PSF
MAX. FRAME HEIGHT = 132-5/8"

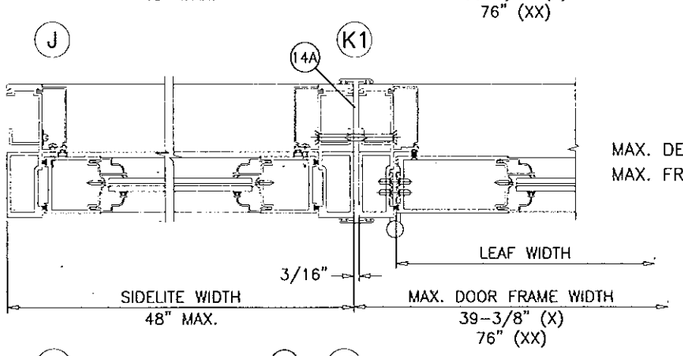


MAX. DESIGN LOAD = 50 PSF
MAX. FRAME HEIGHT = 132-5/8"

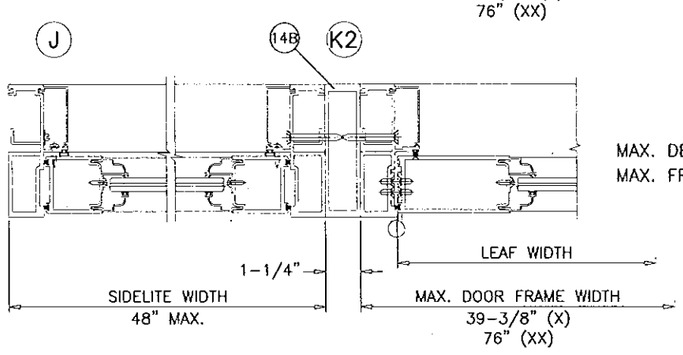


MAX. DESIGN LOAD = 50 PSF
MAX. FRAME HEIGHT = 132-5/8"

SIDELITE TO DOOR APPROVED CONFIGURATIONS

Approved as complying with the
Florida Building Code
Date 8/5/14
NOA# 14-0305.07
Miami-Dade Product Control
By

Engr: JAVAD AHMAD
CIVIL
FLA. PE # 70592
C.A.N. 3518
JUL 31 2014


AL-FAROOQ CORPORATION
ENGINEERS & PRODUCT DEVELOPMENT
1235 S.W. 87 AVE
MIAMI, FLORIDA 33174
TEL (305) 264-8100 FAX. (305) 262-6978


COMP-ANL\W13-62SIW

SERIES 500-11 ALUM OUTSWING ENTRANCE DOOR (L.M.I.)

SIW IMPACT WINDOWS, LLC.
975 S. CONGRESS AVE. #102
DELRAY BEACH, FL. 33445
TEL. (561) 274-9392 FAX. (561) 274-9262

revisions:

| no | date | by | description |
|---|---|---|---|
| A | 07.10.14 | RER | REV. PER COMMENTS |
| B | 07.31.14 | RER | REV. PER COMMENTS |

date: 12-31-13
scale: 3/8" = 1"
dr. by: TARIQ
chk. by:

drawing no.
W13-69

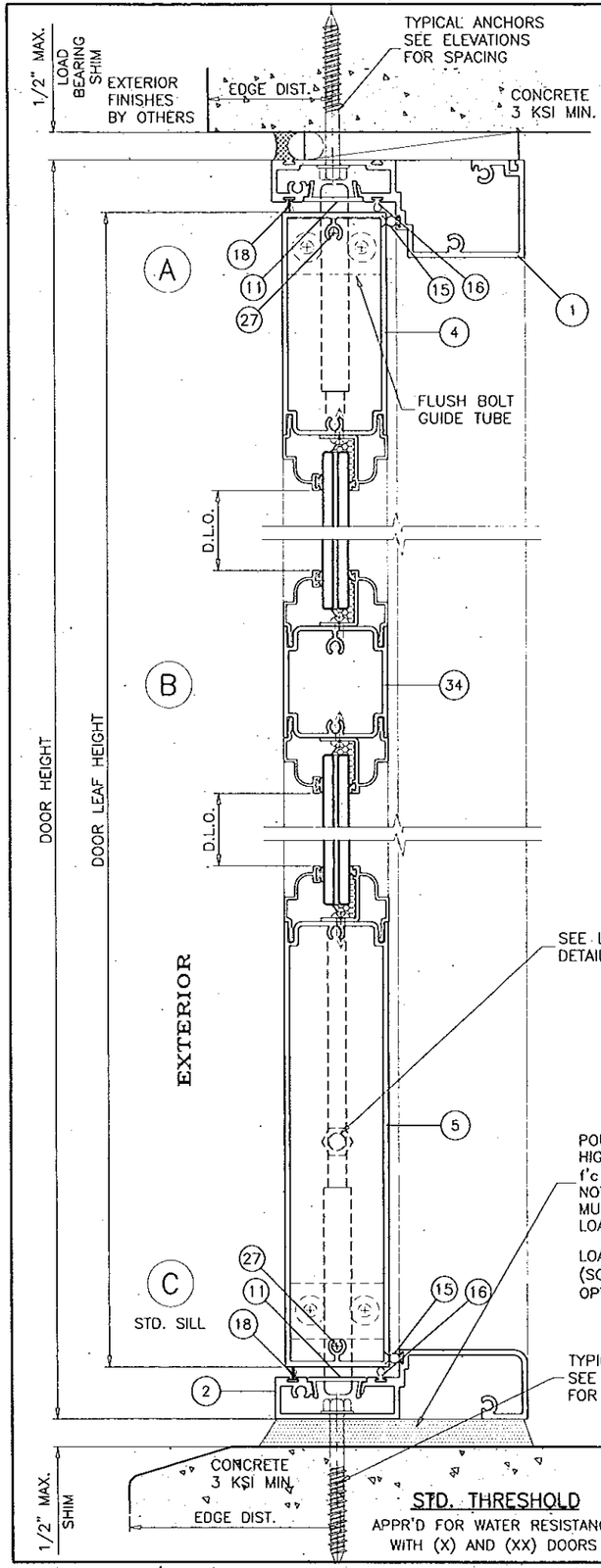


STD. THRESHOLD

APPR'D FOR WATER RESISTANCE WITH (X) AND (XX) DOORS

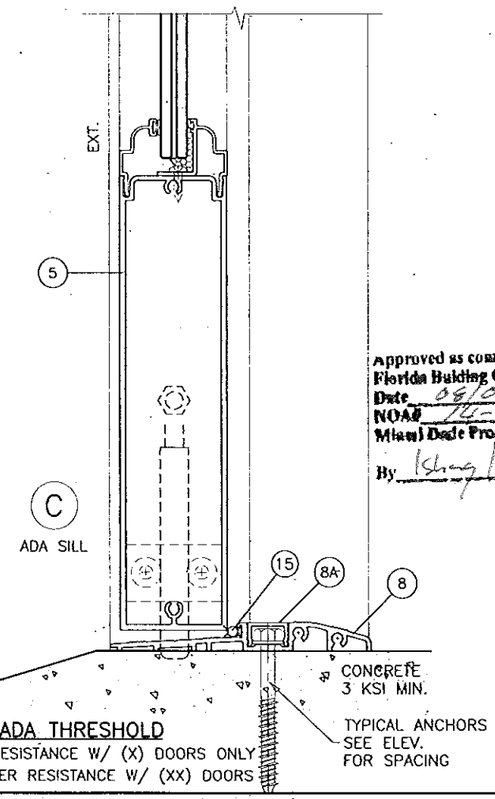


ADA THRESHOLD

APPR'D FOR WATER RESISTANCE W/ (X) DOORS ONLY
NOT APPR'D FOR WATER RESISTANCE W/ (XX) DOORS

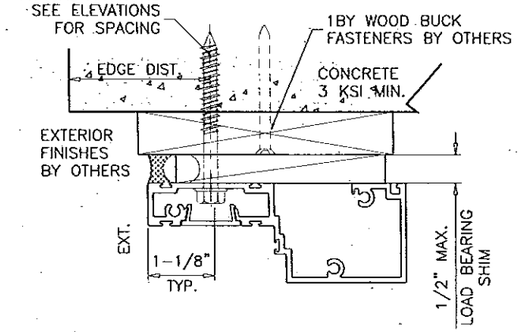


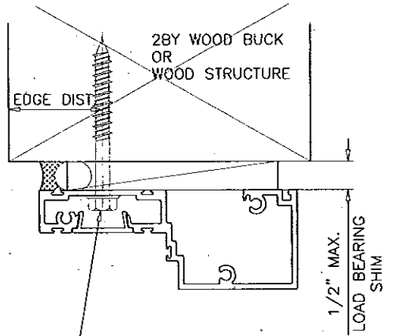


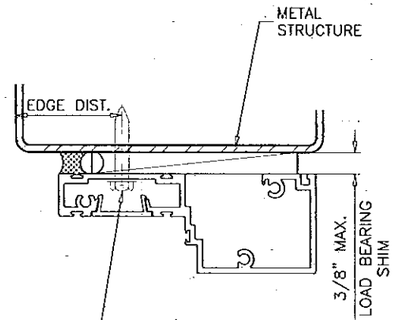


WOOD BUCKS AND METAL STRUCTURE NOT BY SIW WINDOWS MUST SUSTAIN LOADS IMPOSED BY GLAZING SYSTEM AND TRANSFER THEM TO THE BUILDING STRUCTURE.

Approved as complying with the Florida Building Code
Date 08/08/14
NOA# 14-0305.01
Miami-Dade Product Control
By Ishaq I. Chanda

## TYPICAL ANCHORS: SEE ELEV. FOR SPACING

TYPE 'A'– 1/4" DIA. ULTRACON BY 'ELCO' (Fu=177 KSI, Fy=155 KSI)
MIN. LENGTH = 2-3/4"
INTO 2BY WOOD BUCKS OR WOOD STRUCTURES
1-1/2" MIN. PENETRATION INTO WOOD (HEAD/JAMBS)
THRU 1BY BUCKS INTO CONC. OR MASONRY
1-3/4" MIN. EMBED INTO CONCRETE (HEAD/SILL)
1-1/4" MIN. EMBED INTO CONC. OR MASONRY (JAMBS)

TYPE 'B'– 1/4" DIA. ULTRACON BY 'ELCO' (Fu=177 KSI, Fy=155 KSI)
MIN. LENGTH = 2-3/4"
DIRECTLY INTO CONC. OR MASONRY
1-3/4" MIN. EMBED INTO CONCRETE (HEAD/SILL)
1-1/4" MIN. EMBED INTO CONC. OR MASONRY (JAMBS)

TYPE 'C'– 1/4" DIA. SELF DRILLING SCREWS (Fu=120 KSI, Fy=90 KSI)
INTO MIAMI-DADE COUNTY APPROVED MULLIONS (MIN. THK. = 1/8")
INTO METAL STRUCTURES (HEAD/SILL/JAMBS)
STEEL : 12 GA. MIN. (Fy = 36 KSI MIN.)
ALUMINUM : 1/8" THK. MIN. (6063-T5 MIN.)
(STEEL IN CONTACT WITH ALUMINUM TO BE PLATED OR PAINTED)

TYPICAL EDGE DISTANCE
INTO CONCRETE AND MASONRY = 2-1/2" MIN.
INTO WOOD STRUCTURE = 1" MIN.
INTO METAL STRUCTURE = 3/4" MIN.

CONCRETE AT HEAD, SILL OR JAMBS f'c = 3000 PSI MIN.
C-90 HOLLOW/FILLED BLOCK AT JAMBS f'm = 2000 PSI MIN.

ANCHORS MAY BE HEX OR FLAT HEAD.

DOOR DETAILS

Engr: JAVAD AHMAD
CIVIL
FLA. PE # 70592
C.A.N. 3588
JUL 31 2014


AL-FAROOQ CORPORATION
ENGINEERS & PRODUCT DEVELOPMENT
1235 S.W. 87 AVE
MIAMI, FLORIDA 33174
TEL. (305) 264-8100 FAX. (305) 262-6978


COMP-ANL\W13-62SIW

SERIES 500-11 ALUM OUTSWING ENTRANCE DOOR (L.M.I.)

SIW IMPACT WINDOWS, LLC.
975 S. CONGRESS AVE. #102
DELRAY BEACH, FL. 33445
TEL. (561) 274-9392 FAX. (561) 274-9262

| revisions: | | | |
|---|---|---|---|
| no. | date | by | description |
| A | 07.10.14 | | REV. PER RER COMMENTS |
| B | 07.31.14 | | REV. PER RER COMMENTS |

date: 12-31-13
scale: 3/8" = 1"
dr. by: TARIQ
chk. by:

drawing no. W13-69

sheet 7 of 14

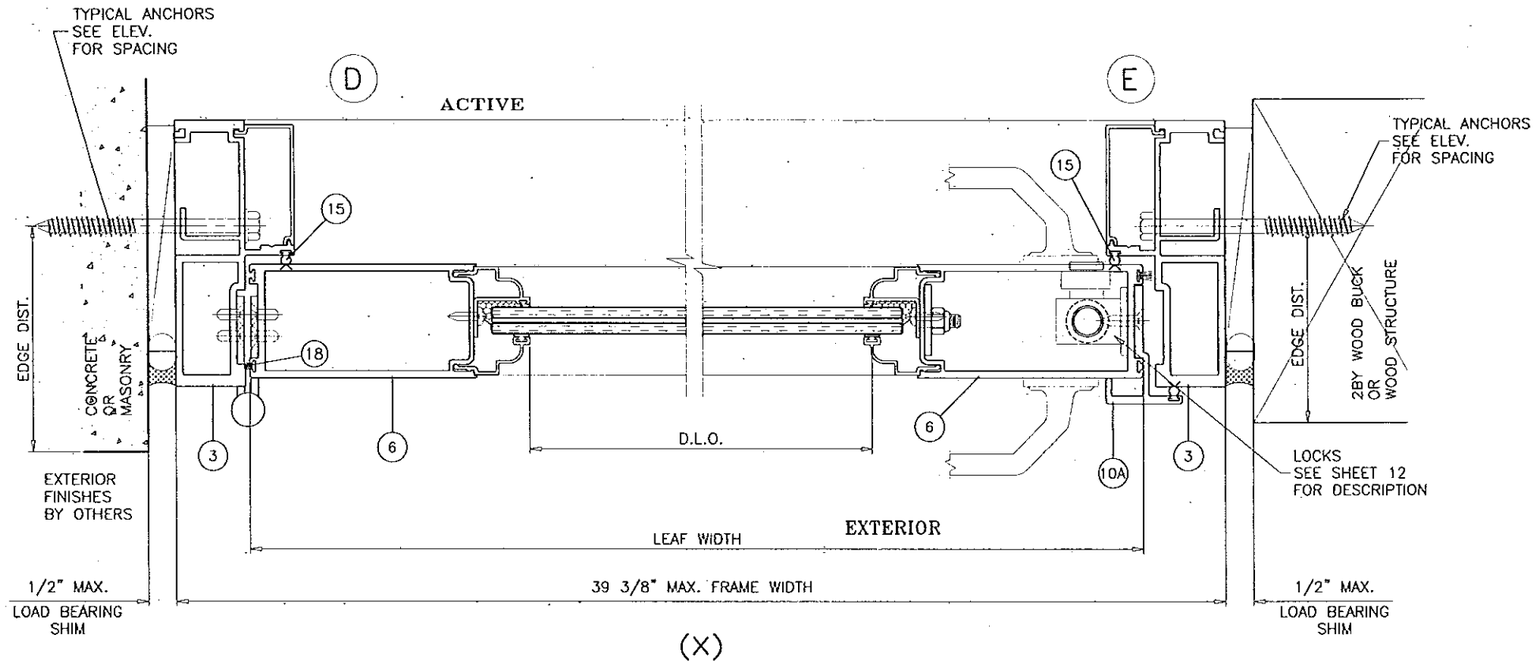


(X)

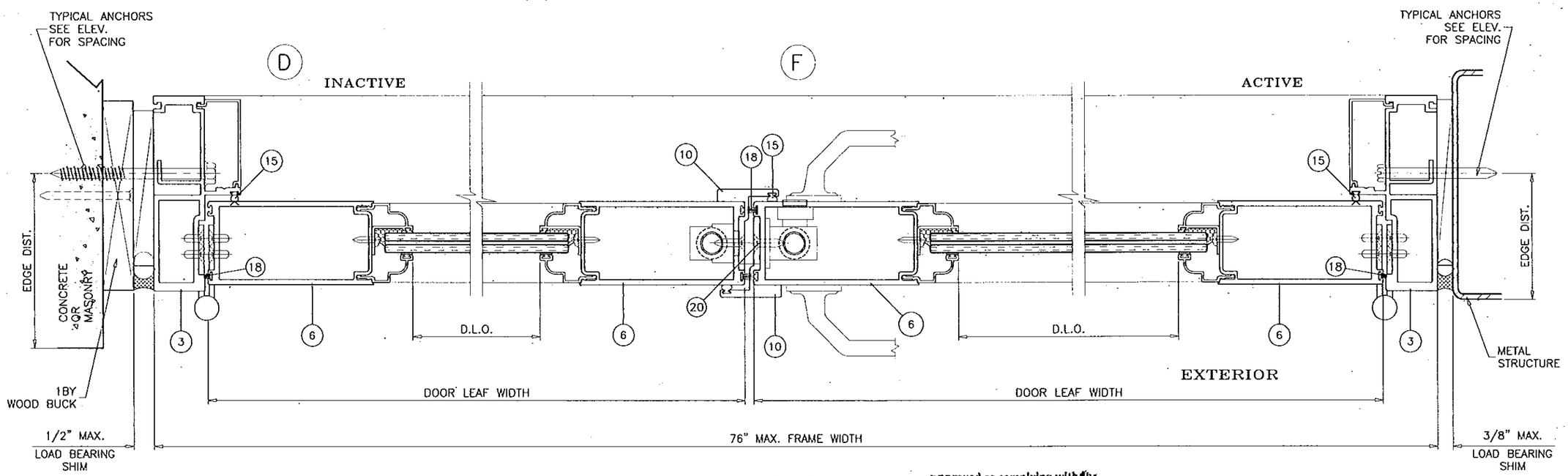


(XX)

Approved as complying with the Florida Building Code
Date 09/08/14
NOA# 14-0305.07
Miami-Dade Product Control
By

Engr: JAVAD AHMAD
CIVIL
FLA. PE # 70592
C.A.N. 3538
JUL 31 2014

DOOR DETAILS


AL-FAROOQ CORPORATION
ENGINEERS & PRODUCT DEVELOPMENT
1235 S.W. 87 AVE
MIAMI, FLORIDA 33174
TEL. (305) 264-8100 FAX. (305) 262-6978
COMP-ANL\W13-62SIW


SERIES 500-11 ALUM OUTSWING ENTRANCE DOOR (L.M.I.)

SIW IMPACT WINDOWS, LLC.
975 S. CONGRESS AVE. #102
DELRAY BEACH, FL. 33445
TEL. (561) 274-9392 FAX. (561) 274-9262

revisions:

| no | date | by | description |
|---|---|---|---|
| A | 07.10.14 | RER | REV. PER COMMENTS |
| B | 07.31.14 | RER | REV. PER COMMENTS |

date: 12-31-13
scale: 3/8" = 1"
dr. by: TARIQ
chk. by:

drawing no.
W13-69

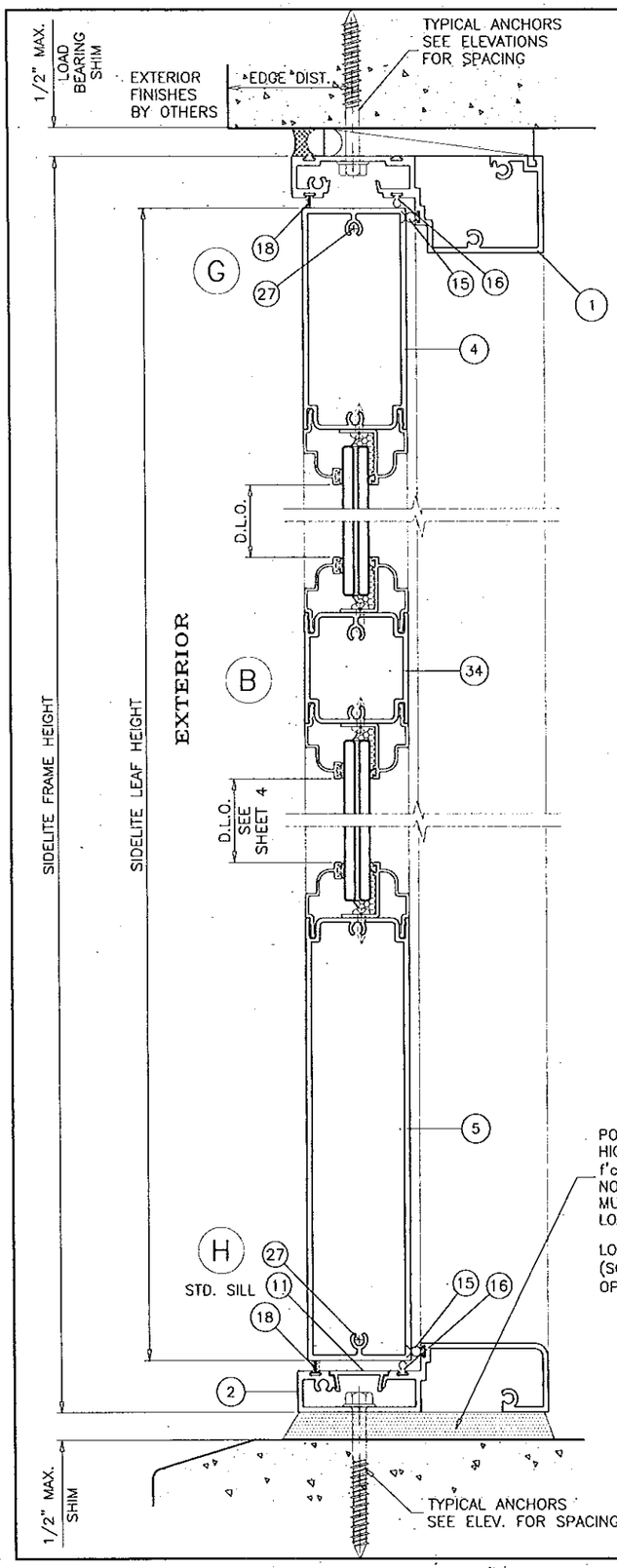


STATIONARY UNITS
(SINGLE SIDELITE)

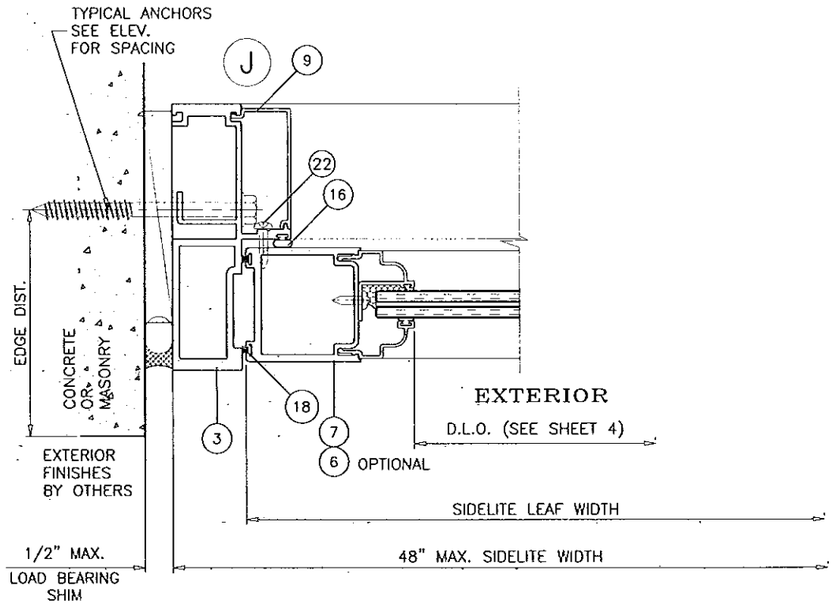


Approved as complying with the Florida Building Code
Date 06/08/14
NOA# 14-0305.07
Miami Dade Product Control
By

Engr: JAVAD AHMAD
CIVIL
FLA. PE # 70592
C.A.N. 3538

JUL 31 2014

SIDELITE DETAILS


AL-FAROOQ CORPORATION
ENGINEERS & PRODUCT DEVELOPMENT
1235 S.W. 87 AVE
MIAMI, FLORIDA 33174
TEL (305) 264-8100 FAX (305) 262-6978


COMP-ANL\W13-62SIW

SERIES 500-11 ALUM OUTSWING ENTRANCE DOOR (L.M.I.)

SIW IMPACT WINDOWS, LLC.
975 S. CONGRESS AVE. #102
DELRAY BEACH, FL. 33445
TEL. (561) 274-9392 FAX. (561) 274-9262

revisions:

| no | date | by | description |
|---|---|---|---|
| A | 07.10.14 | | REV. PER RER COMMENTS |
| B | 07.31.14 | | REV. PER RER COMMENTS |

date: 12-31-13
scale: 3/8" = 1"
dr. by: TARIQ
chk. by:

drawing no.
W13-69

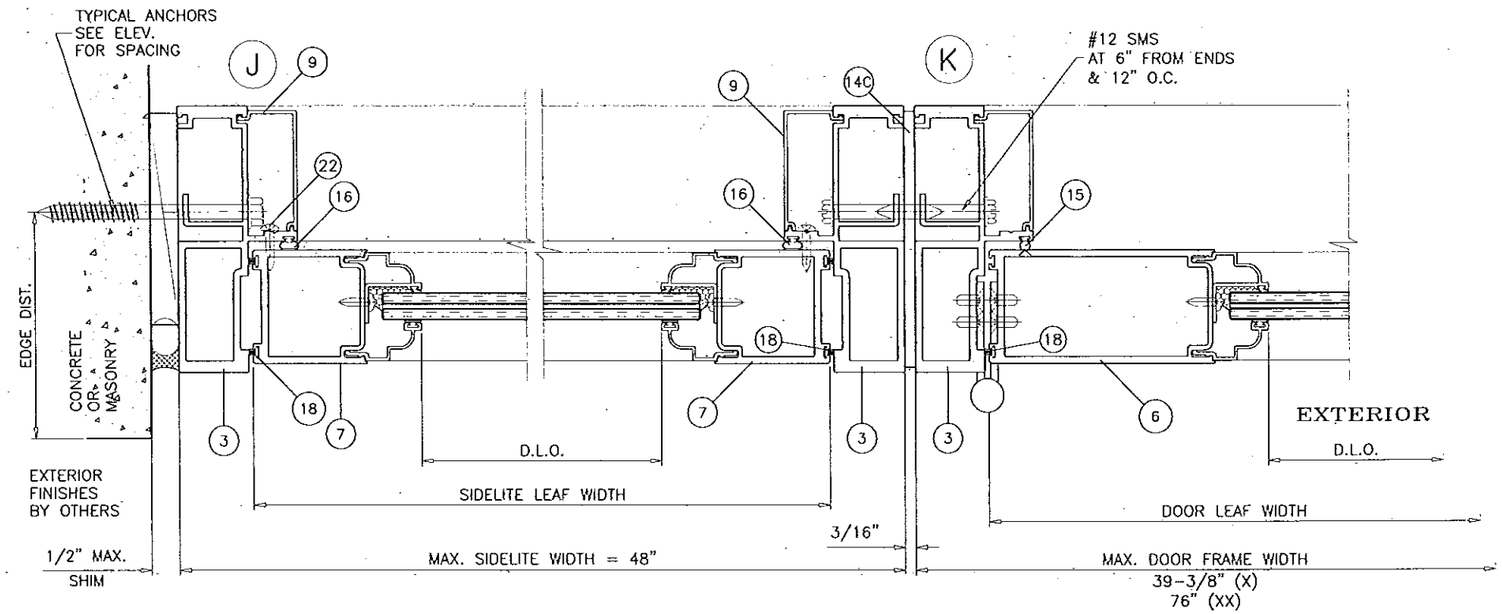


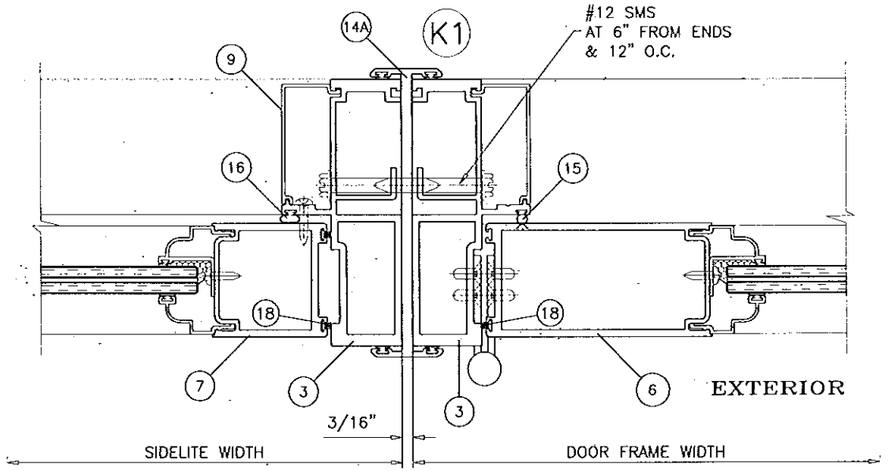


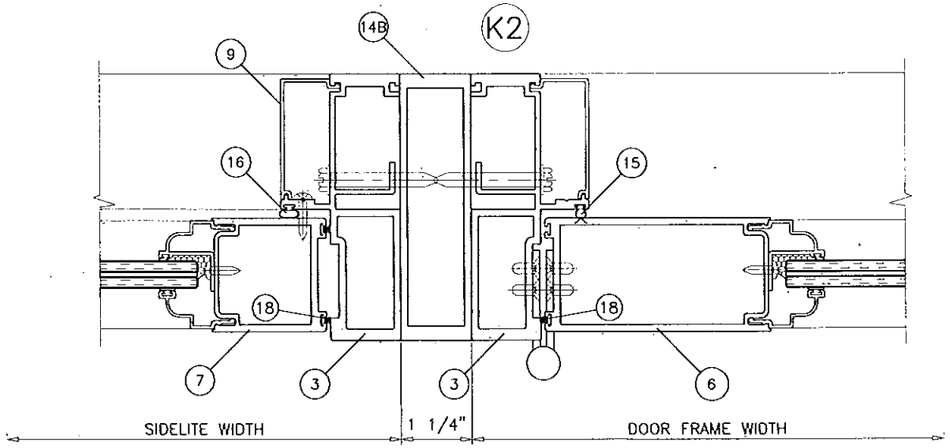


Approved as complying with the
Florida Building Code
Date 08/08/14
NOA# 14-0326.07
Miami-Dade Product Control
By

MULLION DETAILS

Engr: JAVAD AHMAD
CIVIL
FLA. PE # 70592
C.A.N. 3518
JUL 28 2014


AL-FAROOQ CORPORATION
ENGINEERS & PRODUCT DEVELOPMENT
1235 S.W. 87 AVE
MIAMI, FLORIDA 33174
TEL. (305) 264-8100 FAX. (305) 262-6978


COMP-ANL\W13-62SIW

SERIES 500-11 ALUM OUTSWING ENTRANCE DOOR (L.M.I.)

SIW IMPACT WINDOWS, LLC.
975 S. CONGRESS AVE. #102
DELRAY BEACH, FL. 33445
TEL. (561) 274-9392 FAX. (561) 274-9262

revisions:

| no | date | by | description |
|---|---|---|---|
| A | 07.10.14 | | REV. PER RER COMMENTS |
| B | 07.31.14 | | REV. PER RER COMMENTS |

date: 12-31-13
scale: 3/8" = 1"
dr. by: TARIQ
chk. by:

drawing no.
W13-69

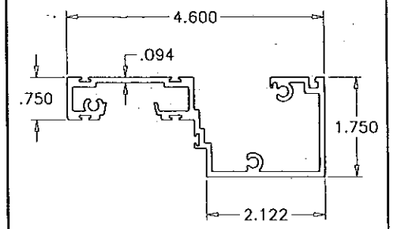


(1) DOOR/SIDELITE FRAME HEAD

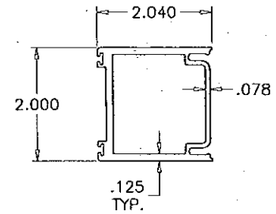


(7) SIDELITE SASH STILE

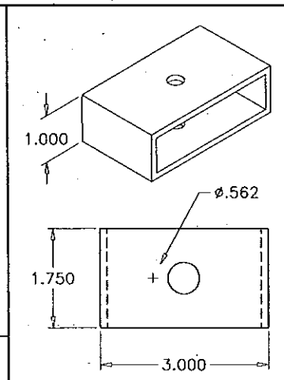


(31) FLUSH BOLT BLOCK

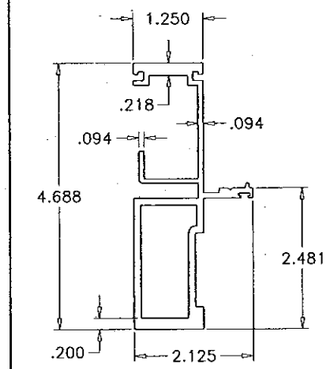


(3) FRAME JAMB

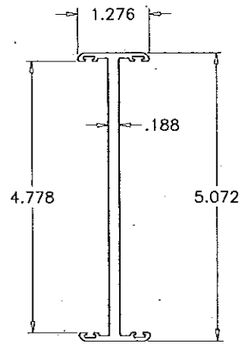


(14A) H MULLION

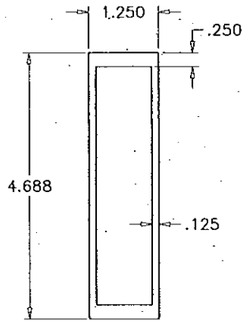


(14B) MULLION

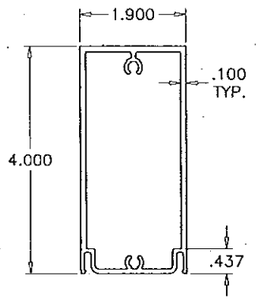


(4) TOP RAIL

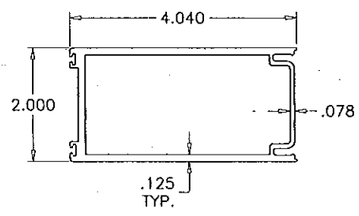


(6) HINGE/LOCK STILE

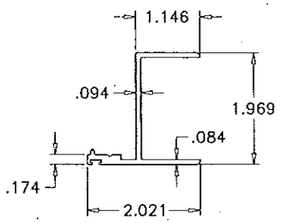


(14) JAMB/MULL ADAPTER

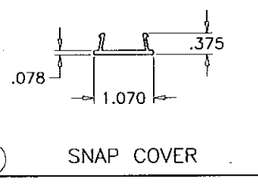


(11) SNAP COVER

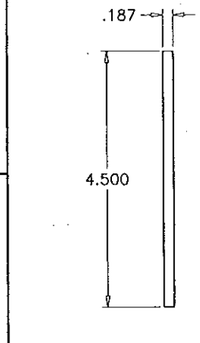


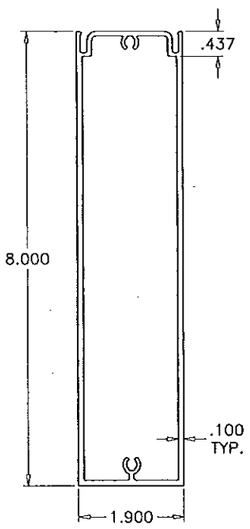


(5) BOTTOM RAIL

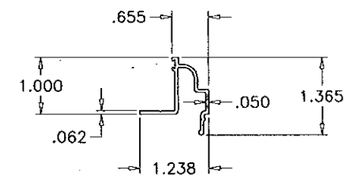


(12) INT. GLASS STOP (LAM. GLASS)

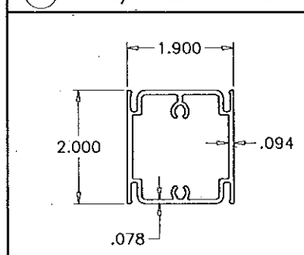


(34) CHAIR RAIL




(9) JAMB SCREW COVER

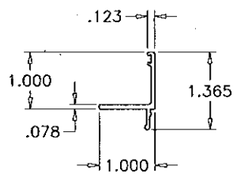


(12A) INT. GLASS STOP (INSUL. LAM. GLASS)

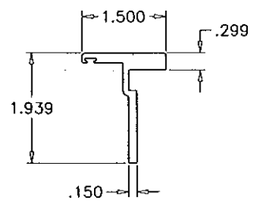


(10) DOUBLE DOOR ASTRAGAL

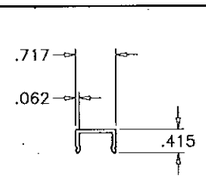


(8A) THRESHOLD COVER

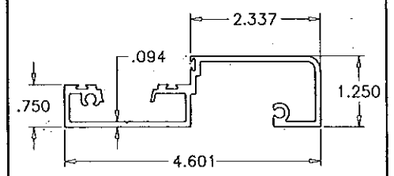


(2) STANDARD THRESHOLD

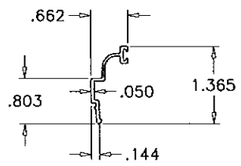


(13) EXTERIOR GLASS STOP

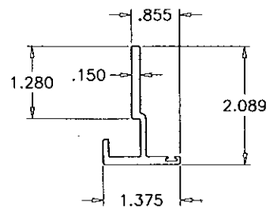


(10A) SINGLE DOOR ASTRAGAL

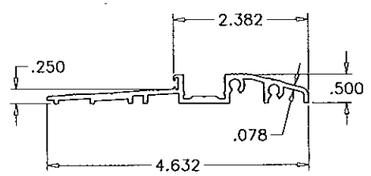


(8) ADA THRESHOLD

(14C) MULLION BAR

Approved as complying with the Florida Building Code
Date 08/05/14
NOA# 14-0305.07
Miami Dade Product Control
By Ishaq L. Ghaat

Engr: JAVAD AHMAD
CIVIL
FLA. PE # 70592
C.A.N. 3538
JUL 31 2014

AL-FAROOQ CORPORATION
ENGINEERS & PRODUCT DEVELOPMENT
1235 S.W. 87 AVE
MIAMI, FLORIDA 33174
TEL (305) 264-8100 FAX. (305) 262-6978

COMP-ANL\W13-62SIW

SERIES 500-11 ALUM OUTSWING ENTRANCE DOOR (L.M.I.)

SIW IMPACT WINDOWS, LLC.
975 S. CONGRESS AVE. #102
DELRAY BEACH, FL. 33445
TEL. (561) 274-9392 FAX. (561) 274-9262

revisions:

| no | date | by | description |
|---|---|---|---|
| A | 07.10.14 | | REV. PER RER COMMENTS |
| B | 07.31.14 | | REV. PER RER COMMENTS |

date: 12-31-13
scale: 3/8" = 1"
dr. by: TARIQ
chk. by:

drawing no.
W13-69

sheet 11 of 14

| ITEM # | PART # | REQD. | DESCRIPTION | MATERIAL | MANF./SUPPLIER/REMARKS |
|---|---|---|---|---|---|
| 1 | SIW505 | 1 | DOOR/SIDELITE FRAME HEAD | 6063-T6 | – |
| 2 | SIW515 | 1 | STANDARD THRESHOLD | 6063-T6 | – |
| 3 | SIW506 | 2/DOOR | FRAME JAMB | 6063-T6 | – |
| 4 | SIW502 | 1/ LEAF | DOOR TOP RAIL | 6063-T6 | – |
| 5 | SIW536 | 1/ LEAF | DOOR BOTTOM RAIL | 6063-T6 | – |
| 6 | SIW503 | 2/ LEAF | HINGE STILE/LOCK STILE | 6063-T6 | – |
| 7 | SIW507 | 2/ LEAF | SIDELITE SASH STILE | 6063-T6 | – |
| 8 | SIW546 | 1 | ADA THRESHOLD | 6063-T6 | – |
| 8A | SIW547 | 1 | THRESHOLD COVER | 6063-T6 | – |
| 9 | SIW511 | AS REQD. | JAMB SCREW COVER | 6063-T6 | – |
| 10 | SIW509 | AS REQD. | DOUBLE DOOR ASTRAGAL | 6063-T6 | – |
| 10A | SIW535 | AS REQD. | SINGLE DOOR ASTRAGAL | 6063-T6 | – |
| 11 | SIW510 | AS REQD. | SCREW COVER | 6063-T5 | – |
| 12 | SIW512 | AS REQD. | INTERIOR GLASS STOP (LAM. GLASS) | 6063-T5 | – |
| 12A | SIW520 | AS REQD. | INTERIOR GLASS STOP (INSUL. LAM. GLASS) | 6063-T5 | – |
| 13 | SIW513 | AS REQD. | EXTERIOR GLASS STOP | 6063-T6 | – |
| 14 | SIW504 | AS REQD. | DOOR JAMB/MULL ADAPTER | 6063-T6 | – |
| 14A | SIW543 | AS REQD. | H MULLION | 6063-T6 | – |
| 14B | SIW914 | AS REQD. | MULLION TUBE | 6063-T6 | – |
| 14C | – | AS REQD. | MULLION BAR | 6063-T6 | – |
| 15 | 9016E | – | BULB W'STRIPPING | VINYL | CENTRAL PLSTICS |
| 16 | U4513 | – | Q-LON W'STRIPPING | VINYL | SCHLEGEL |
| 17 | 5530 | AS REQD. | INTERIOR GLAZING GASKET (DUROMETER 70±5) | SANTOPRENE | BY CENTRAL PLASTICS |
| 17A | 5531 | AS REQD. | EXTERIOR GLAZING GASKET (DUROMETER 70±5) | SANTOPRENE | BY CENTRAL PLASTICS |
| 18 | W23201NW0020 | AS RQD. | FINSEAL PILE W'STRIPPING | – | ULTRAFAB |
| 20 | #8 X 1/2" | – | ASTRAGAL SCREWS PH SMS | – | AT 4" FROM ENDS & 8" O.C. |
| 21 | #8 X 1/2" | AS REQD. | GLASS STOP SCREWS SELF DRILLING | – | AT 8" FROM ENDS & 15" O.C. MAX. |
| 22 | #12 X 1-1/4" | – | FIX. PANEL SCREWS PH SMS | – | AT 6" FROM ENDS & 17" O.C. MAX. |
| 24 | SD44HD | 4/LEAF | BUTT HINGES | – | STAINLESS STEEL |
| 27 | #12 X 2" | 1/ CORNER | FRAME AND LEAF ASSEMBLY SCREWS | ST. STEEL | PH SMS |
| 28 | #12 X 1/2" | AS REQD. | HINGE ASSEMBLY SCREWS | ST. STEEL | FH MS TYPE F SS |
| 31 | SIW 521 | – | FLUSH BOLT BLOCK | 6063-T6 | – |
| 32 | #2 | – | FLUSH BOLTS | – | SULLIVAN & ASSOC. |
| 33 | W5110-STATC6 | – | SENTINEL MULTIPOINT LOCK | – | ASHLAND HARDWARE |
| 34 | SIW539 | – | 2" CHAIR RAIL | 6063-T6 | – |
| 35 | – | 2/ LITE | SETTING BLOCK | EPDM | DUROMETER 85±5 SHORE A |

## LOCK OPTIONS:

### STD. LOCKS:

**ACTIVE LEAF:**

OPTION #1:

SENTINEL MULTIPOINT LOCK BY 'ASHLAND'
WITH THROW BOLT AT 35-1/2" FROM BOTTOM
FLUSH BOLTS CONNECTED TO LOCK
KEY OPERATED ON EXTERIOR AND THUMB TURN ON
INTERIOR AND ENGAGING FRAME AT HEAD AND SILL

OPTION #2:

3 POINT LOCK ASSEMBLY (M1805S) BY 'ADAMS RITE'
WITH 4015 THROW BOLT AT 36" FROM BOTTOM
FLUSH BOLTS CONNECTED TO LOCK
KEY OPERATED ON EXTERIOR AND THUMB TURN ON
INTERIOR AND ENGAGING FRAME AT HEAD AND SILL

**INACTIVE LEAF**

CONCEALED FLUSH BOLTS (FB-1202-914)
BY 'SULLIVAN & ASSOC.'
MANUALLY OPERATED LEVERS MOUNTED ON
EDGE OF LEAF STILE LOCATED AT
13-1/2" FROM BOTTOM AND 34" FROM TOP

## HINGES:

4" X 4" ST. STEEL BUTT HINGES (DSB4NB OR S44HD)
AT 13" FROM TOP AND BOTTOM ENDS AND 21-1/2" O.C. MAX.
HINGE ATTACHED TO DOOR FRAME AND DOOR STILE
USING (4) #12 X 1/2" FH MS
6 HINGES PER LEAF

Approved as complying with the
Florida Building Code
Date 08/08/14
NOA# 14-0305.07
Miami-Dade Product Control
By Ishaq I. Chanda

## SEALANTS:

ALL JOINTS AND FRAME CONNECTIONS SEALED WITH
SMALL JOINT SEALER.

Engr: JAVAD AHMAD
CIVIL
FLA. PE # 70592
C.A.N. 3538
JUL 31 2014


AL-FAROOQ CORPORATION
ENGINEERS & PRODUCT DEVELOPMENT
1235 S.W. 87 AVE
MIAMI, FLORIDA 33174
TEL. (305) 264-8100 FAX. (305) 262-6978


COMP-ANL\W13-62SIW

SERIES 500-11 ALUM OUTSWING ENTRANCE DOOR (L.M.I.)

SIW IMPACT WINDOWS, LLC.
975 S. CONGRESS AVE. #102
DELRAY BEACH, FL. 33445
TEL. (561) 274-9392 FAX. (561) 274-9262

| revisions: | | |
|---|---|---|
| no | date | by | description |
| A | 07.10.14 | | REV. PER RER COMMENTS |
| B | 07.31.14 | | REV. PER RER COMMENTS |

date: 12-31-13
scale: 3/8" = 1"
dr. by: TARIQ
chk. by:

drawing no.
W13-69

sheet 12 of 14

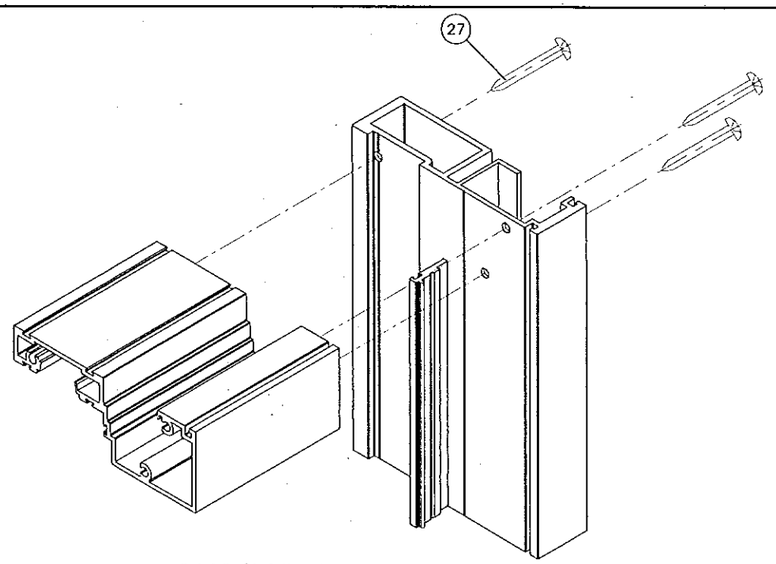


DOOR/SIDELITE FRAME
TOP CORNER

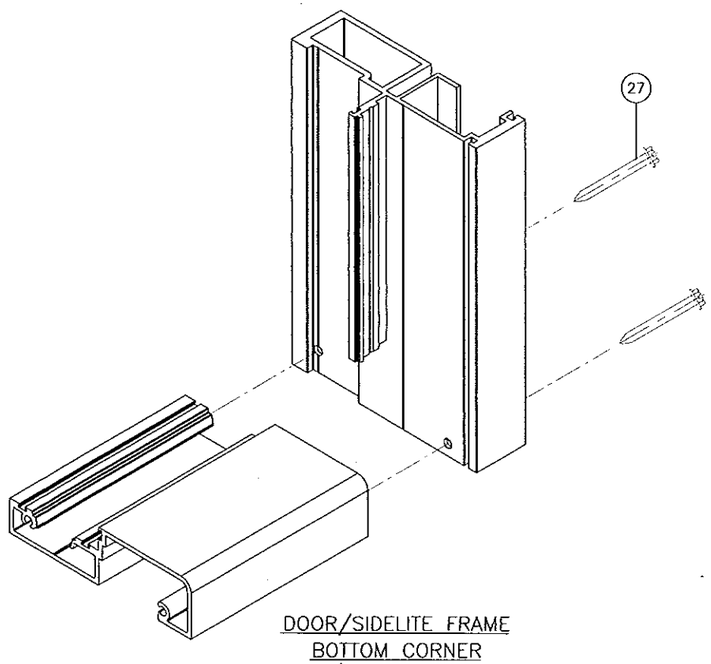


DOOR/SIDELITE FRAME
BOTTOM CORNER

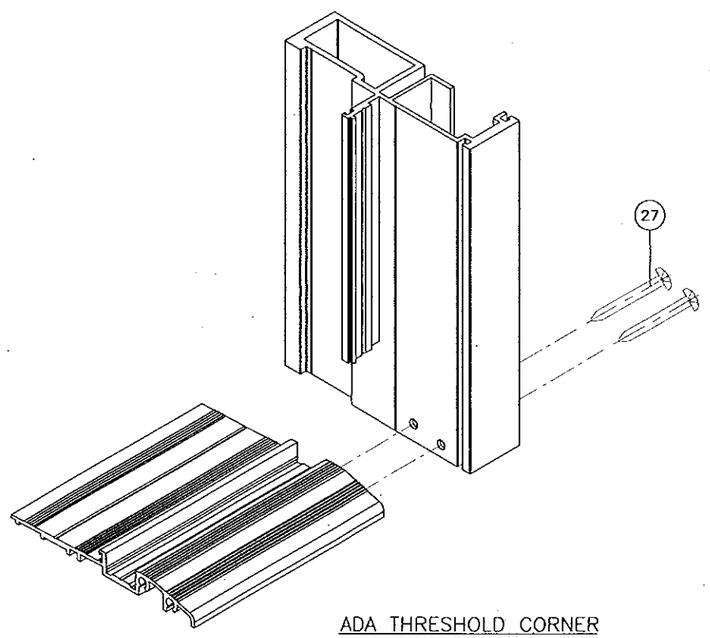


ADA THRESHOLD CORNER

Approved as complying with the
Florida Building Code
Date 08/08/14
NOA# 14-0305.07
Miami-Dade Product Control
By Ishaq I. Chaudhry

Engr: JAVAD AHMAD
CIVIL
FLA. PE # 70592
C.A.N. 3538
JUL 31 2014

AL-FAROOQ CORPORATION
ENGINEERS & PRODUCT DEVELOPMENT
1235 S.W. 87 AVE
MIAMI, FLORIDA 33174
TEL (305) 264-8100 FAX. (305) 262-6978
COMP-ANL\W13-62SIW

SERIES 500-11 ALUM OUTSWING ENTRANCE DOOR (L.M.I.)

SIW IMPACT WINDOWS, LLC.
975 S. CONGRESS AVE. #102
DELRAY BEACH, FL. 33445
TEL. (561) 274-9392 FAX. (561) 274-9262

| revisions: | | | |
|---|---|---|---|
| no | date | by | description |
| A | 07.10.14 | | REV. PER RER COMMENTS |
| B | 07.31.14 | | NO CHANGE THIS SHEET |

date: 12-31-13
scale: 3/8" = 1"
dr. by: TARIQ
chk. by:

drawing no.
W13-69

sheet 13 of 14

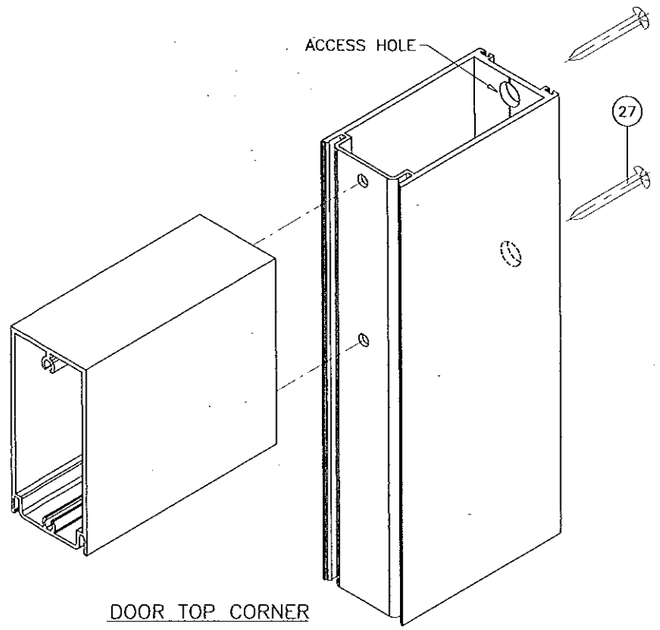


DOOR TOP CORNER

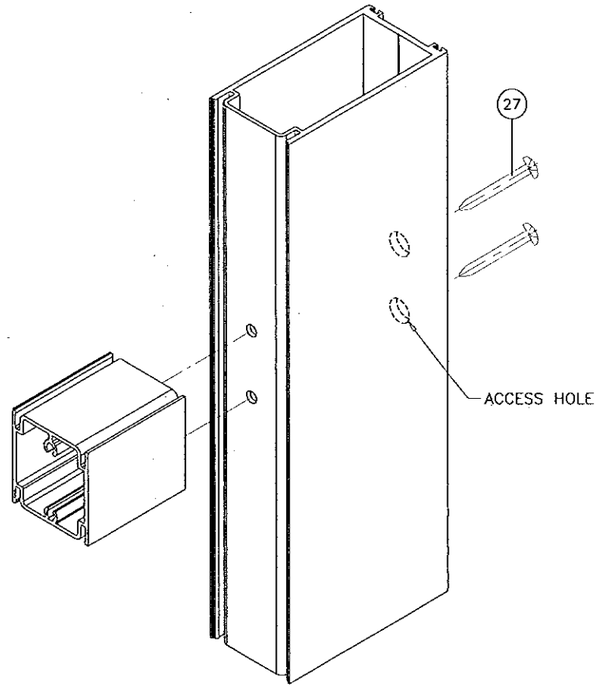


CHAIR RAIL CORNER

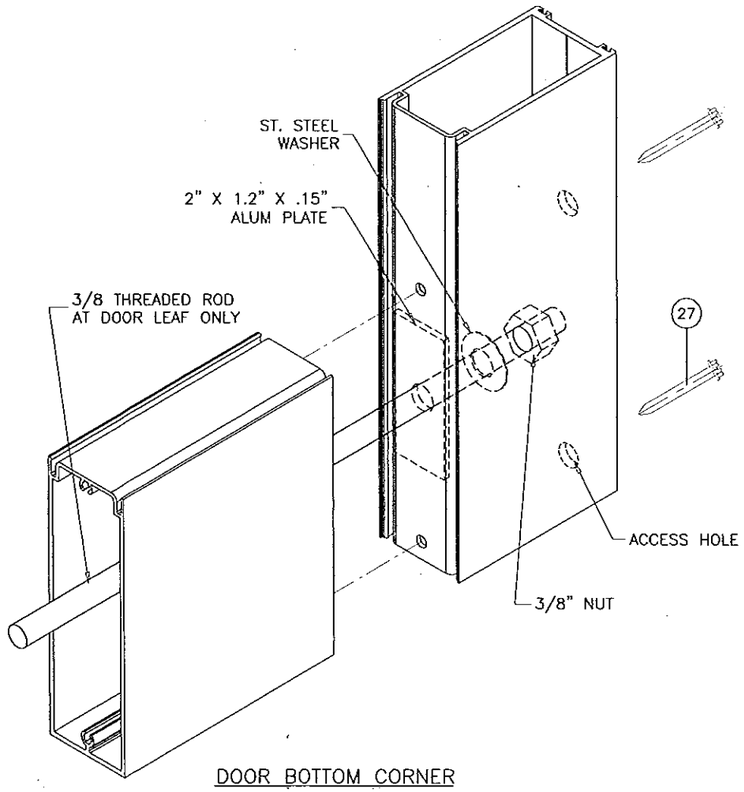


DOOR BOTTOM CORNER

Approved as complying with the Florida Building Code
Date AUGUST, 2014
NOA# 14-0307.07
Miami-Dade Product Control
By Ishaq I. Chand

Engr: JAVAD AHMAD
CIVIL
FLA. PE # 70592
C.A.N. 3538
JUL 31 2014

**AL-FAROOQ CORPORATION**
ENGINEERS & PRODUCT DEVELOPMENT
1235 S.W. 87 AVE
MIAMI, FLORIDA 33174
TEL. (305) 264-8100 FAX. (305) 262-6978
COMP-ANL\W13-62SIW

SERIES 500-11 ALUM OUTSWING ENTRANCE DOOR (1.M.I.)

SIW IMPACT WINDOWS, LLC.
975 S. CONGRESS AVE. #102
DELRAY BEACH, FL. 33445
TEL. (561) 274-9392 FAX. (561) 274-9262

revisions:

| no | date | by | description |
|---|---|---|---|
| A | 07.10.14 | | REV. PER RER COMMENTS |
| B | 07.31.14 | | NO CHANGE THIS SHEET |

date: 12-31-13
scale: 3/8" = 1"
dr. by: TARIQ
chk. by:

drawing no.
W13-69

sheet 14 of 14