MIAMI-DADE COUNTY
PRODUCT CONTROL SECTION
11805 SW 26 Street, Room 208
Miami, Florida 33175-2474
T (786) 315-2590 F (786) 315-2599
www.miamidade.gov/economy

DEPARTMENT OF REGULATORY AND ECONOMIC RESOURCES (RER)
BOARD AND CODE ADMINISTRATION DIVISION

NOTICE OF ACCEPTANCE (NOA)

SIW Impact Windows, LLC
975 S. Congress Ave. # 102
Delray Beach, Florida 33445

SCOPE:

This NOA is being issued under the applicable rules and regulations governing the use of construction materials. The documentation submitted has been reviewed and accepted by Miami-Dade County RER -Product Control Section to be used in Miami Dade County and other areas where allowed by the Authority Having Jurisdiction (AHJ).

This NOA shall not be valid after the expiration date stated below. The Miami-Dade County Product Control Section (In Miami Dade County) and/or the AHJ (in areas other than Miami Dade County) reserve the right to have this product or material tested for quality assurance purposes. If this product or material fails to perform in the accepted manner, the manufacturer will incur the expense of such testing and the AHJ may immediately revoke, modify, or suspend the use of such product or material within their jurisdiction. RER reserves the right to revoke this acceptance, if it is determined by Miami-Dade County Product Control Section that this product or material fails to meet the requirements of the applicable building code.

This product is approved as described herein, and has been designed to comply with the Florida Building Code, including the High Velocity Hurricane Zone.

DESCRIPTION: Series "500-10 " Single Aluminum Outswing Doors w/wo Sidelite

APPROVAL DOCUMENT: Drawing No. **W14-02 Rev B**, titled "Series 500-10 Alum Outswing Entrance Door (L.M.I.)", sheets 1 through 10 of 10, dated 02-05-14 and last revised on Jul 31, 2014, prepared by Al-Farooq Corporation, signed and sealed by Javad Ahmad, P. E., bearing the Miami-Dade County Product Control Approval stamp with the Notice of Acceptance number and expiration date by the Miami-Dade County Product Control Section.

MISSILE IMPACT RATING: Large and Small Missile Impact

Limitations:

1. See DP tables for X in sheets **2**, O and O/X or XO (door (w/wo Reinforcing & w/ Sidelite) in sheet **3**. Lower DP from door w/Sidelite **or** Reinforcing **or** ADA threshold **or** 4" Bottom Rail may control.
2. Max Sidelite mulled with door in sheet **3**, shall not exceed = 38".
3. Glass lites wider than 36" shall have two setting blocks per FBC requirements.

LABELING: Each unit shall bear a permanent label with the manufacturer's name or logo, city, state and series and following statement: "Miami-Dade County Product Control Approved", noted herein.

RENEWAL of this NOA shall be considered after a renewal application has been filed and there has been no change in the applicable building code negatively affecting the performance of this product.

TERMINATION of this NOA will occur after the expiration date or if there has been a revision or change in the materials, use, and/or manufacture of the product or process. Misuse of this NOA as an endorsement of any product, for sales, advertising or any other purposes shall automatically terminate this NOA. Failure to comply with any section of this NOA shall be cause for termination and removal of NOA.

ADVERTISEMENT: The NOA number preceded by the words Miami-Dade County, Florida, and followed by the expiration date may be displayed in advertising literature. If any portion of the NOA is displayed, then it shall be done in its entirety.

INSPECTION: A copy of this entire NOA shall be provided to the user by the manufacturer or its distributors and shall be available for inspection at the job site at the request of the Building Official.

This NOA consists of this page 1 and evidence pages E-1 & E-2, as well as approval document mentioned above.

The submitted documentation was reviewed by **Ishaq I. Chanda, P.E.**

MIAMI-DADE COUNTY APPROVED

8/11/14

NOTICE OF ACCEPTANCE: EVIDENCE SUBMITTED

A. DRAWINGS

1. Manufacturer's die drawings and sections.
2. Drawing No. **W14-02 Rev B**, titled "Series 500-10 Alum Outswing Entrance Door (L.M.I.)", sheets 1 through 10 of 10, dated 02-05-14 and last revised on Jul 31, 2014, prepared by Al-Farooq Corporation, signed and sealed by Javad Ahmad, P.E.

B. TESTS

1. Test reports on: 1) Air Infiltration Test, per FBC, TAS 202-94
   2) Uniform Static Air Pressure Test, Loading per FBC TAS 202-94
   3) Water Resistance Test, per FBC, TAS 202-94
   4) Large Missile Impact Test per FBC, TAS 201-94
   5) Cyclic Wind Pressure Loading per FBC, TAS 203-94
   6) Forced Entry Test, per FBC 2411 3.2.1, TAS 202-94

   Along with installation diagram of Single Aluminum Outswing doors w/ sidelite, prepared by Black Water Testing Inc., Test reports # **BT-SIW-13-010, BT-SIW-13-010(2), BT-SIW-13-011, BT-SIW-13-011(2), BT-SIW-13-012** and **BT-SIW-13-013** dated OCT 29, 2013 and December 11, 2013, all signed and sealed by Yamil Kuri, P.E.
   Note: The test reports **#BT-SIW-13-010(2)** and **#BT-SIW-13-011(2)** have been revised by an addendum letter dated 05/09/14, issued by Black Water Testing Inc., signed and sealed by Yamil Kuri, P.E.
2. Additional Reference Test reports on: 1) Air Infiltration Test, per FBC, TAS 202-94
   2) Uniform Static Air Pressure Test, Loading per FBC TAS 202-94
   3) Water Resistance Test, per FBC, TAS 202-94
   4) Large Missile Impact Test per FBC, TAS 201-94
   5) Cyclic Wind Pressure Loading per FBC, TAS 203-94
   6) Forced Entry Test, per FBC 2411 3.2.1, TAS 202-94

   Along with installation diagram of aluminum Outswing doors w/wo sidelite and transom, prepared by Black Water Testing Inc., Test reports **#BT-SIW-13-001** and **BT-SIW-13-006** dated June 10, 2013 and December 11, 2013, both signed and sealed by Yamil Kuri, P.E.
   Note: The above test reports have been revised by an addendum letter dated 05/09/14, issued by Black Water Testing Inc., signed and sealed by Yamil Kuri, P.E
3. Additional Reference Test reports on: 1) Air Infiltration Test, per FBC, TAS 202-94
   2) Uniform Static Air Pressure Test, Loading per FBC TAS 202-94
   3) Water Resistance Test, per FBC, TAS 202-94
   4) Large Missile Impact Test per FBC, TAS 201-94
   5) Cyclic Wind Pressure Loading per FBC, TAS 203-94
   6) Forced Entry Test, per FBC 2411 3.2.1, TAS 202-94

   Along with installation diagram of aluminum Inswing / Outswing doors w/wo sidelite and transom, prepared by Hurricane Engineering and Testing, Test Report No. HETI 07-4339, HETI 07-4371, HETI 07-4371, HETI 07-4372, HETI 07-4373and HETI 07-4374 dated 01/03/08, HETI-08-2184A & B dated 10/01/08, HETI 09-2572A, HETI 09-2573 dated June 30, 2009, all signed and sealed by Candido Font, P.E.

Ishaq I. Chanda

Ishaq I. Chanda, P.E.
Product Control Examiner
NOA No. 14-0305.08
Expiration Date: May 22, 2018
Approval Date: August 08, 2014

NOTICE OF ACCEPTANCE: EVIDENCE SUBMITTED

C. CALCULATIONS

1. Anchor verification calculations complying with FBC2014, prepared by Al Farooq Corporation, dated FEB 17, 2014, Jul 11, 2014 and last revised on Jul 31, 2014, signed and sealed by Javad Ahmad, P.E.
2. Glazing complies w/ ASTME-1300-04 & -09

D. QUALITY ASSURANCE

1. Miami Dade Department of Regulatory and Economic Resources (RER).

E. MATERIAL CERTIFICATIONS

1. Notice of Acceptance No. **11-0624.02** issued to E.I. DuPont DeNemours & Co., Inc. for their "**DuPont Sentry Glass ® interlayer**", expiring on 01/14/17.

F. STATEMENTS

1. Statement letter of conformance to FBC 2014 (**5th Edition**) and letter of no financial interest, prepared by Al Farooq Corporation, dated 07/11/14, signed and sealed by Javad Ahmad, P.E.
2. Lab compliance as part of the above referenced test reports.
3. Addendum letter dated 05/09/14 ref **#BT-SIW-13-010(2)** and **BT-SIW-13-011(2)**, issued by Black Water Testing Inc., signed and sealed by Yamil Kuri, P.E
4. Addendum letter dated 05/09/14 ref **#BT-SIW-13-001** and **BT-SIW-13-006**, issued by Black Water Testing Inc., signed and sealed by Yamil Kuri, P.E.
5. Addendum letter ref HETI-07-4374 dated May 06, 2008, issued by HETI, signed and sealed by Candido Font, P.E.

G. OTHER

1. Ref NOA(s) # 13-0220.06 & #14-0305.06.
2. Test proposal dated 08/13/13, approved by RER
3. Test proposal dated 05/23/13, approved by RER.

Ishaq I. Chanda

Ishaq I. Chanda, P.E.
Product Control Examiner
NOA No. 14-0305.08
Expiration Date: May 22, 2018
Approval Date: August 08, 2014

THESE DOORS ARE RATED FOR LARGE & SMALL MISSILE IMPACT.
SHUTTERS ARE NOT REQUIRED.

SERIES 500-10
ALUMINUM OUTSWING ENTRANCE DOOR

APPROVAL APPLIES TO SINGLE (X) DOORS WITH OR WITHOUT SIDELITE.
SEE SHEET 2 FOR SINGLE DOORS DESIGN LOAD CAPACITIES.
SEE SHEET 3 FOR SINGLE STATIONARY PANEL LOAD CAPACITY AND SIDELITE CONFIGURATIONS.

DOORS APPROVED FOR INSTALLATIONS WHERE WATER INFILTRATION RESISTANCE IS REQUIRED.
SEE SHEET 4 FOR LIMITATIONS.

THIS PRODUCT HAS BEEN DESIGNED AND TESTED TO COMPLY WITH THE REQUIREMENTS OF THE FLORIDA BUILDING CODE INCLUDING HIGH VELOCITY HURRICANE ZONE (HVHZ).

1BY OR 2BY WOOD BUCKS BY OTHERS, MUST BE ANCHORED PROPERLY TO TRANSFER LOADS TO THE STRUCTURE.

ANCHORS SHALL BE AS LISTED, SPACED AS SHOWN ON DETAILS, ANCHORS EMBEDMENT TO BASE MATERIAL SHALL BE BEYOND WALL DRESSING OR STUCCO.

ANCHORING OR LOADING CONDITIONS NOT SHOWN IN THESE DETAILS ARE NOT PART OF THIS APPROVAL.

SILICONE TO BE APPLIED TO ENTIRE FRAME PERIMETER.

A LOAD DURATION INCREASE IS USED IN DESIGN OF ANCHORS INTO WOOD ONLY.

MATERIALS INCLUDING BUT NOT LIMITED TO STEEL/METAL SCREWS, THAT COME INTO CONTACT WITH OTHER DISSIMILAR MATERIALS SHALL MEET THE REQUIREMENTS OF THE FLORIDA BLDG. CODE.

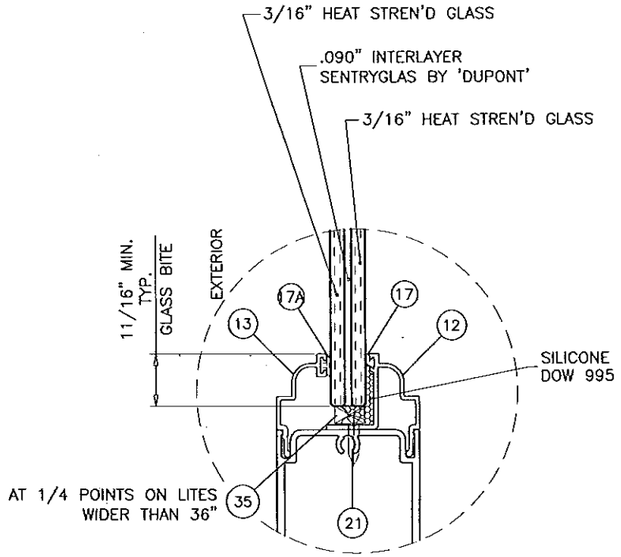

GLAZING DETAIL
7/16" OVERALL LAM. GLASS

Approved as complying with the Florida Building Code
Date AUG 01 2014
NOA# 14-0305.02
Miami Dade Product Control
By

Engr: JAVAD AHMAD
CIVIL
FLA. PE # 70592
C.A.N. 3538
JUL 31 2014

AL-FAROOQ CORPORATION
ENGINEERS & PRODUCT DEVELOPMENT
1235 S.W. 87 AVE
MIAMI, FLORIDA 33174
TEL. (305) 264-8100 FAX. (305) 262-6978
COMP-ANL\W13-62SIW

SERIES 500-10 ALUM OUTSWING ENTRANCE DOOR (L.M.I.)

SIW IMPACT WINDOWS, LLC.
975 S. CONGRESS AVE. #102
DELRAY BEACH, FL. 33445
TEL. (561) 274-9392 FAX. (561) 274-9262

revisions:

no	date	by	description
A	05.21.14		REV. PER RER COMMENTS
B	07.31.14		REV. PER RER COMMENTS

date: 02-05-14
scale: 3/8" = 1"
dr. by: TARIQ
chk. by:

drawing no.
W14-02

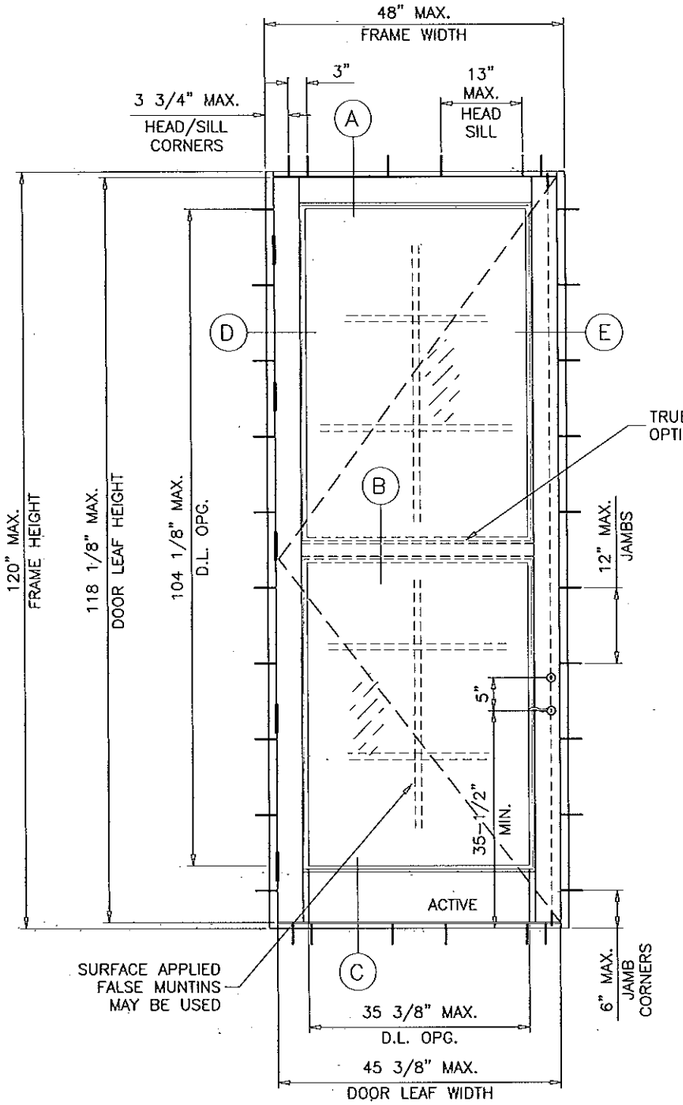

TYPICAL ELEVATION

(X)

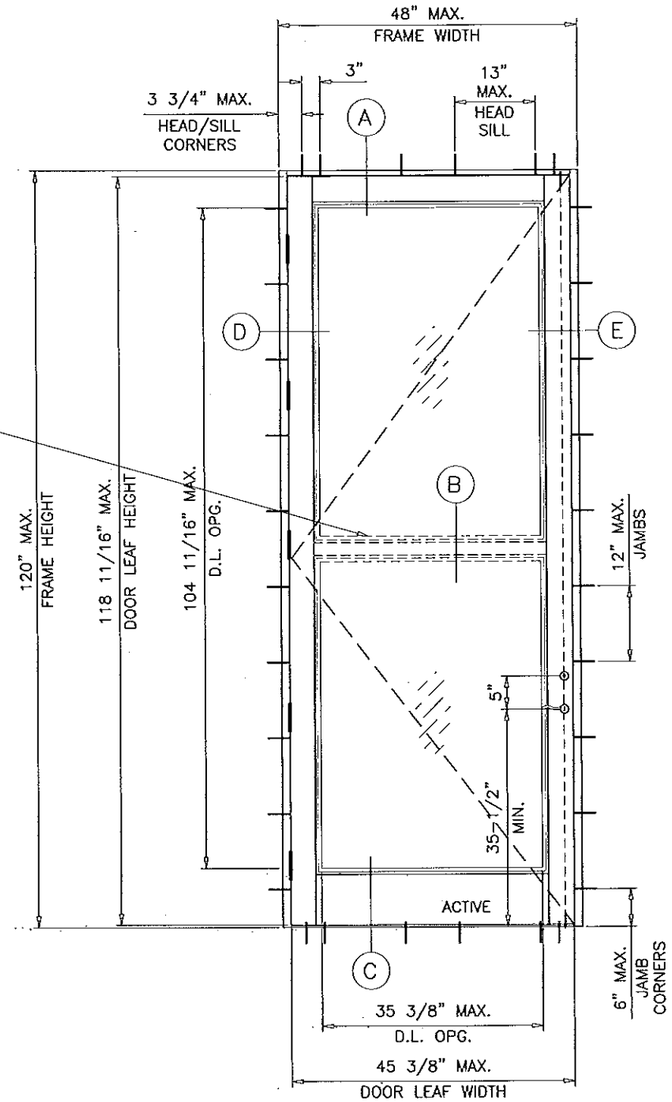

TYPICAL ELEVATION

(X)

DOOR OPTIONS

DOORS LOAD CAPACITY – PSF SINGLE DOORS (X)			
DOOR DIMS.		STD. THRESHOLD TALL BOTTOM RAIL	
FRAME WIDTH	FRAME HEIGHT	EXT.(+)	INT.(–)
48"	120"	55.0	55.0

DOORS LOAD CAPACITY – PSF SINGLE DOORS (X)			
DOOR DIMS.		ADA THRESHOLD	
FRAME WIDTH	FRAME HEIGHT	EXT.(+)	INT.(–)
48"	120"	50.0	50.0

DOORS USING 4" HIGH PANEL BOTTOM RAIL (SIW502) TO BE LIMITED TO ±50 PSF
SEE SHEET 4 FOR EXT.(+) LOAD LIMITATIONS.

NOTE:
VERIFY COMPLIANCE WITH EGRESS LIMITATIONS WHERE REQUIRED.

DOOR D.L.O. DIMS.
D.L.O. HEIGHT = FRAME HEIGHT – 15.875"
D.L.O. WIDTH (X DOORS) = FRAME WIDTH – 12.625"

DOOR D.L.O. DIMS.
D.L.O. HEIGHT = FRAME HEIGHT – 15.313"
D.L.O. WIDTH (X DOORS) = FRAME WIDTH – 12.625"

Approved as complying with the Florida Building Code
Date 08/08/14
NOA# 14-0305.08
Miami Dade Product Control
By [signature]

NOTE:
GLASS CAPACITIES ON THIS SHEET ARE BASED ON ASTM E1300-09 (3 SEC. GUSTS) AND FLORIDA BUILDING COMMISSION DECLARATORY STATEMENT DCA05-DEC-219

Engr: JAVAD AHMAD
CIVIL
FLA. PE # 70592
C.A.N. 3538
JUL 31 2014

AL-FAROOQ CORPORATION
ENGINEERS & PRODUCT DEVELOPMENT
1235 S.W. 87 AVE
MIAMI, FLORIDA 33174
TEL. (305) 264-8100 FAX. (305) 262-6978

COMP-ANL\W13-62SIW

SERIES 500-10 ALUM OUTSWING ENTRANCE DOOR (L.M.I.)

SIW IMPACT WINDOWS, LLC.
975 S. CONGRESS AVE. #102
DELRAY BEACH, FL. 33445
TEL. (561) 274-9392 FAX. (561) 274-9262

revisions:

no	date	by	description
A	05.21.14		REV. PER RER COMMENTS
B	07.31.14		REV. PER RER COMMENTS

date: 02-05-14
scale: 3/8" = 1"
dr. by: TARIQ
chk. by:

drawing no.
W14-02

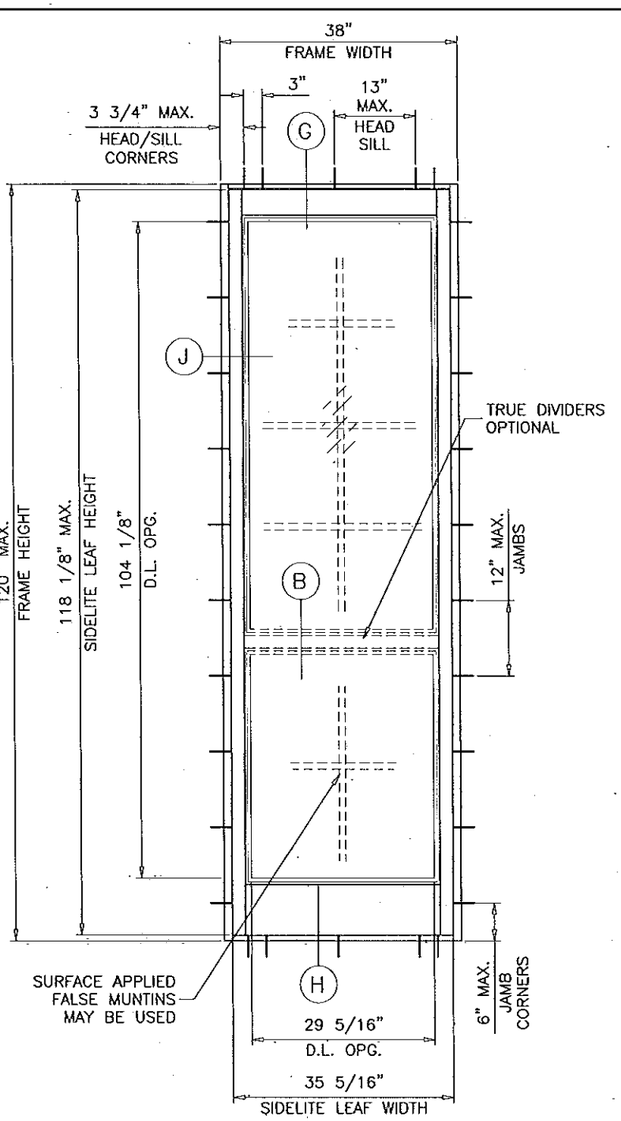

TYPICAL ELEVATION

(O)

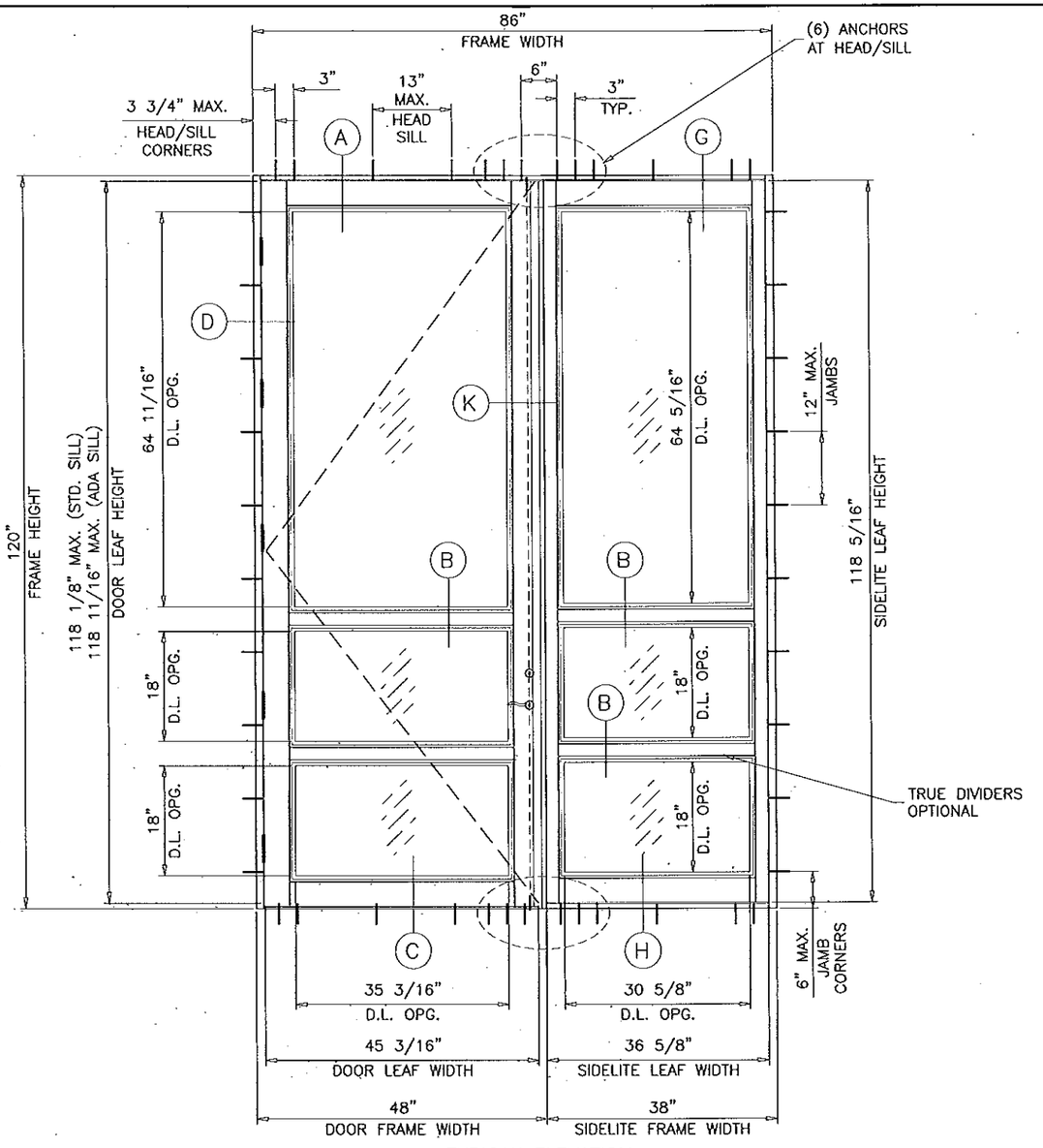

TYPICAL ELEVATION

(XO)

SIDELITE LOAD CAPACITY – PSF STATIONARY PANEL (0)			
DOOR DIMS.		STD. THRESHOLD TALL BOTTOM RAIL	
FRAME WIDTH	FRAME HEIGHT	EXT.(+)	INT.(–)
38"	120"	55.0	55.0

DOOR WITH SIDELITE LOAD CAPACITY – PSF XO OR OX COMBINATIONS									
DIMS.			WITH REINFORCING				WITHOUT REINFORCING		
			STD. THRESHOLD TALL BOTTOM RAIL		ADA THRESHOLD		STD. OR ADA THRESHOLD		
DOOR FRAME WIDTH	SIDELITE FRAME WIDTH	FRAME HEIGHT	EXT.(+)	INT.(–)	EXT.(+)	INT.(–)	EXT.(+)	INT.(–)	
48"	38"	120"	55.0	55.0	50.0	50.0	48.0	48.0	

DOORS AND SIDELITES USING 4" HIGH PANEL BOTTOM RAIL (SIW502) TO BE LIMITED TO ±50 PSF
SEE SHEET 4 FOR EXT.(+) LOAD LIMITATIONS.

SIDELITE D.L.O. DIMS.

D.L.O. HEIGHT = FRAME HEIGHT – 13.875"
D.L.O. WIDTH = FRAME WIDTH – 8.687

Approved as complying with the Florida Building Code
Date 08/08/14
NOA# 14-0320.08
Miami Dade Product Control
By

Engr: JAVAD AHMAD
CIVIL
FLA. PE # 70592
C.A.N. 0538
JUL 31 2014

AL-FAROOQ CORPORATION
ENGINEERS & PRODUCT DEVELOPMENT
1235 S.W. 87 AVE
MIAMI, FLORIDA 33174
TEL. (305) 264-8100 FAX. (305) 262-6978

COMP–ANL\W13–62SIW

SERIES 500–10 ALUM OUTSWING ENTRANCE DOOR (L.M.I.)

SIW IMPACT WINDOWS, LLC.
975 S. CONGRESS AVE. #102
DELRAY BEACH, FL. 33445
TEL. (561) 274–9392 FAX. (561) 274–9262

revisions:

no	date	by	description
A	05.21.14		REV. PER RER COMMENTS
B	07.31.14		REV. PER RER COMMENTS

date: 02–05–14
scale: 3/8" = 1"
dr. by: TARIQ
chk. by:

drawing no.
W14–02

sheet 3 of 10

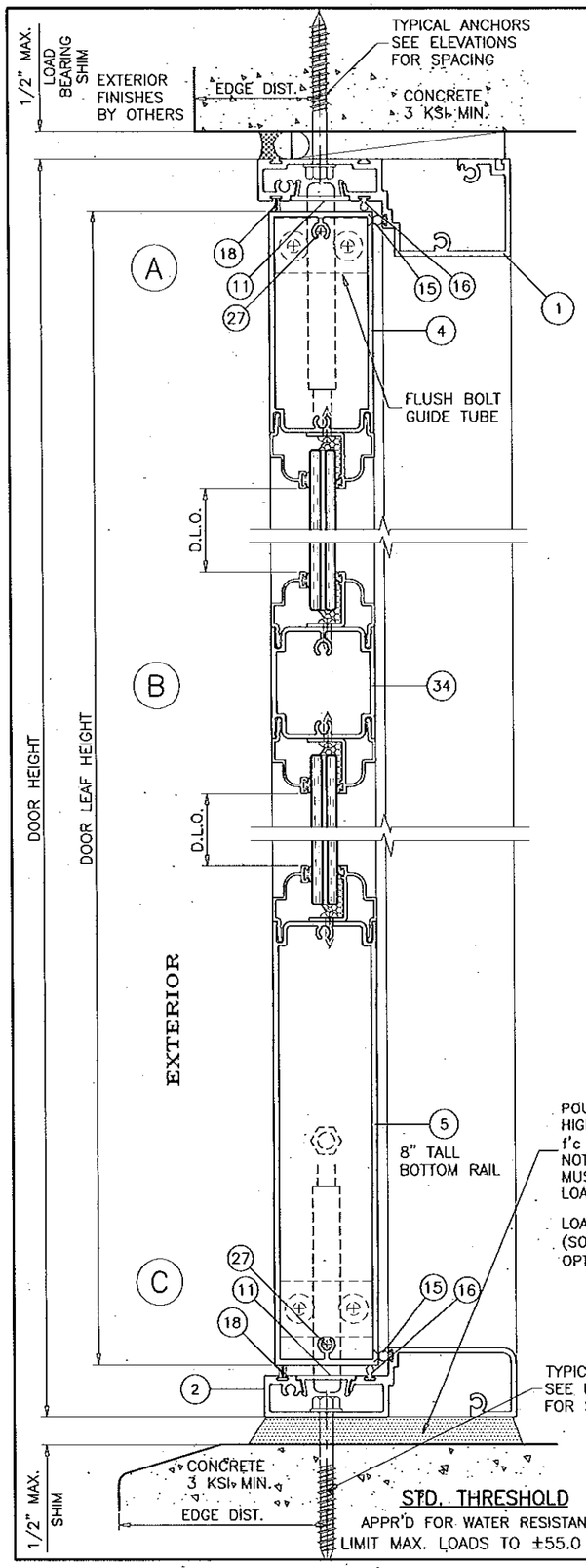

STD. THRESHOLD

APPR'D FOR WATER RESISTANCE
LIMIT MAX. LOADS TO ±55.0 PSF

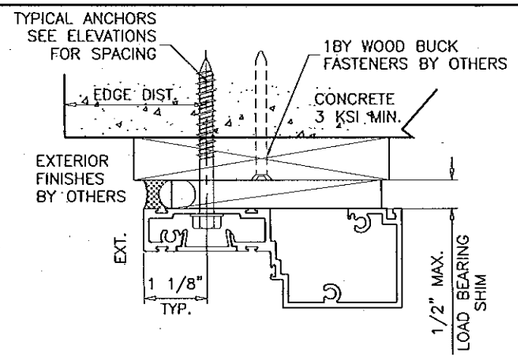

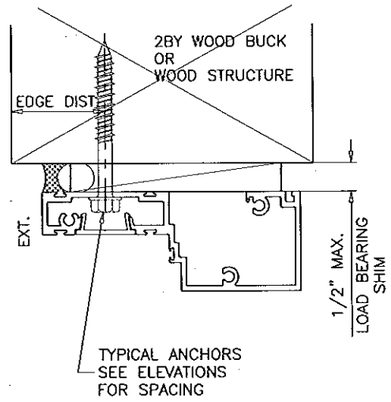

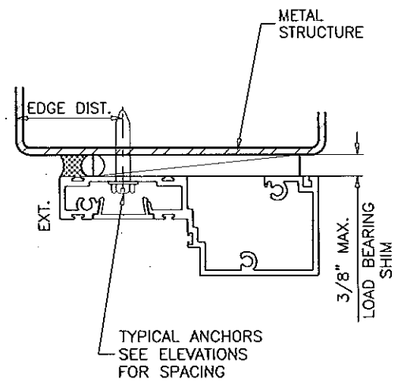

WOOD BUCKS AND METAL STRUCTURE NOT BY SIW WINDOWS MUST SUSTAIN LOADS IMPOSED BY GLAZING SYSTEM AND TRANSFER THEM TO THE BUILDING STRUCTURE.

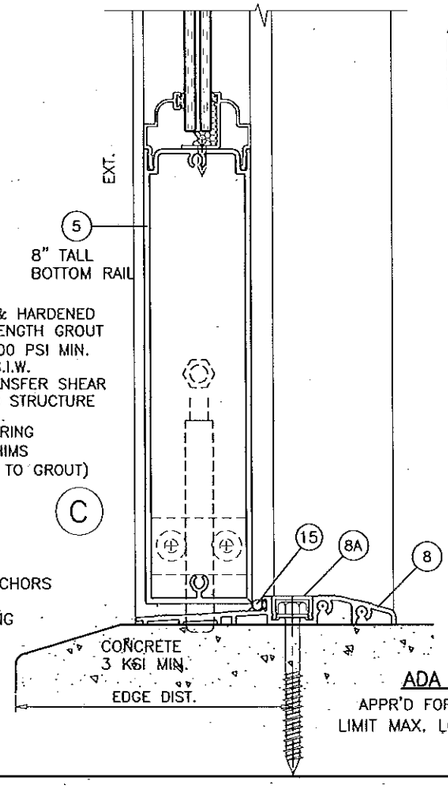

ADA THRESHOLD

APPR'D FOR WATER RESISTANCE
LIMIT MAX. LOADS TO ±50.0 PSF

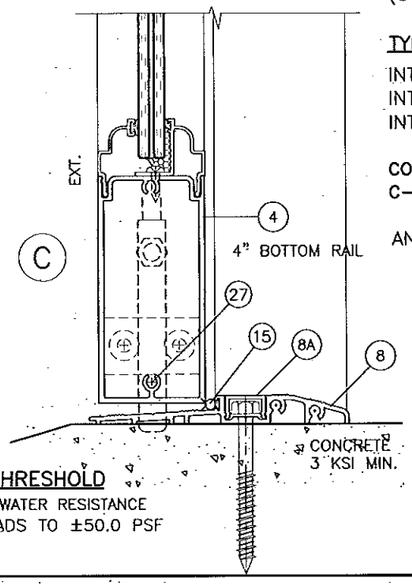

Approved as complying with the Florida Building Code
Date 08/08/14
NOA# 14-0205.03
Miami Dade Product Control
By

TYPICAL ANCHORS: SEE ELEV. FOR SPACING

TYPE 'A'– 1/4" DIA. ULTRACON BY 'ELCO' (Fu=177 KSI, Fy=155 KSI)
MIN. LENGTH = 2–3/4"

INTO 2BY WOOD BUCKS OR WOOD STRUCTURES
1–1/2" MIN. PENETRATION INTO WOOD (HEAD/JAMBS)

THRU 1BY BUCKS INTO CONC. OR MASONRY
1–3/4" MIN. EMBED INTO CONCRETE (HEAD/SILL)
1–1/4" MIN. EMBED INTO CONC. OR MASONRY (JAMBS)

TYPE 'B'– 1/4" DIA. ULTRACON BY 'ELCO' (Fu=177 KSI, Fy=155 KSI)
MIN. LENGTH = 2–3/4"

DIRECTLY INTO CONC. OR MASONRY
1–3/4" MIN. EMBED INTO CONCRETE (HEAD/SILL)
1–1/4" MIN. EMBED INTO CONC. OR MASONRY (JAMBS)

TYPE 'C'– #14 DIA. SELF DRILLING SCREWS (Fu=120 KSI, Fy=90 KSI)
INTO MIAMI–DADE COUNTY APPROVED MULLIONS (MIN. THK. = 1/8")
INTO METAL STRUCTURES (HEAD/SILL/JAMBS)
STEEL : 12 GA. MIN. (Fy = 36 KSI MIN.)
ALUMINUM : 1/8" THK. MIN. (6063–T5 MIN.)
(STEEL IN CONTACT WITH ALUMINUM TO BE PLATED OR PAINTED)

TYPICAL EDGE DISTANCE

INTO CONCRETE AND MASONRY = 2–1/2" MIN.
INTO WOOD STRUCTURE = 1" MIN.
INTO METAL STRUCTURE = 3/4" MIN.

CONCRETE AT HEAD, SILL OR JAMBS f'c = 3000 PSI MIN.
C–90 HOLLOW/FILLED BLOCK AT JAMBS f'm = 2000 PSI MIN.

ANCHORS MAY BE HEX OR FLAT HEAD.

Engr: JAVAD AHMAD
CIVIL
FLA. PE # 70592
C.A.N. 3538

JUL 31 2014

DOOR DETAILS

AL-FAROOQ CORPORATION
ENGINEERS & PRODUCT DEVELOPMENT
1235 S.W. 87 AVE
MIAMI, FLORIDA 33174
TEL. (305) 264-8100 FAX. (305) 262-6978

COMP–ANL\W13–62SIW

SERIES 500–10 ALUM OUTSWING ENTRANCE DOOR (L.M.I.)

SIW IMPACT WINDOWS, LLC.
975 S. CONGRESS AVE. #102
DELRAY BEACH, FL. 33445
TEL. (561) 274–9262 FAX. (561) 274–9392

revisions:

no	date	by	description
A	05.21.14	RER	REV. PER COMMENTS
B	07.31.14	RER	REV. PER COMMENTS

date: 02–05–14
scale: 3/8" = 1"
dr. by: TARIQ
chk. by:

drawing no.
W14–02

sheet 4 of 10

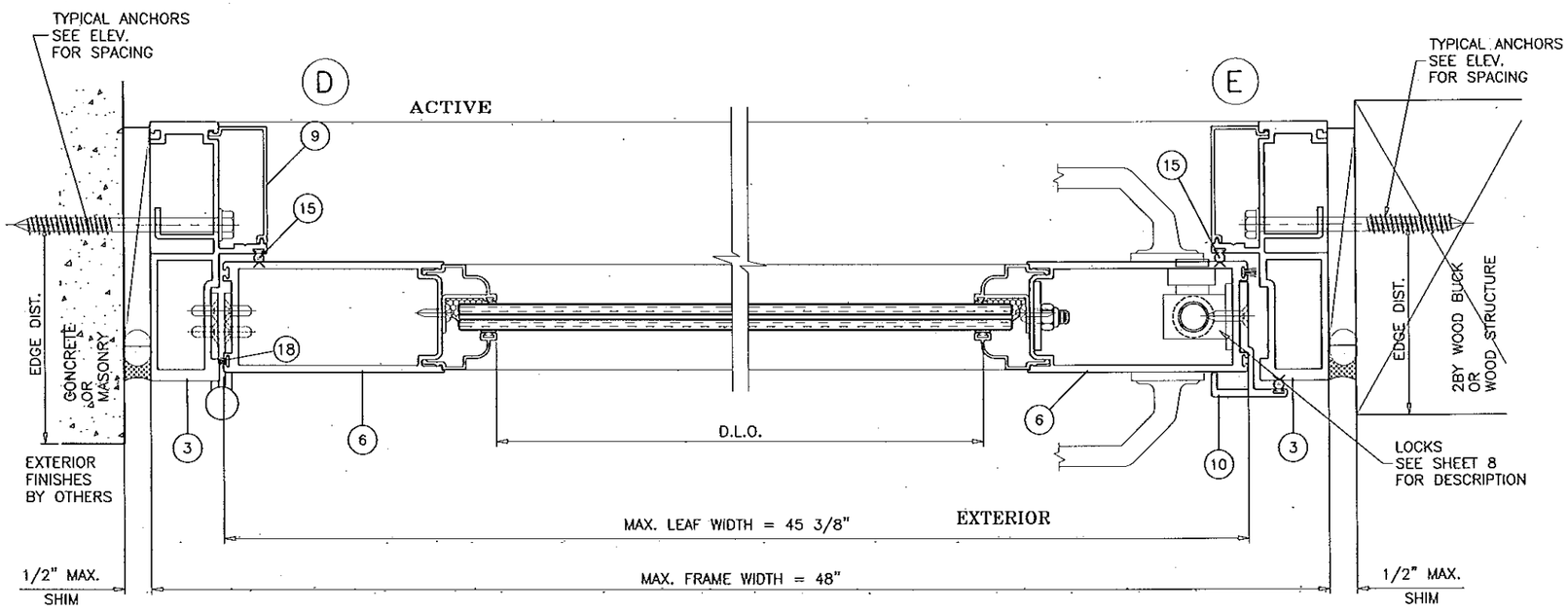

(X)

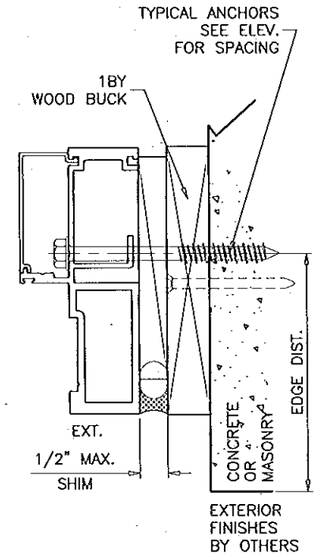

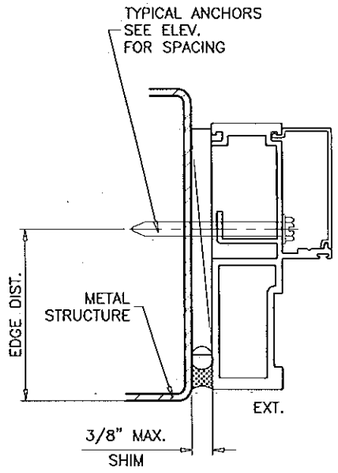

Approved as complying with the
Florida Building Code
Date 05/08/14
NOA# 14-0304.09
Miami Dade Product Control
By

Engr: JAVAD AHMAD
CIVIL
FLA. PE # 70592
C.M.N. 3538
JUL 31 2014

DOOR DETAILS

AL-FAROOQ CORPORATION
ENGINEERS & PRODUCT DEVELOPMENT
1235 S.W. 87 AVE
MIAMI, FLORIDA 33174
TEL. (305) 264-8100 FAX. (305) 262-6978

COMP-ANL\W13-62SIW

SERIES 500-10 ALUM OUTSWING ENTRANCE DOOR (L.M.I.)

SIW IMPACT WINDOWS, LLC.
975 S. CONGRESS AVE. #102
DELRAY BEACH, FL. 33445
TEL. (561) 274-9392 FAX. (561) 274-9262

revisions:

no	date	by	description
A	05.21.14		REV. PER RER COMMENTS
B	07.31.14		NO CHANGE THIS SHEET

date: 02-05-14
scale: 3/8" = 1"
dr. by: TARIQ
chk. by:

drawing no.
W14-02

sheet 5 of 10

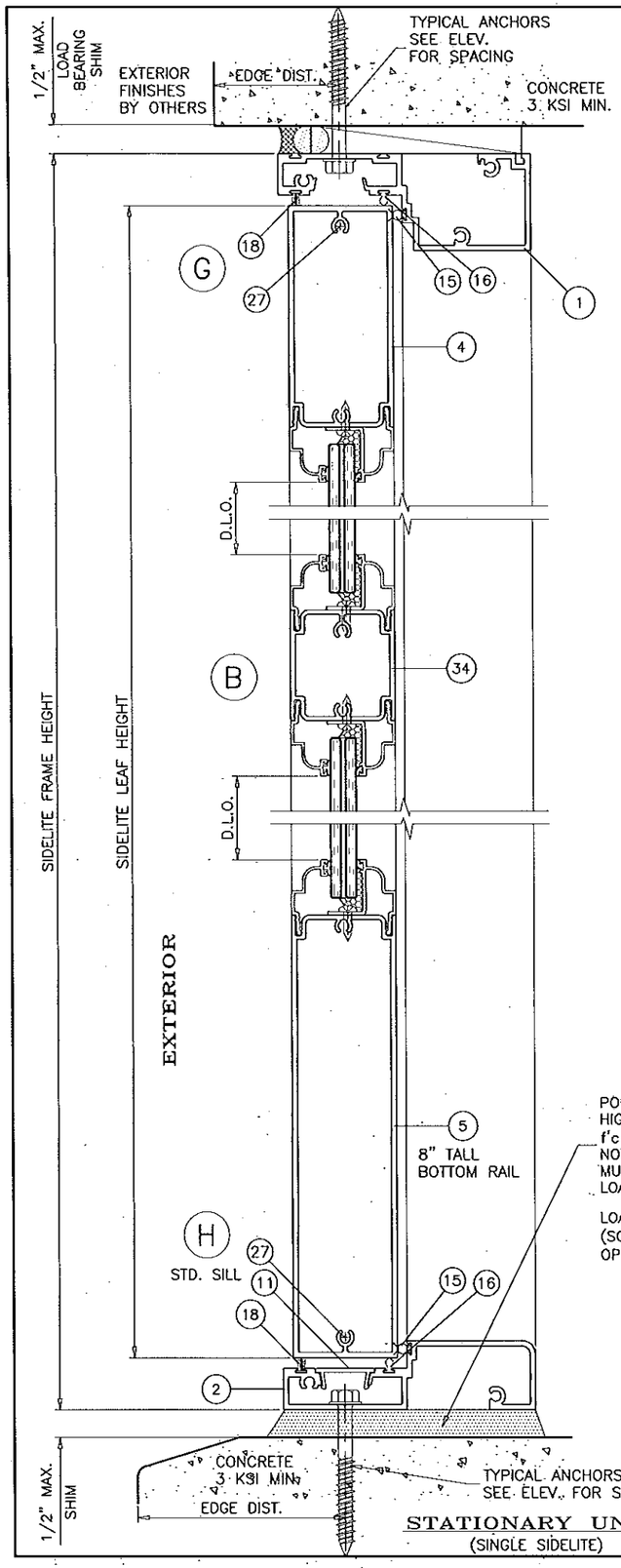

STATIONARY UNITS
(SINGLE SIDELITE)

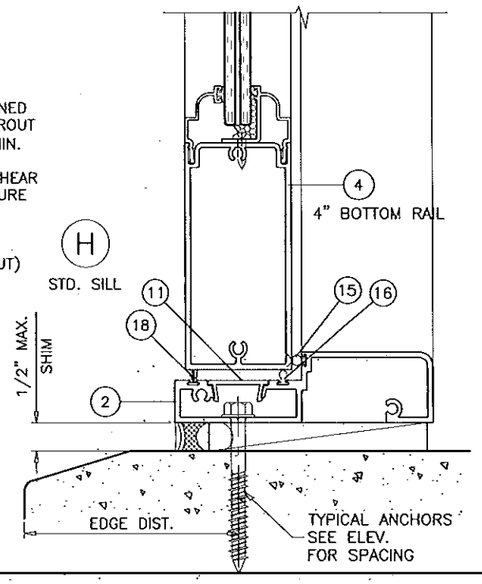

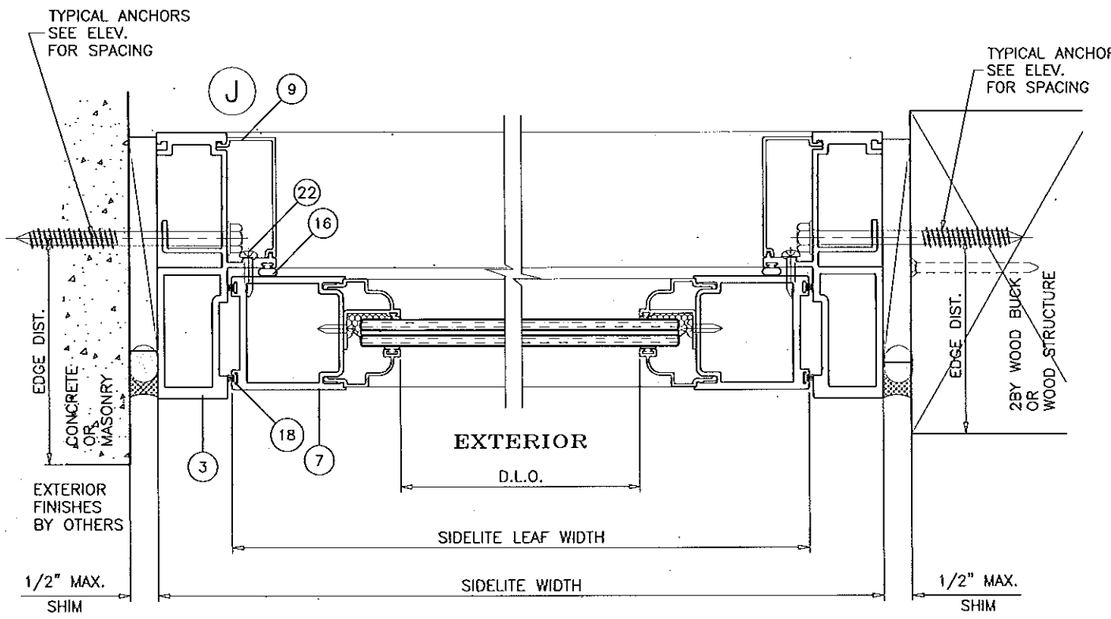

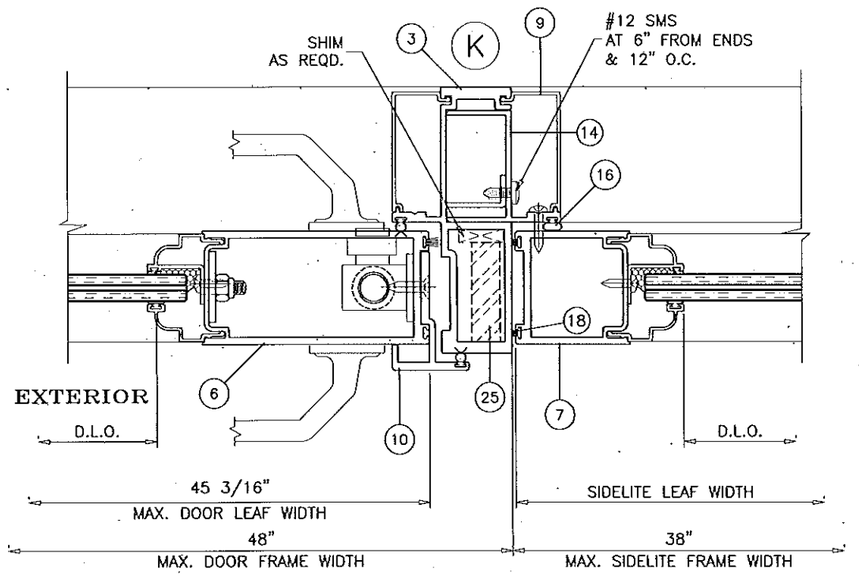

MULLED DOOR/SIDELITE

Approved as complying with the Florida Building Code
Date 06/08/14
NOA# 14-0305.09
Miami Dade Product Control
By Ishaq I. Chanda

Engr: JAVAD AHMAD
CIVIL
FLA. PE # 70592
C.A.N. 3538
JUL 31 2014

SIDELITE DETAILS

AL-FAROOQ CORPORATION
ENGINEERS & PRODUCT DEVELOPMENT
1235 S.W. 87 AVE
MIAMI, FLORIDA 33174
TEL. (305) 264-8100 FAX. (305) 262-6978

COMP-ANL\W13-62SIW

SERIES 500-10 ALUM. OUTSWING ENTRANCE DOOR (L.M.I.)

SIW IMPACT WINDOWS, LLC.
975 S. CONGRESS AVE. #102
DELRAY BEACH, FL. 33445
TEL. (561) 274-9392 FAX. (561) 274-9262

revisions:			
no	date	by	description
A	05.21.14	RER	REV. PER COMMENTS
B	07.31.14	RER	REV. PER COMMENTS

date: 02-05-14
scale: 3/8" = 1"
dr. by: TARIQ
chk. by:

drawing no.
W14-02

sheet 6 of 10

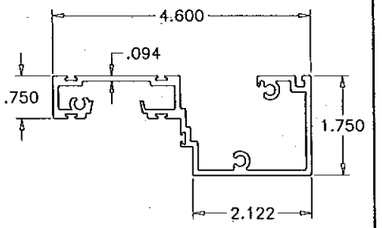

(1) DOOR/SIDELITE FRAME HEAD

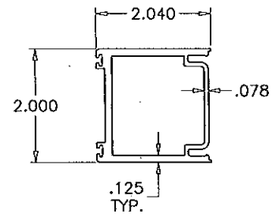

(7) SIDELITE SASH STILE

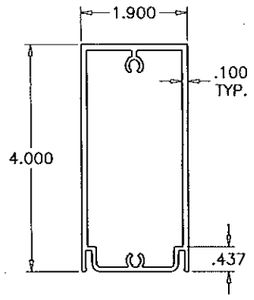

(4) TOP RAIL/BOTTOM RAIL

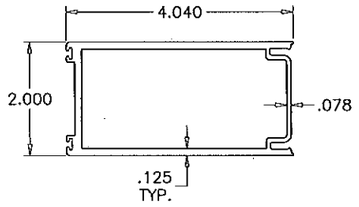

(6) HINGE/LOCK STILE

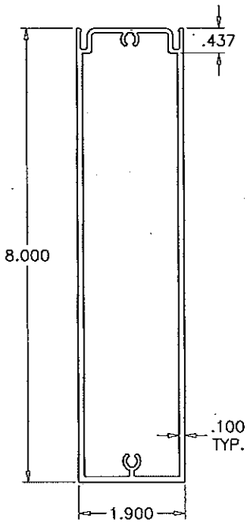

(5) BOTTOM RAIL

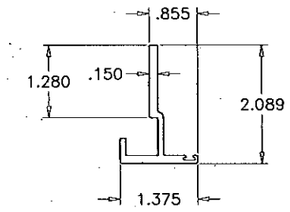

(10) DOOR ASTRAGAL

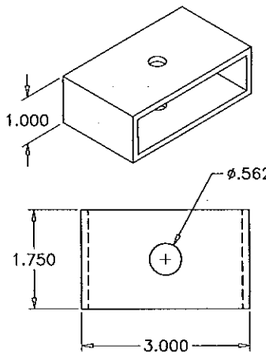

(31) FLUSH BOLT BLOCK

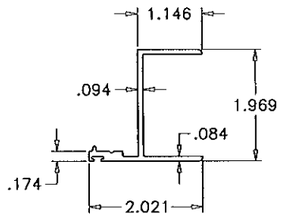

(14) JAMB/MULL ADAPTER

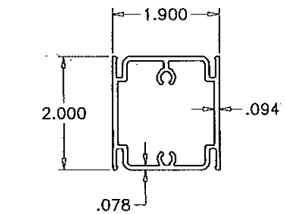

(34) CHAIR RAIL

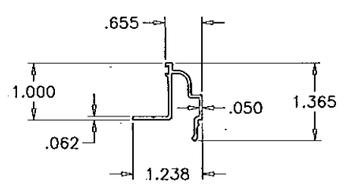

(12) INT. GLASS STOP (LAM. GLASS)

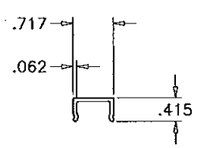

(8A) THRESHOLD COVER

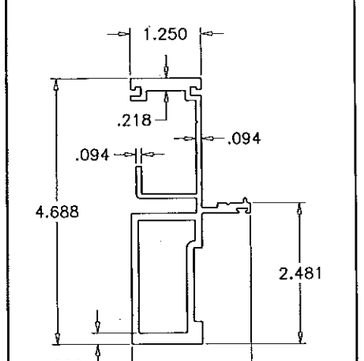

(3) FRAME JAMB

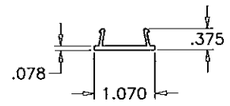

(11) SNAP COVER

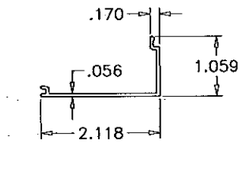

(9) JAMB SCREW COVER

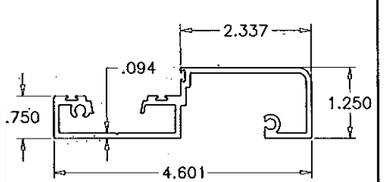

(2) STANDARD THRESHOLD

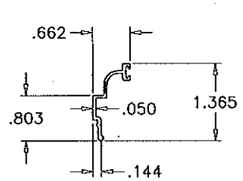

(13) EXTERIOR GLASS STOP

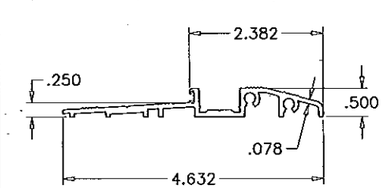

(8) ADA THRESHOLD

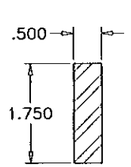

(25) STEEL REINF.

Approved as complying with the Florida Building Code
Date 08/05/14
NOA# 14-0205.03
Miami Dade Product Control
By

Engr: JAVAD AHMAD
CIVIL
FLA. PE # 70592
C.A.N. 3538
JUL 31 2014

AL-FAROOQ CORPORATION
ENGINEERS & PRODUCT DEVELOPMENT
1235 S.W. 87 AVE
MIAMI, FLORIDA 33174
TEL (305) 264-8100 FAX. (305) 262-6978

COMP-ANL\W13-62SIW

SERIES 500-10 ALUM OUTSWING ENTRANCE DOOR (L.M.I.)

SIW IMPACT WINDOWS, LLC.
975 S. CONGRESS AVE. #102
DELRAY BEACH, FL. 33445
TEL. (561) 274-9392 FAX. (561) 274-9262

revisions:			
no	date	by	description
A	05.21.14		REV. PER RER COMMENTS
B	07.31.14		NO CHANGE THIS SHEET

date: 02-05-14
scale: 3/8" = 1"
dr. by: TARIQ
chk. by:

drawing no.
W14-02

sheet 7 of 10

ITEM #	PART #	REQD.	DESCRIPTION	MATERIAL	MANF./SUPPLIER/REMARKS
1	SIW505	1	DOOR/SIDELITE FRAME HEAD	6063-T6	–
2	SIW515	1	LOW RISE FRAME SILL	6063-T6	–
3	SIW506	2/DOOR	FRAME JAMB	6063-T6	–
4	SIW502	1/ LEAF	DOOR TOP RAIL/BOTTOM RAIL	6063-T6	–
5	SIW536	1/ LEAF	DOOR BOTTOM RAIL	6063-T6	–
6	SIW503	2/ LEAF	HINGE STILE/LOCK STILE	6063-T6	–
7	SIW507	2/ LEAF	SIDELITE SASH STILE	6063-T6	–
8	SIW546	1	ADA THRESHOLD	6063-T6	–
8A	SIW547	1	THRESHOLD COVER	6063-T6	–
9	SIW511	AS REQD.	JAMB SCREW COVER	6063-T6	–
10	SIW535	AS REQD.	DOOR ASTRAGAL	6063-T6	–
11	SIW510	AS REQD.	SCREW COVER	6063-T5	–
12	SIW512	AS REQD.	INTERIOR GLASS STOP (LAM. GLASS)	6063-T5	–
13	SIW513	AS REQD.	EXTERIOR GLASS STOP	6063-T6	–
14	SIW504	AS REQD.	DOOR JAMB/MULL ADAPTER	6063-T6	–
15	9016E	–	BULB W'STRIPPING	VINYL	CENTRAL PLSTICS
16	U4513	–	Q-LON W'STRIPPING	VINYL	SCHLEGEL
17	5530	AS REQD.	INTERIOR GLAZING GASKET (DUROMETER 70±5)	SANTOPRENE	BY CENTRAL PLASTICS
17A	5531	AS REQD.	EXTERIOR GLAZING GASKET (DUROMETER 70±5)	SANTOPRENE	BY CENTRAL PLASTICS
18	W23201NW0020	AS RQD.	FINSEAL PILE W'STRIPPING	–	ULTRAFAB
20	#8 X 1/2"	–	ASTRAGAL SCREWS PH SMS	–	AT 4" FROM ENDS & 8" O.C.
21	#8 X 1/2"	AS REQD.	GLASS STOP SCREWS SELF DRILLING	–	AT 8" FROM ENDS & 15" O.C. MAX.
22	#12 X 1-1/4"	–	FIX. PANEL SCREWS PH SMS	–	AT 6" FROM ENDS & 17" O.C. MAX.
24	SD44HD	4/LEAF	BUTT HINGES	–	STAINLESS STEEL
25	–	AS REQD.	MULLION REINFORCING	STEEL	–
27	#12 X 2"	1/ CORNER	FRAME AND LEAF ASSEMBLY SCREWS	ST. STEEL	PH SMS
28	#12 X 1/2"	AS REQD.	HINGE ASSEMBLY SCREWS	ST. STEEL	FH MS TYPE F SS
31	SIW 521	–	FLUSH BOLT BLOCK	6063-T6	–
32	#2	–	FLUSH BOLTS	–	SULLIVAN & ASSOC.
33	W5110-STATC6	–	SENTINEL MULTIPOINT LOCK	–	ASHLAND HARDWARE
34	SIW539	–	2" CHAIR RAIL	6063-T6	–
35	–	2/ LITE	SETTING BLOCK	EPDM	DUROMETER 85±5 SHORE A

Approved as complying with the Florida Building Code
Date 05/05/14
NOA# 14-0205.06
Miami Dade Product Control
By

LOCK OPTIONS:

OPTION #1:

SENTINEL MULTIPOINT LOCK BY 'ASHLAND'
WITH THROW BOLT AT 35-1/2" FROM BOTTOM
FLUSH BOLTS CONNECTED TO LOCK
KEY OPERATED ON EXTERIOR AND THUMB TURN ON INTERIOR AND ENGAGING FRAME AT HEAD AND SILL

OPTION #2:

3 POINT LOCK ASSEMBLY (M1805S) BY 'ADAMS RITE'
WITH 4015 THROW BOLT AT 36" FROM BOTTOM
FLUSH BOLTS CONNECTED TO LOCK
KEY OPERATED ON EXTERIOR AND THUMB TURN ON INTERIOR AND ENGAGING FRAME AT HEAD AND SILL

HINGES:

4" X 4" ST. STEEL BUTT HINGES (DSB4NB OR S44HD)
AT 13" FROM TOP AND BOTTOM ENDS AND 21-1/2" O.C. MAX.
HINGE ATTACHED TO DOOR FRAME AND DOOR STILE
USING (4) #12 X 1/2" FH MS
5 HINGES PER LEAF

SEALANTS:

ALL JOINTS AND FRAME CONNECTIONS SEALED WITH SMALL JOINT SEALER.

Engr: JAVAD AHMAD
CIVIL
FLA. PE # 70592
C.A.N. 3538
JUL 31 2014

AL-FAROOQ CORPORATION
ENGINEERS & PRODUCT DEVELOPMENT
1235 S.W. 87 AVE
MIAMI, FLORIDA 33174
TEL (305) 264-8100 FAX. (305) 262-6978

COMP-ANL\W13-62SIW

SERIES 500-10 ALUM OUTSWING ENTRANCE DOOR (L.M.I.)

SIW IMPACT WINDOWS, LLC.
975 S. CONGRESS AVE. #102
DELRAY BEACH, FL. 33445
TEL. (561) 274-9392 FAX. (561) 274-9262

revisions:

no	date	by	description
A	05.21.14		REV. PER RER COMMENTS
B	07.31.14		REV. PER RER COMMENTS

date: 02-05-14
scale: 3/8" = 1"
dr. by: TARIQ
chk. by:

drawing no.
W14-02

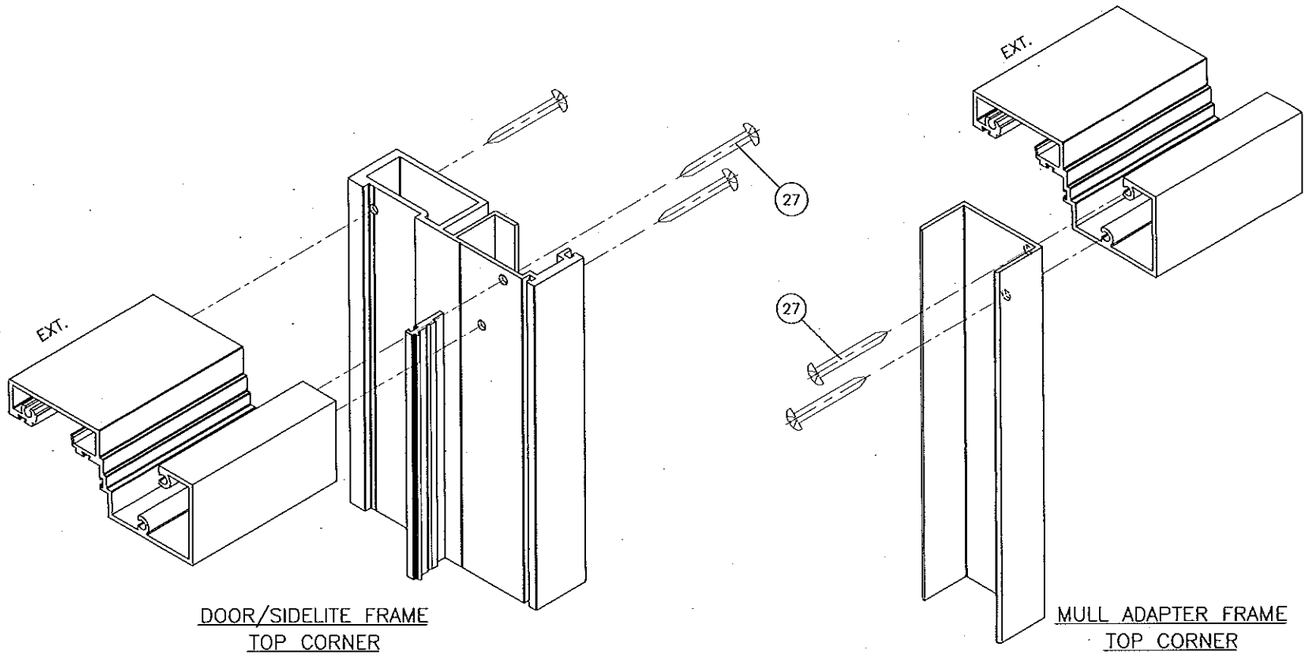

DOOR/SIDELITE FRAME
TOP CORNER

MULL ADAPTER FRAME
TOP CORNER

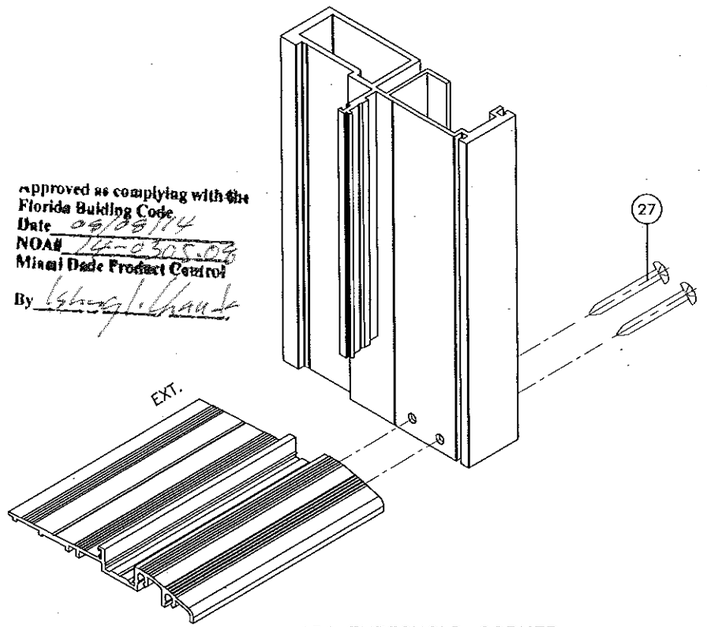

ADA THRESHOLD CORNER

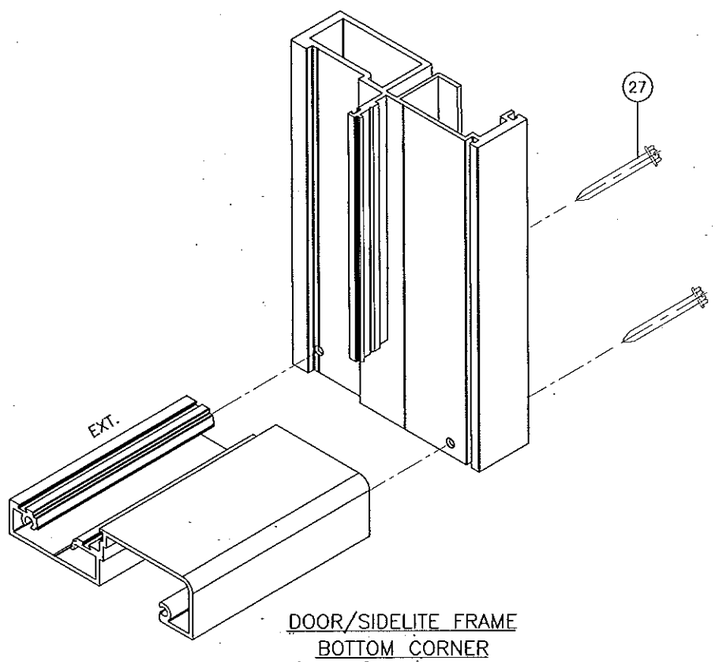

DOOR/SIDELITE FRAME
BOTTOM CORNER

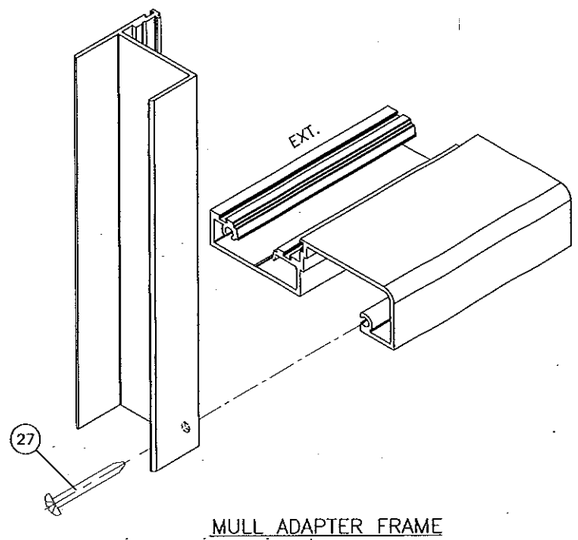

MULL ADAPTER FRAME
BOTTOM CORNER

approved as complying with the
Florida Building Code
Date 05/08/14
NOA# 14-0305.04
Miami Dade Product Control
By

Engr: JAVAD AHMAD
CIVIL
FLA. PE # 70592
C.A.N. 3538
JUL 31 2014

AL-FAROOQ CORPORATION
ENGINEERS & PRODUCT DEVELOPMENT
1235 S.W. 87 AVE
MIAMI, FLORIDA 33174
TEL. (305) 264-8100 FAX. (305) 262-6978
COMP-ANL\W13-62SIW

SERIES 500-10 ALUM OUTSWING ENTRANCE DOOR (L.M.I.)

SIW IMPACT WINDOWS, LLC.
975 S. CONGRESS AVE. #102
DELRAY BEACH, FL. 33445
TEL. (561) 274-9392 FAX. (561) 274-9262

revisions:

no	date	by	description
A	05.21.14		REV. PER RER COMMENTS
B	07.31.14		NO CHANGE THIS SHEET

date: 02-05-14
scale: 3/8" = 1"
dr. by: TARIQ
chk. by:

drawing no.
W14-02

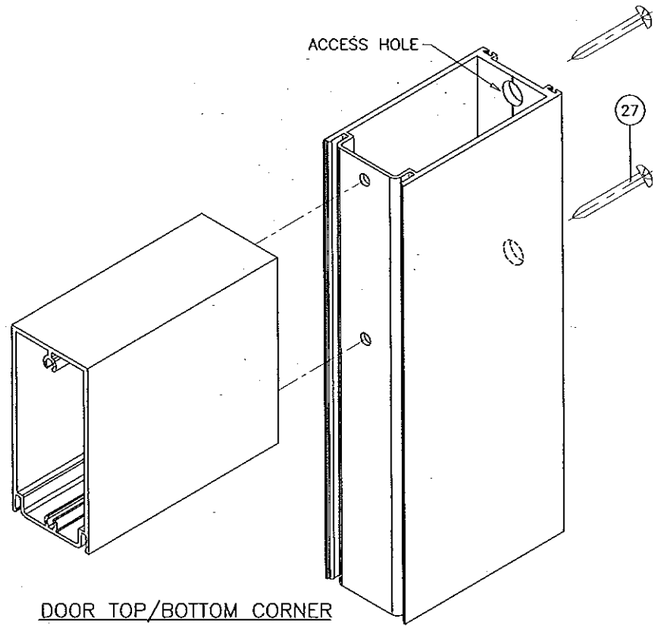

DOOR TOP/BOTTOM CORNER

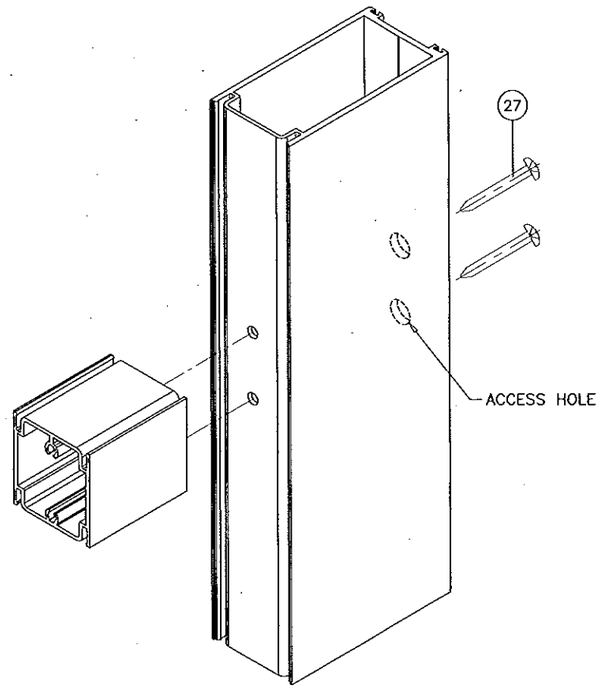

CHAIR RAIL CORNER

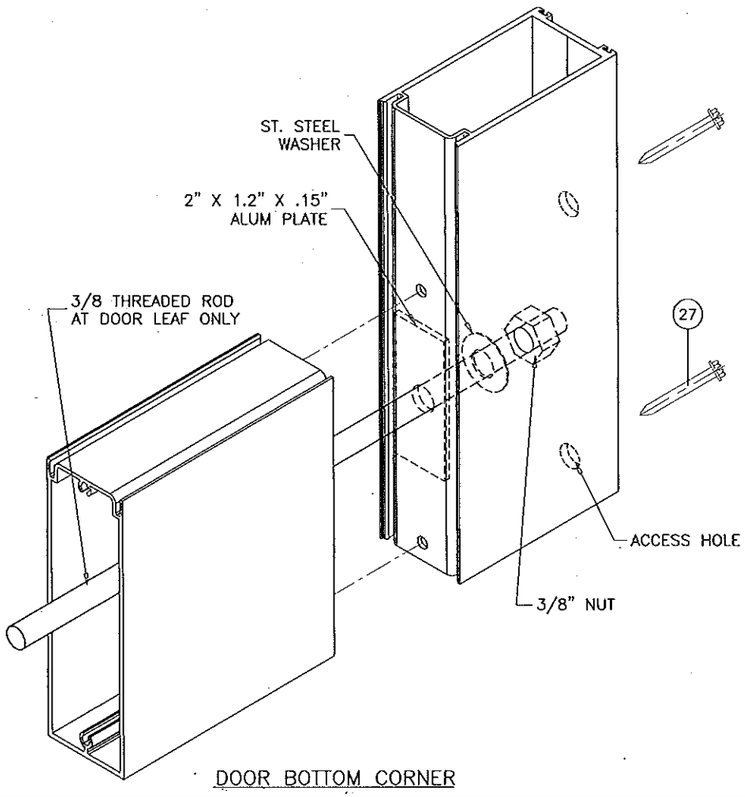

DOOR BOTTOM CORNER

Approved as complying with the Florida Building Code
Date 8/4/2014
NOA# 14-0305.08
Miami-Dade Product Control
By Sheryl L. Glenn

Engr: JAVAD AHMAD
CIVIL
FLA. PE # 70592
C.A.N. 3538
JUL 31 2014

AL-FAROOQ CORPORATION
ENGINEERS & PRODUCT DEVELOPMENT
1235 S.W. 87 AVE
MIAMI, FLORIDA 33174
TEL. (305) 264-8100 FAX. (305) 262-6978
COMP-ANL\W13-62SIW

SERIES 500-10 ALUM OUTSWING ENTRANCE DOOR (L.M.I.)

SIW IMPACT WINDOWS, LLC.
975 S. CONGRESS AVE. #102
DELRAY BEACH, FL. 33445
TEL. (561) 274-9392 FAX. (561) 274-9262

revisions:

no	date	by	description
A	05.21.14		REV. PER RER COMMENTS
B	07.31.14		NO CHANGE THIS SHEET

date: 02-05-14
scale: 3/8" = 1"
dr. by: TARIQ
chk. by:

drawing no.
W14-02

sheet 10 of 10