MIAMI-DADE COUNTY
PRODUCT CONTROL SECTION
11805 SW 26 Street, Room 208
Miami, Florida 33175-2474
T (786) 315-2590 F (786) 315-2599
www.miamidade.gov/economy

DEPARTMENT OF REGULATORY AND ECONOMIC RESOURCES (RER)
BOARD AND CODE ADMINISTRATION DIVISION

NOTICE OF ACCEPTANCE (NOA)

Greenheck Fan Corporation
P.O. Box 410
Schofield, WI 54476

SCOPE:

This NOA is being issued under the applicable rules and regulations governing the use of construction materials. The documentation submitted has been reviewed and accepted by Miami-Dade County RER-Product Control Section to be used in Miami Dade County and other areas where allowed by the Authority Having Jurisdiction (AHJ).

This NOA shall not be valid after the expiration date stated below. The Miami-Dade County Product Control Section (In Miami Dade County) and/or the AHJ (in areas other than Miami Dade County) reserve the right to have this product or material tested for quality assurance purposes. If this product or material fails to perform in the accepted manner, the manufacturer will incur the expense of such testing and the AHJ may immediately revoke, modify, or suspend the use of such product or material within their jurisdiction. RER reserves the right to revoke this acceptance, if it is determined by Miami-Dade County Product Control Section that this product or material fails to meet the requirements of the applicable building code.

This product is approved as described herein, and has been designed to comply with the Florida Building Code, including the High Velocity Hurricane Zone.

DESCRIPTION: Series Vektor-H/HS Steel Rooftop Exhaust Fans

APPROVAL DOCUMENT: Drawing No. **VK-H-1001**, titled "Vektor-H 9-36, Vektor-HS 9-36", sheets 1 through 10 of 10, dated 01/2014, prepared by Greenheck Fan Corporation, signed and sealed by L. David Rice, P.E., bearing the Miami-Dade County Product Control approval stamp with the Notice of Acceptance number and approval date by the Miami-Dade County Product Control Section.

MISSILE IMPACT RATING: Large and Small Missile Impact Resistant

LABELING: Each unit shall bear a permanent label with the manufacturer's name or logo, city, state, model/series, and following statement: "Miami-Dade County Product Control Approved", unless otherwise noted herein.

RENEWAL of this NOA shall be considered after a renewal application has been filed and there has been no change in the applicable building code negatively affecting the performance of this product.

TERMINATION of this NOA will occur after the expiration date or if there has been a revision or change in the materials, use, and/or manufacture of the product or process. Misuse of this NOA as an endorsement of any product, for sales, advertising or any other purposes shall automatically terminate this NOA. Failure to comply with any section of this NOA shall be cause for termination and removal of NOA.

ADVERTISEMENT: The NOA number preceded by the words Miami-Dade County, Florida, and followed by the expiration date may be displayed in advertising literature. If any portion of the NOA is displayed, then it shall be done in its entirety.

INSPECTION: A copy of this entire NOA shall be provided to the user by the manufacturer or its distributors and shall be available for inspection at the job site at the request of the Building Official.

This NOA consists of this page 1 and evidence page E-1, as well as approval document mentioned above.

The submitted documentation was reviewed by **Carlos M. Utrera, P.E.**

MIAMI-DADE COUNTY APPROVED

08/15/2014

NOTICE OF ACCEPTANCE: EVIDENCE SUBMITTED

A. DRAWINGS

1. Drawing No. **VK-H-1001**, titled "Vektor-H 9-36, Vektor-HS 9-36", sheets 1 through 10 of 10, dated 01/2014, prepared by Greenheck Fan Corporation, signed and sealed by L. David Rice, P.E.

B. TESTS

1. Test reports on 1) Uniform Static Air Pressure Test, Loading per FBC TAS 202-94
   2) Large Missile Impact Test per FBC, TAS 201-94
   3) ASTM E72 (Modified)

   along with marked-up drawings and installation diagram of Series/Model Vektor-H/HS Laboratory Exhaust Systems, prepared by Architectural Testing, Inc., Test Report No. **C7244.01-602-18**, dated 02/14/2014, signed and sealed by Shawn G. Collins, P.E.

C. CALCULATIONS

1. Anchor verification calculations prepared by Rice Engineering, dated 02/26/2014, signed and sealed by L. David Rice, P.E.

D. QUALITY ASSURANCE

1. Miami-Dade Department of Regulatory and Economic Resources (RER)

E. MATERIAL CERTIFICATIONS

1. None.

F. STATEMENTS

1. Statement letter of code conformance to 2010 FBC issued by Rice Engineering, dated 02/25/2014, signed and sealed by L. David Rice, P.E.
2. Statement letter of no financial interest issued by Rice Engineering, dated 02/25/2014, signed and sealed by L. David Rice, P.E.
3. Laboratory compliance letter issued by Architectural Testing, Inc., for Test Reports No. **C7244.01-602-18**, dated 02/14/2014, signed and sealed by Shawn G. Collins, P.E.

08/15/2014

Carlos M. Utrera, P.E.
Product Control Examiner
NOA No. 14-0325.05
Expiration Date: August 28, 2019
Approval Date: August 28, 2014

DESIGN LIMITS	
Max. Design Load:	±140 psf (6.7 Kpa)
Max Overal Enclosure:	67.63 x 107.25 in. (1718 x2724 mm)
Max. Overall Unit Height:	167 in. (4242 mm)

UNIT	FASTENER F DESCRIPTION	QTY.	FASTENER G DESCRIPTION	QTY.	FASTENER H DESCRIPTION	QTY.	FASTENER J DESCRIPTION	QTY.	FASTENER K DESCRIPTION	QTY.
VEKTOR-H 9	SCR,CS,HH,.313-18X1,SS,316, W/EPDM,WSHR WSHR,FLAT,.045X.35X.745,SS,316 NUT,HEX,.313-18,SS,316	16	SCR,CS,HH,.313-18X1,SS,316, W/EPDM,WSHR	16	SCR,CS,HH,.313-18X1,SS,316, W/EPDM,WSHR	6	SCR,TEK,HWH,#12-14X.875,SS,410	52	SCR,TCS,IHWH,.313-18X1,TYP-23,MECH ZP	12
VEKTOR-H 10										
VEKTOR-H 12										
VEKTOR-H 13					NUT,HEX,.375-16,SS,316 WSHR,FLAT,.05X.406X.875,SS,316 WSHR,FLAT,.05X.406X.875,SS,316	6				
VEKTOR-H 16						8		70		16
VEKTOR-H 18				20						20
VEKTOR-H 22										
VEKTOR-H 24		8				10		72		24
VEKTOR-H 30		16				12		78		28
VEKTOR-H 36										

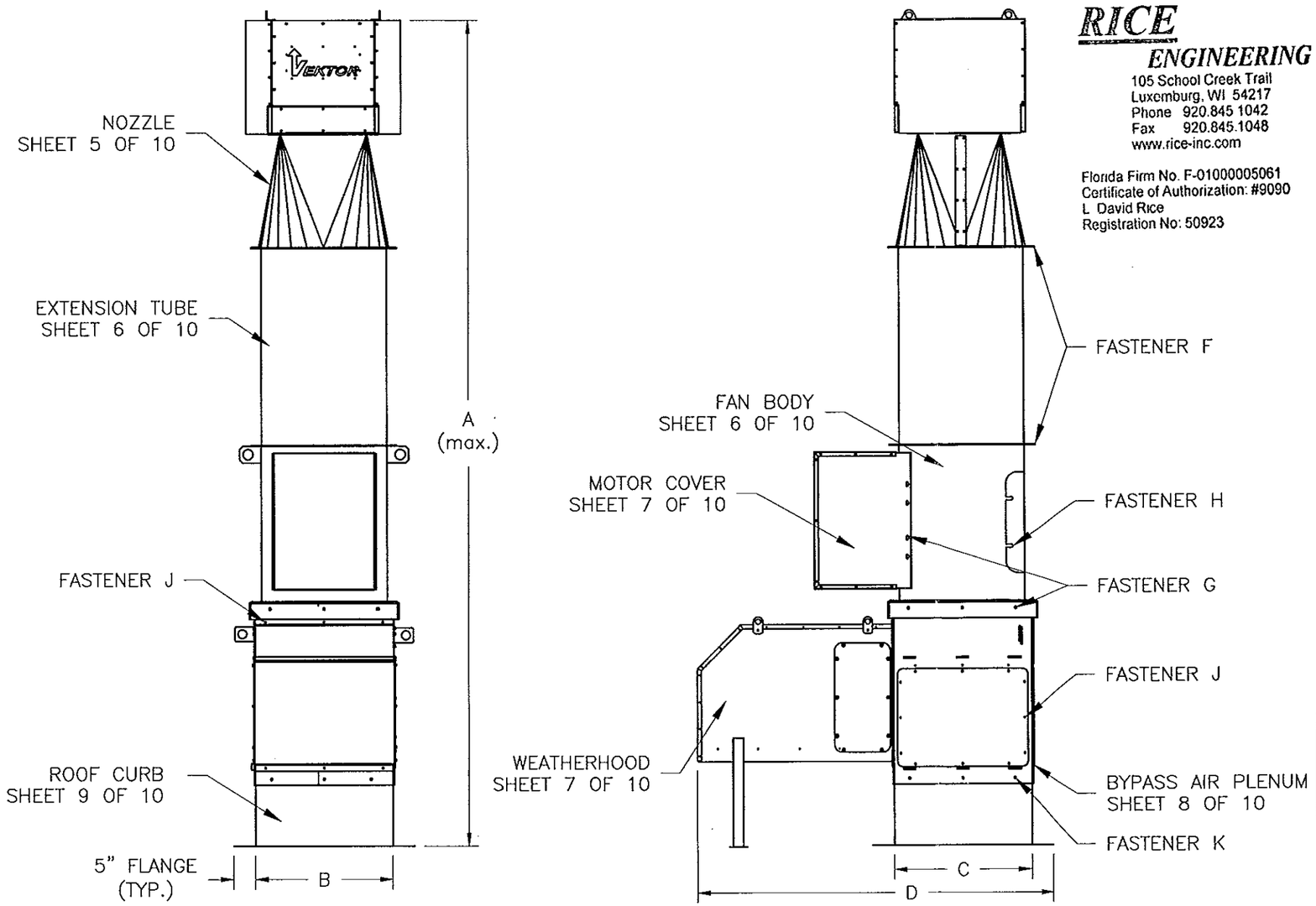

RICE ENGINEERING
105 School Creek Trail
Luxemburg, WI 54217
Phone 920.845 1042
Fax 920.845.1048
www.rice-inc.com

Florida Firm No. F-01000005061
Certificate of Authorization: #9090
L David Rice
Registration No: 50923

ALL DIMENSIONS ARE IN INCHES
WEIGHTS DO NOT INCLUDE MOTOR AND DRIVES

UNIT	A (max.)	B	C	D	WEIGHT (LBS.)
VEKTOR-H 9	146.00	21.63	21.63	72.50	608
VEKTOR-H 10	146.00	21.63	21.63	72.50	608
VEKTOR-H 12	146.00	21.63	21.63	72.50	618
VEKTOR-H 13	146.50	23.63	23.63	71.50	671
VEKTOR-H 16	146.50	27.63	27.63	76.50	813
VEKTOR-H 18	146.00	33.63	33.63	82.50	981
VEKTOR-H 22	145.25	39.63	39.63	88.50	1241
VEKTOR-H 24	146.00	45.63	45.63	94.75	1520
VEKTOR-H 30	155.50	51.63	51.63	100.50	1870
VEKTOR-H 36	167.00	57.63	57.63	107.25	2323

NOTES:
1. MODELS VEKTOR-H & VEKTOR-HS HAS BEEN SUCCESSFULLY TESTED IN ACCORDANCE WITH MIAMI DADE TEST PROTOCOL TAS-201 (LARGE MISSILE IMPACT), AND TAS-202 (STATIC LOADING).
2. ROOF STRUCTURE MUST BE DESIGNED TO WITHSTAND THE WEIGHT AND LOADING TRANSMITTED BY LABORATORY EXHAUST FAN. FASTENERS SHALL BE SPECIFIED AND INSTALLED AS DETAILED.
3. DESIGN, TESTING, AND INSTALLATION CONFORMS TO FLORIDA BUILDING CODE.
4. DESIGN PRESSURE = +/- 140 PSF LARGE MISSILE IMPACT RESISTANT.
5. TESTED FOR AREAS INCLUDING HIGH VELOCITY HURRICANE ZONES.
6. THESE FANS HAVE NOT BEEN TESTED FOR WIND DRIVEN RAIN TEST PER FLORIDA BUILDING CODE, TAS-100 (A)-95.
7. THIS APPROVAL IS FOR THE STRUCTURAL CAPACITY AND IMPACT RATING OF THE EXTERIOR HOUSNG ONLY, IT DOES NOT INCLUDE ANY INTERIOR MECHANISM OR ELECTRICAL PART.

Approved as complying with the Florida Building Code
Date 06/28/2014
NOA# 14-0325.05
Miami Dade Product Control
By

L. DAVID RICE
LICENSE
No. 50923
STATE OF FLORIDA
PROFESSIONAL ENGINEER

JUN 0 3 2014

GREENHECK
P.O.BOX 410 SCHOFIELD, WISCONSIN 54476-0410

TITLE
VEKTOR-H 9-36
VEKTOR-HS 9-36
1X1 ASSEMBLY
SHEET 1 OF 10

DRAWN BY	WOTRUBA
DATE	01/2014
SUPERSEDES	
SCALE	
ECO	
ENG. REF.	NOA TESTING
CAD DRAWING NO.	VK-H-1001
	B

DESIGN LIMITS	
Max. Design Load:	±140 psf (6.7 Kpa)
Max Overal Enclosure:	130.50 x 107.25 in. (3315 x 2724 mm)
Max. Overall Unit Height:	167 in. (4242 mm)

UNIT	FASTENER F DESCRIPTION	QTY.	FASTENER G DESCRIPTION	QTY.	FASTENER H DESCRIPTION	QTY.	FASTENER J DESCRIPTION	QTY.	FASTENER K DESCRIPTION	QTY.
VEKTOR-H 9	SCR,CS,HH,.313-18X1,SS,316, W/EPDM,WSHR WSHR,FLAT,.045X.35X.745,SS,316 NUT,HEX,.313-18,SS,316	32	SCR,CS,HH,.313-18X1,SS,316, W/EPDM,WSHR	32	SCR,CS,HH,.313-18X1,SS,316, W/EPDM,WSHR	12	SCR,TEK,HWH,#12-14X.875,SS,410	80	SCR,TCS,IHWH,.313-18X1,TYP-23,MECH ZP	18
VEKTOR-H 10										
VEKTOR-H 12										
VEKTOR-H 13					NUT,HEX,.375-16,SS,316 WSHR,FLAT,.05X.406X.875,SS,316 WSHR,FLAT,.05X.406X.875,SS,316	12				20
VEKTOR-H 16						16		108		24
VEKTOR-H 18				40						26
VEKTOR-H 22						20		112		32
VEKTOR-H 24		16				24				36
VEKTOR-H 30		32						120		38
VEKTOR-H 36										44

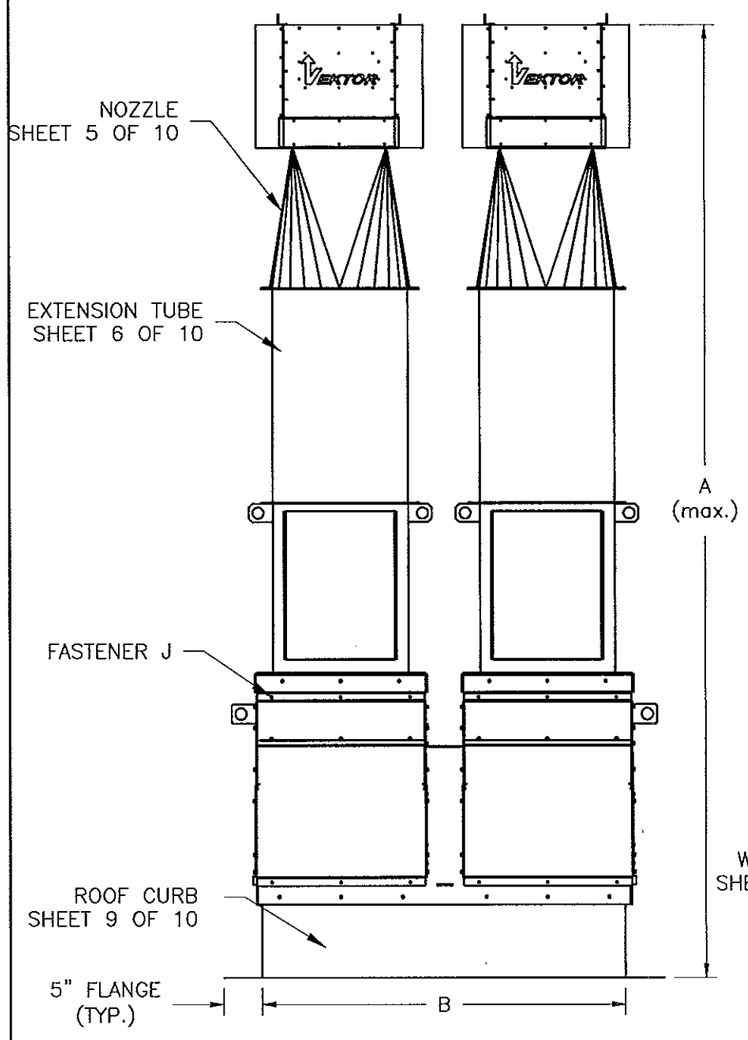

RICE ENGINEERING
105 School Creek Trail
Luxemburg, WI 54217
Phone 920.845.1042
Fax 920.845.1048
www.rice-inc.com

Florida Firm No F-01000005061
Certificate of Authorization: #9090
L David Rice
Registration No: 50923

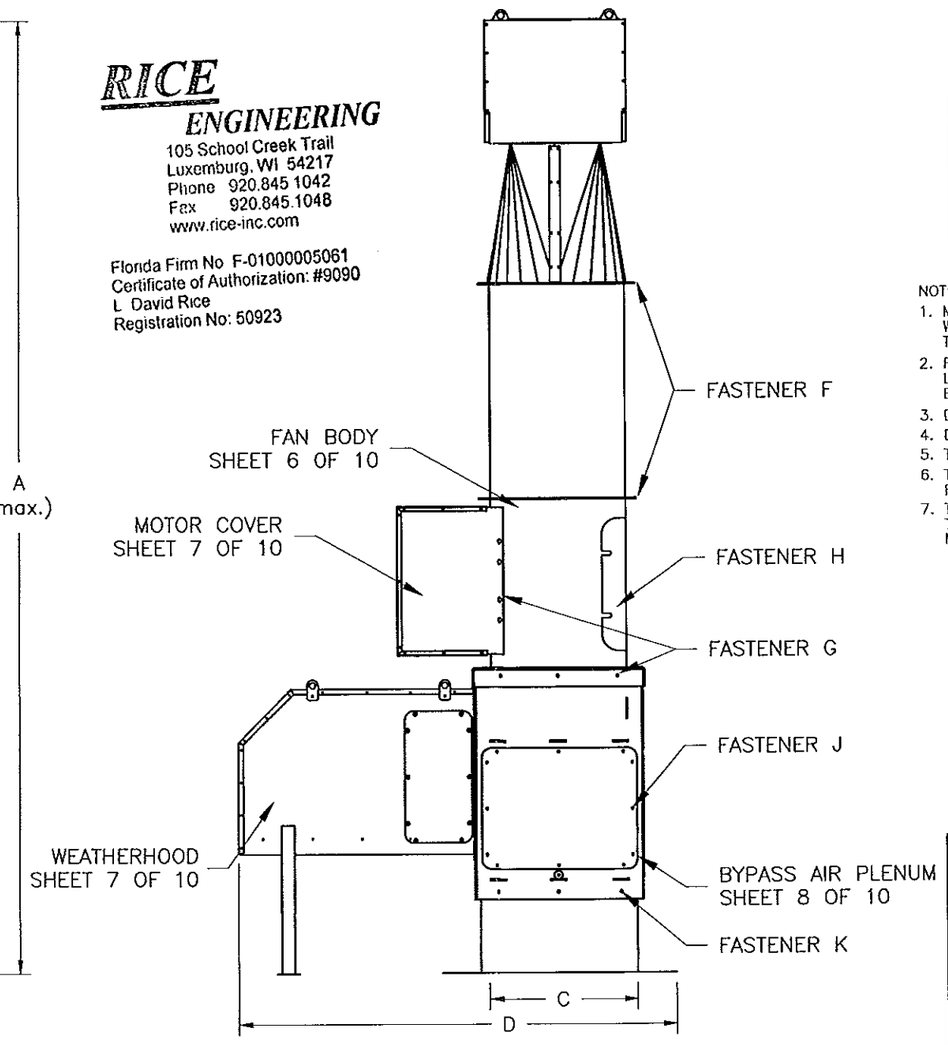

ALL DIMENSIONS ARE IN INCHES
WEIGHTS DO NOT INCLUDE MOTORS AND DRIVES

UNIT	A (max.)	B	C	D	WEIGHT (LBS.)
VEKTOR-H 9	146.00	48.50	21.63	72.50	1137
VEKTOR-H 10	146.00	48.50	21.63	72.50	1137
VEKTOR-H 12	146.00	48.50	21.63	72.50	1157
VEKTOR-H 13	146.50	52.50	23.63	71.50	1274
VEKTOR-H 16	146.50	60.50	27.63	76.50	1549
VEKTOR-H 18	146.00	72.50	33.63	82.50	1863
VEKTOR-H 22	145.25	84.50	39.63	88.50	2371
VEKTOR-H 24	146.00	96.50	45.63	94.75	2917
VEKTOR-H 30	155.50	108.50	51.63	100.50	3586
VEKTOR-H 36	167.00	120.50	57.63	107.25	4439

NOTES:

1. MODEL VEKTOR-H HAS BEEN SUCCESSFULLY TESTED IN ACCORDANCE WITH MIAMI DADE TEST PROTOCOL TAS-201 (LARGE MISSILE IMPACT), AND TAS-202 (STATIC LOADING).
2. ROOF STRUCTURE MUST BE DESIGNED TO WITHSTAND THE WEIGHT AND LOADING TRANSMITTED BY LABORATORY EXHAUST FAN. FASTENERS SHALL BE SPECIFIED AND INSTALLED AS DETAILED.
3. DESIGN, TESTING, AND INSTALLATION CONFORMS TO FLORIDA BUILDING CODE.
4. DESIGN PRESSURE = +/- 140 PSF LARGE MISSILE IMPACT RESISTANT.
5. TESTED FOR AREAS INCLUDING HIGH VELOCITY HURRICANE ZONES.
6. THESE FANS HAVE NOT BEEN TESTED FOR WIND DRIVEN RAIN TEST PER FLORIDA BUILDING CODE, TAS-100 (A)-95.
7. THIS APPROVAL IS FOR THE STRUCTURAL CAPACITY AND IMPACT RATING OF THE EXTERIOR HOUSNG ONLY, IT DOES NOT INCLUDE ANY INTERIOR MECHANISM OR ELECTRICAL PART.

Approved as complying with the Florida Building Code
Date 08/28/2014
NOA# 14-0325.05
Miami Dade Product Control
By

L. DAVID RICE
LICENSE
No. 50923
STATE OF FLORIDA
PROFESSIONAL ENGINEER

JUN 0 3 2014

GREENHECK
P.O.BOX 410 SCHOFIELD, WISCONSIN 54476-0410

TITLE
VEKTOR-H 9-36
VEKTOR-HS 9-36
2X1 ASSEMBLY
SHEET 2 OF 10

DRAWN BY	WOTRUBA
DATE	01/2014
SUPERSEDES	
SCALE	1/20
CAD DRAWING NO.	VK-H-1001
ECO	
ENG. REF.	NOA TESTING
	B

DESIGN LIMITS	
Max. Design Load:	±140 psf (6.7 Kpa)
Max Overal Enclosure:	183.38 x 107.25 in. (4658 x 2724 mm)
Max. Overall Unit Height:	167 in. (4242 mm)

Fu_1 = Horizontal parallel ultimate force per each Vektor-H9
Fu_2 = Horizontal parallel ultimate force per each Vektor-H36
Fu_3 = Horizontal perpendicular ultimate force per each Vektor-H9
Fu_4 = Horizontal perpendicular ultimate force per each Vektor-H36

Fu_1 = 2,385 lbf
Fu_2 = 7,108 lbf
Fu_3 = 1,925 lbf
Fu_4 = 6,169 lbf

UNIT	FASTENER F DESCRIPTION	QTY.	FASTENER G DESCRIPTION	QTY.	FASTENER H DESCRIPTION	QTY.	FASTENER J DESCRIPTION	QTY.	FASTENER K DESCRIPTION	QTY.
VEKTOR-H 9	SCR,CS,HH,.313-18X1,SS,316, W/EPDM,WSHR WSHR,FLAT,.045X.35X.745,SS,316 NUT,HEX,.313-18,SS,316	48	SCR,CS,HH,.313-18X1,SS,316, W/EPDM,WSHR	48	SCR,CS,HH,.313-18X1,SS,316, W/EPDM,WSHR	18	SCR,TEK,HWH,#12-14X.875,SS,410	102	SCR,TCS,HWH,.313-18X1,TYP-23,MECH ZP	26
VEKTOR-H 10										
VEKTOR-H 12										
VEKTOR-H 13					NUT,HEX,.375-16,SS,316 WSHR,FLAT,.05X.406X.875,SS,316 WSHR,FLAT,.05X.406X.875,SS,316	18				
VEKTOR-H 16						24		138		32
VEKTOR-H 18				60						36
VEKTOR-H 22										42
VEKTOR-H 24		24				30		142		48
VEKTOR-H 30		48				36				54
VEKTOR-H 36								152		58

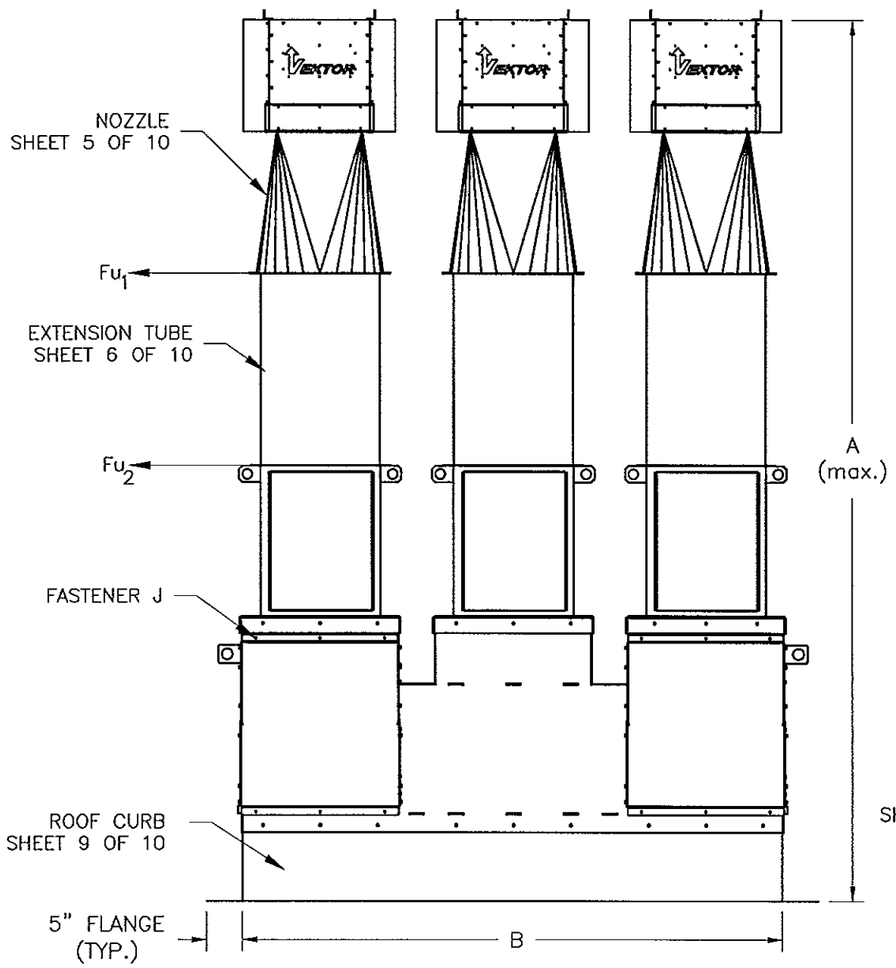

RICE ENGINEERING
105 School Creek Trail
Luxemburg, WI 54217
Phone 920.845 1042
Fax 920.845 1048
www.rice-inc.com

Florida Firm No: F-01000005061
Certificate of Authorization: #9090
L David Rice
Registration No: 50923

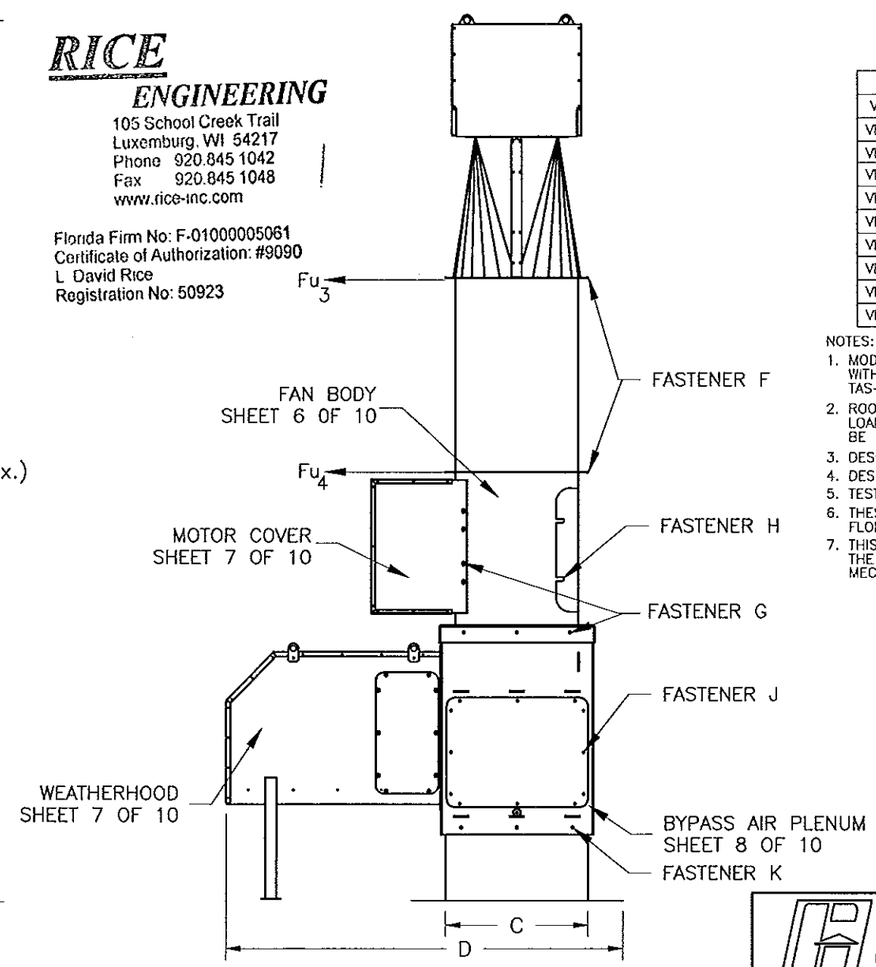

ALL DIMENSIONS ARE IN INCHES
WEIGHTS DO NOT INCLUDE MOTORS AND DRIVES

UNIT	A (max.)	B	C	D	WEIGHT (LBS.)
VEKTOR-H 9	146.00	75.38	21.63	72.50	1591
VEKTOR-H 10	146.00	75.38	21.63	72.50	1591
VEKTOR-H 12	146.00	75.38	21.63	72.50	1621
VEKTOR-H 13	146.50	81.38	23.63	71.50	1781
VEKTOR-H 16	146.50	93.38	27.63	76.50	2161
VEKTOR-H 18	146.00	111.38	33.63	82.50	2638
VEKTOR-H 22	145.25	129.38	39.63	88.50	3316
VEKTOR-H 24	146.00	147.38	45.63	94.75	4085
VEKTOR-H 30	155.50	165.38	51.63	100.50	5026
VEKTOR-H 36	167.00	183.38	57.63	107.25	6230

NOTES:
1. MODEL VEKTOR-H HAS BEEN SUCCESSFULLY TESTED IN ACCORDANCE WITH MIAMI DADE TEST PROTOCOL TAS-201 (LARGE MISSILE IMPACT), AND TAS-202 (STATIC LOADING).
2. ROOF STRUCTURE MUST BE DESIGNED TO WITHSTAND THE WEIGHT AND LOADING TRANSMITTED BY LABORATORY EXHAUST FAN. FASTENERS SHALL BE SPECIFIED AND INSTALLED AS DETAILED.
3. DESIGN, TESTING, AND INSTALLATION CONFORMS TO FLORIDA BUILDING CODE.
4. DESIGN PRESSURE = +/- 140 PSF LARGE MISSILE IMPACT RESISTANT.
5. TESTED FOR AREAS INCLUDING HIGH VELOCITY HURRICANE ZONES.
6. THESE FANS HAVE NOT BEEN TESTED FOR WIND DRIVEN RAIN TEST PER FLORIDA BUILDING CODE, TAS-100 (A)-95.
7. THIS APPROVAL IS FOR THE STRUCTURAL CAPACITY AND IMPACT RATING OF THE EXTERIOR HOUSNG ONLY, IT DOES NOT INCLUDE ANY INTERIOR MECHANISM OR ELECTRICAL PART.

Approved as complying with the Florida Building Code
Date 08/28/2014
NOA# 14-0325.05
Miami Dade Product Control
By

L. DAVID RICE
LICENSE
No. 50923
STATE OF FLORIDA
PROFESSIONAL ENGINEER

JUN 0 3 2014

GREENHECK
P.O.BOX 410 SCHOFIELD, WISCONSIN 54476-0410

DRAWN BY: WOTRUBA	ECO
DATE: 01/2014	ENG. REF.: NOA TESTING
SUPERSEDES	
SCALE	
CAD DRAWING NO.: VK-H-1001	B

TITLE
VEKTOR-H 9-36
VEKTOR-HS 9-36
3X1 ASSEMBLY
SHEET 3 OF 10

DESIGN LIMITS	
Max. Design Load:	±140 psf (6.7 Kpa)
Max Overal Enclosure:	67.63 x 75.50 in. (1718 x 1918 mm)
Max. Overall Unit Height:	167 in. (4242 mm)

UNIT	FASTENER F DESCRIPTION	QTY.	FASTENER G DESCRIPTION	QTY.	FASTENER H DESCRIPTION	QTY.	FASTENER K DESCRIPTION	QTY.
VEKTOR-H 9	SCR,CS,HH,.313-18X1,SS,316, W/EPDM,WSHR WSHR,FLAT,.045X.35X.745,SS,316 NUT,HEX,.313-18,SS,316	16	SCR,CS,HH,.313-18X1,SS,316, W/EPDM,WSHR	4	SCR,CS,HH,.313-18X1,SS,316, W/EPDM,WSHR	6	SCR,TCS,IHWH,.313-18X1,TYP-23,MECH ZP	12
VEKTOR-H 10								
VEKTOR-H 12								
VEKTOR-H 13					NUT,HEX,.375-16,SS,316 WSHR,FLAT,.05X.406X.875,SS,316 WSHR,FLAT,.05X.406X.875,SS,316	6		
VEKTOR-H 16						8		16
VEKTOR-H 18								20
VEKTOR-H 22						10		24
VEKTOR-H 24								
VEKTOR-H 30		32				12		28
VEKTOR-H 36								

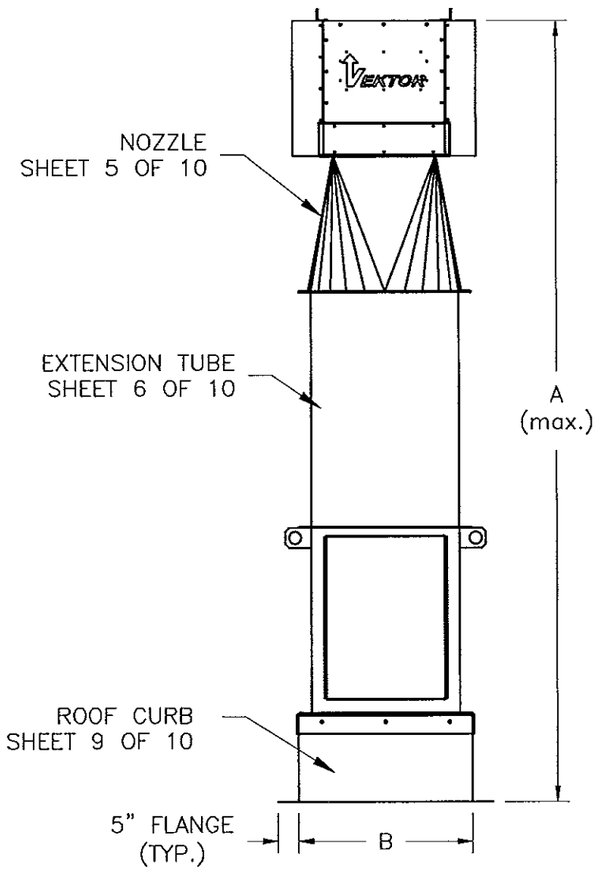

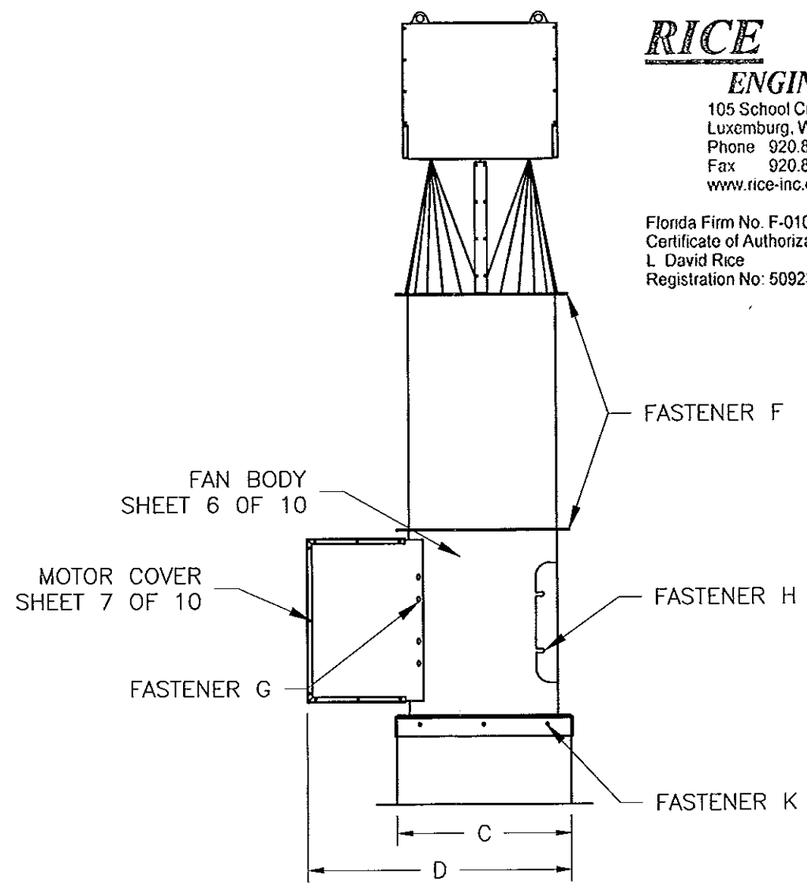

RICE ENGINEERING
105 School Creek Trail
Luxemburg, WI 54217
Phone 920.845 1042
Fax 920.845 1048
www.rice-inc.com

Florida Firm No. F-01000005061
Certificate of Authorization: #9090
L David Rice
Registration No: 50923

ALL DIMENSIONS ARE IN INCHES
WEIGHTS DO NOT INCLUDE MOTOR AND DRIVES

UNIT	A (max.)	B	C	D	WEIGHT (LBS.)
VEKTOR-H 9	146.00	21.63	21.63	33.75	407
VEKTOR-H 10	146.00	21.63	21.63	33.75	407
VEKTOR-H 12	146.00	21.63	21.63	33.75	417
VEKTOR-H 13	146.50	23.63	23.63	36.75	451
VEKTOR-H 16	146.50	27.63	27.63	40.00	559
VEKTOR-H 18	146.00	33.63	33.63	48.25	665
VEKTOR-H 22	145.25	39.63	39.63	53.75	829
VEKTOR-H 24	146.00	45.63	45.63	59.75	1009
VEKTOR-H 30	155.50	51.63	51.63	68.25	1259
VEKTOR-H 36	167.00	57.63	57.63	75.50	1537

NOTES:
1. MODELS VEKTOR-H & VEKTOR-HS HAS BEEN SUCCESSFULLY TESTED IN ACCORDANCE WITH MIAMI DADE TEST PROTOCOL TAS-201 (LARGE MISSILE IMPACT), AND TAS-202 (STATIC LOADING).
2. ROOF STRUCTURE MUST BE DESIGNED TO WITHSTAND THE WEIGHT AND LOADING TRANSMITTED BY LABORATORY EXHAUST FAN. FASTENERS SHALL BE SPECIFIED AND INSTALLED AS DETAILED.
3. DESIGN, TESTING, AND INSTALLATION CONFORMS TO FLORIDA BUILDING CODE.
4. DESIGN PRESSURE = +/- 140 PSF LARGE MISSILE IMPACT RESISTANT.
5. TESTED FOR AREAS INCLUDING HIGH VELOCITY HURRICANE ZONES.
6. THESE FANS HAVE NOT BEEN TESTED FOR WIND DRIVEN RAIN TEST PER FLORIDA BUILDING CODE, TAS-100 (A)-95.
7. THIS APPROVAL IS FOR THE STRUCTURAL CAPACITY AND IMPACT RATING OF THE EXTERIOR HOUSNG ONLY, IT DOES NOT INCLUDE ANY INTERIOR MECHANISM OR ELECTRICAL PART.

Approved as complying with the Florida Building Code
Date 08/28/2014
NOA# 14-0325.05
Miami Dade Product Control
By
JUN 0 3 2014

L. DAVID RICE
LICENSE
No. 50923
STATE OF FLORIDA
PROFESSIONAL ENGINEER

GREENHECK
P.O.BOX 410 SCHOFIELD, WISCONSIN 54476-0410

DRAWN BY	WOTRUBA
DATE	01/2014
SUPERSEDES	
SCALE	
ENG. REF.	NOA TESTING
CAD DRAWING NO.	VK-H-1001
	B

TITLE
VEKTOR-H 9-36
VEKTOR-HS 9-36
1X1 ASSEMBLY (NO PLENUM)
SHEET 4 OF 10

ALL DIMENSIONS ARE IN INCHES.
FASTENER F=SCR,CS,HH,.313–18X1,SS,316, W/EPDM,WSHR
WSHR,FLAT,.045X.35X.745,SS,316
NUT,HEX,.313–18,SS,316
FASTENER J=SCR,TEK,HWH,#12–14X.875,SS,410
FASTENER L= RVT,BLIND,DOME,.187,.126–.25,SS

HRS POCS=HOT ROLLED STEEL, PICKLED AND OILED COMMERCIAL STEEL
CRS DS=COLD ROLLED STEEL, DRAWING STEEL
HRS POCS & CRS DS MATERIALS ARE COVERED WITH AN ELECTROSTATIC POWDER COATING

UNIT SIZE	A	B	C	MATERIAL CONE	MATERIAL FLANGE
VEKTOR–H 9	43.00	18.38	21.63	16 GA. CRS DS	10 GA HRS POCS
VEKTOR–H 10	43.00	18.38	21.63		
VEKTOR–H 12	43.00	18.38	21.63		
VEKTOR–H 13	43.00	20.38	23.63		
VEKTOR–H 16	43.00	24.38	27.63		
VEKTOR–H 18	43.00	30.38	33.63		
VEKTOR–H 22	43.00	36.38	39.63		
VEKTOR–H 24	43.00	42.50	45.75		
VEKTOR–H 30	43.00	48.50	52.75		
VEKTOR–H 36	43.00	55.00	59.25		

UNIT SIZE	A	B	C	QTY. W	MATERIAL WRAP	MATERIAL STIFFENER	MATERIAL FLANGE
VEKTOR–H 9	43.00	18.38	21.63	40	18 GA. CRS DS	18 GA. CRS DS	10 GA HRS POCS
VEKTOR–H 10	43.00	18.38	21.63	40			
VEKTOR–H 12	43.00	18.38	21.63	40			
VEKTOR–H 13	43.00	20.38	23.63	40			
VEKTOR–H 16	43.00	24.38	27.63	44			
VEKTOR–H 18	43.00	30.38	33.63	44			
VEKTOR–H 22	43.00	36.38	39.63	52			
VEKTOR–H 24	43.00	42.50	45.75	52			
VEKTOR–H 30	43.00	48.50	52.75	58			
VEKTOR–H 36	43.00	55.00	49.25	58			

UNIT SIZE	A	B	C	D	E	QTY. X	QTY. Y	QTY. Z	MATERIAL EXTR PNL	MATERIAL TRANSN PNL	MATERIAL SD CVR	MATERIAL FLG's
VEKTOR–H 9	43.00	21.50	18.38	21.63	25.04	22	42	16	16 GA. CRS DS	14 GA. CRS DS	16 GA. CRS DS	10 GA HRS POCS
VEKTOR–H 10	43.00	21.50	18.38	21.63	25.04	22	42	16				
VEKTOR–H 12	43.00	21.50	18.38	21.63	25.04	22	42	16				
VEKTOR–H 13	43.00	21.50	20.38	23.63	25.04	22	42	16				
VEKTOR–H 16	43.00	21.50	24.38	27.63	29.57	26	44	16				
VEKTOR–H 18	43.00	21.50	30.38	33.63	33.33	26	44	16				
VEKTOR–H 22	43.00	21.50	36.38	39.63	37.64	26	46	16				
VEKTOR–H 24	43.00	21.50	42.50	45.75	44.03	30	46	32				
VEKTOR–H 30	43.00	21.50	48.50	52.75	47.48	30	50	32			14 GA. CRS DS	
VEKTOR–H 36	43.00	21.50	55.00	59.25	58.43	30	54	32				

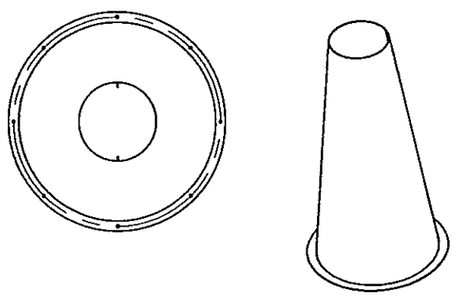

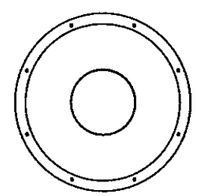

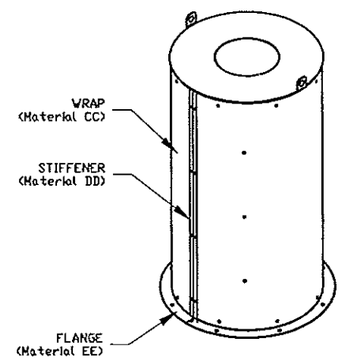

RICE
ENGINEERING
105 School Creek Trail
Luxemburg, WI 54217
Phone 920.845 1042
Fax 920.845 1048
www.rice-inc.com

Florida Firm No. F-01000005061
Certificate of Authorization: #9090
L David Rice
Registration No: 50923

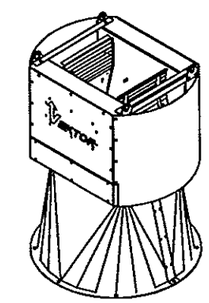

L. DAVID RICE
LICENSE
No. 50923
STATE OF FLORIDA
PROFESSIONAL ENGINEER

JUN 0 3 2014

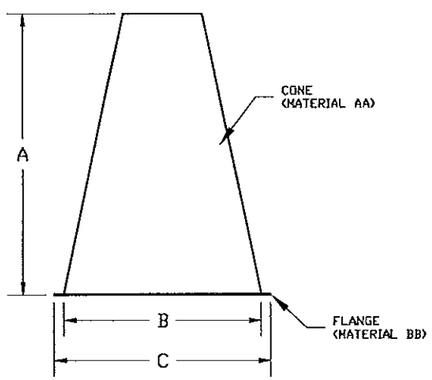

VEKTOR–H NOZZLE

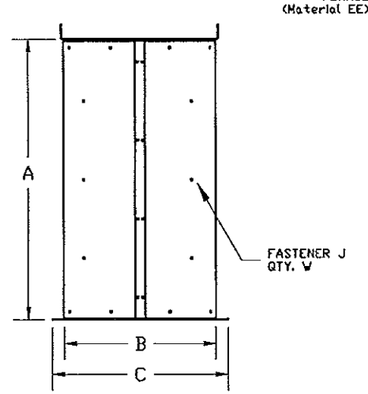

VEKTOR–H ATTENUATING NOZZLE

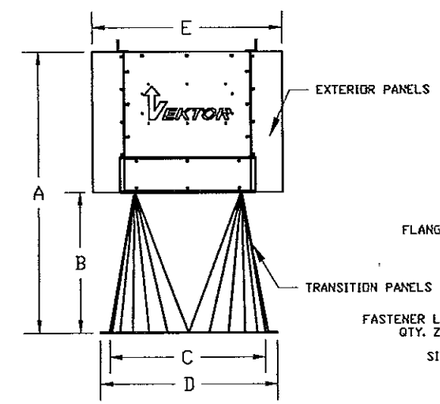

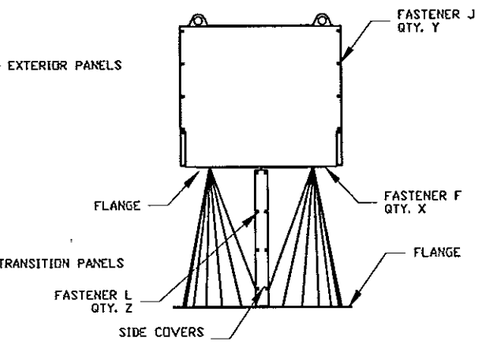

VEKTOR–HS "SAWE" NOZZLE

Approved as complying with the
Florida Building Code
Date 08/28/2014
NOA# 14-0325.05
Miami Dade Product Control
By

GREENHECK
P.O.BOX 410 SCHOFIELD, WISCONSIN 54476-0410

DRAWN BY	WOTRUBA
DATE	01/2014
SUPERSEDES	
SCALE	
ECO	
ENG REF.	NOA TESTING
TITLE	VEKTOR–H 9–36 VEKTOR–HS 9–36 NOZZLES SHEET 5 OF 10
CAD DRAWING NO.	VK–H–1001
	B

ALL DIMENSIONS ARE IN INCHES.
HRS POCS=HOT ROLLED STEEL, PICKLED AND OILED COMMERCIAL STEEL
CRS DS=COLD ROLLED STEEL, DRAWING STEEL
HRS POCS & CRS DS MATERIALS ARE COVERED WITH AN ELECTROSTATIC POWDER COATING

UNIT SIZE	A	B	C	D	MATERIAL		
					OUTR TUBE	CURB PNL	ACS PNL
VEKTOR–H 9	25.50	18.65	21.65	22.00	12 GA. HRS POCS	12 GA. HRS POCS	12 GA. HRS POCS
VEKTOR–H 10	25.50	18.65	21.65	22.00			
VEKTOR–H 12	25.50	18.65	21.65	22.00			
VEKTOR–H 13	27.00	20.58	23.58	24.00			
VEKTOR–H 16	31.00	24.58	27.58	28.00			
VEKTOR–H 18	33.50	30.58	33.58	34.00			
VEKTOR–H 22	37.75	36.58	39.58	40.00	10 GA. HRS POCS		10 GA. HRS POCS
VEKTOR–H 24	42.00	42.79	45.79	46.00			
VEKTOR–H 30	51.00	48.77	52.77	52.00			
VEKTOR–H 36	56.50	55.27	59.27	58.00			

RICE ENGINEERING
105 School Creek Trail
Luxemburg, WI 54217
Phone: 920.845 1042
Fax: 920.845.1048
www.rice-inc.com

Florida Firm No: F-01000005061
Certificate of Authorization: #9090
L David Rice
Registration No: 50923

A_1 =DIMENSION IN RELATION TO SHEETS 1,2, & 3 OF 10
A_2 =DIMENSION IN RELATION TO SHEET 4 OF 10

UNIT SIZE	A_1	A_2	B	C	MATERIAL
					EXTENSION
VEKTOR–H 9	29.00	55.50	18.65	21.65	12 GA. HRS POCS
VEKTOR–H 10	29.00	55.50	18.65	21.65	
VEKTOR–H 12	29.00	55.50	18.65	21.65	
VEKTOR–H 13	27.00	55.00	20.58	23.58	
VEKTOR–H 16	21.00	51.00	24.58	27.58	
VEKTOR–H 18	17.00	48.00	30.58	33.58	
VEKTOR–H 22	9.00	43.00	36.58	39.58	
VEKTOR–H 24	N/A	37.00	42.77	45.77	
VEKTOR–H 30	N/A	40.00	48.77	52.77	
VEKTOR–H 36	N/A	46.00	55.27	59.27	

L. DAVID RICE
LICENSE
No. 50923
STATE OF FLORIDA
PROFESSIONAL ENGINEER

JUN 0 3 2014

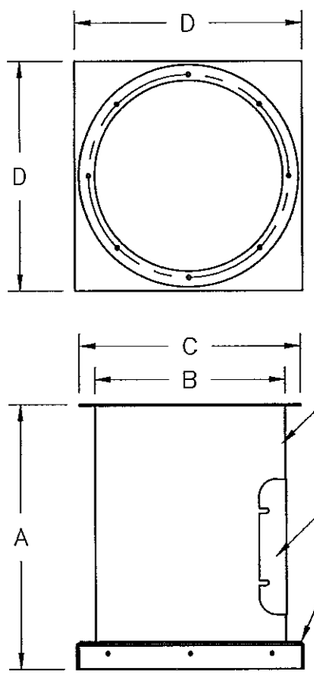

FAN BODY

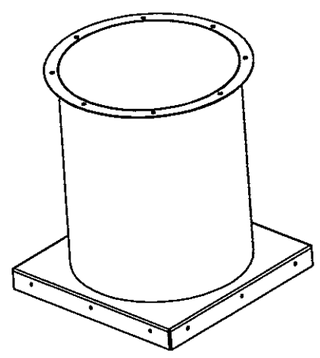

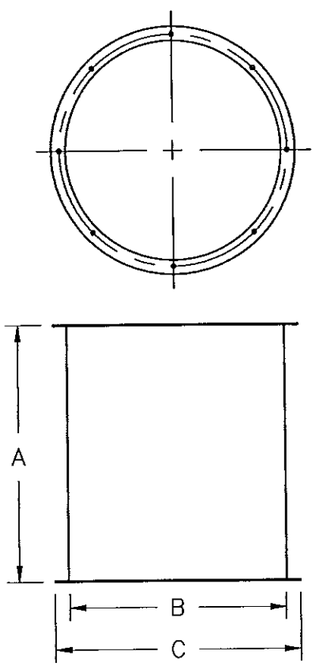

EXTENSION

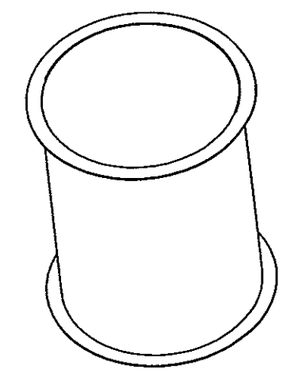

Approved as complying with the Florida Building Code
Date 08/28/2014
NOA# 14-0528.05
Miami Dade Product Control
By

GREENHECK
P.O.BOX 410 SCHOFIELD, WISCONSIN 54476-0410

DRAWN BY	WOTRUBA
DATE	01/2014
SUPERSEDES	
SCALE	
ECO	
ENG. REF.	NOA TESTING
CAD DRAWING NO.	VK–H–1001
	B

TITLE
VK–H 9–36
VK–HS 9–36
FAN BODY &
EXTENSION
SHEET 6 OF 10

ALL DIMENSIONS ARE IN INCHES.

UNIT SIZE	A	B	C	QTY. X	FASTENER J DESCRIPTION	MATERIAL PANELS/DOORS
VEKTOR-H 9	17.88	24.50	22.25	38	SCR,TEK,HWH, #12-14X.875, SS,410	14 GA CRS DS
VEKTOR-H 10	17.88	24.50	22.25	38		
VEKTOR-H 12	17.88	24.50	22.25	38		
VEKTOR-H 13	21.00	25.50	24.18	38		
VEKTOR-H 16	22.00	27.50	28.00	40		
VEKTOR-H 18	22.25	28.25	34.13	40		
VEKTOR-H 22	23.50	31.50	40.13	40		
VEKTOR-H 24	24.88	34.50	46.13	44		
VEKTOR-H 30	26.50	37.50	52.13	44		
VEKTOR-H 36	28.75	43.50	58.13	44		

UNIT SIZE	A	B	C	QTY. Y	QTY. Z	FASTENER G DESCRIPTION	FASTENER J DESCRIPTION	MATERIAL PANELS/DOOR/LEGS
VEKTOR-H 9	48.00	24.50	22.25	8	58	SCR,CS,HH, .313-18X1, SS,316, W/EPDM,WSHR	SCR,TEK,HWH, #12-14X.875, SS,410	16 GA CRS DS
VEKTOR-H 10	48.00	24.50	22.25	8	58			
VEKTOR-H 12	48.00	24.50	22.25	8	58			
VEKTOR-H 13	48.00	25.50	24.18	8	62			
VEKTOR-H 16	48.00	27.50	28.00	8	62			
VEKTOR-H 18	48.00	28.25	34.13	8	62			
VEKTOR-H 22	48.00	31.50	40.13	8	64			
VEKTOR-H 24	48.00	34.50	46.13	8	72			
VEKTOR-H 30	48.00	37.50	52.13	8	72			
VEKTOR-H 36	48.00	43.50	58.13	8	74			

UNIT SIZE	A	B	C	QTY W.	FASTENER J DESCRIPTION	MATERIAL PANELS
VEKTOR-H 9	14.50	20.13	14.75	16	SCR,TEK,HWH, #12-14X.875, SS,410	18 GA. CRS DS
VEKTOR-H 10	14.50	20.13	14.75	16		
VEKTOR-H 12	14.50	20.13	14.75	16		
VEKTOR-H 13	14.50	20.13	14.75	16		
VEKTOR-H 16	15.13	21.13	16.00	16		
VEKTOR-H 18	16.75	22.25	16.00	18		
VEKTOR-H 22	17.75	26.63	22.75	20		
VEKTOR-H 24	17.75	28.13	22.75	20		
VEKTOR-H 30	19.50	30.63	22.75	24		
VEKTOR-H 36	21.00	34.63	22.75	36		

RICE ENGINEERING
105 School Creek Trail
Luxemburg, WI 54217
Phone 920.845 1042
Fax 920.845 1048
www.rice-inc.com

Florida Firm No: F-01000005061
Certificate of Authorization: #9090
L. David Rice
Registration No: 50923

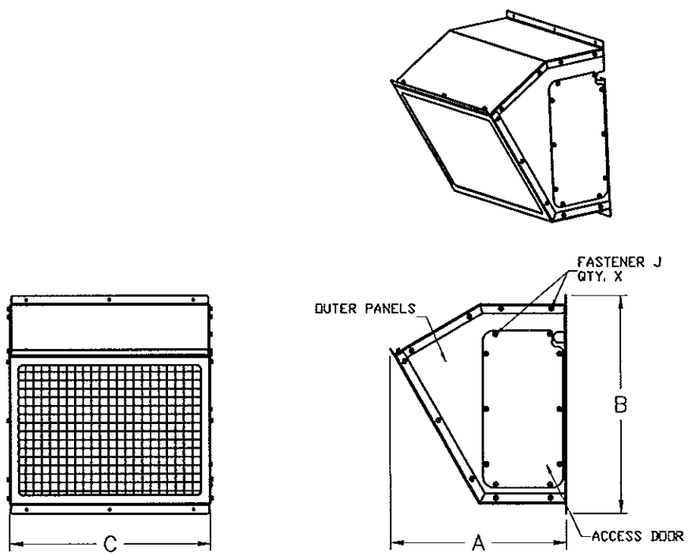

STANDARD WEATHERHOOD

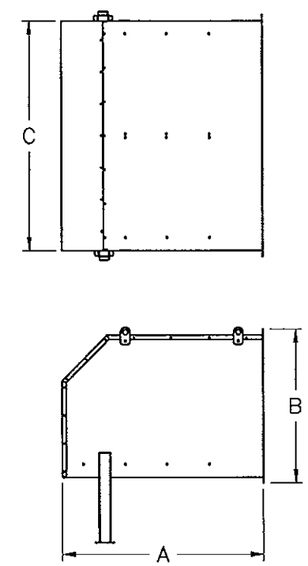

ATTENUATING WEATHERHOOD

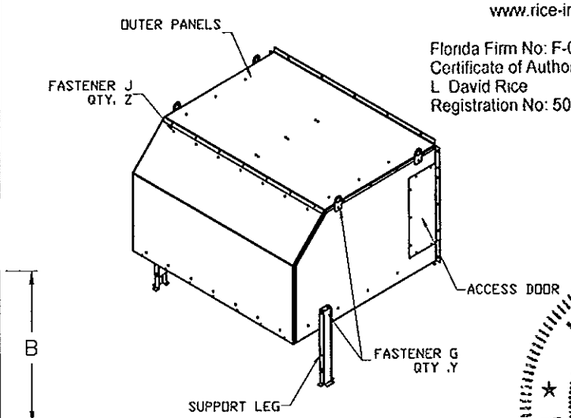

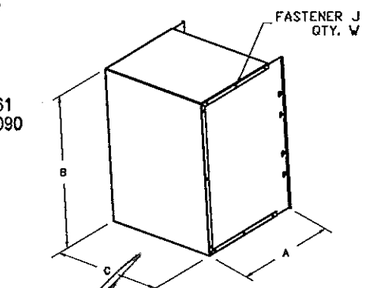

MOTOR COVER

L. DAVID RICE
LICENSE
No. 50923
STATE OF FLORIDA
PROFESSIONAL ENGINEER

JUN 0 3 2014

Approved as complying with the Florida Building Code
Date 08/28/2014
NOA# 14-0325.05
Miami Dade Product Control
By

GREENHECK
P.O.BOX 410 SCHOFIELD, WISCONSIN 54476-0410

TITLE	VK-H 9-36 VK-HS 9-36 WEATHERHOODS & MOTOR COVER SHEET 7 OF 10
DRAWN BY	WOTRUBA
DATE	01/2014
SUPERSEDES	
SCALE	
ECO	
ENG. REF.	NOA TESTING
CAD DRAWING NO.	VK-H-1001 B

ALL DIMENSIONS ARE IN INCHES
HRS POCS=HOT ROLLED STEEL, PICKLED AND OILED COMMERCIAL STEEL
HRS POCS MATERIALS ARE COVERED WITH AN ELECTROSTATIC POWDER COATING

UNIT SIZE	A	B	MATERIAL		
			EXTR PNL's	ACS DR	DMPR CVR
VEKTOR-H 9	29.50	21.88	12 GA. HRS POCS	12 GA. HRS POCS	12 GA. HRS POCS
VEKTOR-H 10	29.50	21.88			
VEKTOR-H 12	29.50	21.88			
VEKTOR-H 13	30.50	23.88			
VEKTOR-H 16	32.50	27.88			
VEKTOR-H 18	33.50	33.88			
VEKTOR-H 22	36.50	39.88			
VEKTOR-H 24	39.50	45.88			
VEKTOR-H 30	42.50	51.88			
VEKTOR-H 36	48.50	57.88			

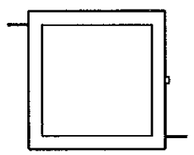

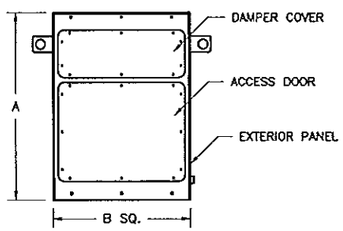

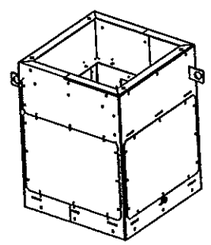

1X1 BYPASS AIR PLENUM

UNIT SIZE	A	B	C	MATERIAL		
				EXTR PNL's	ACS DR	DMPR CVR
VEKTOR-H 9	29.50	75.58	21.88	12 GA. HRS POCS	12 GA. HRS POCS	12 GA. HRS POCS
VEKTOR-H 10	29.50	75.58	21.88			
VEKTOR-H 12	29.50	75.58	21.88			
VEKTOR-H 13	30.50	81.58	23.88			
VEKTOR-H 16	32.50	93.58	27.88			
VEKTOR-H 18	33.50	111.58	33.88			
VEKTOR-H 22	36.50	129.58	39.88			
VEKTOR-H 24	39.50	147.58	45.88			
VEKTOR-H 30	42.50	165.58	51.88			
VEKTOR-H 36	48.50	183.58	57.88			

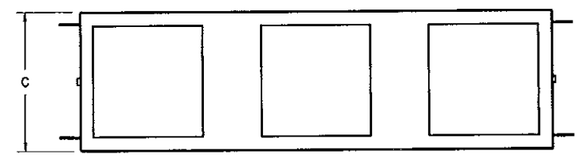

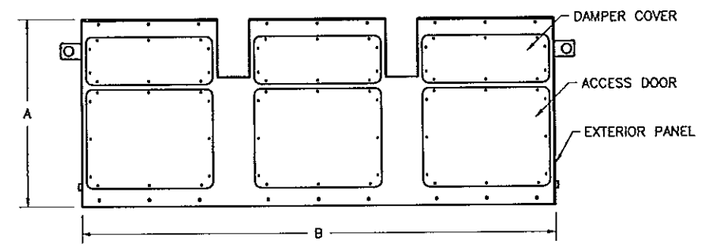

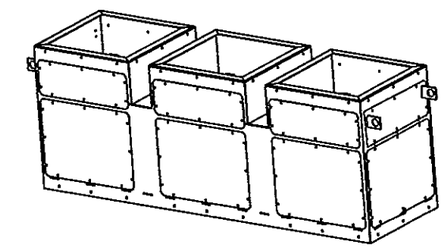

3X1 BYPASS AIR PLENUM

UNIT SIZE	A	B	C	MATERIAL		
				EXTR PNL's	ACS DR	DMPR CVR
VEKTOR-H 9	29.50	48.71	21.88	12 GA. HRS POCS	12 GA. HRS POCS	12 GA. HRS POCS
VEKTOR-H 10	29.50	48.71	21.88			
VEKTOR-H 12	29.50	48.71	21.88			
VEKTOR-H 13	30.50	52.71	23.88			
VEKTOR-H 16	32.50	60.71	27.88			
VEKTOR-H 18	33.50	72.71	33.88			
VEKTOR-H 22	36.50	84.71	39.88			
VEKTOR-H 24	39.50	96.71	45.88			
VEKTOR-H 30	42.50	108.71	51.88			
VEKTOR-H 36	48.50	120.71	57.88			

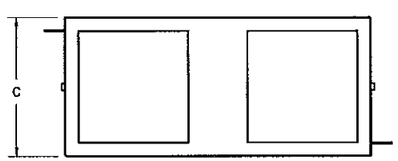

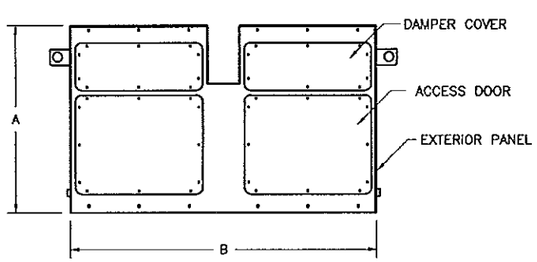

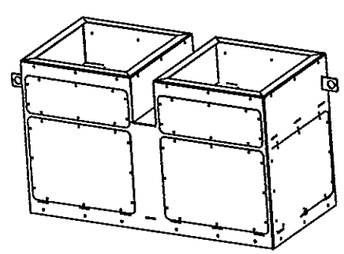

2X1 BYPASS AIR PLENUM

RICE
ENGINEERING
105 School Creek Trail
Luxemburg, WI 54217
Phone 920.845.1042
Fax 920.845.1048
www.rice-inc.com

Florida Firm No F-01000005061
Certificate of Authorization: #9090
L David Rice
Registration No 50923

L. DAVID RICE
LICENSE
No. 50923
STATE OF FLORIDA
PROFESSIONAL ENGINEER

JUN 0 3 2014

Approved as complying with the Florida Building Code
Date 08/28/2014
NOA# 14-0325.05
Miami Dade Product Control
By

GREENHECK
P.O.BOX 410 SCHOFIELD, WISCONSIN 54476-0410

TITLE: VK-H 9-36 VK-HS 9-36 BYPASS AIR PLENUMS SHEET 8 OF 10	DRAWN BY: WOTRUBA	ECO:
	DATE: 01/2014	ENG REF.: NOA TESTING
	SUPERSEDES:	
	SCALE:	
	CAD DRAWING NO.: VK-H-1001	B

ALL DIMENSIONS ARE IN INCHES.
MAX. ROOF CURB HEIGHT IS 24 INCHES.
ALL WELDS ARE TYPICAL FOR 1x1, 2x1, & 3x1

UNIT	ACTUAL OUTSIDE (SQ.) A	ACTUAL INSIDE (SQ.) B	MATERIAL
VEKTOR-H 9	21	17.5	12 GA. GALV
VEKTOR-H 10	21	17.5	
VEKTOR-H 12	21	17.5	
VEKTOR-H 13	23	19.5	
VEKTOR-H 16	27	23.5	
VEKTOR-H 18	33	29.5	
VEKTOR-H 22	39	35.5	
VEKTOR-H 24	45	41.5	
VEKTOR-H 30	51	47.5	
VEKTOR-H 36	57	53.5	

UNIT	ACTUAL OUTSIDE A	ACTUAL INSIDE B	ACTUAL OUTSIDE C	ACTUAL INSIDE C	MATERIAL
VEKTOR-H 9	21	17.5	48	44.5	12 GA. GALV
VEKTOR-H 10	21	17.5	48	44.5	
VEKTOR-H 12	21	17.5	48	44.5	
VEKTOR-H 13	23	19.5	52	48.5	
VEKTOR-H 16	27	23.5	60	56.5	
VEKTOR-H 18	33	29.5	72	68.5	
VEKTOR-H 22	39	35.5	84	80.5	
VEKTOR-H 24	45	41.5	96	92.5	
VEKTOR-H 30	51	47.5	108	104.5	
VEKTOR-H 36	57	53.5	120	116.5	

UNIT	ACTUAL OUTSIDE A	ACTUAL INSIDE B	ACTUAL OUTSIDE C	ACTUAL INSIDE C	MATERIAL
VEKTOR-H 9	21	17.5	74	70.5	12 GA. GALV
VEKTOR-H 10	21	17.5	74	70.5	
VEKTOR-H 12	21	17.5	74	70.5	
VEKTOR-H 13	23	19.5	80	76.5	
VEKTOR-H 16	27	23.5	92	88.5	
VEKTOR-H 18	33	29.5	110	106.5	
VEKTOR-H 22	39	35.5	128	124.5	
VEKTOR-H 24	45	41.5	146	142.5	
VEKTOR-H 30	51	47.5	164	160.5	
VEKTOR-H 36	57	53.5	182	178.5	

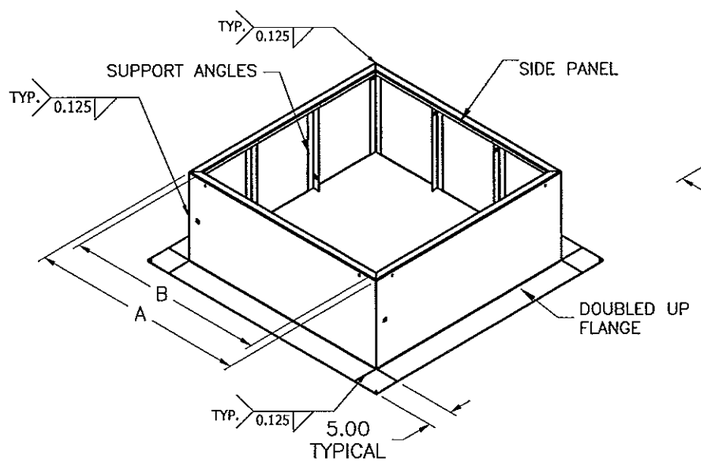

1X1 ROOF CURB

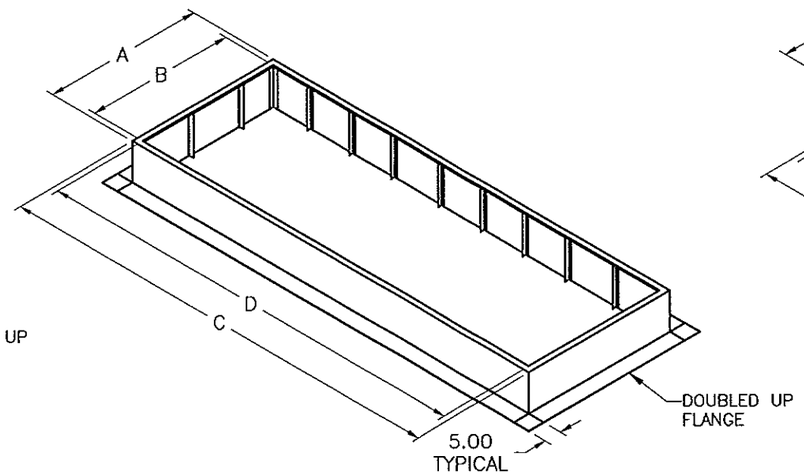

2X1 ROOF CURB

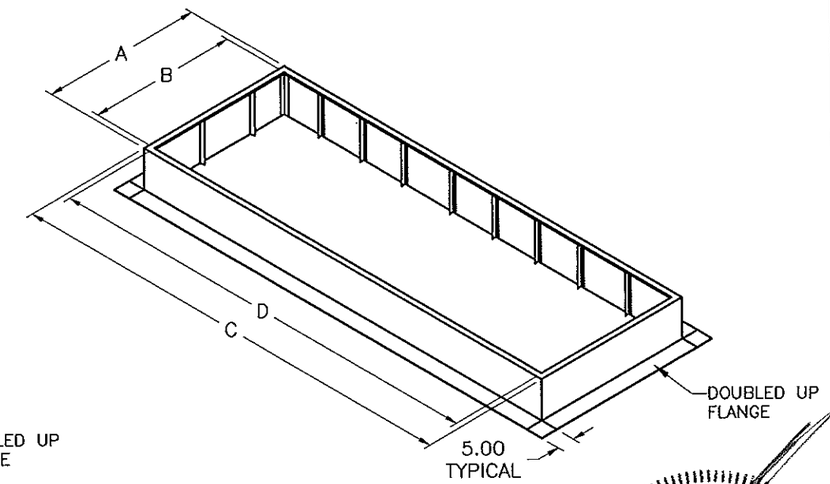

3X1 ROOF CURB

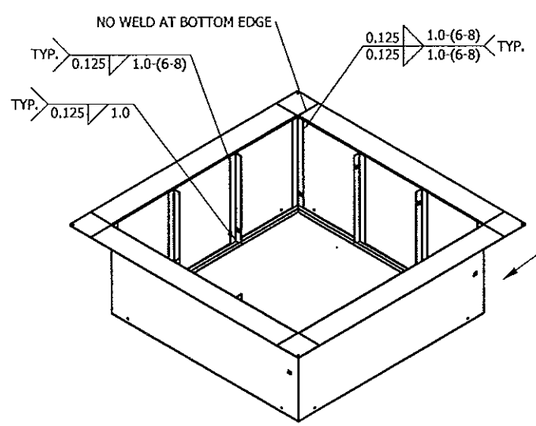

BOTTOM VIEW SHOWN FOR CLARITY

RICE ENGINEERING
105 School Creek Trail
Luxemburg, WI 54217
Phone 920.845 1042
Fax 920.845 1048
www.rice-inc.com

Florida Firm No. F-01000005061
Certificate of Authorization: #9090
L. David Rice
Registration No: 50923

L. DAVID RICE LICENSE No. 50923 STATE OF FLORIDA PROFESSIONAL ENGINEER

JUN 0 3 2014

Approved as complying with the Florida Building Code
Date 08/28/2014
NOA# 14-0325.05
Miami Dade Product Control
By

GREENHECK
P.O.BOX 410 SCHOFIELD, WISCONSIN 54476-0410

TITLE: VK-H 9-36 VK-HS 9-36 ROOF CURBS SHEET 9 OF 10	DRAWN BY: WOTRUBA	ECO:
	DATE: 01/2014	ENG. REF.: NOA TESTING
	SUPERSEDES:	
	SCALE:	
	CAD DRAWING NO.: VK-H-1001	B

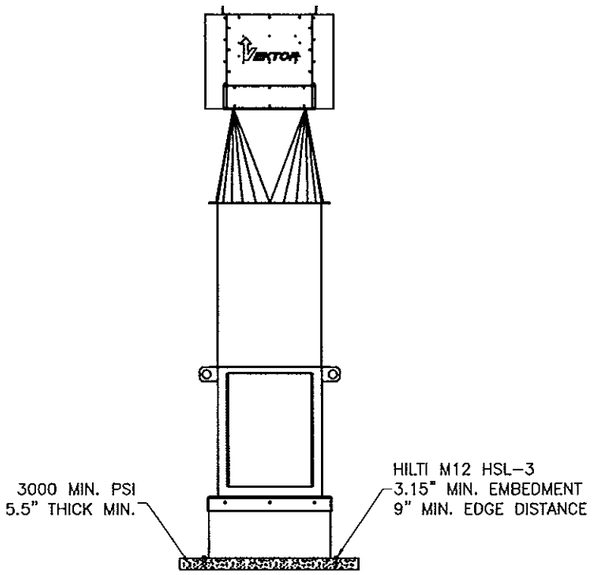

CONCRETE DECK ANCHORING

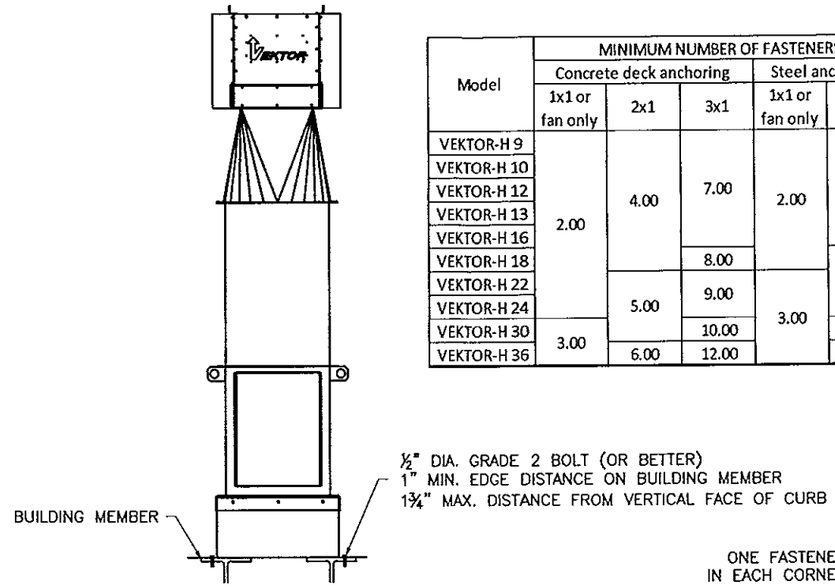

STEEL ANCHORING–THRU BOLTS

Model	MINIMUM NUMBER OF FASTENERS PER SIDE TO ATTACH CURB TO STRUCTURE (excludes 4 corner fasteners)											
	Concrete deck anchoring			Steel anchoring-thru bolts			Timber anchoring			Steel anchoring-self drill/tap		
	1x1 or fan only	2x1	3x1	1x1 or fan only	2x1	3x1	1x1 or fan only	2x1	3x1	1x1 or fan only	2x1	3x1
VEKTOR-H 9	2.00	4.00	7.00	2.00	6.00	6.00	3.00	5.00	10.00	3.00	7.00	14.00
VEKTOR-H 10												
VEKTOR-H 12												
VEKTOR-H 13										4.00		
VEKTOR-H 16								6.00	11.00		8.00	16.00
VEKTOR-H 18			8.00		4.00	8.00	4.00		12.00			
VEKTOR-H 22		5.00	9.00	3.00				7.00	14.00		9.00	17.00
VEKTOR-H 24												
VEKTOR-H 30	3.00		10.00		5.00	10.00	5.00	8.00	16.00	5.00	10.00	20.00
VEKTOR-H 36		6.00	12.00		6.00	12.00		9.00	18.00	6.00	11.00	23.00

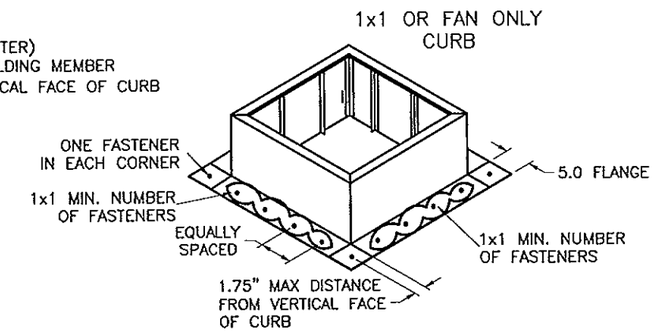

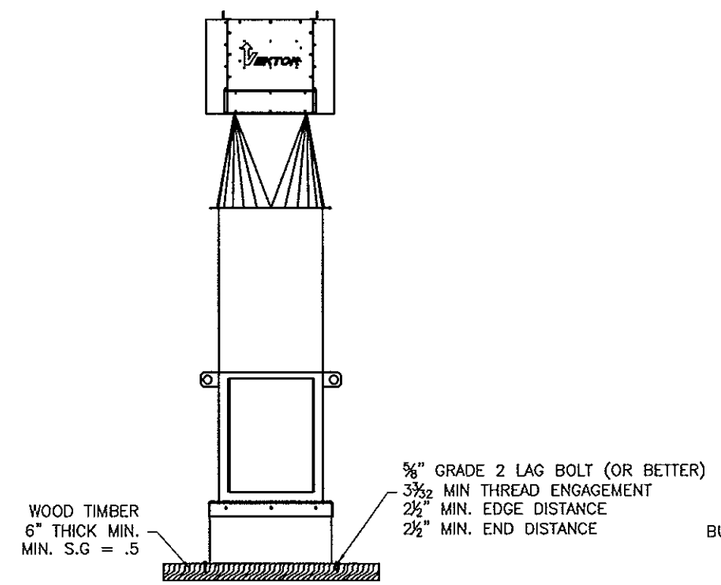

TIMBER ANCHORING

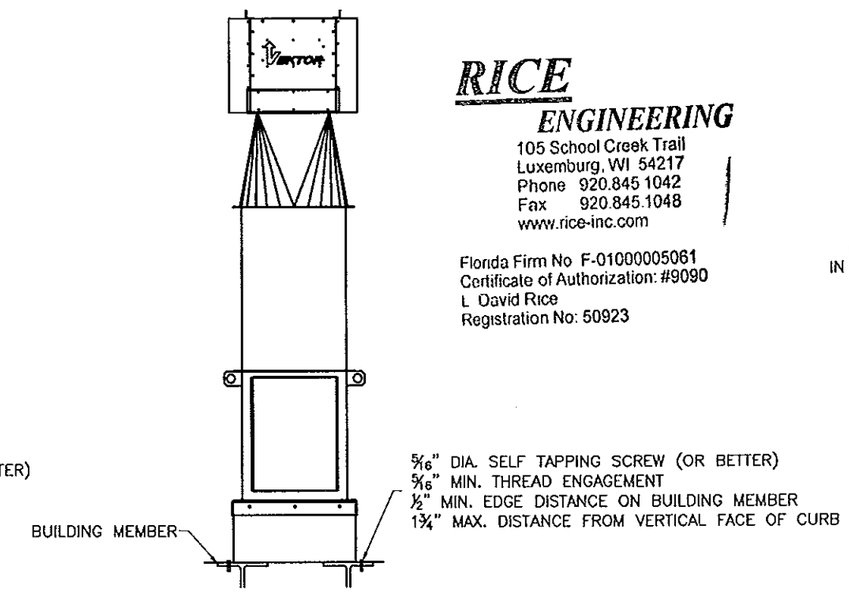

STEEL ANCHORING–SELF DRILL/TAP FASTENERS

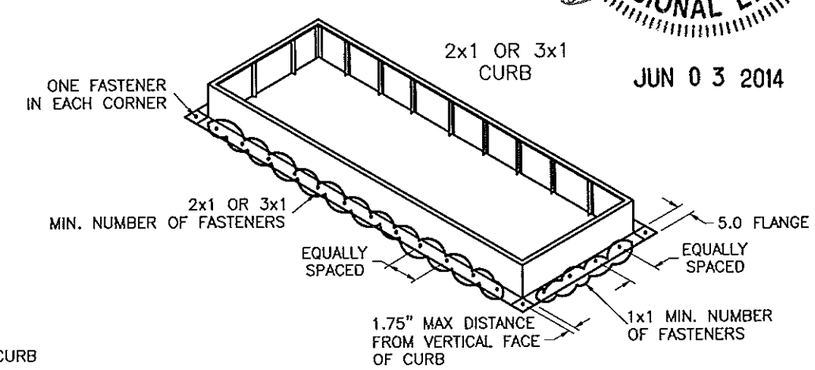

RICE ENGINEERING
105 School Creek Trail
Luxemburg, WI 54217
Phone 920.845.1042
Fax 920.845.1048
www.rice-inc.com

Florida Firm No F-01000005061
Certificate of Authorization: #9090
L David Rice
Registration No: 50923

L. DAVID RICE
LICENSE
No. 50923
STATE OF FLORIDA
PROFESSIONAL ENGINEER

JUN 0 3 2014

Approved as complying with the
Florida Building Code
Date 08/28/2014
NOA# 14-0325.05
Miami Dade Product Control
By

GREENHECK
P.O.BOX 410 SCHOFIELD, WISCONSIN 54476-0410

DRAWN BY	WOTRUBA
DATE	01/2014
SUPERSEDES	
SCALE	1/25
ECO	
ENG. REF.	NOA TESTING
TITLE	VEKTOR–H 9–36 VEKTOR–HS 9–36 ROOF CURB INSTALLATION SHEET 10 OF 10
CAD DRAWING NO.	VK–H–1001
	B