MIAMI-DADE COUNTY
PRODUCT CONTROL SECTION
11805 SW 26 Street, Room 208
Miami, Florida 33175-2474
T (786) 315-2590 F (786) 315-2599
www.miamidade.gov/economy

DEPARTMENT OF REGULATORY AND ECONOMIC RESOURCES (RER)
BOARD AND CODE ADMINISTRATION DIVISION

NOTICE OF ACCEPTANCE (NOA)

U. S. Aluminum (FL),
Division of C. R. Laurence Company.
7500 NW 69th Ave
Miami, FL 33166

SCOPE:

This NOA is being issued under the applicable rules and regulations governing the use of construction materials. The documentation submitted has been reviewed and accepted by Miami-Dade County PERA -Product Control Section to be used in Miami Dade County and other areas where allowed by the Authority Having Jurisdiction (AHJ).

This NOA shall not be valid after the expiration date stated below. The Miami-Dade County Product Control Section (In Miami Dade County) and/or the AHJ (in areas other than Miami Dade County) reserve the right to have this product or material tested for quality assurance purposes. If this product or material fails to perform in the accepted manner, the manufacturer will incur the expense of such testing and the AHJ may immediately revoke, modify, or suspend the use of such product or material within their jurisdiction. PERA reserves the right to revoke this acceptance, if it is determined by Miami-Dade County Product Control Section that this product or material fails to meet the requirements of the applicable building code.

This product is approved as described herein, and has been designed to comply with the Florida Building Code, including the High Velocity Hurricane Zone.

DESCRIPTION: Series "DH-350" Aluminum Outswing Entrance Door-Impact -L.M.I.

APPROVAL DOCUMENT: Drawing N0. **W04-83 Rev H,** titled "Series-DH-350 Alum Outswing Entrance Door", sheets 1 through 11.1 of 11, prepared by AL-Farooq Corporation, dated 10-05-04 and last revised on MAR 17, 2014, signed and sealed by Javad Ahmad, P.E., bearing the Miami-Dade County Product Control Revision stamp with the Notice of Acceptance number and expiration date by the Miami-Dade County Product Control Section.

MISSILE IMPACT RATING: Large and Small Missile Impact Resistant

Limitations:

1. This door can be installed in US Aluminum series DHS-500 Storefront System (under separate NOA), lower design pressure of door or storefront shall control for the entire assembly.
2. The Doors are not rated for water infiltration resistant. Design pressure rating is based on lock stile reinforcement & lock options (see sheets **3, 4 & 5**). See applicable DLO (day light Opening) w/ 8" or 10" bottom rails.
3. The doors w/ Narrow frame jamb item **#3** (5"x1"x3.5") is rated to max. DP=70 psf only.

LABELING: Each unit shall bear a permanent label with the manufacturer's name or logo, city, state and series and following statement: "Miami-Dade County Product Control Approved", noted herein.

RENEWAL of this NOA shall be considered after a renewal application has been filed and there has been no change in the applicable building code negatively affecting the performance of this product.

TERMINATION of this NOA will occur after the expiration date or if there has been a revision or change in the materials, use, and/or manufacture of the product or process. Misuse of this NOA as an endorsement of any product, for sales, advertising or any other purposes shall automatically terminate this NOA. Failure to comply with any section of this NOA shall be cause for termination and removal of NOA.

ADVERTISEMENT: The NOA number preceded by the words Miami-Dade County, Florida, and followed by the expiration date may be displayed in advertising literature. If any portion of the NOA is displayed, then it shall be done in its entirety.

INSPECTION: A copy of this entire NOA shall be provided to the user by the manufacturer or its distributors and shall be available for inspection at the job site at the request of the Building Official.

This NOA **revises NOA # 12-0628.01** and consists of this page 1 and evidence pages E-1 & E-2, as well as approval document mentioned above.

The submitted documentation was reviewed by **Ishaq I. Chanda, P.E.**

MIAMI-DADE COUNTY
APPROVED
4/28/14

NOTICE OF ACCEPTANCE: EVIDENCE SUBMITTED

A. DRAWINGS

1. Manufacturer's die drawings and sections (submitted under files **#12-0628.01/ #12-0406.03)**
2. Drawing N0. **W04-83 Rev H,** titled "Series-DH-350 Alum Outswing Entrance Door", sheets 1 through 1.1 of 11, prepared by AL-Farooq Corporation, dated 10-05-04 and last revised on MAR 17, 2014, signed and sealed by Javad Ahmad, signed and sealed by Javad Ahmad, P.E.

Note: This revision consist of addition of optional 10" bottom rails & update of glazing mfr.

B. TESTS (submitted under files #12-0628.01)

1. Test reports on: 1) Air Infiltration Test, per FBC, TAS 202-94
   2) Uniform Static Air Pressure Test, Loading per FBC TAS 202-94
   3) Water Resistance Test, per FBC, TAS 202-94 (Not conducted)
   4) Large Missile Impact Test per FBC, TAS 201-94
   5) Cyclic Wind Pressure Loading per FBC, TAS 203-94
   6) Forced Entry Test, per FBC 2411 3.2.1, TAS 202-94

along with marked-up drawings and installation diagram of aluminum outswing door w/ transom, prepared by Fenestration Testing Laboratory, Inc., Test Reports No. **FTL-6859,** dated 04/03/12 signed and sealed by Marlin D. Brinston, P. E.

2. Additional test reports (submitted under files **#12-0406.03/#10-012110)**
   1) Air Infiltration Test, per FBC, TAS 202-94
   2) Uniform Static Air Pressure Test, Loading per FBC TAS 202-94
   3) Water Resistance Test, per FBC, TAS 202-94 (Not conducted)
   4) Large Missile Impact Test per FBC, TAS 201-94
   5) Cyclic Wind Pressure Loading per FBC, TAS 203-94
   6) Forced Entry Test, per FBC 2411 3.2.1, TAS 202-94

Along with marked-up drawings and installation diagram of aluminum outswing entrance door, prepared by Fenestration Testing Laboratory, Inc., Test Reports No. **FTL-6545**, dated 08/24/2011, signed and sealed by Marlin D. Brinson, P. E.

Along with marked-up drawings and installation diagram of a aluminum outswing entrance door w/ transom and outswing doors w/ sidelites & transom , prepared by Fenestration Testing Laboratory, Inc., Test Report No(s) **FTL-4254**, dated 06/28/04, **FTL-4306,** dated 08/31/04 and **FTL-4320**, dated 09/15/04, all signed and sealed by Edmundo Largaespada, P.E.

C. CALCULATIONS

1. New 10" bottom Rail extrusion w/ strength properties and mounting screws, prepared by Al Farooq Corporation, dated MAR 17, 2014, signed and sealed by Javad Ahmad, P.E.
2. Anchor verification calculations and structural analysis, complying with FBC-2010, prepared by Al Farooq Corporation, dated JUN 19, 2012 and last revised on SEP 14, 2012, signed and sealed by Javad Ahmad, P.E. (submitted under files **#12-0628.01/ #12-0406.03)**
3. Glazing complies w/ ASTME-1300-02 & -04

D. QUALITY ASSURANCE

1. Miami Dade Department of Regulatory and Economic Resources (RER).

Ishaq I. Chanda

Ishaq I. Chanda, P.E.
Product Control Examiner
NOA No. 14-0331.01
Expiration Date: February 10, 2015
Approval Date: May 08, 2014

NOTICE OF ACCEPTANCE: EVIDENCE SUBMITTED

E. MATERIAL CERTIFICATIONS

1. Notice of Acceptance No. **11-0624.02** issued to E.I. DuPont DeNemours & Co., Inc. for their **"DuPont Sentry Glass ® interlayer"**, expiring on 01/14/17.
2. Notice of Acceptance No. **12-1213.08,** issued to Eastman Chemical Co. (MA) former Solutia, Inc. for "Saflex CP: Saflex & Saflex HP Glass Interlayer w/ PET core", expiring on 12/11/18.

F. STATEMENTS (All items #1 below, submitted under files #**12-0628.01**)

1. Statement letter of conformance to FBC 2010 and letter of no financial interest, prepared by Al Farooq Corporation, dated 04/26/12, signed and sealed by Javad Ahmad, P.E
2. Statement letter of conformance to FBC 2010 and letter of no financial interest, prepared by Al Farooq Corporation, dated 04/26/12, signed and sealed by Javad Ahmad, P.E.
3. Lab compliance as part of the above referenced test reports.
4. Press Release dated August 25, 2011, issued by C. R. Laurence Company, Inc. of announcement of C. R. Laurance (CRL) and U. S. Aluminum Company (USAL) on the integration of Delta Doors with U.S. Aluminum, Florida.
5. Press Release dated 07/08/11, issued by C. R. Laurence Company, Inc. (CRL) announcing the Acquisition of U.S. Aluminum Company (USAL).

G. OTHER

1. This NOA **revises NOA # 12-0628.01**, expiring on FEB 10, 2015.
2. Test proposals dated 11/08/11 approved by PERA & # 02-0472 dated 07-05-02 & #06-0182 dated 6/7/6 issued by BCCO.
3. Previous associated file **NOA(s) 12-0406.03** and **# 10-0121.10 (Delta Doors Mfg. Co.)**.

Ishaq I. Chanda

Ishaq I. Chanda, P.E.
Product Control Examiner
NOA No. 14-0331.01
Expiration Date: February 10, 2015
Approval Date: May 08, 2014

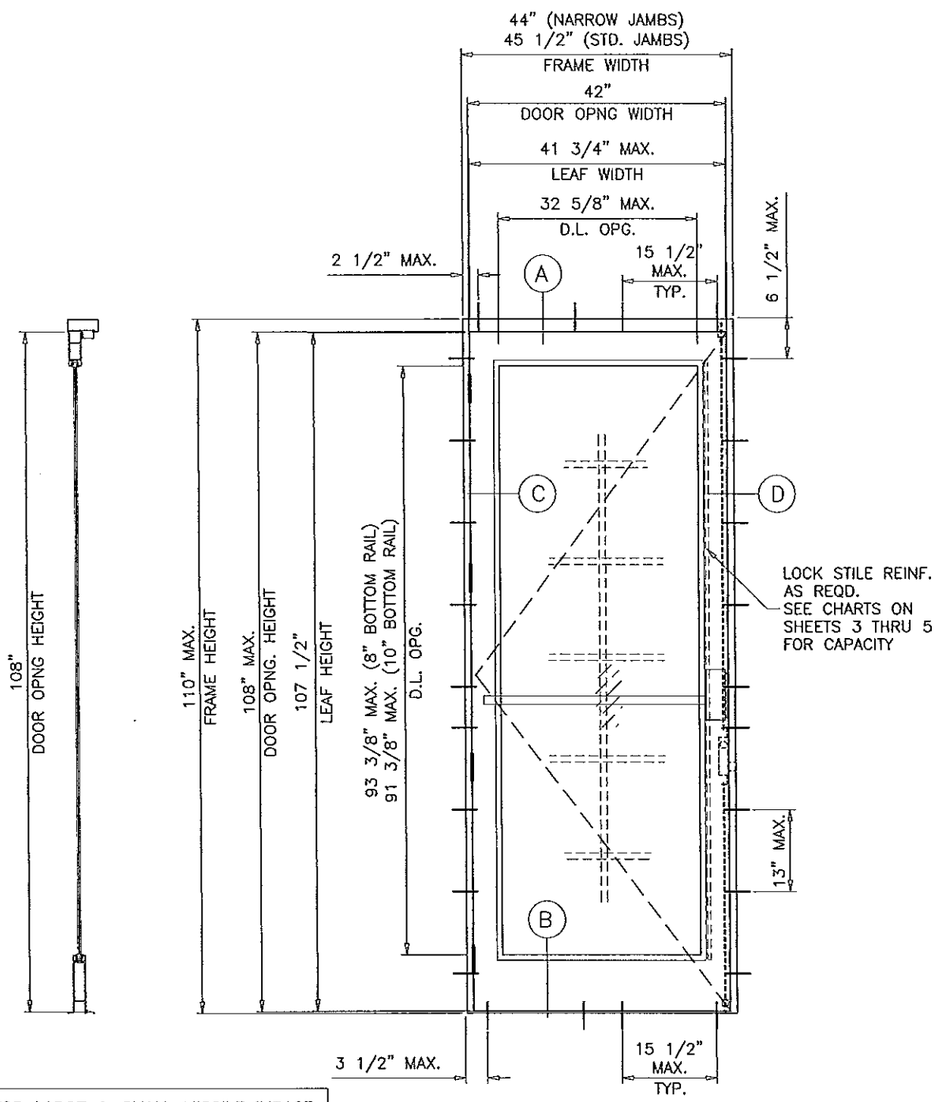

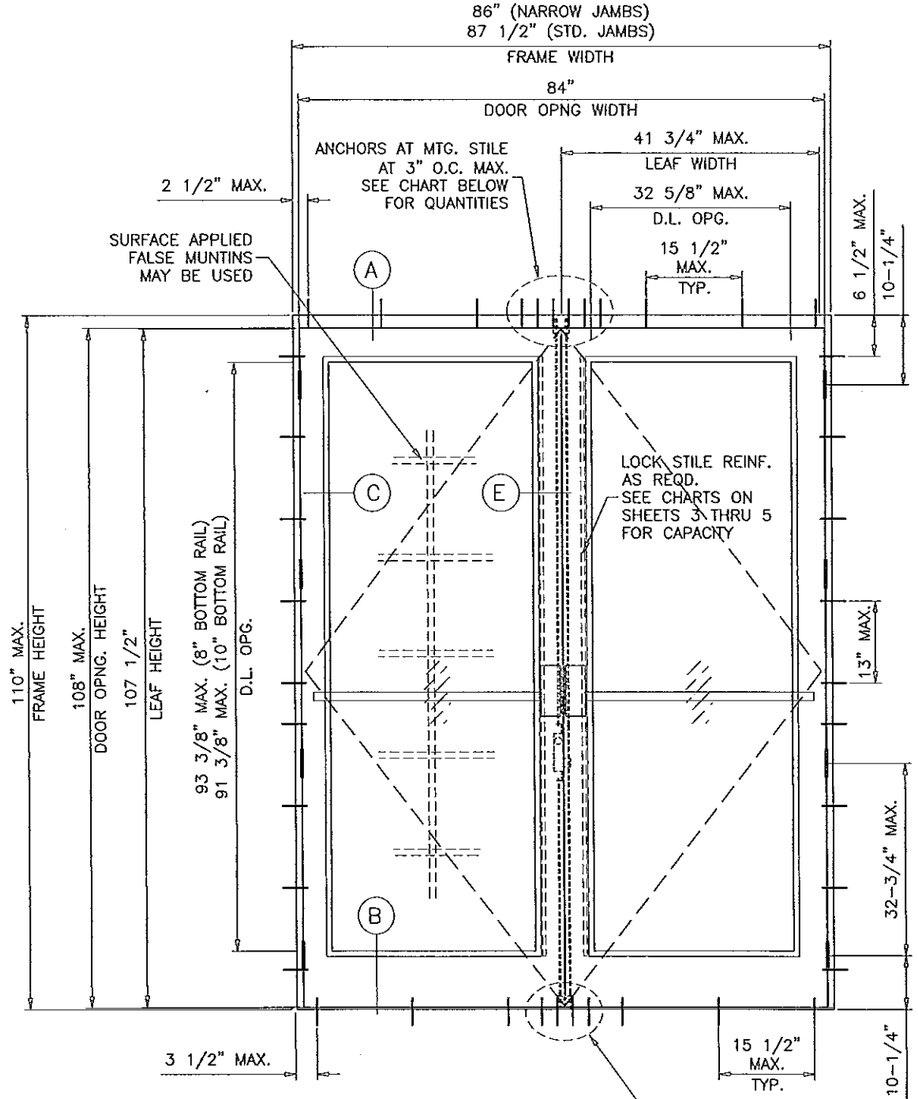

THESE DOORS ARE RATED FOR LARGE & SMALL MISSILE IMPACT. SHUTTERS ARE NOT REQUIRED.

TYPICAL ELEVATIONS

NUMBER OF ANCHORS AT MTG. STILE ENDS				
MAXIMUM DESIGN LOAD	DOOR OPNG. HEIGHTS UPTO	SUBSTRATE		
		WOOD	CONCRETE	METAL
75 PSF UN-REINF.	80"-96 IN.	5	3	3
	108 IN.	5	4	4
100 PSF REINF.	80'-96 IN.	6	4	4
	108 IN.	7	5	5

PRODUCT REVISED
as complying with the Florida Building Code
Acceptance No 14-0331.01
Expiration Date FEB 10, 2015
By [signature]
Miami Dade Product Control

SERIES DH-350
ALUMINUM OUT-SWING ENTRANCE DOOR

SEE CHARTS ON SHEET 3 FOR DESIGN LOAD CAPACITY OF SINGLE (X) AND DOUBLE (XX) DOORS W/O TRANSOM.

SEE CHARTS ON SHEET 4 FOR DESIGN LOAD CAPACITY OF SINGLE (O/X) AND SHEET 5 FOR DOUBLE (O/XX) DOORS WITH TRANSOM.

DOORS CAN ALSO BE USED WITH DHS-500 STOREFRONT SYSTEM. FOR DOORS WITH STOREFRONT SYSTEM SEE SEPARATE NOA FOR DOOR MULLION CAPACITY AND ANCHORING REQUIREMENTS.

THE LOWEST VALUE RESULTING FROM DOOR CAPACITY CHARTS OR STOREFRONT NOA WILL APPLY TO ENTIRE SYSTEM.

DOORS NOT APPROVED FOR INSTALLATIONS WHERE WATER INFILTRATION RESISTANCE IS REQUIRED.

THIS PRODUCT HAS BEEN DESIGNED AND TESTED TO COMPLY WITH THE REQUIREMENTS OF THE FLORIDA BUILDING CODE INCLUDING HIGH VELOCITY HURRICANE ZONE (HVHZ).

1BY OR 2BY WOOD BUCKS BY OTHERS, MUST BE ANCHORED PROPERLY TO TRANSFER LOADS TO THE STRUCTURE.

ANCHORS SHALL BE AS LISTED, SPACED AS SHOWN ON DETAILS, ANCHORS EMBEDMENT TO BASE MATERIAL SHALL BE BEYOND WALL DRESSING OR STUCCO.

ANCHORING OR LOADING CONDITIONS NOT SHOWN IN THESE DETAILS ARE NOT PART OF THIS APPROVAL.

A LOAD DURATION INCREASE IS USED IN DESIGN OF ANCHORS INTO WOOD ONLY.

MATERIALS INCLUDING BUT NOT LIMITED TO STEEL/METAL SCREWS, THAT COME INTO CONTACT WITH OTHER DISSIMILAR MATERIALS SHALL MEET THE REQUIREMENTS OF THE FLORIDA BLDG. CODE SECTION 2003.8.4.

Engr: JAVAD AHMAD
CIVIL
FLA. PE # 70592
C.A.N. 3538

MAR 17 2014

AL-FAROOQ CORPORATION
ENGINEERS & PRODUCT DEVELOPMENT
1235 S.W. 87 AVE
MIAMI, FLORIDA 33174
TEL. (305) 264-8100 FAX. (305) 262-6978

COMP-ANL\W04-83DD

Series 'DH-350' Aluminum Out-Swing Door (L.M.I.)

US Aluminum
Division Of C.R. Laurence Co., Inc.
7500 N.W. 69TH AVE.
MIAMI, FL 33166
TEL. (305) 888-0077 FAX. (305) 884-3111

revisions:

no	date	by	description
D	10.04.11		UPDATED TO 2010 FBC
E	06.21.12		NO CHANGE THIS SHEET
F	08.29.12		REV. PER RER COMMENTS
G	10.03.12		REV. PER RER COMMENTS
H	03.14.14		BOTTOM RAIL OPTION ADDED

date: 10-05-04
scale: 1/2"=1'-0"
dr. by: HAMID
chk. by:

drawing no.
W04-83

sheet 1 of 11

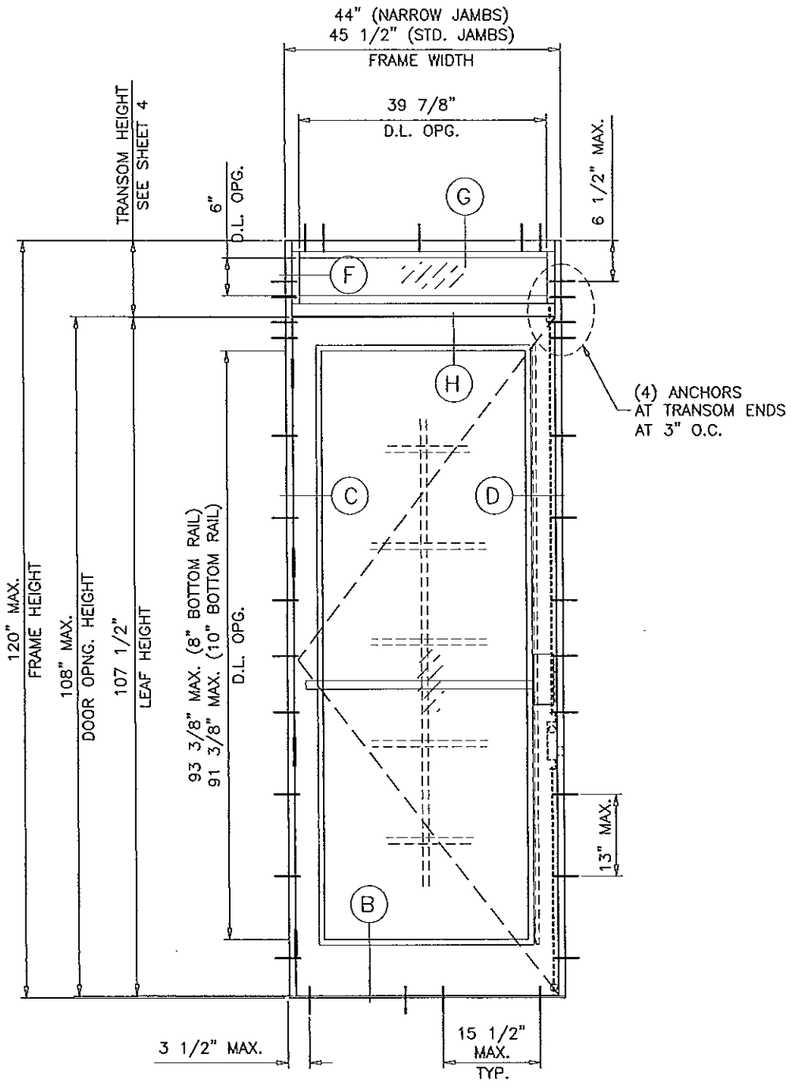

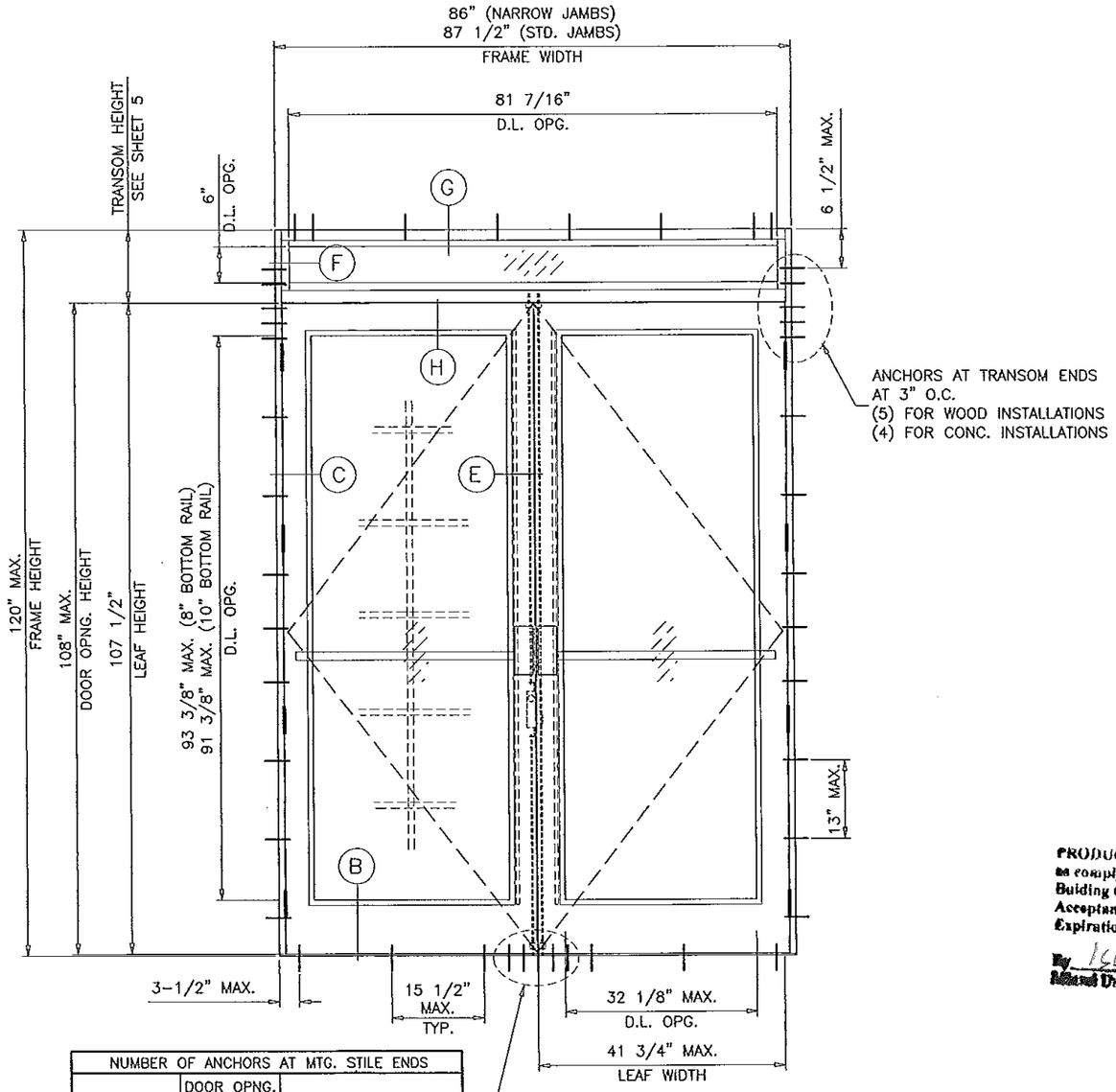

NUMBER OF ANCHORS AT MTG. STILE ENDS				
MAXIMUM DESIGN LOAD	DOOR OPNG. HEIGHTS UPTO	SUBSTRATE		
		WOOD	CONCRETE	METAL
75 PSF UN-REINF.	80"-96 IN.	5	3	3
	108 IN.	5	4	4
100 PSF REINF.	80"-96 IN.	6	4	4
	108 IN.	7	5	5

TYPICAL ELEVATIONS

PRODUCT REVISED
as complying with the Florida
Building Code
Acceptance No. 14-0331.01
Expiration Date 2/10/15
By Miami Dade Product Control

Engr: JAVAD AHMAD
CIVIL
FLA. PE # 70592
C.A.N. 3538
MAR 17 2014

AL-FAROOQ CORPORATION
ENGINEERS & PRODUCT DEVELOPMENT
1235 S.W. 87 AVE
MIAMI, FLORIDA 33174
TEL. (305) 264-8100 FAX. (305) 262-6978
COMP-ANL\W04-83DD

Series 'DH-350' Aluminum Out-Swing Door (L.M.I.)

US Aluminum
Division Of C.R. Laurence Co., Inc.
7500 N.W. 69TH AVE.
MIAMI, FL 33166
TEL. (305) 888-0077 FAX. (305) 884-3111

revisions:

no	date	by	description
F	08.29.12		REV. PER RER COMMENTS
G	10.03.12		REV. PER RER COMMENTS
H	03.14.14		BOTTOM RAIL OPTION ADDED

date: 10-05-04
scale: 1/2"=1'-0"
dr. by: HAMID
chk. by:

drawing no.
W04-83

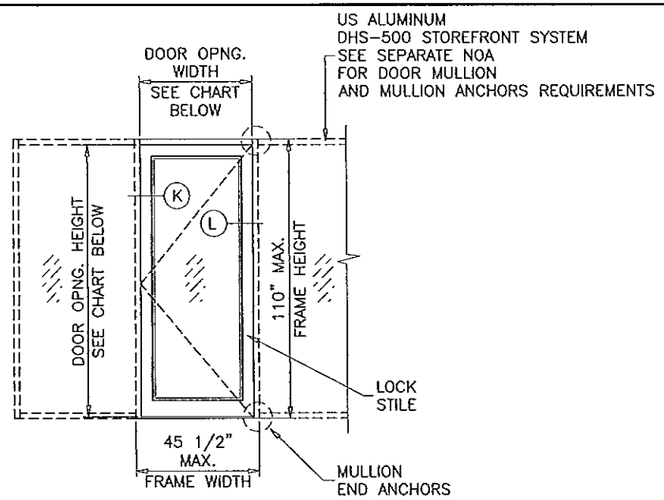

(X)

NOTE:
GLASS CAPACITIES ON THIS SHEET ARE BASED ON ASTM E1300-09 (3 SEC. GUSTS) AND FLORIDA BUILDING COMMISSION DECLARATORY STATEMENT DCA05-DEC-219

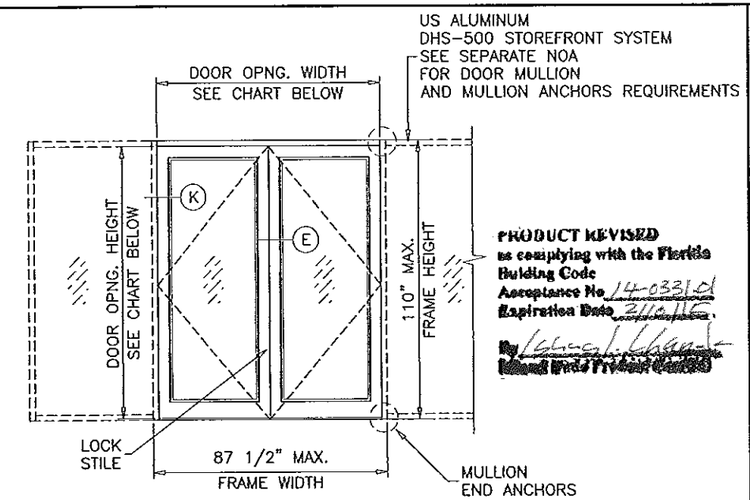

PRODUCT REVISED
as complying with the Florida Building Code
Acceptance No. 14-0331.01
Expiration Date 2/16/16
By [illegible]

(XX)

SINGLE ENTRANCE DOORS W/O TRANSOM				
DESIGN LOAD CAPACITY - PSF				
		GLASS TYPES 'A' & 'B'		
		LOCK OPTION 1	LOCK OPTIONS 2 & 3	
NOMINAL DIMS.		LOCK STILE UN-REINFORCED	LOCK STILE UN-REINFORCED	LOCK STILE REINFORCED
DOOR OPNG. WIDTH	DOOR OPNG. HEIGHT	EXT. (+) INT. (-)	EXT. (+) INT. (-)	EXT. (+) INT. (-)
32"	96"	70.0	75.0	100.0
36"		70.0	75.0	100.0
39"		70.0	75.0	100.0
42"		70.0	75.0	100.0
32"	102"	70.0	75.0	100.0
36"		70.0	75.0	100.0
39"		70.0	75.0	100.0
42"		70.0	75.0	100.0
32"	108"	70.0	75.0	100.0
36"		70.0	75.0	100.0
39"		70.0	75.0	100.0
42"		70.0	75.0	100.0

FOR LOCK OPTION DESCRIPTION SEE SHEET 10.

DOUBLE ENTRANCE DOORS W/O TRANSOM				
DESIGN LOAD CAPACITY - PSF				
		GLASS TYPES 'A' & 'B'		
		LOCK OPTION 1	LOCK OPTIONS 2 & 3	
NOMINAL DIMS.		LOCK STILE UN-REINFORCED	LOCK STILES UN-REINFORCED	LOCK STILES REINFORCED
DOOR OPNG. WIDTH	DOOR OPNG. HEIGHT	EXT. (+) INT. (-)	EXT. (+) INT. (-)	EXT. (+) INT. (-)
64"	96"	70.0	75.0	100.0
72"		70.0	75.0	100.0
78"		70.0	75.0	100.0
84"		70.0	75.0	100.0
64"	102"	70.0	75.0	100.0
72"		70.0	75.0	100.0
78"		70.0	75.0	100.0
84"		70.0	75.0	100.0
64"	108"	70.0	75.0	100.0
72"		70.0	70.0	100.0
78"		70.0	70.0	100.0
84"		70.0	70.0	100.0

FOR LOCK OPTION DESCRIPTION SEE SHEET 10.

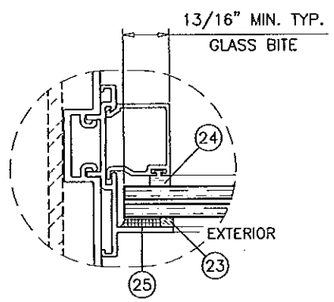

GLAZING DETAIL AT TRANSOM

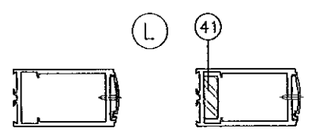

LOCK STILE UN-REINFORCED

LOCK STILE REINFORCED

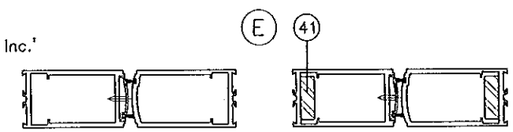

LOCK STILES UN-REINFORCED

LOCK STILES REINFORCED

FRAME HEIGHT = LEAF HEIGHT + 2.50"
FRAME WIDTH (X DOORS) = SINGLE LEAF WIDTH + 2.250" (NARROW JAMBS)
FRAME WIDTH (X DOORS) = SINGLE LEAF WIDTH + 3.750" (STD. JAMBS)
FRAME WIDTH (XX DOORS) = DOUBLE LEAF WIDTH + 2.50" (NARROW JAMBS)
FRAME WIDTH (XX DOORS) = DOUBLE LEAF WIDTH + 4.0" (STD. JAMBS)
D.L.O. HEIGHT = LEAF HEIGHT - 14.125" (8" BOTTOM RAIL)
D.L.O. HEIGHT = LEAF HEIGHT - 12.125" (10" BOTTOM RAIL)
D.L.O. WIDTH = LEAF WIDTH - 9.125"
DOOR LEAF WIDTH = DOOR OPNG WIDTH - .250"
DOOR LEAF HEIGHT = DOOR OPNG HEIGHT - .500"

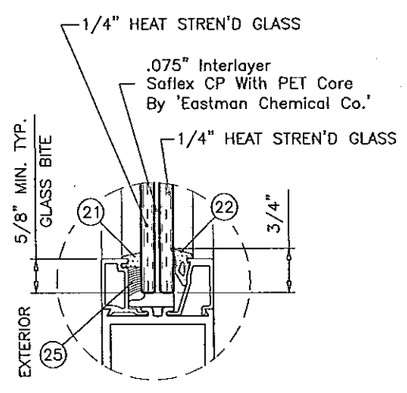

GLASS TYPE 'A'
9/16" OVERALL LAMINATED GLASS

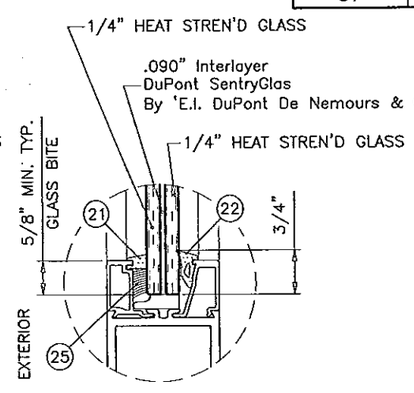

GLASS TYPE 'B'
9/16" OVERALL LAMINATED GLASS

GLAZING OPTIONS

Engr: JAVAD AHMAD
CIVIL
FLA. PE # 70592
C.A.N. 3538
MAR 07 2014

AL-FAROOQ CORPORATION
ENGINEERS & PRODUCT DEVELOPMENT
1235 S.W. 87 AVE
MIAMI, FLORIDA 33174
TEL. (305) 264-8100 FAX. (305) 262-6978
COMP-ANL\W04-83DD

Series 'DH-350' Aluminum Out-Swing Door (L.M.I.)

US Aluminum
Division Of C.R. Laurence Co., Inc.
7500 N.W. 69TH AVE.
MIAMI, FL 33166
TEL. (305) 888-0077 FAX. (305) 884-3111

revisions:			
no	date	by	description
D	10.04.11		GLASS & LOCK OPTIONS ADDED
E	06.21.12		REV. PER PERA COMMENTS
F	08.29.12		REV. PER RER COMMENTS
G	10.03.12		REV. PER RER COMMENTS
H	03.14.14		INTERLAYER NAME REV.

date: 10-05-04
scale: --
dr. by: HAMID
chk. by:

drawing no.
W04-83

SINGLE ENTRANCE DOORS WITH TRANSOM					
DESIGN LOAD CAPACITY – PSF					
			GLASS TYPES 'A' & 'B'		
			LOCK OPTION 1	LOCK OPTIONS 2 & 3	
NOMINAL DIMS.			LOCK STILE UN-REINFORCED	LOCK STILE UN-REINFORCED	LOCK STILE REINFORCED
DOOR OPNG. WIDTH INCHES	DOOR OPNG. HEIGHT INCHES	TRANSOM HEIGHT INCHES	EXT. (+) INT. (–)	EXT. (+) INT. (–)	EXT. (+) INT. (–)
36	80	12	70.0	75.0	100.0
		18	70.0	75.0	100.0
		24	70.0	75.0	100.0
		30	70.0	75.0	100.0
		36	70.0	75.0	100.0
39		12	70.0	75.0	100.0
		18	70.0	75.0	100.0
		24	70.0	75.0	100.0
		30	70.0	75.0	100.0
		36	70.0	75.0	100.0
42		12	70.0	75.0	100.0
		18	70.0	75.0	100.0
		24	70.0	75.0	100.0
		30	70.0	75.0	100.0
		35-3/4	70.0	73.6	100.0
36	84	12	70.0	75.0	100.0
		18	70.0	75.0	100.0
		24	70.0	75.0	100.0
		30	70.0	75.0	100.0
		36	70.0	75.0	100.0
39		12	70.0	75.0	100.0
		18	70.0	75.0	100.0
		24	70.0	75.0	100.0
		30	70.0	75.0	100.0
		36	70.0	75.0	100.0
42		12	70.0	75.0	100.0
		18	70.0	75.0	100.0
		24	70.0	75.0	100.0
		30	70.0	75.0	100.0
		35-3/4	69.6	69.6	100.0
36	90	12	70.0	75.0	100.0
		18	70.0	75.0	100.0
		24	70.0	75.0	100.0
		30	70.0	75.0	100.0
39		12	70.0	75.0	100.0
		18	70.0	75.0	100.0
		24	70.0	75.0	100.0
		30	70.0	75.0	100.0
42		12	70.0	75.0	100.0
		18	70.0	75.0	100.0
		24	70.0	75.0	100.0
		30	70.0	71.4	100.0

SINGLE ENTRANCE DOORS WITH TRANSOM					
DESIGN LOAD CAPACITY – PSF					
			GLASS TYPES 'A' & 'B'		
			LOCK OPTION 1	LOCK OPTIONS 2 & 3	
NOMINAL DIMS.			LOCK STILE UN-REINFORCED	LOCK STILE UN-REINFORCED	LOCK STILE REINFORCED
DOOR OPNG. WIDTH INCHES	DOOR OPNG. HEIGHT INCHES	TRANSOM HEIGHT INCHES	EXT. (+) INT. (–)	EXT. (+) INT. (–)	EXT. (+) INT. (–)
36	96	12	70.0	75.0	100.0
		18	70.0	75.0	100.0
		24	70.0	75.0	100.0
39		12	70.0	75.0	100.0
		18	70.0	75.0	100.0
		24	70.0	75.0	100.0
42		12	70.0	75.0	100.0
		18	70.0	75.0	100.0
		24	70.0	73.0	100.0
36	102	12	70.0	75.0	100.0
		18	70.0	75.0	100.0
39		12	70.0	75.0	100.0
		18	70.0	75.0	100.0
42		12	70.0	75.0	100.0
		18	70.0	73.9	100.0
36	108	12	70.0	70.0	100.0
39		12	70.0	70.0	100.0
42		12	70.0	70.0	100.0

FOR LOCK OPTION DESCRIPTION SEE SHEET 10.

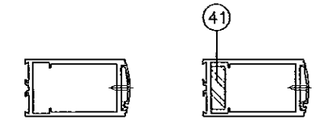

LOCK STILES UN-REINFORCED

LOCK STILES REINFORCED

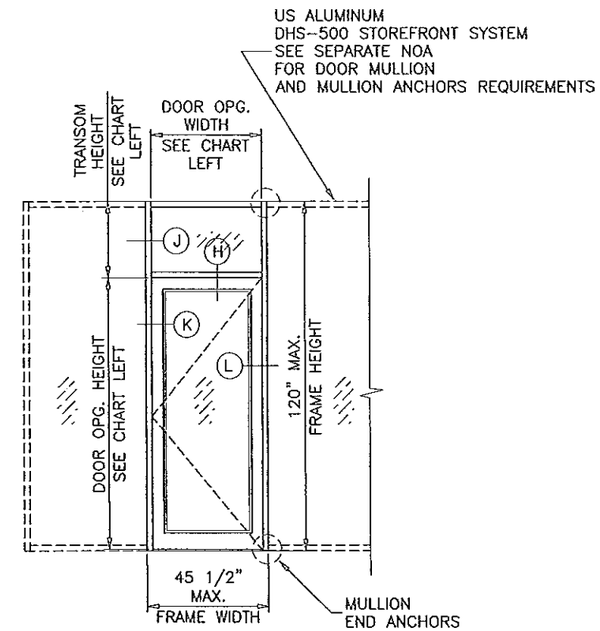

(O/X)

DOOR LEAF WIDTH = DOOR OPNG WIDTH – .250"
DOOR LEAF HEIGHT = DOOR OPNG HEIGHT – .500"
FRAME HEIGHT = DOOR OPNG. HEIGHT + TRANSOM HEIGHT
D.L.O. HEIGHT (TRANSOM) = TRANSOM HEIGHT – 6"

PRODUCT REVISED
in complying with the Florida Building Code
Acceptance No 14-0331.01
Expiration Date 2/10/15
By Miami Dade Product Control

Engr: JAVAD AHMAD
CIVIL
FLA. PE # 70592
C.A.N. 3538

MAR 17 2014

NOTE:
GLASS CAPACITIES ON THIS SHEET ARE BASED ON ASTM E1300-09 (3 SEC. GUSTS) AND FLORIDA BUILDING COMMISSION DECLARATORY STATEMENT DCA05-DEC-219

AL-FAROOQ CORPORATION
ENGINEERS & PRODUCT DEVELOPMENT
1235 S.W. 87 AVE
MIAMI, FLORIDA 33174
TEL. (305) 264-8100 FAX. (305) 262-6978

COMP-ANL\W04-83DD

Series 'DH-350' Aluminum Out-Swing Door (L.M.I.)

US Aluminum
Division Of C.R. Laurence Co., Inc.
7500 N.W. 69TH AVE.
MIAMI, FL 33166
TEL. (305) 888-0077 FAX. (305) 884-3111

revisions:

no	date	by	description
D	10.04.11		GLASS & LOCK OPTIONS ADDED
E	06.21.12		REV. PER PERA COMMENTS
F	08.29.12		REV. PER RER COMMENTS
G	10.03.12		REV. PER RER COMMENTS
H	03.14.14		NO CHANGE THIS SHEET

date: 10-05-04
scale: –
dr. by: HAMID
chk. by:

drawing no.
W04-83

DOUBLE ENTRANCE DOORS WITH TRANSOM

DESIGN LOAD CAPACITY – PSF

NOMINAL DIMS.			GLASS TYPES 'A' & 'B'		
			LOCK OPTION 1	LOCK OPTIONS 2 & 3	
			LOCK STILE UN-REINFORCED	LOCK STILE UN-REINFORCED	LOCK STILE REINFORCED
DOOR OPNG. WIDTH INCHES	DOOR OPNG. HEIGHT INCHES	TRANSOM HEIGHT INCHES	EXT. (+) INT. (–)	EXT. (+) INT. (–)	EXT. (+) INT. (–)
72	80	12	70.0	75.0	100.0
		18	70.0	75.0	100.0
		24	70.0	75.0	100.0
		30	70.0	75.0	100.0
		36	70.0	75.0	100.0
78		12	70.0	75.0	100.0
		18	70.0	75.0	100.0
		24	70.0	75.0	100.0
		30	70.0	75.0	100.0
		36	70.0	75.0	100.0
84		12	70.0	75.0	100.0
		18	70.0	75.0	100.0
		24	70.0	75.0	100.0
		30	70.0	75.0	100.0
		35–3/4	70.0	73.6	100.0
72	84	12	70.0	75.0	100.0
		18	70.0	75.0	100.0
		24	70.0	75.0	100.0
		30	70.0	75.0	100.0
		36	70.0	75.0	100.0
78		12	70.0	75.0	100.0
		18	70.0	75.0	100.0
		24	70.0	75.0	100.0
		30	70.0	75.0	100.0
		36	70.0	75.0	100.0
84		12	70.0	75.0	100.0
		18	70.0	75.0	100.0
		24	70.0	75.0	100.0
		30	70.0	75.0	100.0
		35–3/4	69.6	69.6	100.0
72	90	12	70.0	75.0	100.0
		18	70.0	75.0	100.0
		24	70.0	75.0	100.0
		30	70.0	75.0	100.0
78		12	70.0	75.0	100.0
		18	70.0	75.0	100.0
		24	70.0	75.0	100.0
		30	70.0	75.0	100.0
84		12	70.0	75.0	100.0
		18	70.0	75.0	100.0
		24	70.0	75.0	100.0
		30	70.0	71.4	100.0

DOUBLE ENTRANCE DOORS WITH TRANSOM

DESIGN LOAD CAPACITY – PSF

NOMINAL DIMS.			GLASS TYPES 'A' & 'B'		
			LOCK OPTION 1	LOCK OPTIONS 2 & 3	
			LOCK STILE UN-REINFORCED	LOCK STILE UN-REINFORCED	LOCK STILE REINFORCED
DOOR OPNG. WIDTH INCHES	DOOR OPNG. HEIGHT INCHES	TRANSOM HEIGHT INCHES	EXT. (+) INT. (–)	EXT. (+) INT. (–)	EXT. (+) INT. (–)
72	96	12	70.0	75.0	100.0
		18	70.0	75.0	100.0
		24	70.0	75.0	100.0
78		12	70.0	75.0	100.0
		18	70.0	75.0	100.0
		24	70.0	75.0	100.0
84		12	70.0	75.0	100.0
		18	70.0	75.0	100.0
		24	70.0	73.0	100.0
72	102	12	70.0	75.0	100.0
		18	70.0	75.0	100.0
78		12	70.0	75.0	100.0
		18	70.0	75.0	100.0
84		12	70.0	75.0	100.0
		18	70.0	73.9	100.0
72	108	12	70.0	70.0	100.0
78		12	70.0	70.0	100.0
84		12	70.0	70.0	100.0

FOR LOCK OPTION DESCRIPTION SEE SHEET 10.

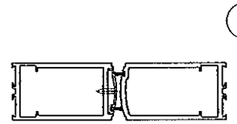

LOCK STILES
UN-REINFORCED

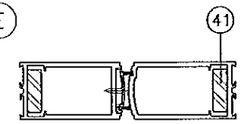

LOCK STILES
REINFORCED

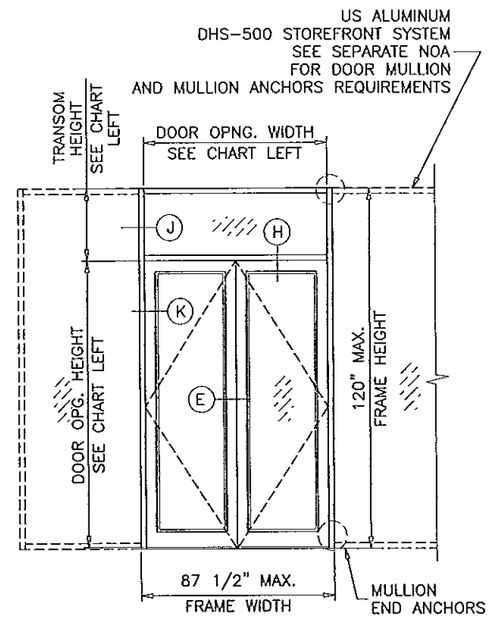

(O/XX)

DOOR LEAF WIDTH = DOOR OPNG WIDTH – .250"
DOOR LEAF HEIGHT = DOOR OPNG HEIGHT – .500"

PRODUCT REVISED
as complying with the Florida Building Code
Acceptance No. 14-0331.01
Expiration Date 2/10/15
By [illegible]
Miami Dade Product Control

Engr: JAVAD AHMAD
CIVIL
FLA. PE # 70592
C.A.N. 3538

MAY 17 2014

NOTE:
GLASS CAPACITIES ON THIS SHEET ARE BASED ON ASTM E1300–09 (3 SEC. GUSTS) AND FLORIDA BUILDING COMMISSION DECLARATORY STATEMENT DCA05–DEC–219

AL-FAROOQ CORPORATION
ENGINEERS & PRODUCT DEVELOPMENT
1235 S.W. 87 AVE
MIAMI, FLORIDA 33174
TEL. (305) 264-8100 FAX. (305) 262-6978
COMP-ANL\W04-83DD

Series 'DH-350' Aluminum Out-Swing Door (L.M.I.)

US Aluminum
Division Of C.R. Laurence Co., Inc.
7500 N.W. 69TH AVE.
MIAMI, FL 33166
TEL. (305) 888-0077 FAX. (305) 884-3111

revisions:

no	date	by	description
D	10.04.11		GLASS & LOCK OPTIONS ADDED
E	06.21.12		REV. PER PERA COMMENTS
F	08.29.12		REV. PER RER COMMENTS
G	10.03.12		REV. PER RER COMMENTS
H	03.14.14		NO CHANGE THIS SHEET

date: 10-05-04
scale: –
dr. by: HAMID
chk. by:

drawing no.
W04-83

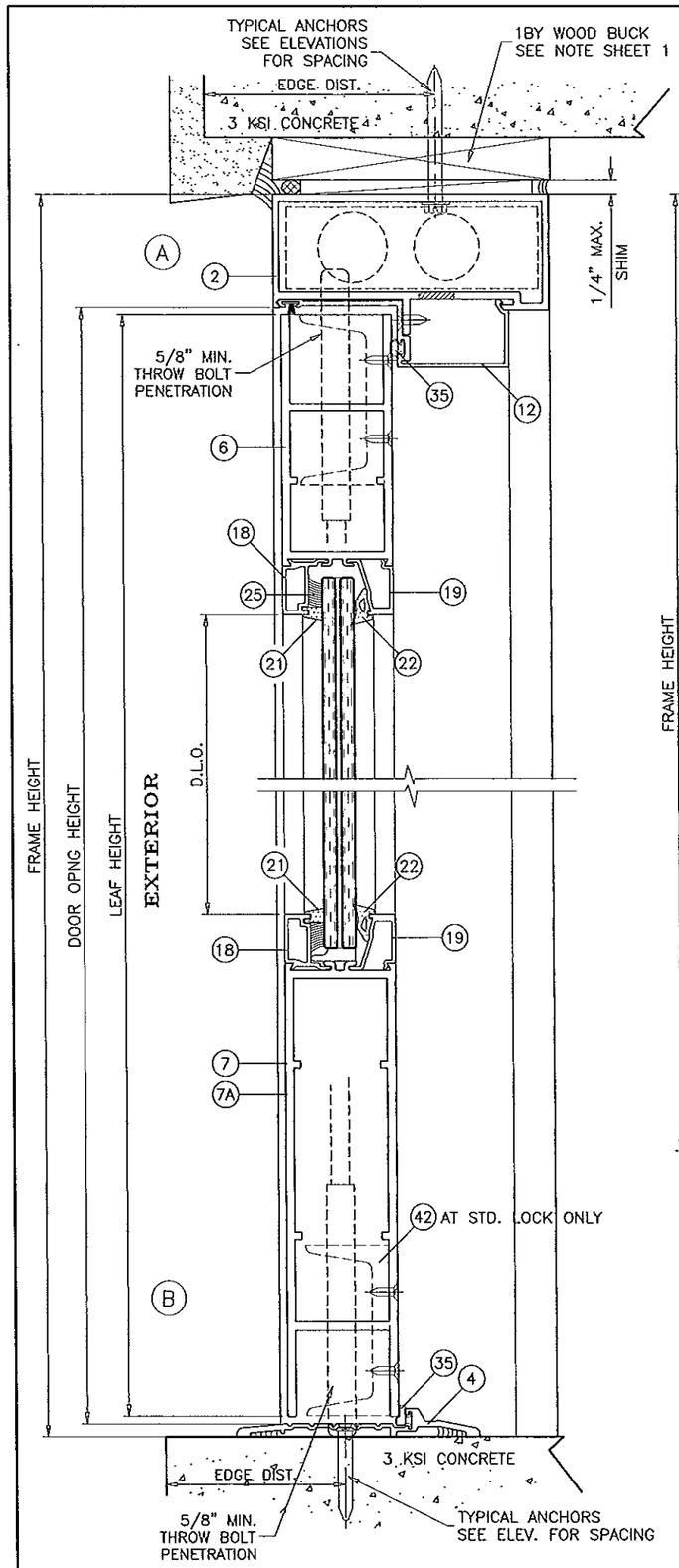

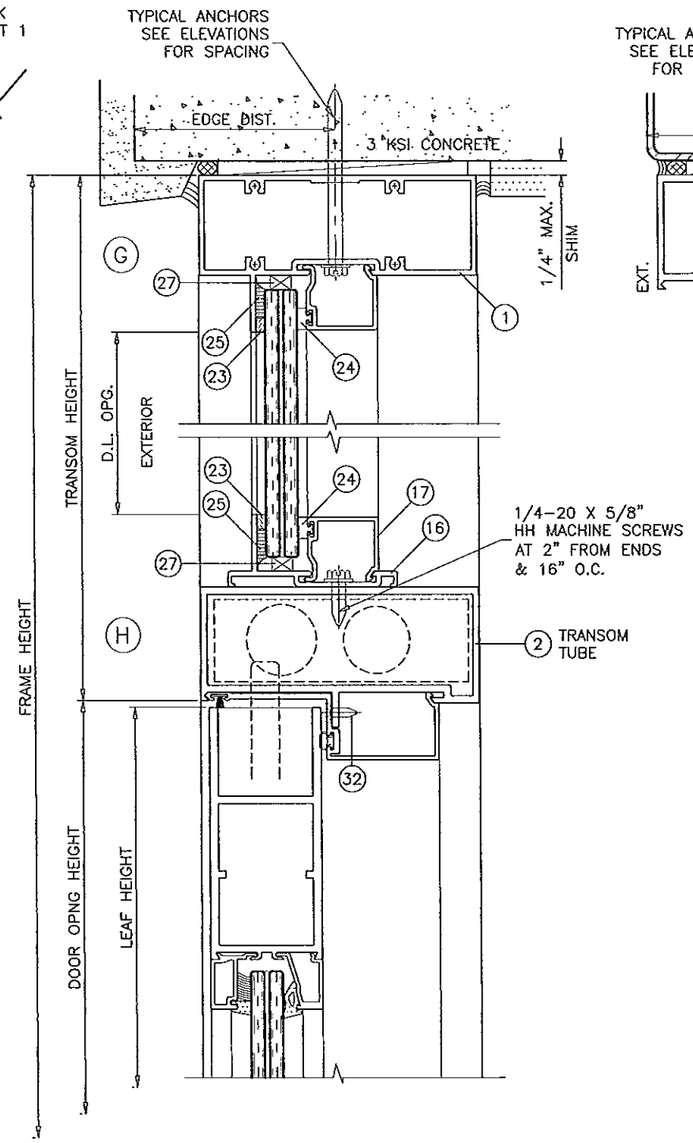

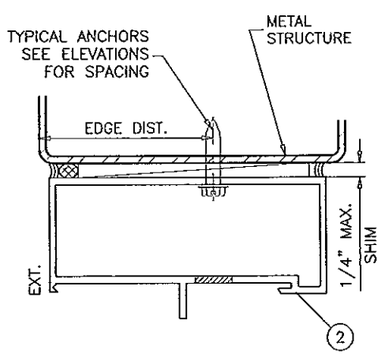

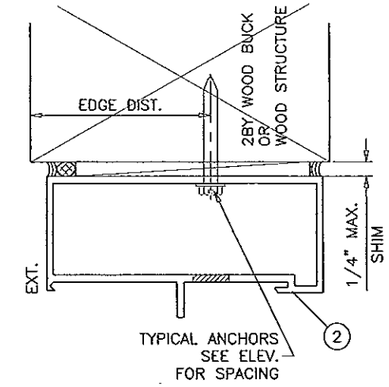

NOTE:

DOOR AND TRANSOM HEAD DETAILS CAN BE INTERCHANGED FOR VARIOUS SUBSTRATES.

WOOD BUCKS AND METAL STRUCTURES NOT BY US ALUMINUM MUST SUPPORT LOADS IMPOSED BY GLAZING SYSTEM AND TRANSFER THEM TO THE BUILDING STRUCTURE.

TYPICAL ANCHORS: SEE ELEV. FOR SPACING

1/4" DIA. ULTRACON BY 'ELCO' (Fu=177 KSI, Fy=155 KSI)

INTO 2BY WOOD BUCKS OR WOOD STRUCTURES
1-1/2" MIN. PENETRATION INTO WOOD

THRU 1BY BUCKS INTO CONC. OR MASONRY
1-1/4" MIN. EMBED INTO CONC. OR MASONRY

DIRECTLY INTO CONC. OR MASONRY
1-3/8" MIN. EMBED INTO CONCRETE
1-1/4" MIN. EMBED INTO MASONRY

#14 SMS OR SELF DRILLING SCREWS (GRADE 2 CRS)

INTO METAL STRUCTURES

STEEL : 12 GA. MIN. (Fy = 36 KSI MIN.)
ALUMINUM : 1/8" THK. MIN. (6063-T5 MIN.)
(STEEL IN CONTACT WITH ALUMINUM TO BE PLATED OR PAINTED)

TYPICAL EDGE DISTANCE

INTO CONCRETE AND MASONRY = 2-1/2" MIN.
INTO WOOD STRUCTURE = 1" MIN.
INTO METAL STRUCTURE = 3/4" MIN.

CONCRETE AT HEAD, SILL OR JAMBS f'c = 3000 PSI MIN.
C-90 HOLLOW/FILLED BLOCK AT JAMBS f'm = 2000 PSI MIN.

SEALANTS:

FRAME CORNERS, ASSEMBLY SCREWS AND HEADS OF ANCHOR SCREWS AT SILL TO BE SEALED WITH SEALER.
LEAF JOINTS SEALED WITH SILICONE.

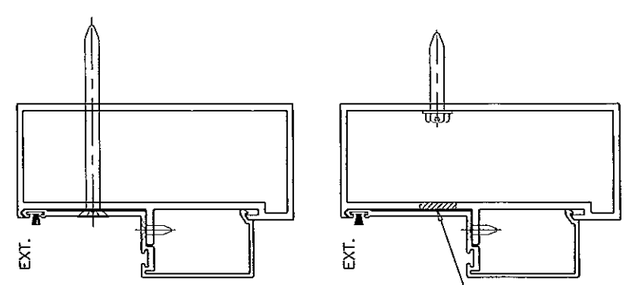

ALTERNATE LOCATION FOR TYPICAL ANCHORS

PRODUCT REVISED
as complying with the Florida Building Code
Acceptance No 14-0331.04
Expiration Date 2/10/15
By Ishaq Ilahi
Miami Dade Product Control

Engr: JAVAD AHMAD
CIVIL
FLA. PE # 70592
C.A.N. 3538

AL-FAROOQ CORPORATION
ENGINEERS & PRODUCT DEVELOPMENT
1235 S.W. 87 AVE
MIAMI, FLORIDA 33174
TEL. (305) 264-8100 FAX. (305) 262-6978

COMP-ANL\W04-83DD

Series 'DH-60' Aluminum Out-Swing Door (L.M.I.)

US Aluminum
Division Of C.R. Laurence Co., Inc.
7500 N.W. 69TH AVE.
MIAMI, FL 33166
TEL. (305) 888-0077 FAX. (305) 884-3111

revisions:

no	date	by	description
D	10.04.11		NO CHANGE THIS SHEET
E	06.21.12		NO CHANGE THIS SHEET
F	08.29.12		REV. PER RER COMMENTS
G	10.03.12		REV. PER RER COMMENTS
H	03.14.14		BOTTOM RAIL OPTION ADDED

date: 10-05-04
scale: 3/8" = 1"
dr. by: HAMID
chk. by:

drawing no.
W04-83

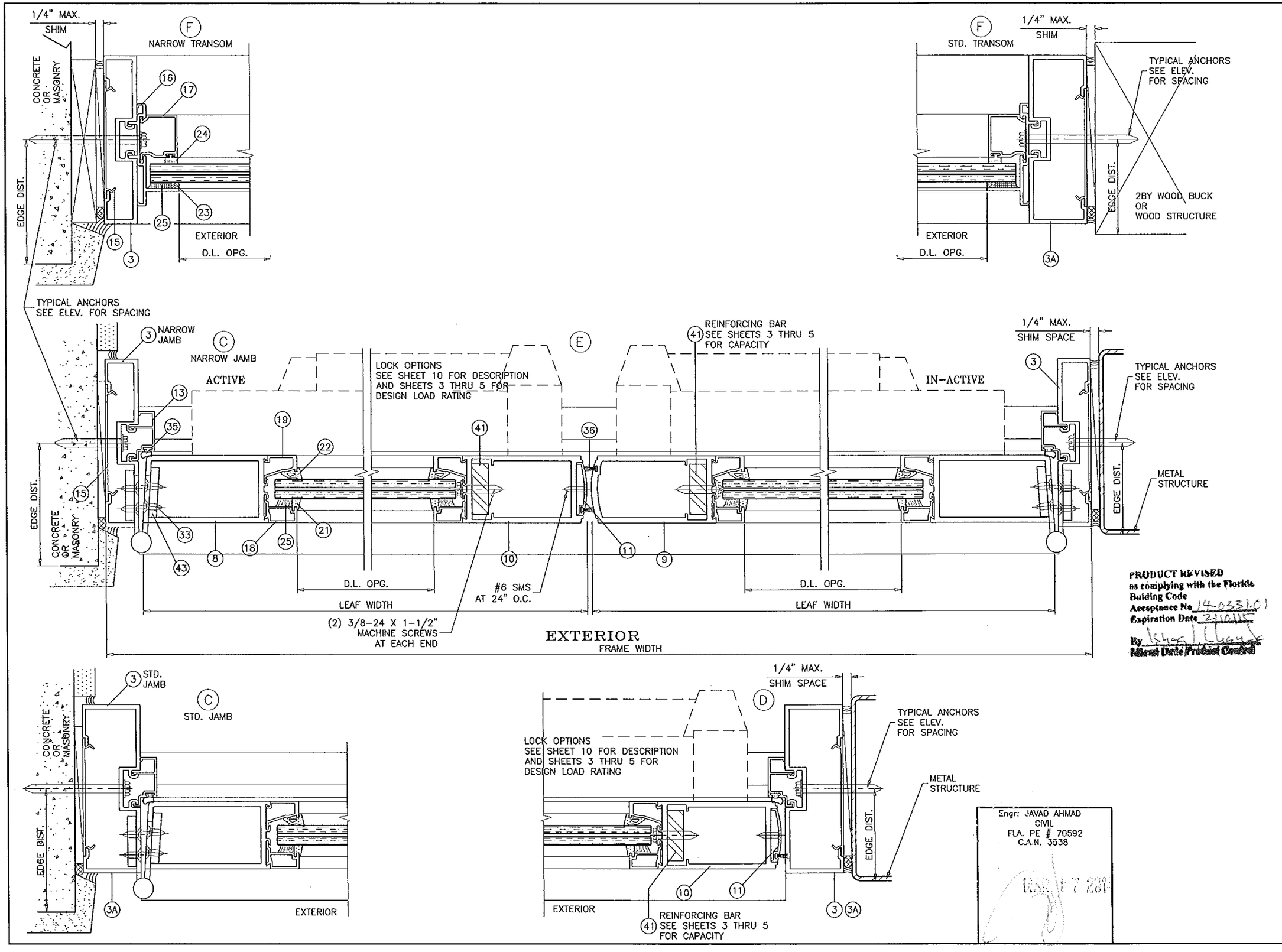

PRODUCT REVISED
as complying with the Florida Building Code
Acceptance No. 14-0331.01
Expiration Date 2/10/15
By [illegible]
Board Date Product Control

Engr: JAVAD AHMAD
CIVIL
FLA. PE # 70592
C.A.N. 3538

AL-FAROOQ CORPORATION
ENGINEERS & PRODUCT DEVELOPMENT
1235 S.W. 87 AVE
MIAMI, FLORIDA 33174
TEL. (305) 264-8100 FAX. (305) 262-6978

COMP-ANL\W04-83DD

Series 'DH-350' Aluminum Out-Swing Door (L.M.I.)

US Aluminum
Division Of C.R. Laurence Co., Inc.
7500 N.W. 69TH AVE.
MIAMI, FL 33166
TEL. (305) 888-0077 FAX. (305) 884-3111

revisions:

no	date	by	description
D	10.04.11		NO CHANGE THIS SHEET
E	06.21.12		REV. PER PERA COMMENTS
F	08.29.12		REV. PER RER COMMENTS
G	10.03.12		NO CHANGE THIS SHEET
H	03.14.14		NO CHANGE THIS SHEET

date: 10-05-04
scale: 3/8" = 1"
dr. by: HAMID
chk. by:

drawing no.
W04-83

sheet 7 of 11

(J)

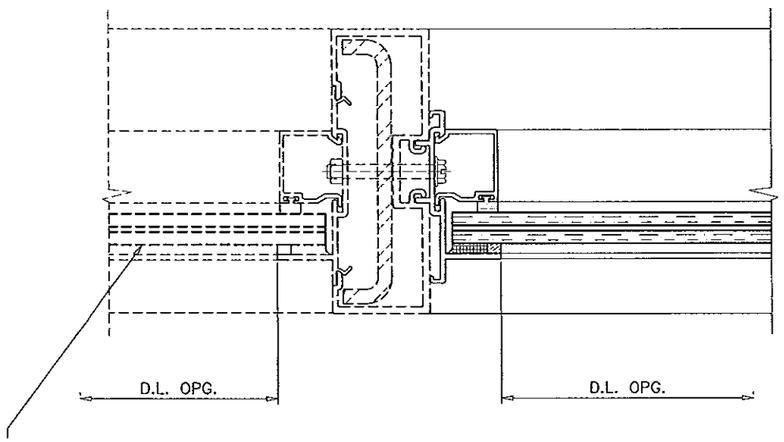

MIAMI–DADE COUNTY APPROVED
DHS–500 STOREFRONT SYSTEM BY 'US ALUMINUM'
UNDER SEPARATE APPROVAL.

LOWER VALUES FROM DOOR CAPACITY CHARTS OR
STOREFRONT NOA WILL APPLY TO ENTIRE SYSTEM.

(K)

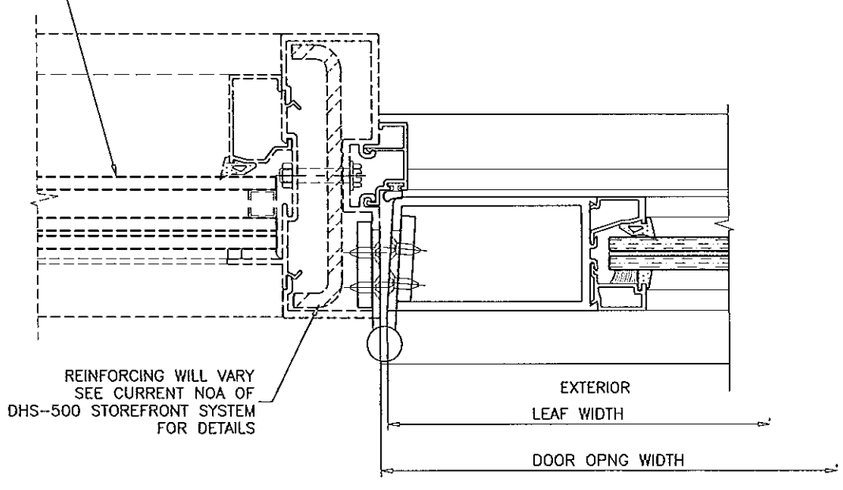

(L)

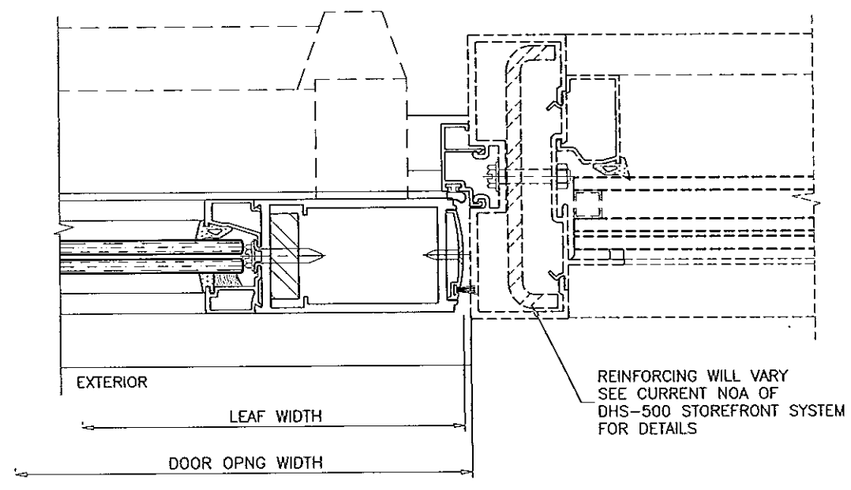

PRODUCT REVISED
as complying with the Florida
Building Code
Acceptance No. 14-0331.01
Expiration Date 2/10/15
By Ishac I. Chaya
Miami Dade Product Control

Engr: JAVAD AHMAD
CIVIL
FLA. PE # 70592
C.A.N. 3538

MAR 17 2014

AL-FAROOQ CORPORATION
ENGINEERS & PRODUCT DEVELOPMENT
1235 S.W. 87 AVE
MIAMI, FLORIDA 33174
TEL (305) 264-8100 FAX. (305) 262-6978

COMP–ANL\W04–83DD

Series 'DH–350' Aluminum Out–Swing Door (L.M.I.)

US Aluminum
Division Of C.R. Laurence Co., Inc.
7500 N.W. 69TH AVE.
MIAMI, FL 33166
TEL. (305) 888–0077 FAX. (305) 884–3111

revisions:

no	date	by	description
F	08.29.12		REV. PER RER COMMENTS
G	10.03.12		REV. PER RER COMMENTS
H	03.14.14		NO CHANGE THIS SHEET

date: 10–05–04
scale: 3/8" = 1"
dr. by: HAMID
chk. by:

drawing no.
W04–83

sheet 8 of 11

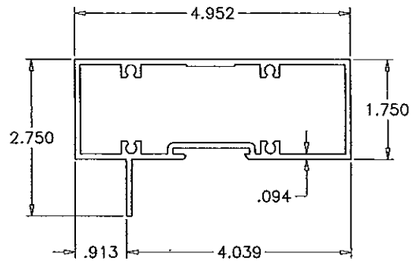

1 TRANSOM HEAD

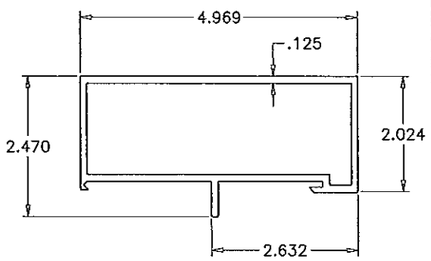

2 DOOR FRAME HEAD
OPTIONAL TRANSOM HEAD

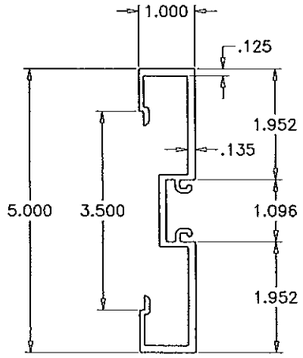

3 NARROW JAMB

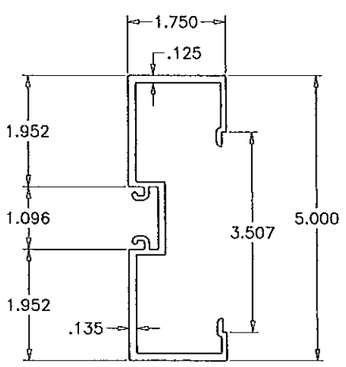

3A STD. JAMB

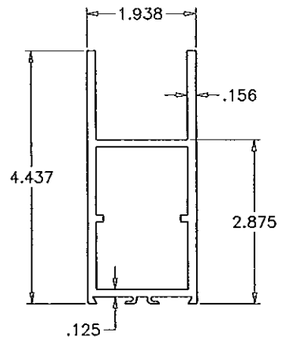

6 TOP RAIL

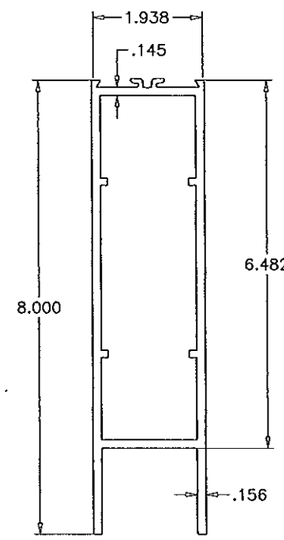

7 8" BOTTOM RAIL

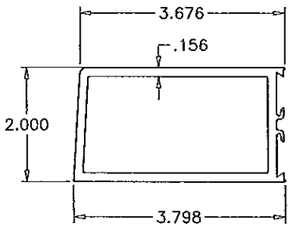

8 HINGE STILE

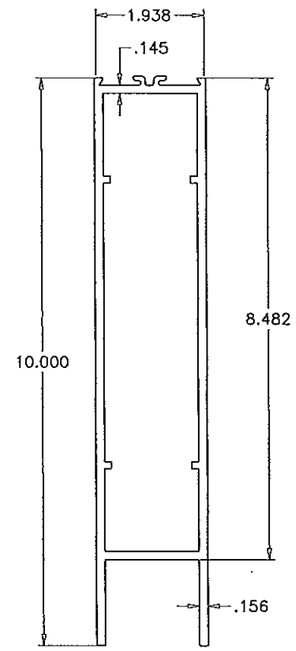

7A 10" BOTTOM RAIL

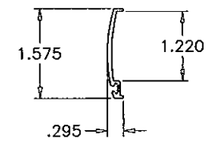

11 LOCK STILE CAP

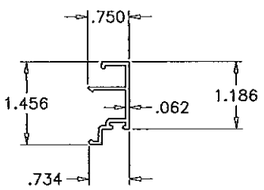

13 DOOR STOP (JAMB)

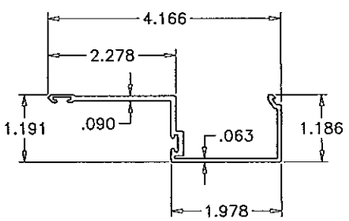

12 DOOR STOP (HEAD)

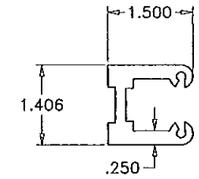

39 SHEAR BLOCK

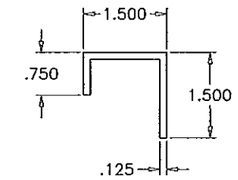

38 SHEAR CLIP

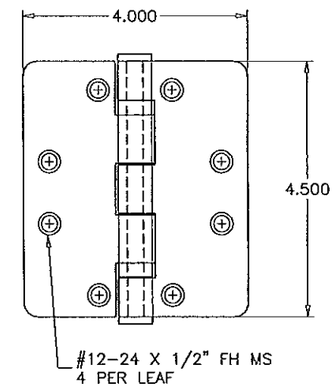

STEEL HINGES
(.130" MIN. THK.)
HAGGER
REGENT
C.R. LAURENCE

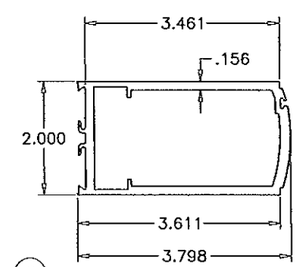

9 LOCK STILE (IN-ACTIVE)

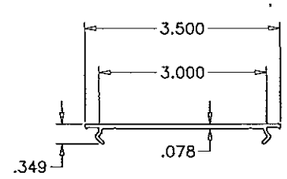

15 FLAT FILLER

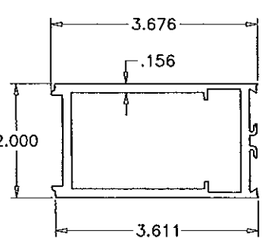

10 LOCK STILE (ACTIVE)

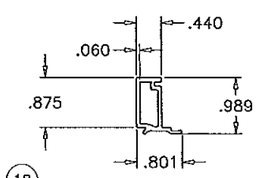

18 EXTERIOR GLASS STOP (DOOR)

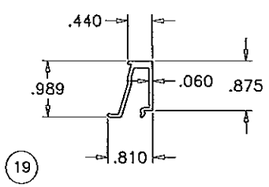

19 INTERIOR GLASS STOP (DOOR)

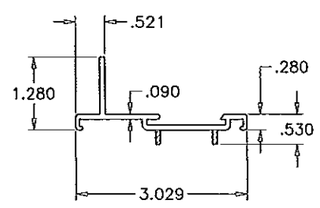

16 GLAZING ADAPTER

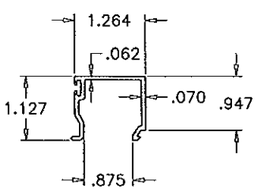

17 INTERIOR GLASS STOP (TRANSOM)

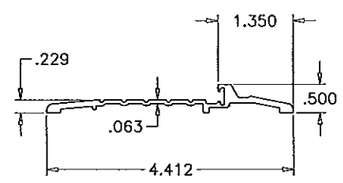

4 BUMPER THRESHOLD

PRODUCT REVISED
as complying with the Florida
Building Code
Acceptance No 14-0331.01
Expiration Date 2/10/15
By
Miami Dade Product Control

Engr: JAVAD AHMAD
CIVIL
FLA. PE # 70592
C.A.N. 3538

MAR 17 2014

AL-FAROOQ CORPORATION
ENGINEERS & PRODUCT DEVELOPMENT
1235 S.W. 87 AVE
MIAMI, FLORIDA 33174
TEL (305) 264-8100 FAX. (305) 262-6978
COMP-ANL\W04-83DD

Series 'DH-350' Aluminum Out-Swing Door (L.M.I.)

US Aluminum
Division Of C.R. Laurence Co., Inc.
7500 N.W. 69TH AVE.
MIAMI, FL 33166
TEL. (305) 888-0077 FAX. (305) 884-3111

revisions:

no	date	by	description
D	10.04.11		NO CHANGE THIS SHEET
E	06.21.12		NO CHANGE THIS SHEET
F	08.29.12		REV. PER RER COMMENTS
G	10.03.12		NO CHANGE THIS SHEET
H	03.14.14		BOTTOM RAIL OPTION ADDED

date: 10-05-04
scale: 3/8" = 1"
dr. by: HAMID
chk. by:

drawing no.
W04-83

LOCK OPTIONS SINGLE DOORS:

OPTION #1: (PANIC HARDWARE)

1490 CONCEALED VERTICAL PANIC EXIT DEVICE WITH
2 POINT LOCK BY DOR-O-MATIC.
KEY OPERATED ON EXTERIOR.
AT 40-1/2" FROM BOTTOM.

OPTION #2: (STANDARD HARDWARE)

3 POINT LOCK SYSTEM WITH 8 PLY MORTISE
HOOK LOCK AND 1/2" DIA. BOLT BY REGENT.
KEY OPERATED ON EXTERIOR AND THUMB TURN
OPERATOR ON INTERIOR.
LOCK AT 42" FROM BOTTOM.
THROW BOLTS AT TOP & BOTTOM.

OPTION #3: (PANIC HARDWARE)

CONCEALED VERTICAL PANIC EXIT DEVICE WITH
2 POINT LOCK BY JACKSON COMMERCIAL HARDWARE
KEY OPERATED ON EXTERIOR.
AT 38-1/2" FROM BOTTOM.

C.R. LAURENCE 8500 LOCKING LEVER TRIM OPTIONAL
WITH 1" MORTISE CYLINDER AND MS TYPE CAM
KEY LOCKING ON EXTERIOR

LOCK OPTIONS DOUBLE DOORS:

OPTION #1: (PANIC HARDWARE)

ACTIVE LEAF:

1490 CONCEALED VERTICAL PANIC EXIT DEVICE WITH
2 POINT LOCK BY DOR-O-MATIC.
KEY OPERATED ON EXTERIOR.
AT 40-1/2" FROM BOTTOM.

INACTIVE LEAF

1490 CONCEALED VERTICAL PANIC EXIT DEVICE WITH
2 POINT LOCK BY DOR-O-MATIC.
AT 40-1/2" FROM BOTTOM.

OPTION #2: (STANDARD HARDWARE)

ACTIVE LEAF:

3 POINT LOCK SYSTEM WITH 8 PLY MORTISE
HOOK LOCK AND 1/2" DIA. BOLT BY REGENT.
KEY OPERATED ON EXTERIOR AND THUMB TURN
OPERATOR ON INTERIOR.
LOCK AT 42" FROM BOTTOM.
THROW BOLTS AT TOP & BOTTOM.

INACTIVE LEAF

2 POINT LOCK SYSTEM WITH
1/2" DIA. BOLT BY REGENT.
THUMB TURN OPERATOR ON INTERIOR AT 42" FROM
BOTTOM.

THROW BOLTS AT TOP & BOTTOM.

OPTION #3: (PANIC HARDWARE)

ACTIVE LEAF:

CONCEALED VERTICAL PANIC EXIT DEVICE WITH
2 POINT LOCK BY JACKSON COMMERCIAL HARDWARE
KEY OPERATED ON EXTERIOR.
AT 38-1/2" FROM BOTTOM.

C.R. LAURENCE 8500 LOCKING LEVER TRIM OPTIONAL
WITH 1" MORTISE CYLINDER AND MS TYPE CAM
KEY LOCKING ON EXTERIOR

INACTIVE LEAF

CONCEALED VERTICAL PANIC EXIT DEVICE WITH
2 POINT LOCK BY JACKSON COMMERCIAL HARDWARE
AT 38-1/2" FROM BOTTOM.

ITEM #	PART #	REQD.	DESCRIPTION	MATERIAL	MANF./SUPPLIER/REMARKS
1	DLD-103	AS REQD.	TRANSOM HEAD	6063-T6	–
2	DLD-105	1	DOOR FRAME HEAD OR OPTIONAL TRANSOM HEAD	6005-T5	–
3	DLD-119	2/DOOR	FRAME JAMB	6063-T6	–
3A	DLD-124	2/DOOR	ALT. FRAME JAMB	6063-T6	–
4	DLD-111	1	FRAME SILL	6063-T6	–
6	DLD-107	1/ LEAF	TOP RAIL	6063-T5	–
7	DLD-110	1/ LEAF	8" BOTTOM RAIL	6063-T5	–
7A	DLD-141	1/ LEAF	10" BOTTOM RAIL	6063-T5	–
8	DLD-114	1/ LEAF	HINGE STILE	6063-T5	–
9	DLD-115	1/ LEAF	LOCK STILE (IN-ACTIVE)	6063-T5	–
10	DLD-116	1/ LEAF	LOCK STILE (ACTIVE)	6063-T5	–
11	DLD-117	1	CAP AT LOCKED STILE	6063-T5	–
12	DLD-106	1	DOOR STOP AT HEAD	6063-T5	–
13	BCE-460	2/ DOOR	DOOR STOP AT JAMB	6063-T5	–
15	BCE-475	AS REQD.	FLAT FILLER	6063-T6	–
16	DLD-125	AS REQD.	TRANSOM GLAZING ADAPTOR	6063-T6	–
17	DLD-102	AS REQD.	INTERIOR GLASS STOP TRANSOM	6063-T5	–
18	DLD-108	4/ LEAF	EXTERIOR GLASS STOP DOOR	6063-T5	–
19	DLD-109	4/ LEAF	INTERIOR GLASS STOP DOOR	6063-T5	–
21	–	AS REQD.	INTERIOR GASKET	EPDM	TR-5796W, DUROMETER 70±5
22	–	AS REQD.	EXTERIOR GASKET	EPDM	TR-3235E, DUROMETER 60±5
23	2100	AS REQD.	GLAZING TAPE	–	–
24	GG-75	AS REQD.	INTERIOR SPACER	–	IMPACT SYS.
25	DOW 995	AS REQD.	GLAZING COMPOUND	SILICONE	DOW 995
27	1350	AS REQD.	SETTING BLOCK	–	–
29	#12 X 1-1/4"	AS REQD.	FRAME ASSEMBLY SCREWS	–	P.H. SMS
30	#12 X 1-3/4"	AS REQD.	FRAME ASSEMBLY SCREWS	–	F.H. SMS
31	1/4-20 X 5/8"	AS REQD.	FRAME ASSEMBLY SCREWS	–	H.H. MACHINE SCREWS
32	10-24 X 1/2"	4/ LEAF	DOOR STOP SCREWS	–	F.H. MACHINE SCREWS
33	12-24 X 1/2"	4/ HASP	HINGE INSTALLATION SCREWS	–	F.H. MACHINE SCREWS
35	E236	–	BULB WEATHERSTRIPPING POLYPROPILENE BASE, TPE BULB	–	ULTRAFAB BASE DURO 90, BULB DURO 73
36	T4216-K	–	PILE WITH FIN WEATHERSTRIPPING	–	ULTRAFAB
38	–	–	SHEAR CLIP, 4-1/2" LONG	ALUMINUM	–
39	DH-4	–	SHEAR BLOCK	6063-T5	–
40	–	2	3 X 2 X 1/8" ANGLE, 1-3/4" LONG	ALUMINUM	–
41	–	AS REQD.	REINFORCING BAR, FULL LENGTH	STEEL	1-1/2" X 1/2"
42	–	2/ LEAF	FLUSH BOLT GUIDE CHANNEL	ALUMINUM	3" LONG
43	–	2/ HINGE	HINGE REINFORCING PLATES	ALUMINUM	1-1/2" X 1/4" X 8" LONG

HINGES:

4-1/2 X 4" TWO PIECE STEEL BUTT HINGES BY HAGGER, REGENT OR C.R. LAURENCE
AT 8" FROM TOP AND BOTTOM AND 31" O.C. MAX.

PRODUCT REVISED
as complying with the Florida
Building Code
Acceptance No. 14-0331.01
Expiration Date 2/10/15
By [illegible]
Miami Dade Product Control

Engr: JAVAD AHMAD
CIVIL
FLA. PE # 70592
C.A.N. 3538

AL-FAROOQ CORPORATION
ENGINEERS & PRODUCT DEVELOPMENT
1235 S.W. 87 AVE
MIAMI, FLORIDA 33174
TEL. (305) 264-8100 FAX. (305) 262-6978
COMP-ANL\W04-83DD

Series 'DH-350' Aluminum Out-Swing Door (L.M.I.)

US Aluminum
Division Of C.R. Laurence Co., Inc.
7500 N.W. 69TH AVE.
MIAMI, FL 33166
TEL. (305) 888-0077 FAX. (305) 884-3111

revisions:

no	date	by	description
D	10.04.11		LOCK OPTION ADDED
E	06.21.12		NO CHANGE THIS SHEET
F	08.29.12		REV. PER RER COMMENTS
G	10.03.12		NO CHANGE THIS SHEET
H	03.14.14		BOTTOM RAIL OPTION ADDED

date: 10-05-04
scale: 3/8" = 1"
dr. by: HAMID
chk. by:

drawing no.
W04-83

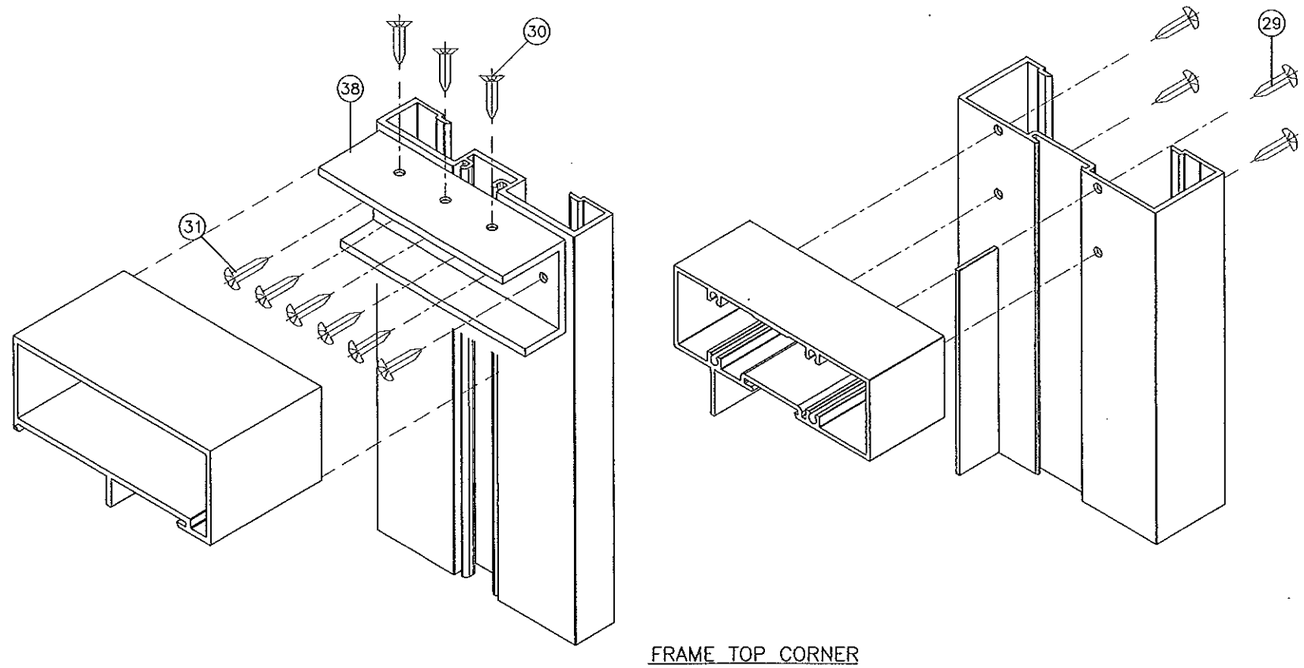

FRAME TOP CORNER

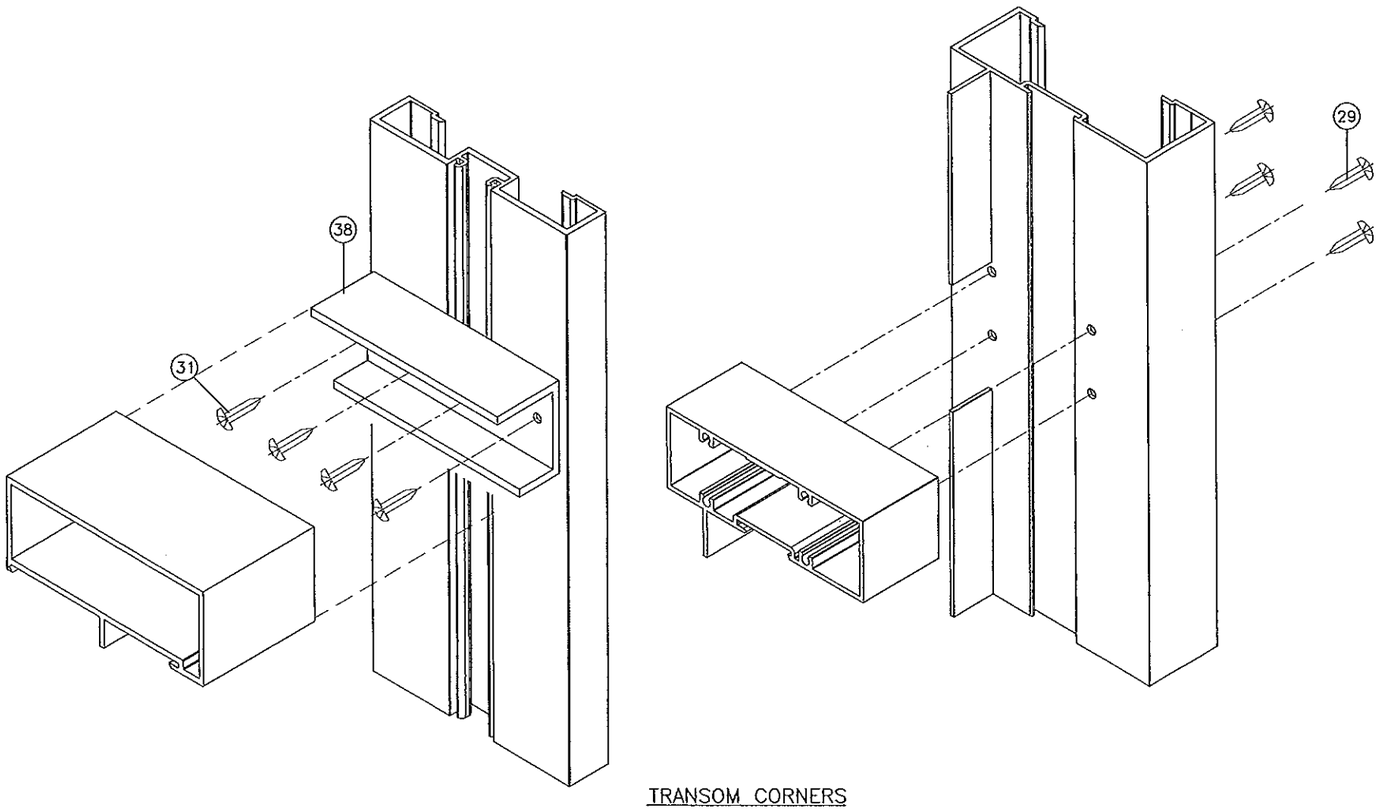

TRANSOM CORNERS

PRODUCT REVISED
in complying with the Florida
Building Code
Acceptance No 14-0331.01
Expiration Date 2/10/15
By [illegible]
Miami Dade Product Control

Engr: JAVAD AHMAD
CIVIL
FLA. PE # 70592
C.A.N. 3538

MAR 17 2014

AL-FAROOQ CORPORATION
ENGINEERS & PRODUCT DEVELOPMENT
1235 S.W. 87 AVE
MIAMI, FLORIDA 33174
TEL. (305) 264-8100 FAX. (305) 262-6978

COMP-ANL\W04-83DD

Series 'DH-350' Aluminum Out-Swing Door (L.M.I.)

US Aluminum
Division Of C.R. Laurence Co., Inc.
7500 N.W. 69TH AVE.
MIAMI, FL 33166
TEL. (305) 888-0077 FAX. (305) 884-3111

revisions:

no	date	by	description
D	10.04.11		NO CHANGE THIS SHEET
E	06.21.12		NO CHANGE THIS SHEET
F	08.29.12		REV. PER RER COMMENTS
G	10.03.12		REV. PER RER COMMENTS
H	03.14.14		NO CHANGE THIS SHEET

date: 10-05-04
scale: 3/8" = 1"
dr. by: HAMID
chk. by:

drawing no.
W04-83

sheet 11 of 11

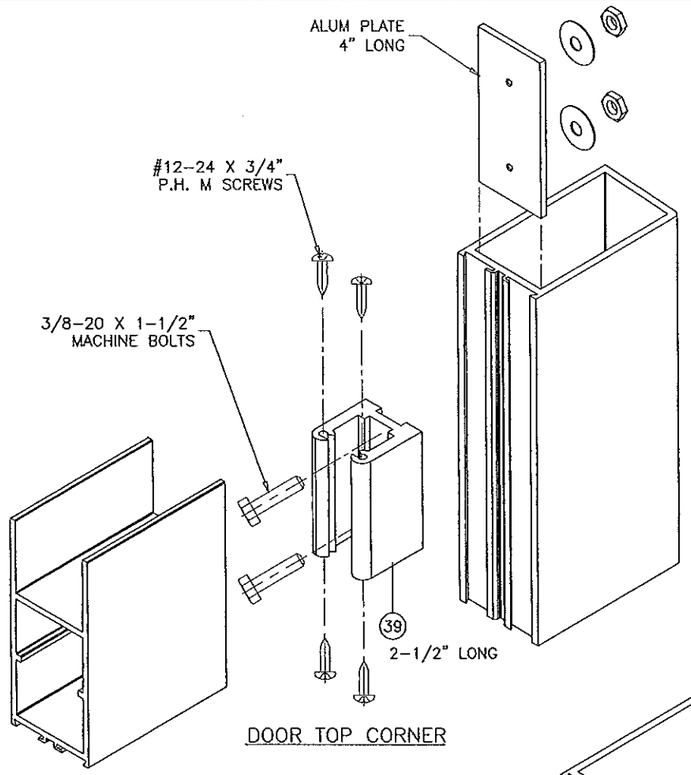

DOOR TOP CORNER

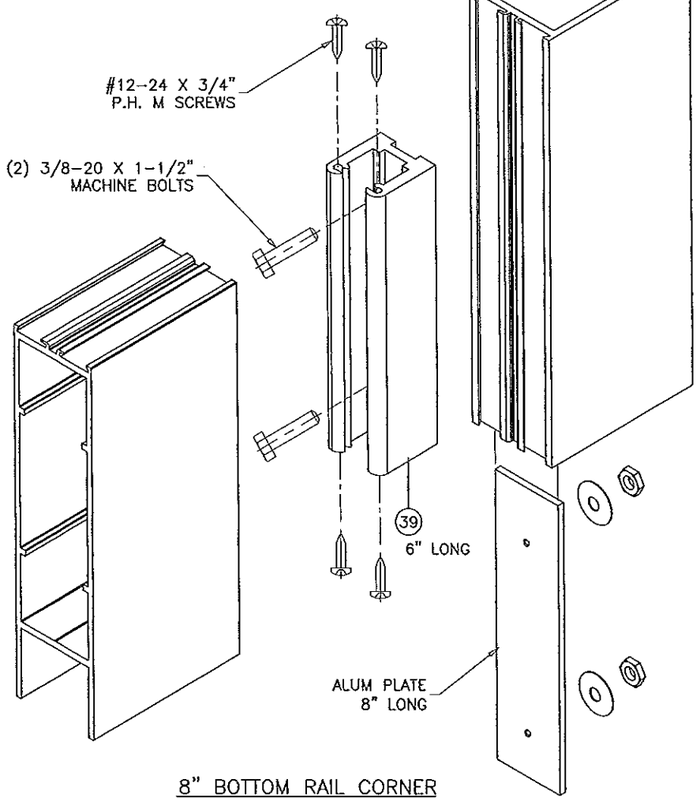

8" BOTTOM RAIL CORNER

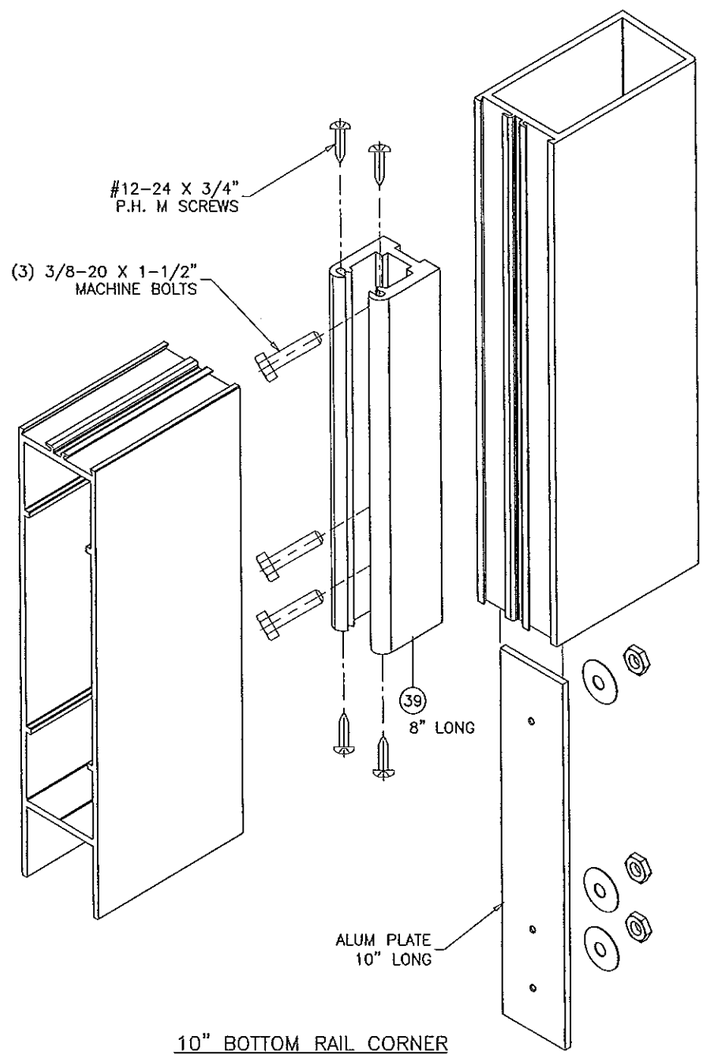

10" BOTTOM RAIL CORNER

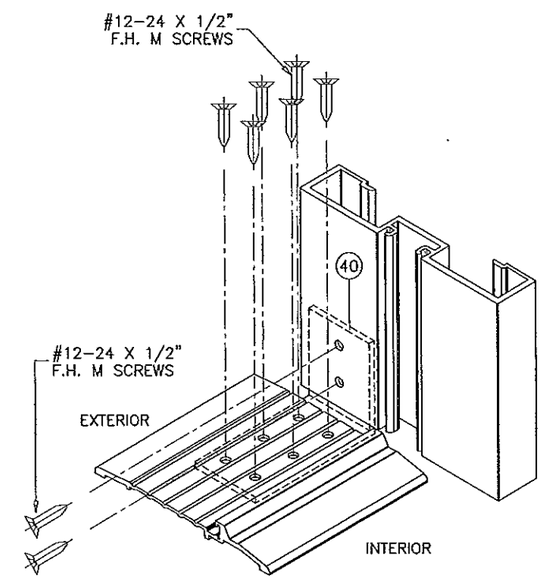

FRAME BOTTOM CORNER

PRODUCT REVIEWED
as complying with the Florida
Building Code
Acceptance No. 14-0331.01
Expiration Date FEB 10 2015
By [signature]
Miami Dade Product Control

Engr: JAVAD AHMAD
CML
FLA. PE # 70592
C.A.N. 3538

[signature] 2014

AL-FAROOQ CORPORATION
ENGINEERS & PRODUCT DEVELOPMENT
1235 S.W. 87 AVE
MIAMI, FLORIDA 33174
TEL. (305) 264-8100 FAX. (305) 262-6978
COMP-ANL\W04-83DD

Series 'DH-350' Aluminum Out-Swing Door (L.M.I.)

US Aluminum
Division Of C.R. Laurence Co., Inc.
7500 N.W. 69TH AVE.
MIAMI, FL 33166
TEL. (305) 888-0077 FAX. (305) 884-3111

revisions:

no	date	by	description
G	10.03.12		REV PER RER COMMENTS
H	03.14.14		NO CHANGE THIS SHEET

date: 10-05-04
scale: 3/8" = 1"
dr. by: HAMID
chk. by:

drawing no.
W04-83

sheet 11.1 of 11