MIAMI-DADE COUNTY
PRODUCT CONTROL SECTION
11805 SW 26 Street, Room 208
Miami, Florida 33175-2474
T (786) 315-2590 F (786) 315-2599
www.miamidade.gov/economy

DEPARTMENT OF REGULATORY AND ECONOMIC RESOURCES (RER)
BOARD AND CODE ADMINISTRATION DIVISION

NOTICE OF ACCEPTANCE (NOA)

Horton Automatics Division of Overhead Door
4242 Baldwin Boulevard
Corpus Christi, TX 78405

SCOPE:

This NOA is being issued under the applicable rules and regulations governing the use of construction materials. The documentation submitted has been reviewed and accepted by Miami-Dade County RER -Product Control Section to be used in Miami Dade County and other areas where allowed by the Authority Having Jurisdiction (AHJ).

This NOA shall not be valid after the expiration date stated below. The Miami-Dade County Product Control Section (In Miami Dade County) and/or the AHJ (in areas other than Miami Dade County) reserve the right to have this product or material tested for quality assurance purposes. If this product or material fails to perform in the accepted manner, the manufacturer will incur the expense of such testing and the AHJ may immediately revoke, modify, or suspend the use of such product or material within their jurisdiction. RER reserves the right to revoke this acceptance, if it is determined by Miami-Dade County Product Control Section that this product or material fails to meet the requirements of the applicable building code.

This product is approved as described herein, and has been designed to comply with the Florida Building Code, including the High Velocity Hurricane Zone.

DESCRIPTION: Series "310 " (So-Sx-Sx-So) and (So-Sx) Aluminum Automatic Sliding Door (Steel Reinforced) w/ Full Emergency Breakout

APPROVAL DOCUMENT: Drawing No. **021913 Rev 9**, titled "Series 310 Impact Slide", sheets 1 through 7 of 7, prepared by manufacturer, dated 07/05/12 and last revised on 03/18/14, signed and sealed by John E. Scates, P.E., bearing the Miami-Dade County Product Control Revision stamp with the Notice of Acceptance number and expiration date by the Miami-Dade County Product Control Section.

MISSILE IMPACT RATING: Large and Small Missile Impact Resistant

Limitations:

1. See Design Pressure (**DP**) in sheet 1. Bi-parting Sliding doors (**So-Sx-Sx-So**) are rated to DP= **+/-85** PSF and **Single** Slide doors (**So-Sx**) are limited to DP=+/- **70** PSF. Locking options can be w/ 3-point locking (detail in sheet 5) **or** AR G-86 panic device w/ concealed vertical rods (details in sheet 7).
2. Not approved where water infiltration is required.
3. Electrical/ Electronic functions are not part of this approval and to be reviewed by appropriate Bldg. official.
4. See sheet 2 for max DLO for Muntin options.

LABELING: Each unit shall bear a permanent label with the manufacturer's name or logo, city, state and series and following statement: "Miami-Dade County Product Control Approved", noted herein.

RENEWAL of this NOA shall be considered after a renewal application has been filed and there has been no change in the applicable building code negatively affecting the performance of this product.

TERMINATION of this NOA will occur after the expiration date or if there has been a revision or change in the materials, use, and/or manufacture of the product or process. Misuse of this NOA as an endorsement of any product, for sales, advertising or any other purposes shall automatically terminate this NOA. Failure to comply with any section of this NOA shall be cause for termination and removal of NOA.

ADVERTISEMENT: The NOA number preceded by the words Miami-Dade County, Florida, and followed by the expiration date may be displayed in advertising literature. If any portion of the NOA is displayed, then it shall be done in its entirety.

INSPECTION: A copy of this entire NOA shall be provided to the user by the manufacturer or its distributors and shall be available for inspection at the job site at the request of the Building Official.

This NOA **revises & supersedes # 13-0321.12**, consists of this page 1 and evidence pages E-1, as well as approval document mentioned above.

The submitted documentation was reviewed by **Ishaq I. Chanda, P.E.**

MIAMI-DADE COUNTY APPROVED

5/20/14

NOTICE OF ACCEPTANCE: EVIDENCE SUBMITTED

A. DRAWINGS

1. Manufacturer's die drawings and sections (Submitted under file # **13-0321.12**).
2. Drawing No. **021913 Rev 9**, titled "Series 310 Impact Slide", sheets 1 through 7 of 7, prepared by manufacturer, dated 07/05/12 and last revised on 03/18/14, signed and sealed by John E. Scates, P.E.

Note: This revision consists of corrections of Design Pressure table in sheet 1.

B. TESTS (Submitted under file # **13-0321.12**)

1. Test reports on: 1) Air Infiltration Test, per FBC, TAS 202-94
   2) Uniform Static Air Pressure Test, Loading per FBC TAS 202-94
   3) Water Resistance Test, per FBC, TAS 202-94 (Not conducted)
   4) Large Missile Impact Test per FBC, TAS 201-94
   5) Cyclic Wind Pressure Loading per FBC, TAS 203-94
   6) Forced Entry Test, per FBC 2411 3.2.1, TAS 202-94

along with installation diagram of an aluminum automatic sliding glass doors So-Sx-Sx-So and So-Sx, prepared by Architectural Testing, Test Report No. **B-3974-450-18**, dated 02/07/13 and revised on 07/17/2013 by an addendum letter, signed and sealed by Vinu Abraham, P.E.

C. CALCULATIONS (Submitted under file # **13-0321.12**)

1. Anchor verification calculations and structural analysis complying w/ FBC 2010, dated 06/10/13, prepared, signed and sealed by John E. Scates, P.E.
2. Glazing complies w/ ASTME-1300-02 & -04

D. QUALITY ASSURANCE

1. Miami Dade Department of Regulatory and Economic Resources (RER).

E. MATERIAL CERTIFICATIONS

1. Notice of Acceptance No. **12-1231.08** issued to Eastman Chemical Co. (MA) former Solutia, Inc. for their "**Saflex-CP** Saflex HP Composite Glass ® interlayer w/ **PET core**", expiring on 12/11/2018.
2. Notice of Acceptance No. **11-0624.02** issued to E.I. DuPont DeNemours & Co., Inc. for their "**DuPont Sentry Glass ® interlayer**", expiring on 01/14/17.

F. STATEMENTS

1. Statement letter of conformance to FBC 2010 & "No financial interest", dated 05/20/14, signed & sealed by John E. Scates, P.E.
2. Addendum letter dated 07-17-13, issued by Architectural Testing lab, signed and sealed by Vinu Abraham, P. E.
3. Lab compliance as part of the above referenced test report.

G. OTHER

1. This NOA **revises & supersedes #13-0321.12,** expiring 10/10/18.
2. Test proposal # 11-128-R dated January 20th, 2012, approved by RER.

Ishaq I. Chanda, P.E.
Product Control Examiner
NOA No. 14-0408.04
Expiration Date: October 10, 2018
Approval Date: May 29, 2014

NOTE:
For fastener location and type see sheets 3 & 4
The 1.6 wind load allowance was used in the wood anchor calculations

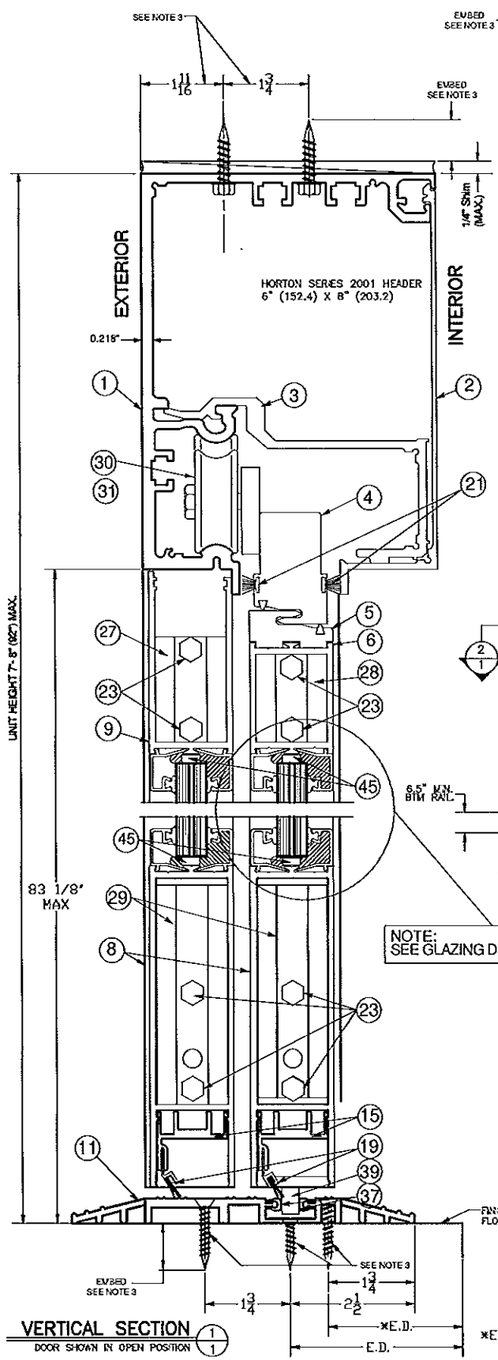

VERTICAL SECTION (1/1)
DOOR SHOWN IN OPEN POSITION

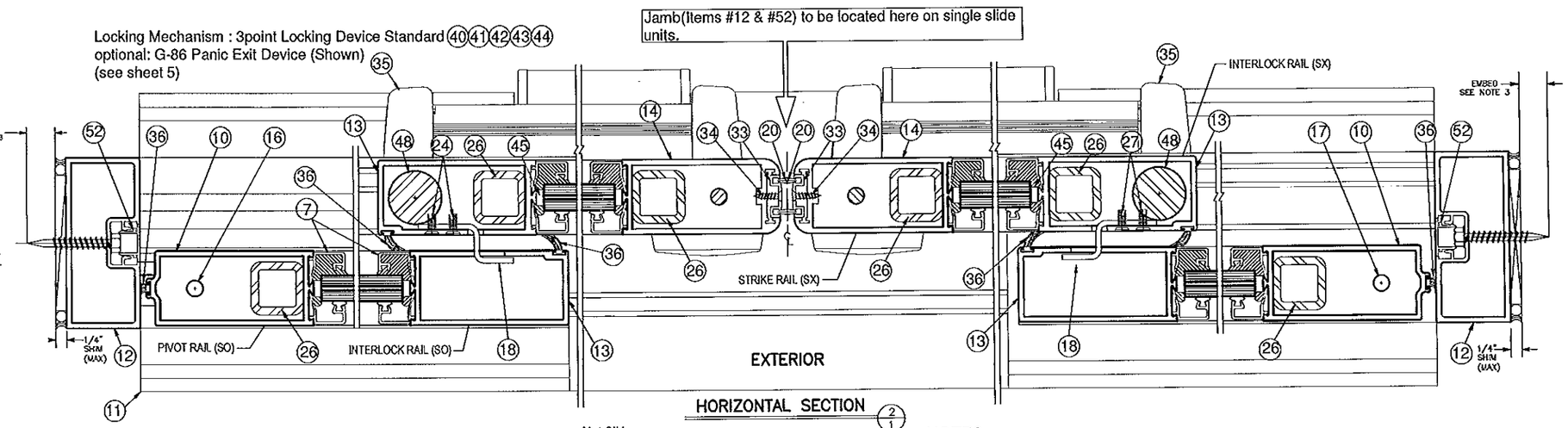

HORIZONTAL SECTION (2/1)

Available Unit Sizes:

	Panel Width nom. door	Net Slide opening
9'-0"W X 7'-8"H Max size (SO-SX or SX-SO)	1@55-1/2"=55-1/2"	46 1/2"
14'-0"W X 7'-8"H Max size (SO-SX-SX-SO)	2@43-3/4"=87-1/2"	69 1/2"

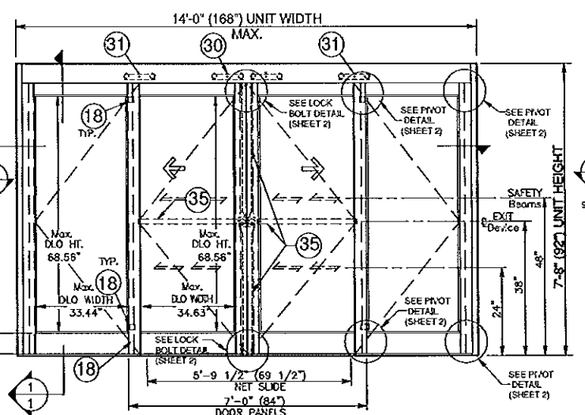

EXTERIOR ELEVATION (4/1)
(SO-SX-SX-SO)

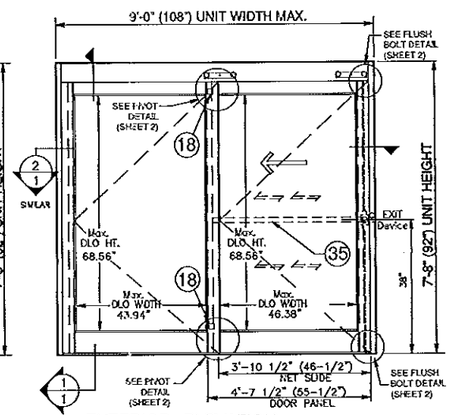

EXTERIOR ELEVATION (6/1)
(SO-SX) SHOWN, & (SX-SO)

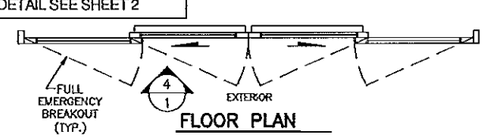

FLOOR PLAN (4/1)

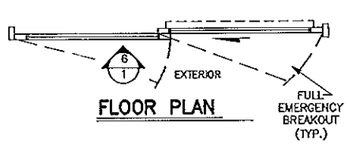

FLOOR PLAN (6/1)

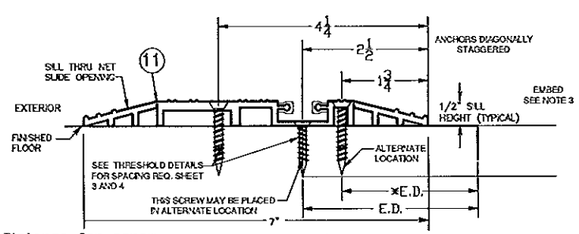

*E.D. = Edge Distance for screw at alternate location.

THRESHOLD DETAIL

NOTE:
SEE GLAZING DETAIL SEE SHEET 2

NOTES:
1. This product has been designed and tested to comply with the current Florida Building Code, including High Velocity Hurricane Zone (HVHZ).
2. Electrical/Electronic functions are not part of this approval and must be reviewed by appropriate building official.
3. See anchor installation details concerning types, substrate, edge distance, spacing and embedment on sheets 3 & 4.
4. 1x or 2x wood bucks by others must be secured properly to transfer loads using appropriate fasteners and quantities. Fasteners to secure wood buck must penetrate concrete or grouted CMU jamb substrate minimum 2.0" at head and sill.
5. Permit holder shall verify the adequacy of the existing structure to withstand additional imposed loads.
6. 1/4" max shim allowed. Type of shim to comply with Florida Building Code and be capable of resisting frame rotation.
7. All structural extrusions are 6063-T5 Aluminum with typical thickness of 1/8", unless otherwise specified.

Bi - Parting Slide Doors	
Where Water Infiltration Requirement is needed	Where Water Infiltration Requirement is NOT needed
Not Approved	± 85 PSF

Single Slide Doors	
Where Water Infiltration Requirement is needed	Where Water Infiltration Requirement is NOT needed
Not Approved	± 70 PSF

14' x 7'-8"(168" X 92") (SO-SX-SX-SO) &
9' x 7'-8" (108" X 92") (SO-SX) or (SX-SO)
W/ AR G-86 Panic Exit Device & Concealed Rod
(See Sheet 7)
3 - Point Lock Option
(See Sheet 5)

Series 310 Impact Slide

JOHN E. SCATES
3121 FAIRGATE DR.
CARROLLTON, TX 75007
FL PE 51737

JOHN E. SCATES 7/18/14

JOHN E. SCATES LICENSE No. 51737 STATE OF FLORIDA PROFESSIONAL ENGINEER

PRODUCT REVISED
to complying with the Florida Building Code
Acceptance No. 14-0408.04
Expiration Date OCT 10, 2018
By
Product Control

NO.	REVISIONS DESCRIPTION	DATE
2	Updated Lock ECO 16111	10-2-12
3	Updated Lock ECO 16146	10-26-12
4	Updated Dwgs ECO 16395	04/23/13
5	Updated Drawings ECO 16488	07/18/13
6	Updated Drawings ECO 16509	08/6/13
7	Updated Drawings ECO 16535	08/23/13
8	Updated Drawings ECO 16572	09/30/13
9	Updated Drawings ECO 16731	3-13-14

ARCHITECT:
CONTRACTOR:
SERIES: 310 TYPE: "SO-SX-SX-SO", "SO-SX" & "SX-SO"
STILE: MEDIUM FINISH:
ACTUATION:

Bi Part Section Details
Dwg. No. 021913

Horton AUTOMATICS
A DIVISION OF OVERHEAD DOOR CORP.
4242 BALDWIN BOULEVARD
CORPUS CHRISTI, TEXAS 78405-3399
361-888-5591 1-800-531-3111
FAX: 361-888-6510, 1-800-531-3108

JOB: METRO-DADE
LOCATION:
DISTRIBUTOR:
DWN: MJ P.O. # SHEET 1 of 7
CHK: C.TANDELL DATE 7-5-12 REVISION 9

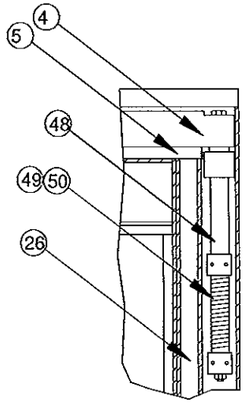

"SX" PANEL
TOP PIVOT

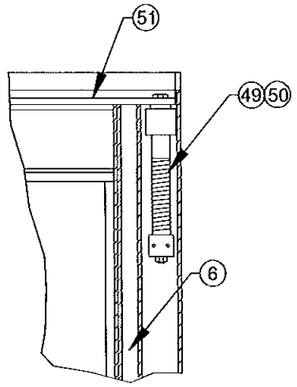

"SO" PANEL
TOP PIVOT

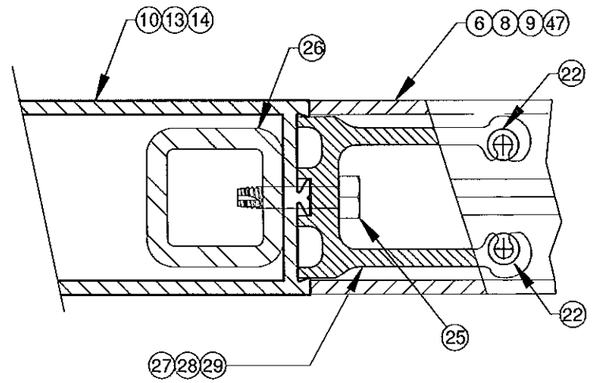

CONNECTION BLOCK
WITH REINFORCEMENT

STRIKE RAIL (SX)
INTERLOCK RAIL (SX)
PIVOT RAIL (SO)

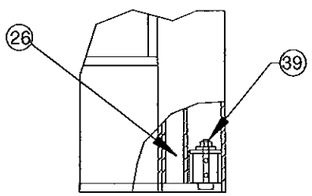

"SX" PANEL
BTM. PIVOT

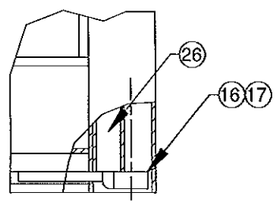

"SO" PANEL
BTM. PIVOT

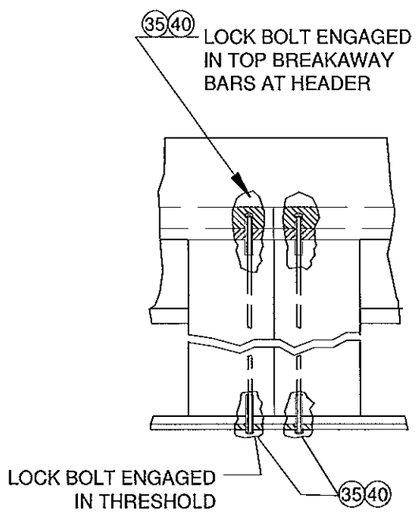

LOCK BOLT DETAIL

G-86 & 3-POINT LOCK

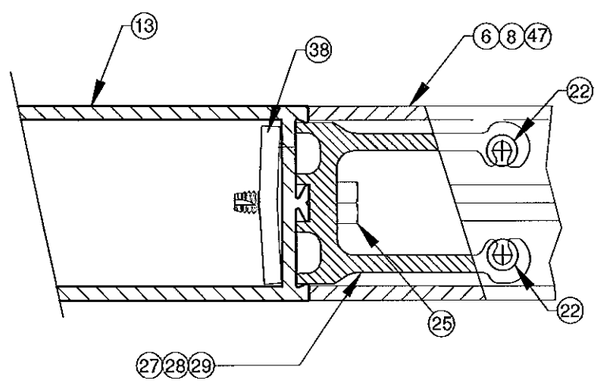

CONNECTION BLOCK
WITH BACK UP PLATE

INTERLOCK RAIL (SO) ONLY

* 9/16" thick (nominal) Laminated Glass consisting of the following components:
  * Saflex CP: Composite glass interlay w/ PET core by Eastman Chemical Co. (MA)

  OR .090" Sentry Glass interlayer by Dupont
  * 1/4" heat strengthened glass
  * Dow Corning #995 Sealant

* Interior wet glazed with Dow Corning 995
* Exterior side snap-in glazing bead with vinyl wedge
* Minimum glass bite 9/16"

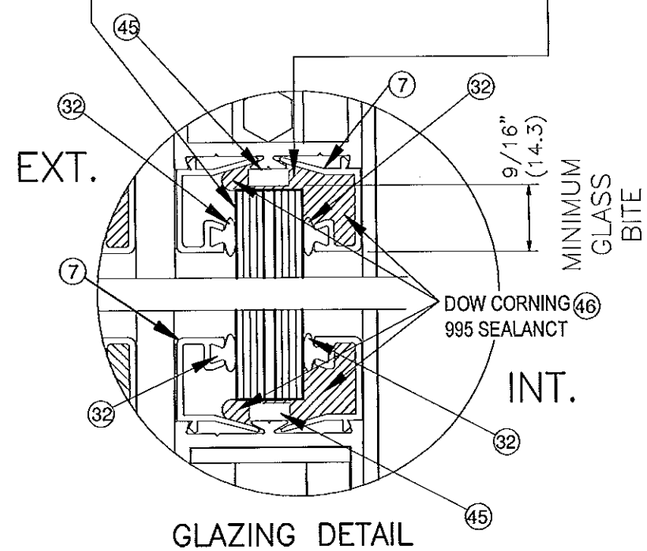

GLAZING DETAIL

SANTOPRENE GASKET (ITEM 32) MIN 67
SHORE A DUROMETER FROM CENTRAL
PLASTICS INC.

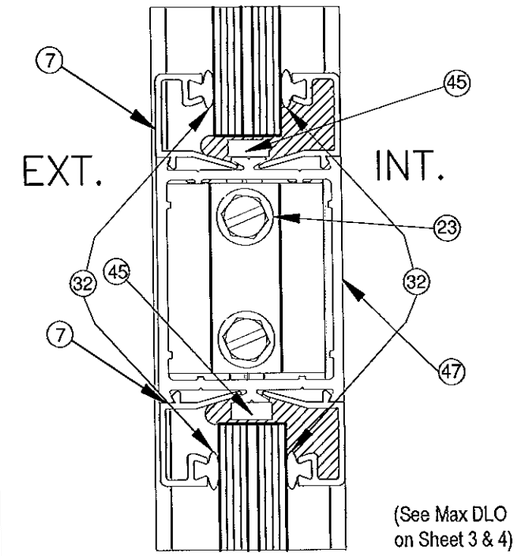

(See Max DLO
on Sheet 3 & 4)

MUNTIN OPTION

WEATHERSEALS:

C715 INTERLOCK SEAL	SCHLEGEL CORP. FINSEAL #7595-6011-0
C350 NOSING SEAL	SCHLEGEL CORP. SKIRTING SEAL #1104-5101
C524-FL SIDE PANEL BOTTOM SEAL	FELTON NYLON BRISTLE #490621

HARDWARE:

C883 THRESHOLD/HEADER BOLT	ADAMS-RITE #4015
C815-RFL, C817-FL, C2130-1FL	SIDE TOP ROLLER ASSEMBLIES
C852-4 BOTTOM GUIDES	

Series 310 Impact Slide

NO.	REVISIONS DESCRIPTION	DATE
2	Updated Lock ECO 16111	10-2-12
3	Updated Dwgs ECO 16146	10-26-12
4	Updated Dwgs ECO 16355	04/29/13
5	Updated Drawings ECO 16488	07/18/13
6	Updated Drawings ECO 16509	08/6/13
7	Updated Drawings ECO 16535	08/23/13
8	Updated Drawings ECO 16572	09/30/13
9	Updated Drawings ECO 16572	03-13-14

ARCHITECT:
CONTRACTOR:
SERIES: 310 TYPE:
STILE: MEDIUM FINISH:
ACTUATION:

Misc. Details
Dwg. No. 021913

Horton AUTOMATICS
A DIVISION OF OVERHEAD DOOR CORP.
4242 BALDWIN BOULEVARD
CORPUS CHRISTI, TEXAS 78405-3399
361-888-5591 1-800-531-3111
FAX: 361-888-6510, 1-800-531-3108

JOB: METRO-DADE
LOCATION:
DISTRIBUTOR:
DWN: MJ P.O. # SHEET 2 of 7
CHK: CVANDELL DATE 7-6-12 REVISION 9

JOHN E. SCATES
3121 FAIRGATE DR.
CARROLLTON, TX 75007
FL PE 51737

John E Scates 9/18/14

JOHN E. SCATES
LICENSE
No. 51737
STATE OF
FLORIDA
PROFESSIONAL ENGINEER

PRODUCT REVISED
to complying with the Florida
Building Code
Acceptance No. 14-0408.04
Expiration Date 12/10/18
Miami-Dade Product Control

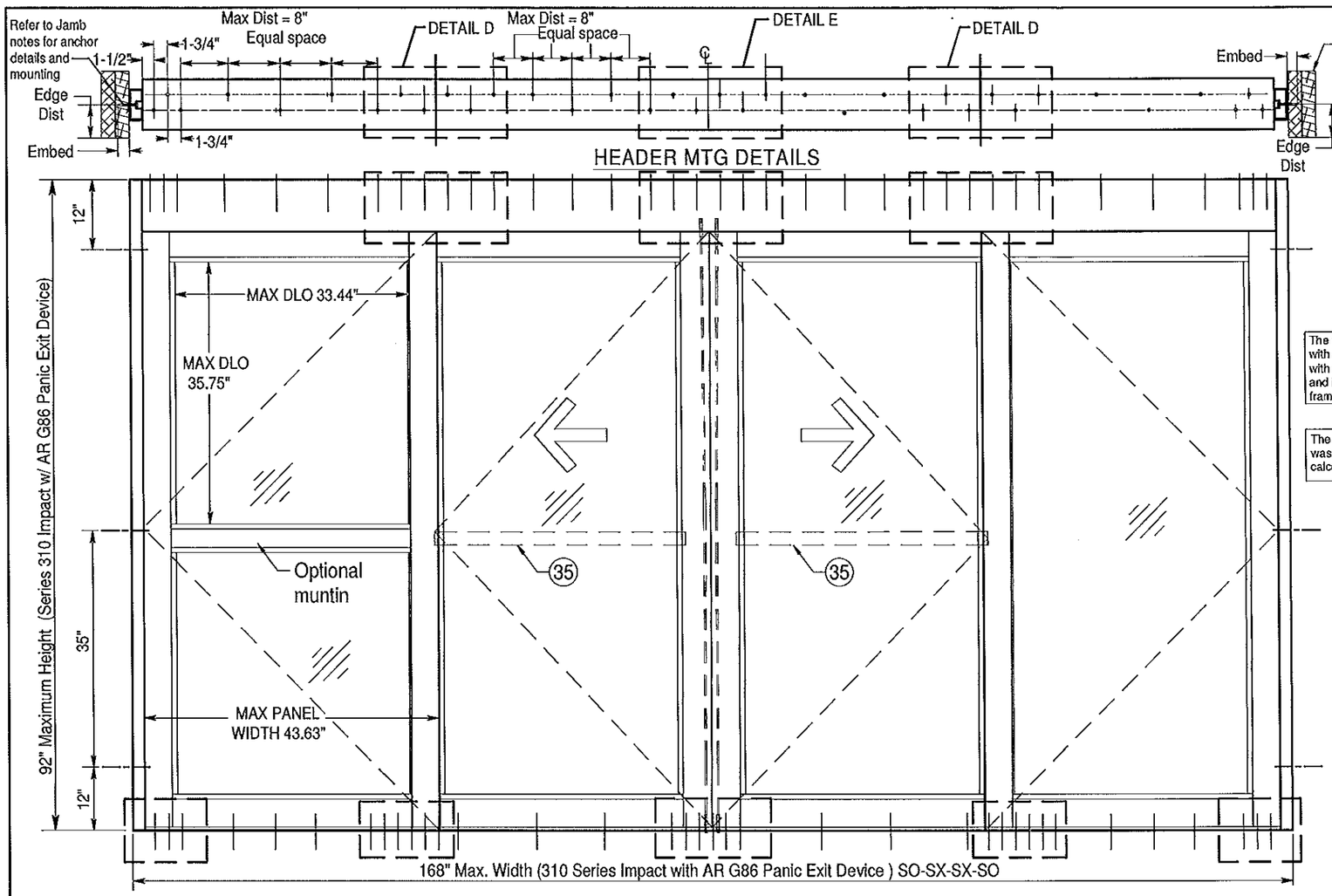

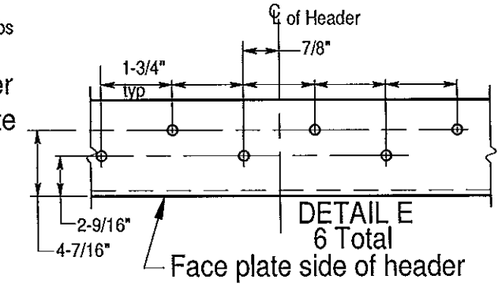

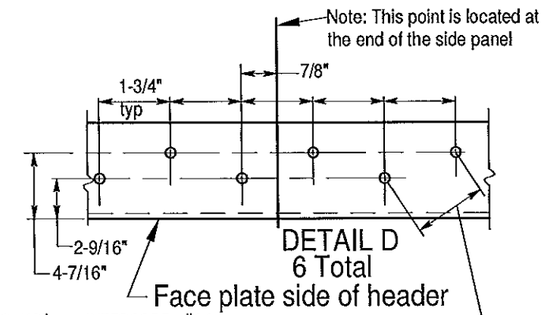

The frame must be shimmed with a type of shim complying with the Florida Building Code and is capable of resisting the frame's rotation-1/4" thk. Max

The 1.6 wind load allowance was used in the wood anchor calculations.

HEADER

Steel (1/8" Thick, Fy=36 KSI) – INTERCORP #14 Steel HWH Self–Drilling Screw (Grade 5), 0.625" Min. Edge Distance. (Full Thread Engagement)

Aluminum(0.125" Thick Min./6063–T5) – 1/4"–14 HWH Sheetmetal Screw (Grade 5), 1" Min. Edge Distance. (Full Thread Engagement)

JAMBS

Steel (1/8" Thick, Fy=36 KSI) – ITW TEKS SCREW (Grade 5) #14–20, FH w/WINGS Self–Drilling Screw 0.625" Minimum Edge Distance (Full Thread Engoement)

Concrete(3192 PSI) – BUILDEX TAPCON 1/4" FH Concrete Screw/Anchor, 2.0" Embed, 2.5" Min. Edge Distance

Masonry(Solid CMU ASTM C–90 Block) – BUILDEX TAPCON 1/4" FH Concrete Screw/Anchor, 2.0" Embed, 2.5" Min. Edge Distance

Aluminum(0.125" Thick Minimum/6063–T5) – 1/4"–14 FH Sheetmetal Screw (Grade 5), 1" Min. Edge Distance. (Full Thread Engagement)

Wood(#2 SYP)–#14 x 4" Long Woodscrew 2.75" Minimum Penetrotion, 1" Minimum Edge Distance. Minimum Buck (2) 2X8 W/Min G = .55.

THRESHOLD

Steel (1/8" Thick, Fy=36 KSI)– ITW TEKS SCREW #14–20 PFH w/Wings Self–Drilling Screw (Grade 5), 0.625" Minimum Edge Distance (Full Thread Engagement)

Concrete(3192 PSI)– BUILDEX TAPCON FH 1/4" Concrete Screw 2.0" Embed, 2.5" Minimum Edge Distance from substrate

Aluminum(0.125" Thick Minimum/6063–T5) – 1/4"–14 FH Sheetmetal Screw (Grade 5), 1" Minimum Edge Distance (Full Tread Engagement)

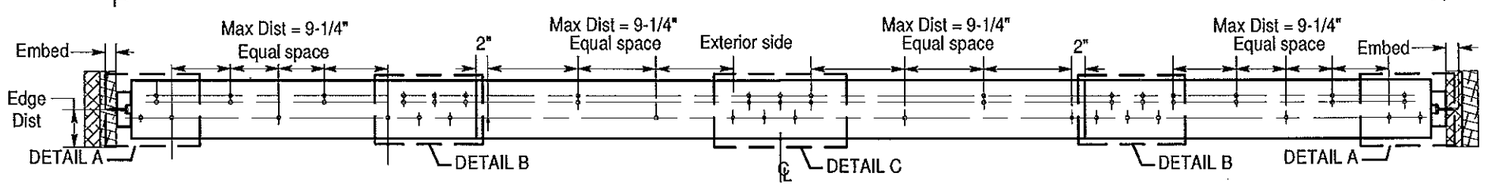

THRESHOLD DETAILS

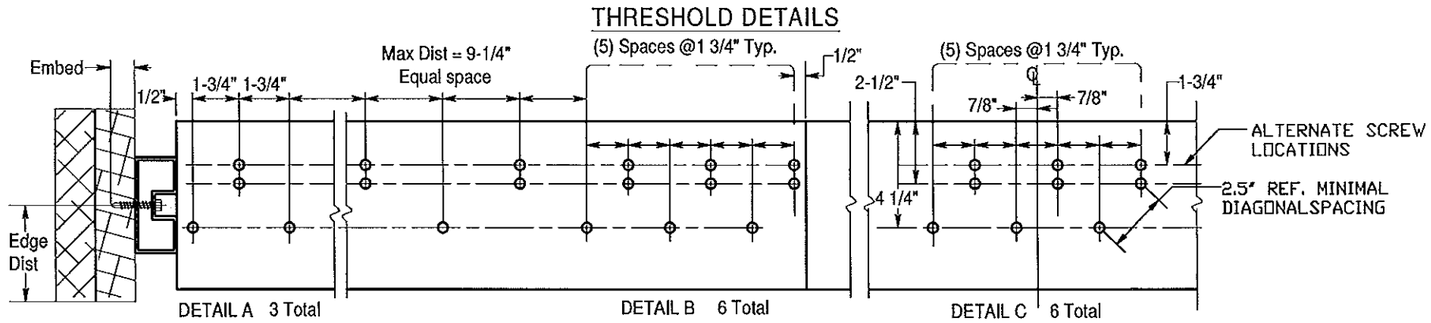

Series 310 Bi-Parts Impact Slide Fastener Locations

JOHN E. SCATES
3121 FAIRGATE DR.
CARROLLTON, TX 75007
FL PE 51737

John E Scates 3/14/14

JOHN E. SCATES LICENSE No. 51737 STATE OF FLORIDA PROFESSIONAL ENGINEER

PRODUCT REVIEWED as complying with the Florida Building Code
Acceptance No 14-0418.04
Expiration Date 10/10/18
By
Based Daily Product Control

NO.	REVISIONS DESCRIPTION	DATE
2	Updated Lock ECO 15111	10–2–12
3	Updated Lock ECO 15146	10–26–12
4	Updated Dwgs ECO 16395	04/29/13
5	Updated Drawings ECO 16488	07/18/13
6	Updated Drawings ECO 16509	08/6/13
7	Updated Drawings ECO 16535	08/23/13
8	Updated Drawings ECO 16572	09/30/13
9	Updated Drawings ECO 16734	3–13–14

ARCHITECT:
CONTRACTOR:
SERIES: 310 TYPE: "S0-SX-SX-S0"
STILE: MEDIUM FINISH:
ACTUATION:

Bi-Part Fastener Locations
Dwg. No. 021913

Horton AUTOMATICS
A DIVISION OF OVERHEAD DOOR CORP.
4242 BALDWIN BOULEVARD
CORPUS CHRISTI, TEXAS 78405-3399
361-888-5591 1-800-531-3111
FAX: 361-888-6510, 1-800-531-3108

JOB METRO–DADE
LOCATION:
DISTRIBUTOR:
DWN: MJ P.O. # SHEET 3 of 7
CHK: C.MANDELL DATE: 7–5–12 REVISION 9

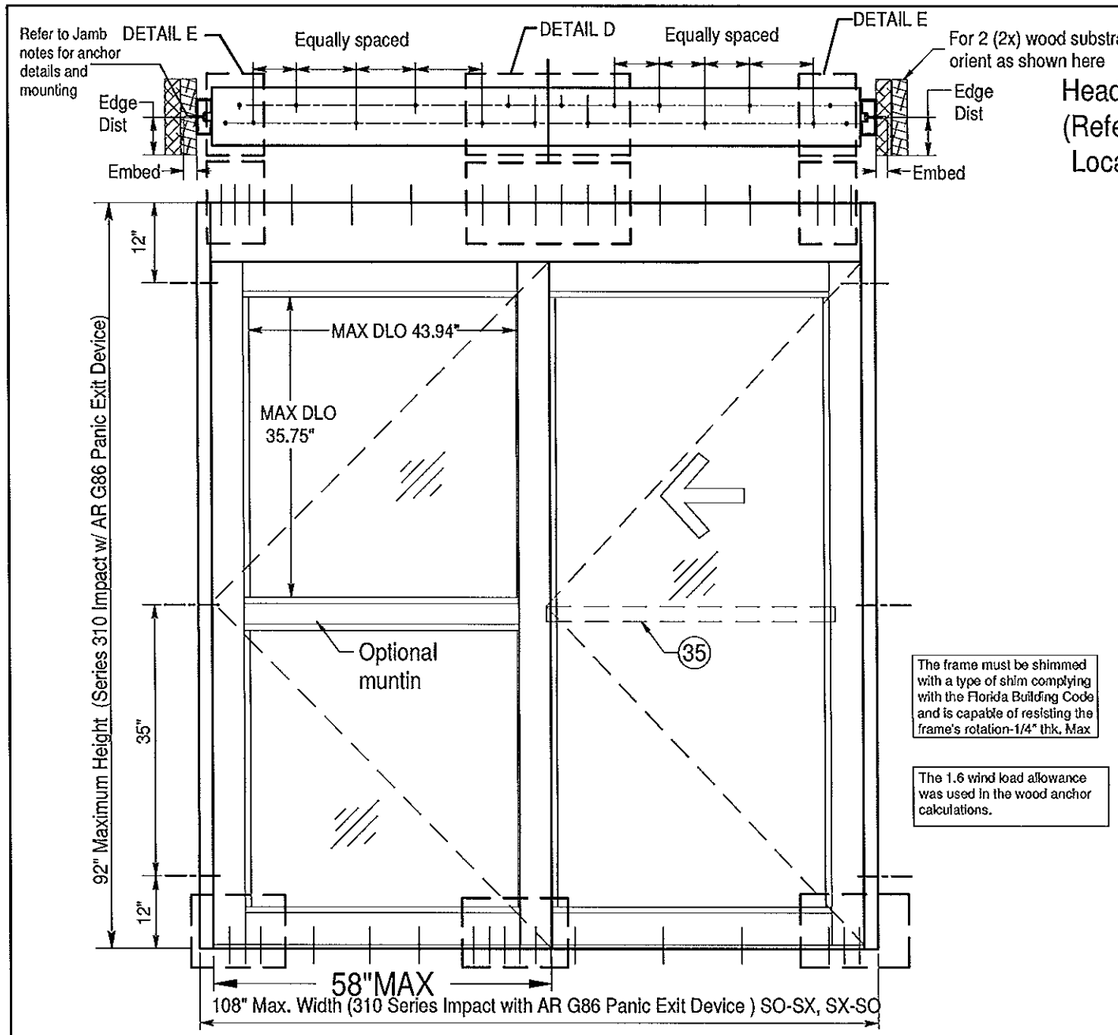

Header Details
(Refer to Faceplate Location)

The frame must be shimmed with a type of shim complying with the Florida Building Code and is capable of resisting the frame's rotation-1/4" thk. Max

The 1.6 wind load allowance was used in the wood anchor calculations.

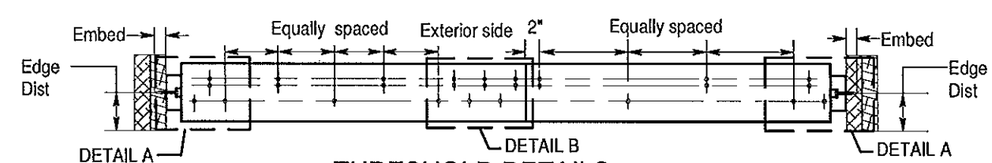

THRESHOLD DETAILS

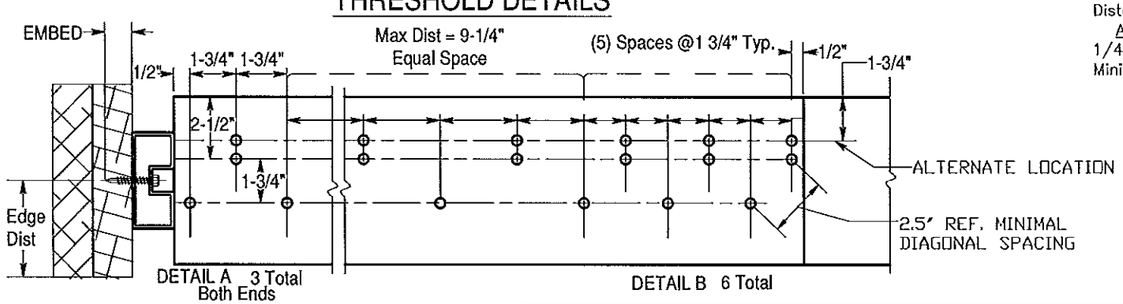

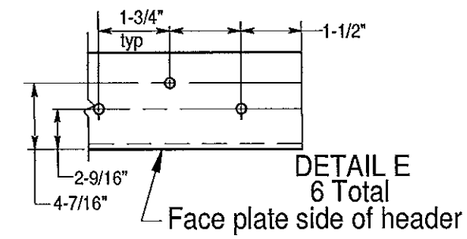

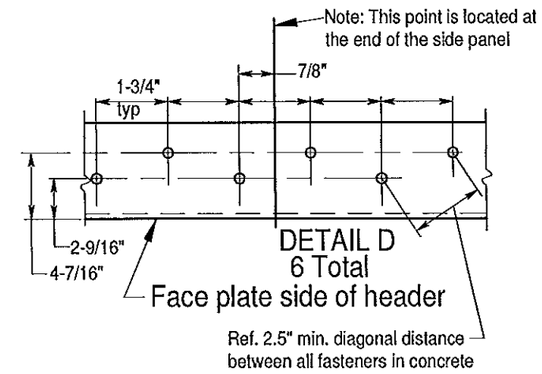

HEADER
Steel (1/8" Thick, Fy=36 KSI) – INTERCORP #14 Steel HWH Self–Drilling Screw (Grade 5), 0.625" Min. Edge Distance (Full Thread Engagement)
Aluminum(0.125" Thick Min./6063–T5) – 1/4"–14 HWH Sheetmetal Screw (Grade 5), 1" Min. Edge Distance. (Full Thread Engagement)

JAMBS
Steel (1/8" Thick, Fy=36 KSI) – ITW TEKS SCREW (Grade 5) #14–20, FH w/WINGS Self–Drilling Screw 0.625" Minimum Edge Distance (Full Thread Engagement)
Concrete(3192 PSI) – BUILDEX TAPCON 1/4" FH Concrete Screw/Anchor, 2.0" Embed, 2.5" Min. Edge Distance
Masonry(Solid CMU ASTM C–90 Block) – BUILDEX TAPCON 1/4" FH Concrete Screw/Anchor, 2.0" Embed, 2.5" Min. Edge Distance
Aluminum(0.125" Thick Minimum/6063–T5) – 1/4"–14 FH Sheetmetal Screw (Grade 5), 1" Min. Edge Distance. (Full Thread Engagement)
Wood(#2 SYP)–#14 x 4" Long Woodscrew 2.75" Minimum Penetration, 1" Minimum Edge Distance. Minimum Buck (2) 2X8 W/Min SG = .55.

THRESHOLD
Steel (1/8" Thick, Fy=36 KSI)– ITW TEKS SCREW #14–20 PFH w/Wings Self–Drilling Screw (Grade 5), 0.625" Minimum Edge Distance (Full Thread Engagement)
Concrete(3192 PSI)– BUILDEX TAPCON FH 1/4" Concrete Screw 2.0" Embed, 2.5" Minimum Edge Distance from substrate
Aluminum(0.125" Thick Minimum/6063–T5) – 1/4"–14 FH Sheetmetal Screw (Grade 5), 1" Minimum Edge Distance (Full Thread Engagement)

Series 310 Single Impact Slide
Slide Fastener Locations

JOHN E. SCATES
3121 FAIRGATE DR.
CARROLLTON, TX 75007
FL PE 51737

John E Scates 7/18/14

JOHN E. SCATES LICENSE No. 51737 STATE OF FLORIDA PROFESSIONAL ENGINEER

PRODUCT REVISED
to complying with the Florida Building Code
Acceptance No. 14-0409.04
Expiration Date 10/10/18
By
Miami Dade Product Control

NO.	REVISIONS DESCRIPTION	DATE
2	Updated Lock ECO 16111	10-2-12
3	Updated Lock ECO 16146	10-26-12
4	Updated Degs ECO 16365	04/29/13
5	Updated Drawings ECO 16488	07/18/13
6	Updated Drawings ECO 16509	08/5/13
7	Updated Drawings ECO 16535	08/23/13
8	Updated Drawings ECO 16572	09/30/13
9	Updated Drawings ECO 16731	3-13-14

ARCHITECT:
CONTRACTOR:
SERIES: 310 TYPE: "SO-SX, SX-SO"
STILE: MEDIUM FINISH:
ACTUATION:

Single Slide Fastener Locations
Dwg. No. 021913

Horton AUTOMATICS
A DIVISION OF OVERHEAD DOOR CORP.
4242 BALDWIN BOULEVARD
CORPUS CHRISTI, TEXAS 78405-3399
361-888-5591 1-800-531-3111
FAX: 361-888-6510, 1-800-531-3108

JOB METRO–DADE
LOCATION:
DISTRIBUTOR:
DWN: MJ P.O. # SHEET 4 of 7
CHK: C.MANDELL DATE: 7-5-12 REVISION 9

ITEM #	HORTON PART NUMBER	DESCRIPTION
1	C03600.005AB	ALUMINUM EXTRUSION: HEADER
2	C03601.002AB	ALUMINUM EXTRUSION: HEADER FACEPLATE
3	C03602.0000	ALUMINUM EXTRUSION: HEADER FACEPLATE BRACKET
4	C00314.000R	ALUMINUM EXTRUSION: INTERLOCK TOP
5	C00327.000R	ALUMINUM EXTRUSION: INTERLOCK LOWER
6	C00337.000RAB	ALUMINUM EXTRUSION: SX TOP RAIL
7	C00379.001ABC	ALUMINUM EXTRUSION: GLASS STOP
8	C00283.0000	ALUMINUM EXTRUSION: BOTTOM RAIL
9	C00343.001ABC	ALUMINUM EXTRUSION: HORIZONTAL RAIL (SO TOP RAIL)
10	C02915.001ABC	ALUMINUM EXTRUSION: VERTICAL RAIL (SO PIVOT)
11	C02886.00ABC	ALUMINUM EXTRUSION: THRESHOLD 7"
12	C00351.0002	ALUMINUM EXTRUSION: JAMB TUBE 4" X 1-3/4" (WITH POCKET)
13	C00323.0000	ALUMINUM EXTRUSION: VERTICAL RAIL (INTERLOCK)
14	C00363.0000	ALUMINUM EXTRUSION: VERTICAL RAIL (SX STRIKE)
15	C02798.0001	ALUMINUM EXTRUSION: ADAPTOR (BRM RAIL BRUSH)
16	C00011.0000	PIVOT RAIL ASSEMBLY LH
17	C00012.0000	PIVOT RAIL ASSEMBLY RH
18	C00888.005AB	CLIP: INTERLOCK SO-SX HD85
19	C00524.00FL	WEATHERSEAL BRUSH (FELTON# 490621)
20	C00524.0000	NOSING SEAL SCHLEGEL (#1104-5101)
21	C00293.0000	WEATHERSEAL BRUSH SCHLEGEL (#8430-5016-7)
22	C00449.0000	#10-24 X 3/4" FHMS (CORNER BLOCKS)
23	C00417.0000	#14 X 1-1/2" HWSMS (CORNER BLOCKS W/REIN.)
24	C00437.0000	#10-24 X 1/2" FHMS (INTERLOCK CLIPS)
25	C08150.0000	1/4-20 X 3/4" HHMB (CORNER BLOCKS W/BACKUP PLATE)
26	C01905.0000	STEEL TUBE (1-1/4" X 1-1/4" X 3/16" X 80.50" LONG) A-36
27	C00537.000R	CORNER BLOCK (337R-TOP SX RAIL)
28	C00536.0001	CORNER BLOCK (343-1- TOP SO RAIL)
29	C00693.0000	CORNER BLOCK (6" BTM RAIL)
30	C03682.0006	DRIVE WHEEL ASSEMBLY
31	C03681.0001	IDLER WHEEL ASSEMBLY
32	C00341.0001	GLAZING BEAD W/ VINYL WEDGE
33	C00358.000R	ALUMINUM EXTRUSION: ASTRAGAL
34	C00664.001AB	#8 X 3/4" FHSMS
35	C02361.0000	PANIC EXIT DEVICE ADAM'S RITE G86H W/CONCEALED ROD
36	C00715.0000	SEAL; 3 FIN SMOKE RATED ICU
37	C00289.0000	TRACK CAP
38	C00538.000R	BACKUP PLATE
39	C00852.004L/R	BOTTOM GUIDE DOOR MOUNTED (LH OR RH)
40	C00454.00AB	LOCK, MAX SECURITY AR MS 1850S W/ADAMS RITE 4015 HEADER/THRESHOLD BOLT

ITEM #	HORTON PART NUMBER	DESCRIPTION
41	C00455.00AB	CYL. ASSEMBLY
42	C00463.00AB	THUMBTURN AR 4066
43	C00883.0001	ADAPTOR ARM (3-POINT LOCK OPTION)
44	C00883.0002	ROD & BOLT ASSEMBLY (3-POINT LOCK OPTION)
45	C00552.0003	GLAZING BLOCK, SNAP-IN
46	C01485.0001	SILICONE; GLAZING (#995 DOW CORNING)
47	C00337.00RAB	EXTRUSION RAIL (MUNTIN OPTION)
48	C00912.0000	TORSION BAR ASSEMBLY
49	C00942.0000	SPRING SX CLOSER OSX ASSEMBLY
50	C00943.0000	SPRING SX CLOSER SXO ASSEMBLY
51	C00932.001AB	ASSEMBLY; TOPARM-SO CLOSER
52	C00353.0000	COVER RECESS JAMB MILL
53	C02850.0000	EXTRUSION; SNAP IN PLASTIC (FOR C2886 THRESHOLD)

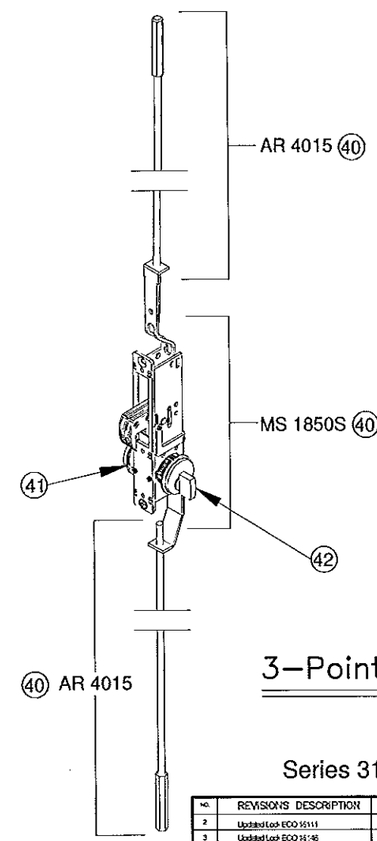

3–Point Lock Option

Series 310 Impact

JOHN E. SCATES
3121 FAIRGATE DR.
CARROLLTON, TX 75007
FL PE 51737

John E Scates 7/18/14

JOHN E. SCATES
LICENSE
No. 51737
STATE OF
FLORIDA
PROFESSIONAL ENGINEER

PRODUCT REVISED
to complying with the Florida
Building Code
Acceptance No 14-0709.04
Expiration Date 10/1/18
By
Miami Dade Product Control

NO.	REVISIONS DESCRIPTION	DATE
2	Updated Lock ECO 15111	12-2-12
3	Updated Lock ECO 15148	12-26-12
4	Updated Dwgs ECO 15356	04-25-13
5	Updated Drawings ECO 15428	07-18-13
6	Updated Drawings ECO 15529	08-5-13
7	Updated Drawings ECO 15535	08-26-13
8	Updated Drawings ECO 15572	09-30-13
9	Updated Drawings ECO 15731	3-13-14

ARCHITECT:
CONTRACTOR:
SERIES: 2001/310 TYPE:
STILE: MEDIUM FINISH:
ACTUATION:

Bill of materials
Dwg. No. 021913

Horton AUTOMATICS
A DIVISION OF OVERHEAD DOOR CORP.
4242 BALDWIN BOULEVARD
CORPUS CHRISTI, TEXAS 78405-3399
361-888-5581 1-800-531-3111
FAX: 361-888-6510, 1-800-531-3108

JOB METRO–DADE
LOCATION:
DISTRIBUTOR:
DWN: MJ P.O. # SHEET 5 of 7
CHK: CVANDELL DATE 7–6–12 REVISION 9

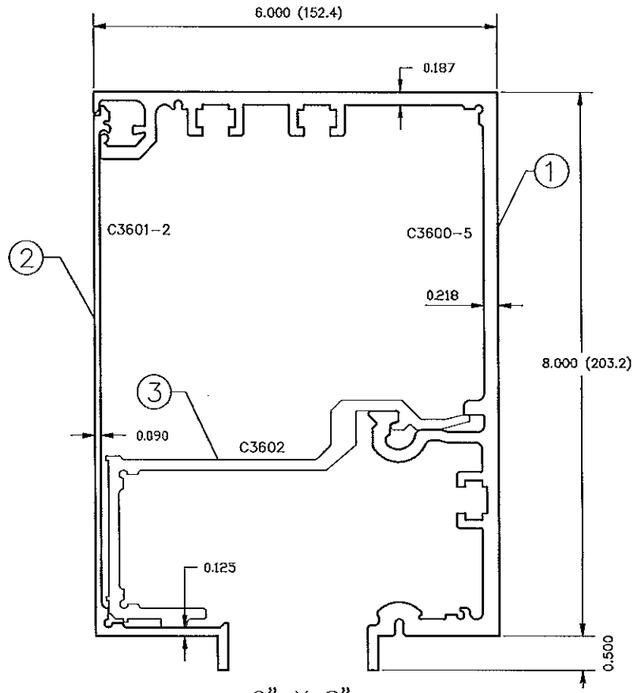

6" X 8"
(152.4) (203.2)
HEADER ASSEMBLED

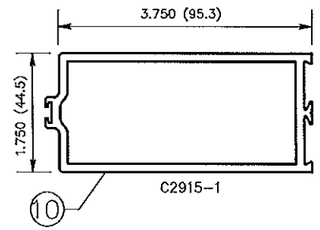

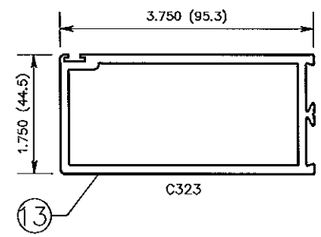

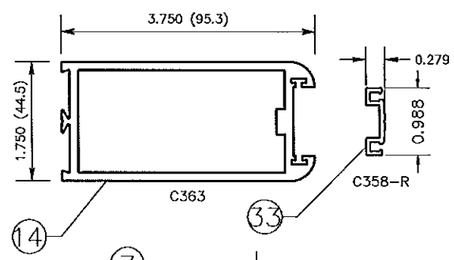

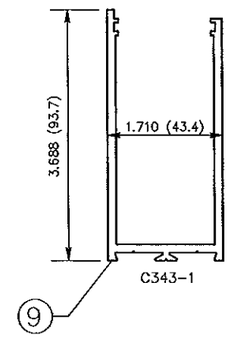

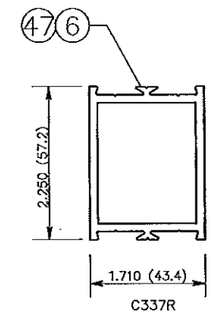

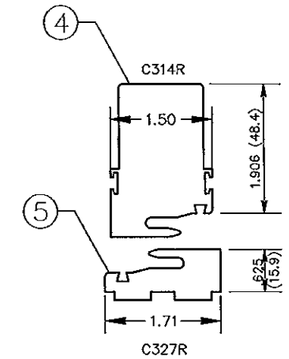

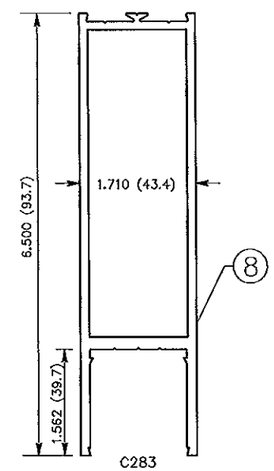

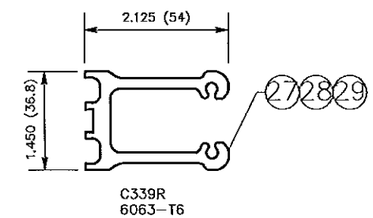

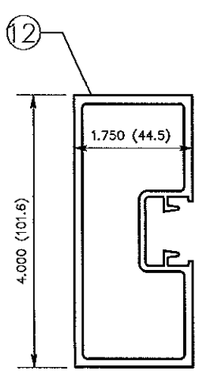

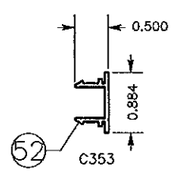

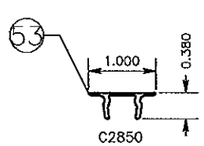

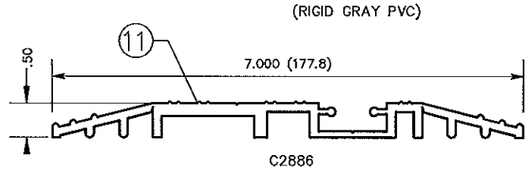

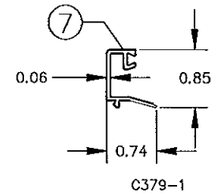

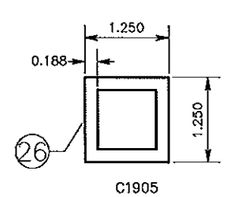

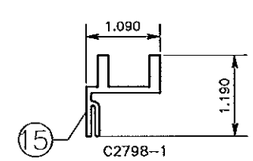

Series 310 Impact Slide

ALL EXTRUSIONS ARE 6063-T5 UNLESS OTHERWISE NOTED & t min=1/8"

JOHN E. SCATES
3121 FAIRGATE DR.
CARROLLTON, TX 75007
FL PE 51737

JOHN E. SCATES LICENSE No. 51737 STATE OF FLORIDA PROFESSIONAL ENGINEER

PRODUCT REVIEWED
as complying with the Florida
Building Code
Acceptance No 14-0408.04
Expiration Date 10/14/15
By
Miami Dade Product Control

NO	REVISIONS DESCRIPTION	DATE
2	Updated Lock Sht 1 ECO 16111	9-2-12
3	Updated Lock Sht 1 ECO 16146	10-26-12
4	Updated Dwg Sht 1 ECO 16395	04/29/13
5	Updated Drawings ECO 16528	07/18/13
6	Updated Drawings ECO 16539	08/5/13
7	Updated Drawings ECO 16536	08/23/13
8	Updated Drawings ECO 16572	09/30/13
9	Updated Drawings ECO 16731	3-13-14

ARCHITECT:
CONTRACTOR:
SERIES: 310 TYPE:
STILE: MEDIUM FINISH:
ACTUATION:

Extrusion chart
Dwg. No. 021913

Horton AUTOMATICS
A DIVISION OF OVERHEAD DOOR CORP.
4242 BALDWIN BOULEVARD
CORPUS CHRISTI, TEXAS 78405-3399
361-888-5591 1-800-531-3111
FAX: 361-888-6510, 1-800-531-3108

JOB METRO-DADE
LOCATION:
DISTRIBUTOR:
DWN MJ P.O. # SHEET 6 of 7
CHK C.MANDELL DATE 6-05-12 REVISION 9

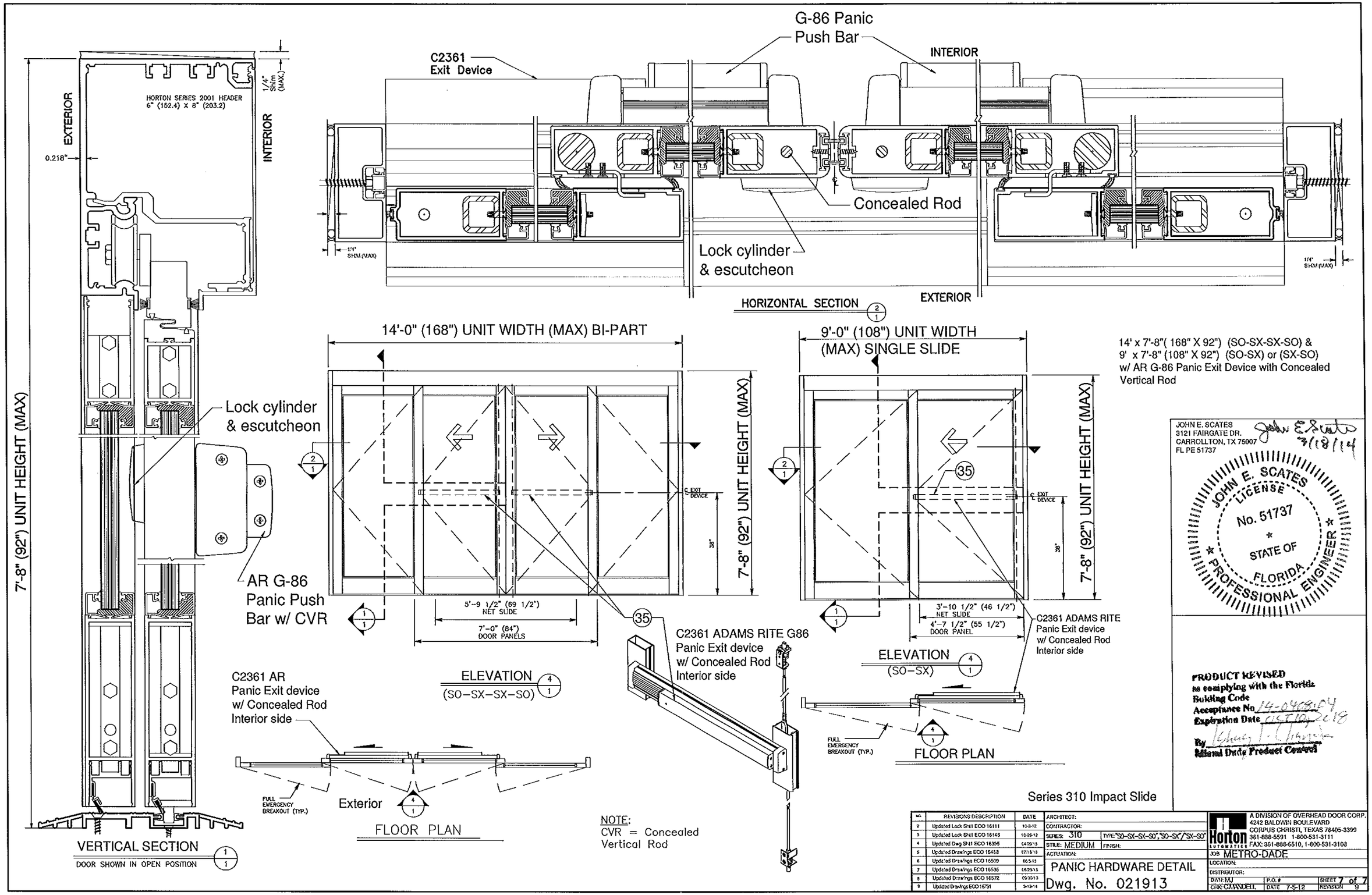
G-86 Panic
Push Bar
C2361
Exit Device
INTERIOR
EXTERIOR
Concealed Rod
Lock cylinder
& escutcheon
1/4" SHIM (MAX)
HORIZONTAL SECTION 2/1
HORTON SERIES 2001 HEADER
6" (152.4) X 8" (203.2)
1/4" Shim (MAX.)
0.218"
7'-8" (92") UNIT HEIGHT (MAX)
Lock cylinder
& escutcheon
AR G-86
Panic Push
Bar w/ CVR
VERTICAL SECTION 1/1
DOOR SHOWN IN OPEN POSITION
14'-0" (168") UNIT WIDTH (MAX) BI-PART
5'-9 1/2" (69 1/2")
NET SLIDE
7'-0" (84")
DOOR PANELS
℄ EXIT DEVICE
38"
ELEVATION 4/1
(SO-SX-SX-SO)
C2361 AR
Panic Exit device
w/ Concealed Rod
Interior side
FULL EMERGENCY BREAKOUT (TYP.)
Exterior
FLOOR PLAN
C2361 ADAMS RITE G86
Panic Exit device
w/ Concealed Rod
Interior side
NOTE:
CVR = Concealed
Vertical Rod
9'-0" (108") UNIT WIDTH
(MAX) SINGLE SLIDE
3'-10 1/2" (46 1/2")
NET SLIDE
4'-7 1/2" (55 1/2")
DOOR PANEL
C2361 ADAMS RITE
Panic Exit device
w/ Concealed Rod
Interior side
ELEVATION 4/1
(SO-SX)
FULL EMERGENCY BREAKOUT (TYP.)
FLOOR PLAN
14' x 7'-8"(168" X 92") (SO-SX-SX-SO) &
9' x 7'-8" (108" X 92") (SO-SX) or (SX-SO)
w/ AR G-86 Panic Exit Device with Concealed
Vertical Rod
JOHN E. SCATES
3121 FAIRGATE DR.
CARROLLTON, TX 75007
FL PE 51737
3/18/14
JOHN E. SCATES
LICENSE
No. 51737
STATE OF
FLORIDA
PROFESSIONAL ENGINEER
PRODUCT REVISED
as complying with the Florida
Building Code
Acceptance No 14-0408.04
Expiration Date OCT 10, 2018
By
Miami Dade Product Control
Series 310 Impact Slide
NO. | REVISIONS DESCRIPTION | DATE
2 | Updated Lock Shtl ECO 16111 | 10-2-12
3 | Updated Lock Shtl ECO 16145 | 10-26-12
4 | Updated Dwg Shtl ECO 16395 | 04-29-13
5 | Updated Drawings ECO 16458 | 07-16-13
6 | Updated Drawings ECO 16509 | 08-5-13
7 | Updated Drawings ECO 16535 | 08-25-13
8 | Updated Drawings ECO 16572 | 09-30-13
9 | Updated Drawings ECO 16731 | 3-13-14
ARCHITECT:
CONTRACTOR:
SERIES: 310
TYPE: "SO-SX-SX-SO", "SO-SX", "SX-SO"
STILE: MEDIUM
FINISH:
ACTUATION:
PANIC HARDWARE DETAIL
Dwg. No. 021913
Horton AUTOMATICS
A DIVISION OF OVERHEAD DOOR CORP.
4242 BALDWIN BOULEVARD
CORPUS CHRISTI, TEXAS 78405-3399
361-888-5591 1-800-531-3111
FAX: 361-888-6510, 1-800-531-3108
JOB METRO-DADE
LOCATION:
DISTRIBUTOR:
DWN: MJ
P.O. #
SHEET 7 of 7
CHK: CJWANDELL
DATE 7-5-12
REVISION 9