MIAMI-DADE COUNTY
DEPARTMENT OF REGULATORY AND ECONOMIC RESOURCES (RER)
BOARD AND CODE ADMINISTRATION DIVISION

MIAMI-DADE COUNTY
PRODUCT CONTROL SECTION
11805 SW 26 Street, Room 208
T (786) 315-2590 F (786) 315-2599
www.miamidade.gov/economy

NOTICE OF ACCEPTANCE (NOA)

Aldora Aluminum & Glass Products, Inc.
11500 Miramar Parkway, Suite 300
Miramar, FL 33025

SCOPE:

This NOA is being issued under the applicable rules and regulations governing the use of construction materials. The documentation submitted has been reviewed and accepted by Miami-Dade County RER - Product Control Section to be used in Miami Dade County and other areas where allowed by the Authority Having Jurisdiction (AHJ).

This NOA shall not be valid after the expiration date stated below. The Miami-Dade County Product Control Section (In Miami Dade County) and/or the AHJ (in areas other than Miami Dade County) reserve the right to have this product or material tested for quality assurance purposes. If this product or material fails to perform in the accepted manner, the manufacturer will incur the expense of such testing and the AHJ may immediately revoke, modify, or suspend the use of such product or material within their jurisdiction. RER reserves the right to revoke this acceptance, if it is determined by Miami-Dade County Product Control Section that this product or material fails to meet the requirements of the applicable building code.

This product is approved as described herein, and has been designed to comply with the Florida Building Code, including the High Velocity Hurricane Zone.

DESCRIPTION: Series "Front Set" Aluminum Window Wall System – L.M.I.

APPROVAL DOCUMENT: Drawing No. **W14–12,** titled "Series Front Set Alum Windowall Sys. (L.M.I.)", sheets 1 through 10, 11, 11.1, 12 and 13 through 19 of 19, dated 03/21/14, prepared by Al–Farooq Corporation, signed and sealed by Javad Ahmad, P.E., bearing the Miami–Dade County Product Control Approval stamp with the Notice of Acceptance number and approval date by the Miami–Dade County Product Control Section.

MISSILE IMPACT RATING: Large and Small Missile Impact Resistant

LABELING: Each unit shall bear a permanent label with the manufacturer's name or logo, city, state, model/series, and following statement: "Miami-Dade County Product Control Approved", unless otherwise noted herein.

RENEWAL of this NOA shall be considered after a renewal application has been filed and there has been no change in the applicable building code negatively affecting the performance of this product.

TERMINATION of this NOA will occur after the expiration date or if there has been a revision or change in the materials, use, and/or manufacture of the product or process. Misuse of this NOA as an endorsement of any product, for sales, advertising or any other purposes shall automatically terminate this NOA. Failure to comply with any section of this NOA shall be cause for termination and removal of NOA.

ADVERTISEMENT: The NOA number preceded by the words Miami-Dade County, Florida, and followed by the expiration date may be displayed in advertising literature. If any portion of the NOA is displayed, then it shall be done in its entirety.

INSPECTION: A copy of this entire NOA shall be provided to the user by the manufacturer or its distributors and shall be available for inspection at the job site at the request of the Building Official.

This NOA consists of this page 1 and evidence pages E-1 and E-2, as well as approval document mentioned above.

The submitted documentation was reviewed by **Manuel Perez, P.E.**

MIAMI-DADE COUNTY APPROVED

6/27/14

Aldora Aluminum & Glass Products, Inc.

NOTICE OF ACCEPTANCE: EVIDENCE SUBMITTED

A. DRAWINGS

1. Manufacturer's die drawings and sections.
2. Drawing No **W14–12**, titled "Series Front Set Alum Windowall Sys. (L.M.I.)", sheets 1 through 10, 11, 11.1, 12 and 13 through 19 of 19, dated 03/21/14, prepared by Al–Farooq Corporation, signed and sealed by Javad Ahmad, P.E.

B. TESTS

1. Test reports on: 1) Air Infiltration Test, per FBC, TAS 202–94
   2) Uniform Static Air Pressure Test, Loading per FBC, TAS 202–94
   3) Water Resistance Test, per FBC, TAS 202–94
   4) Large Missile Impact Test per FBC, TAS 201–94
   5) Cyclic Wind Pressure Loading per FBC, TAS 203–94
   6) Forced Entry Test, per FBC 2411.3.2.1, and TAS 202–94

   along with marked–up drawings and installation diagram of an aluminum window wall system, prepared by Fenestration Testing Laboratory, Inc., Test Report No. **FTL 7140**, dated November 27, 2013, signed and sealed by Marlin D. Brinson, P.E.
2. Test reports on: 1) Uniform Static Air Pressure Test, Loading per FBC TAS 202–94
   2) Large Missile Impact Test per FBC, TAS 201–94
   3) Cyclic Wind Pressure Loading per FBC, TAS 203–94

   along with marked–up drawings and installation diagram of an aluminum window wall system, prepared by Fenestration Testing Laboratory, Inc., Test Report No. **FTL 7641**, dated March 18, 2014, signed and sealed by Marlin D. Brinson, P.E.
3. Test reports on: 1) Uniform Static Air Pressure Test, Loading per FBC TAS 202–94
   2) Large Missile Impact Test per FBC, TAS 201–94
   3) Cyclic Wind Pressure Loading per FBC, TAS 203–94

   along with marked–up drawings and installation diagram of an aluminum window wall system, prepared by Fenestration Testing Laboratory, Inc., Test Report No. **FTL 7698**, dated March 18, 2014, signed and sealed by Marlin D. Brinson, P.E.

C. CALCULATIONS

1. Anchor verification calculations and structural analysis, complying with **FBC 5th Edition (2014)**, prepared by Al–Farooq Corporation, dated April 9, 2014, all signed and sealed by Javad Ahmad, P.E.
2. Glazing complies with **ASTM E1300–09**

D. QUALITY ASSURANCE

1. Miami-Dade Department of Regulatory and Economic Resources (RER)

Manuel Perez

Manuel Perez, P.E.
Product Control Examiner
NOA No. 14-0415.06
Expiration Date: July 03, 2019
Approval Date: July 03, 2014

NOTICE OF ACCEPTANCE: EVIDENCE SUBMITTED

E. MATERIAL CERTIFICATIONS

1. Notice of Acceptance No. **11–0624.02** issued to **E.I. DuPont DeNemours & Co.**, Inc. for their "**DuPont SentryGlas® Interlayer**" dated 08/25/11, expiring on 01/14/17.
2. Notice of Acceptance No. **13–1126. 20** issued to **Allnex USA, Inc.** for their "**Uvekol S Laminated Glass Interlayer**", dated 02/20/14, expiring on 02/08/19.
3. Notice of Acceptance No. **12–1231.10** issued to **Eastman Chemical Company (MA)** for their "**Saflex Clear and Color Glass Interlayers**" dated 03/28/13, expiring on 05/21/16.

F. STATEMENTS

1. Statement letter of conformance, complying with **FBC 5th Edition (2014)**, and of no financial interest, dated April 9, 2014, issued by Al-Farooq Corporation, signed and sealed by Javad Ahmad, P.E.
2. Proposal No. **12–1644** issued by the Product Control Section, dated September 10, 2012, signed by Manuel Perez, P.E.

G. OTHER

1. None.

Manuel Perez, P.E.
Product Control Examiner
NOA No. 14-0415.06
Expiration Date: July 03, 2019
Approval Date: July 03, 2014

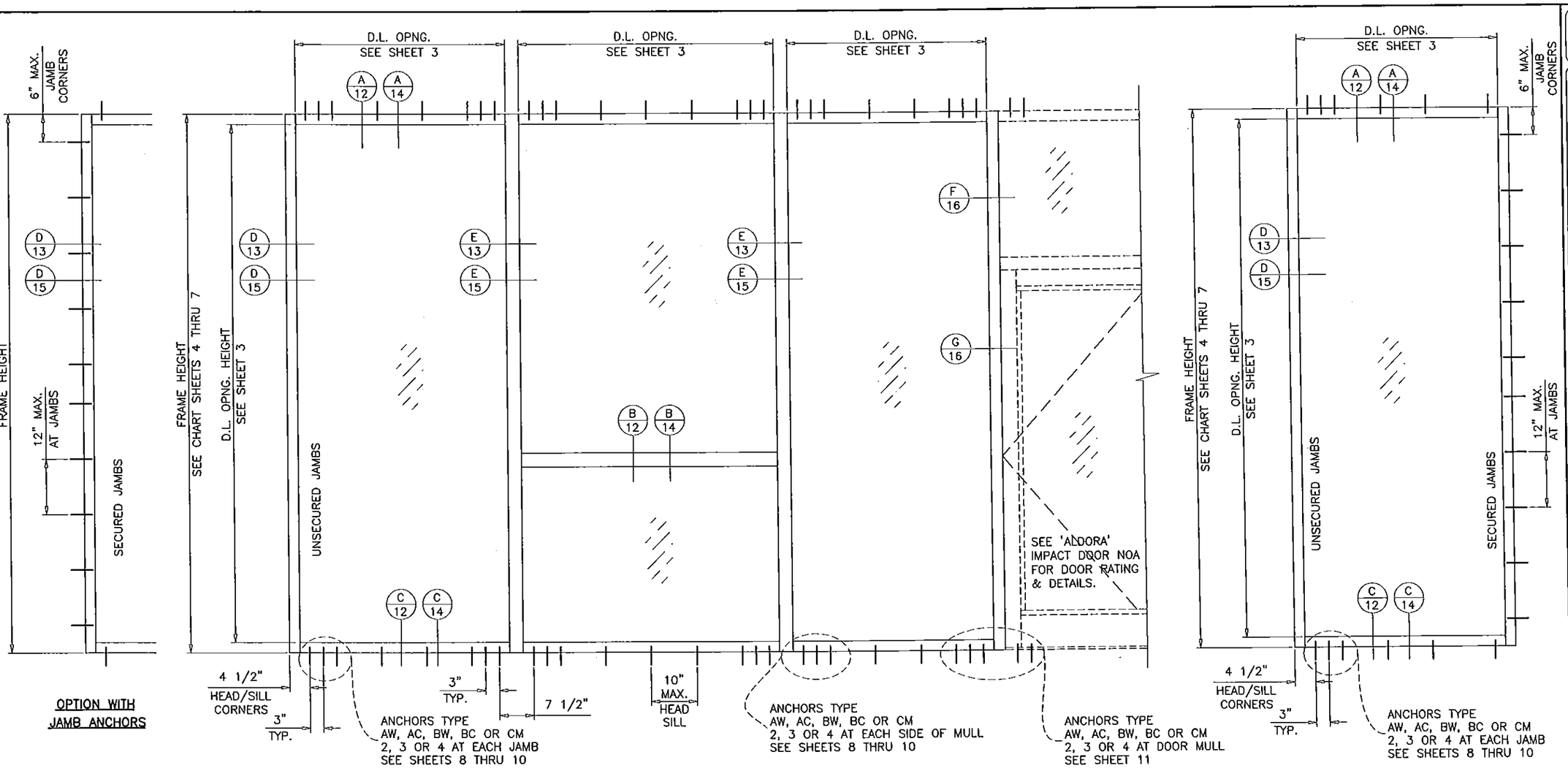

TYPICAL ELEVATIONS

SERIES FRONT SET ALUMINUM WINDOWALL SYSTEM

THIS SYSTEM MAY BE USED IN CONJUNCTION WITH MIAMI-DADE COUNTY APPR'D LARGE MISSILE IMPACT RESISTANT DOORS. LOWER DESIGN PRESSURE FROM STOREFRONT OR DOOR APPROVAL WILL APPLY TO ENTIRE SYSTEM.

CODE REQUIREMENTS FOR SAFEGUARDS MUST BE OBSERVED.

THIS PRODUCT HAS BEEN DESIGNED AND TESTED TO COMPLY WITH THE REQUIREMENTS OF THE FLORIDA BUILDING CODE INCLUDING HIGH VELOCITY HURRICANE ZONE (HVHZ).

WOOD BUCKS BY OTHERS, MUST BE ANCHORED PROPERLY TO TRANSFER LOADS TO THE STRUCTURE.

ANCHORS SHALL BE AS LISTED, SPACED AS SHOWN ON DETAILS, ANCHORS EMBEDMENT TO BASE MATERIAL SHALL BE BEYOND WALL DRESSING OR STUCCO.

ANCHORING OR LOADING CONDITIONS NOT SHOWN IN THESE DETAILS ARE NOT PART OF THIS APPROVAL.

A LOAD DURATION INCREASE IS USED IN DESIGN OF ANCHORS INTO WOOD ONLY.

MATERIALS INCLUDING BUT NOT LIMITED TO STEEL/METAL SCREWS, THAT COME INTO CONTACT WITH OTHER DISSIMILAR MATERIALS SHALL MEET THE REQUIREMENTS OF THE FLORIDA BLDG. CODE.

SINGLE 'O' PANEL:
FRAME WIDTH = D.L.O. WIDTH + 4.50"
FRAME HEIGHT = D.L.O. HEIGHT + 4.50"

INSTRUCTIONS:

USE CHARTS AS FOLLOWS.

- STEP 1 — DETERMINE DESIGN WIND LOAD REQUIREMENT BASED ON WIND VELOCITY, BLDG. HEIGHT, WIND ZONE USING APPLICABLE ASCE 7 STANDARD.
- STEP 2 — SEE CHARTS ON SHEET 3 FOR DESIGN LOAD CAPACITY OF DESIRED GLASS SIZE.
- STEP 3 — CHECK MULLION CAPACITY FOR A GIVEN SPACING AND HEIGHT USING CHARTS ON SHEETS 4 THRU 7 FOR STOREFRONT MULLION AND SHEET 11 FOR DOOR MULLION. THE CAPACITY SHOULD EXCEED THE DESIGN LOAD.
- STEP 4 — USING CHART ON SHEETS 8 THRU 10 SELECT ANCHOR OPTION WITH DESIGN RATING MORE THAN DESIGN LOAD SPECIFIED IN STEP 1 ABOVE.
- STEP 5 — THE LOWEST VALUE RESULTING FROM STEPS 2, 3, AND 4 SHALL APPLY TO ENTIRE SYSTEM.

PRODUCT COMPLIES WITH REQUIREMENTS OF ANSI Z97.1.

THIS SYSTEM IS RATED FOR LARGE & SMALL MISSILE IMPACT.
SHUTTERS ARE NOT REQUIRED.
WINDOW WALL FRAMES MAY BE WITH OR WITHOUT THERMAL BREAK.

Engr: JAVAD AHMAD
CIVIL
FLA. PE # 70592
C.A.N. 3538

JUN 0 9 2014

Approved as complying with the Florida Building Code
Date July 3, 2014
NOA# 14-0415.06
Miami Dade Product Control
By Manuel Perez

AL-FAROOQ CORPORATION
ENGINEERS & PRODUCT DEVELOPMENT
1235 S.W. 87 AVE
MIAMI, FLORIDA 33174
TEL. (305) 264-8100 FAX. (305) 262-6978
COMP-ANL\W14-12AGP

SERIES FRONT SET ALUM WINDOWALL SYS. (L.M.I.)

Aldora Aluminum & Glass Products Inc.
11500 MIRAMAR PARKWAY SUITE 300
MIRAMAR, FL. 33025
TEL. (305) 888-6288 FAX. (305) 888-6289

revisions:

no	date	by	description

date: 03-21-14
scale: 1/2"=1'-0"
dr. by: HAMID
chk. by:

drawing no. W14-12

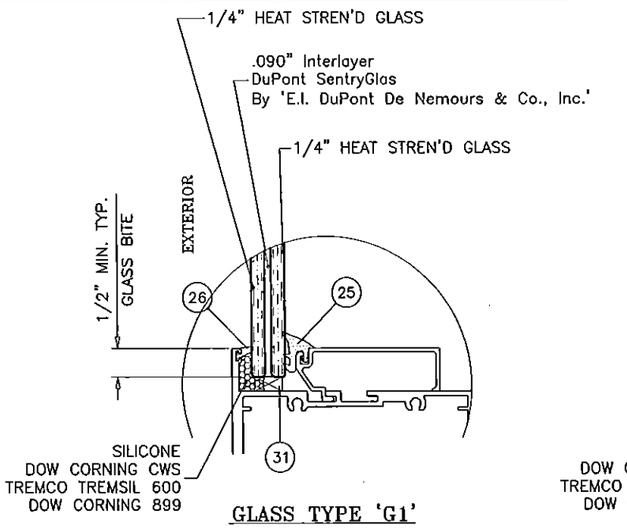

GLASS TYPE 'G1'

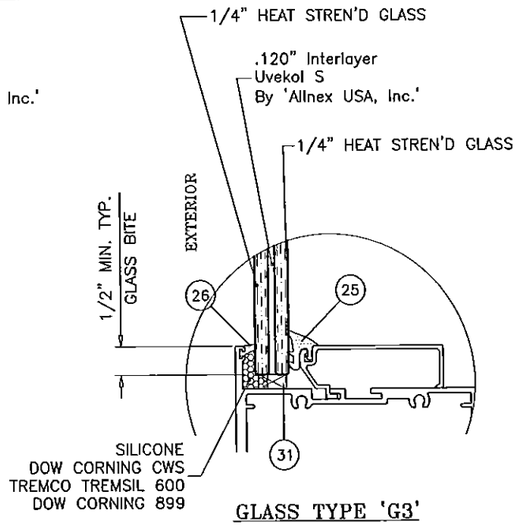

GLASS TYPE 'G3'

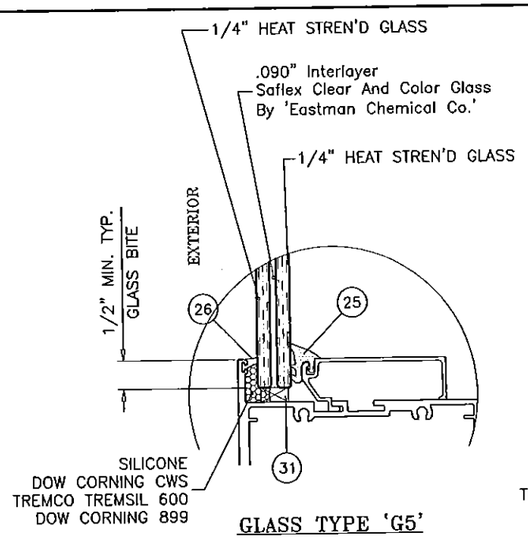

GLASS TYPE 'G5'

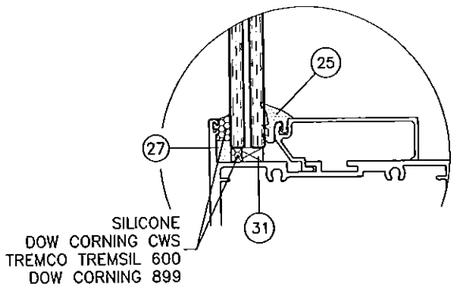

ALTERNATE GLAZING DETAIL
OPTIONAL FOR GLASS TYPES 'G1', 'G3' & 'G5'

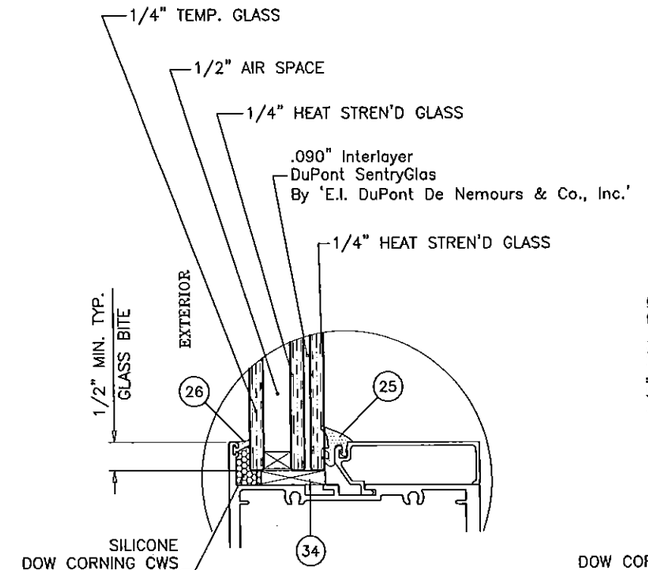

GLASS TYPE 'G2'

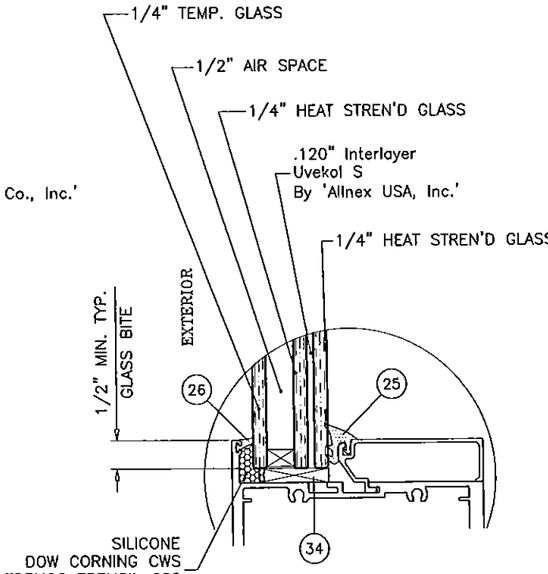

GLASS TYPE 'G4'

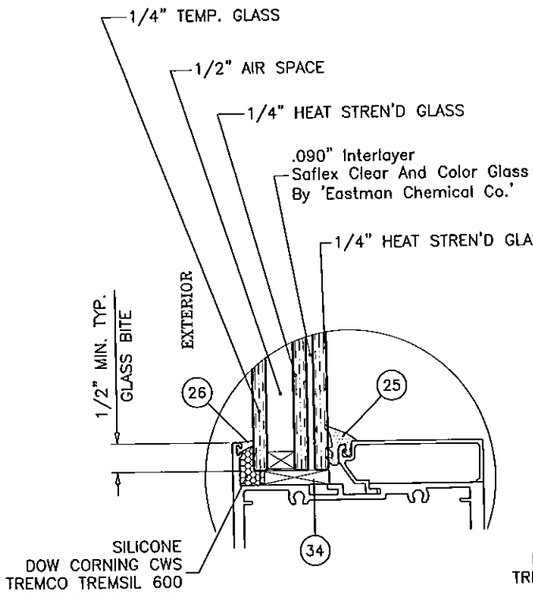

GLASS TYPE 'G6'

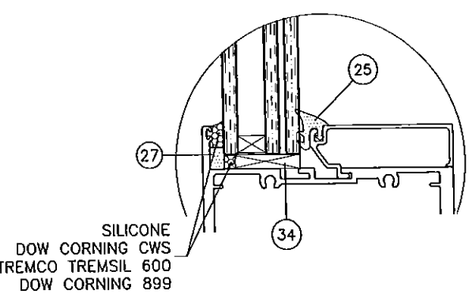

ALTERNATE GLAZING DETAIL
OPTIONAL FOR GLASS TYPES 'G2', 'G4' & 'G6'

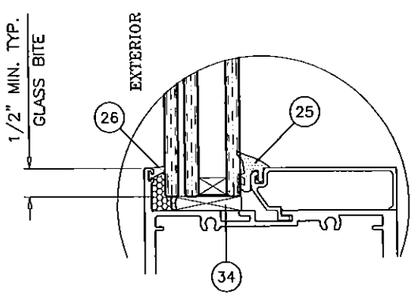

LAMINATED GLASS ON EXTERIOR
OPTIONAL FOR GLASS TYPES 'G2', 'G4' & 'G6'

1/2" AIR SPACE CONSISTING OF:
SPACER:
ALUMINUM BOX SPACER AROUND THE PERIMETER OF THE GLASS.
PERIMETER SEALANT:
SILICONE
DOW CORNING 791
GE 2000

Engr: JAVAD AHMAD
CIVIL
FLA. PE # 70592
C.A.N. 3538
JUN 09 2014

Approved as complying with the Florida Building Code
Date July 3, 2014
NOA# 14-0415.06
Miami Dade Product Control
By Manuel Perez

AL-FAROOQ CORPORATION
ENGINEERS & PRODUCT DEVELOPMENT
1235 S.W. 87 AVE
MIAMI, FLORIDA 33174
TEL. (305) 264-8100 FAX. (305) 262-6978

COMP-ANL\W14-12AGP

SERIES FRONT SET ALUM WINDOWALL SYS. (L.M.I.)

Aldora Aluminum & Glass Products Inc.
11500 MIRAMAR PARKWAY SUITE 300
MIRAMAR, FL. 33025
TEL. (305) 888-6288 FAX. (305) 888-6289

revisions:

no	date	by	description

date: 03-21-14
scale: -
dr. by: HAMID
chk. by:

drawing no.
W14-12

GLASS LOAD CAPACITY - PSF

NOMINAL DIMS.		GLASS TYPES					
		'G1' & 'G2'		'G3' & 'G4'		'G5' & 'G6'	
D.L.O. WIDTH	D.L.O. HEIGHT	EXT.(+)	INT.(−)	EXT.(+)	INT.(−)	EXT.(+)	INT.(−)
33"	73−1/2"	120.0	135.0	120.0	135.0	65.0	75.0
36"		120.0	135.0	120.0	135.0	65.0	75.0
39"		120.0	135.0	120.0	135.0	65.0	75.0
42"		120.0	135.0	120.0	135.0	65.0	75.0
45"		120.0	135.0	120.0	135.0	65.0	75.0
48"		120.0	135.0	120.0	135.0	65.0	75.0
51"		120.0	135.0	120.0	135.0	65.0	75.0
54"		120.0	135.0	120.0	135.0	65.0	75.0
57"		120.0	135.0	120.0	135.0	65.0	75.0
60"		120.0	135.0	120.0	135.0	65.0	75.0
63"		90.0	90.0	80.0	80.0	65.0	75.0
66"		60.0	60.0	80.0	80.0	65.0	75.0
69"		60.0	60.0	80.0	80.0	65.0	75.0
33"	79−1/2"	120.0	135.0	120.0	135.0	65.0	75.0
36"		120.0	135.0	120.0	135.0	65.0	75.0
39"		120.0	135.0	120.0	135.0	65.0	75.0
42"		120.0	135.0	120.0	135.0	65.0	75.0
45"		120.0	135.0	120.0	135.0	65.0	75.0
48"		120.0	135.0	120.0	135.0	65.0	75.0
51"		120.0	135.0	120.0	135.0	65.0	75.0
54"		120.0	135.0	120.0	135.0	65.0	75.0
57"		90.0	90.0	80.0	80.0	65.0	75.0
60"		60.0	60.0	80.0	80.0	65.0	75.0
63"		60.0	60.0	80.0	80.0	65.0	75.0
66"		60.0	60.0	80.0	80.0	−	−
69"		60.0	60.0	80.0	80.0	−	−
33"	85−1/2"	120.0	135.0	120.0	135.0	65.0	75.0
36"		120.0	135.0	120.0	135.0	65.0	75.0
39"		120.0	135.0	120.0	135.0	65.0	75.0
42"		120.0	135.0	120.0	135.0	65.0	75.0
45"		120.0	135.0	120.0	135.0	65.0	75.0
48"		120.0	135.0	120.0	135.0	65.0	75.0
51"		120.0	135.0	120.0	135.0	65.0	75.0
54"		90.0	90.0	80.0	80.0	65.0	75.0
57"		60.0	60.0	80.0	80.0	65.0	75.0
60"		60.0	60.0	80.0	80.0	65.0	75.0
63"		60.0	60.0	80.0	80.0	−	−
66"		60.0	60.0	80.0	80.0	−	−
69"		60.0	60.0	80.0	80.0	−	−
33"	91−1/2"	120.0	135.0	120.0	135.0	65.0	75.0
36"		120.0	135.0	120.0	135.0	65.0	75.0
39"		120.0	135.0	120.0	135.0	65.0	75.0
42"		120.0	135.0	120.0	135.0	65.0	75.0
45"		120.0	135.0	120.0	135.0	65.0	75.0
48"		120.0	135.0	120.0	135.0	65.0	75.0
51"		60.0	60.0	80.0	80.0	65.0	75.0
54"		60.0	60.0	80.0	80.0	65.0	75.0
57"		60.0	60.0	80.0	80.0	−	−
60"		60.0	60.0	80.0	80.0	−	−
63"		60.0	60.0	80.0	80.0	−	−
66"		60.0	60.0	80.0	80.0	−	−
69"		60.0	60.0	80.0	80.0	−	−

GLASS LOAD CAPACITY - PSF

NOMINAL DIMS.		GLASS TYPES					
		'G1' & 'G2'		'G3' & 'G4'		'G5' & 'G6'	
D.L.O. WIDTH	D.L.O. HEIGHT	EXT.(+)	INT.(−)	EXT.(+)	INT.(−)	EXT.(+)	INT.(−)
33"	97−1/2"	120.0	135.0	120.0	135.0	65.0	75.0
36"		120.0	135.0	120.0	135.0	65.0	75.0
39"		120.0	135.0	120.0	135.0	65.0	75.0
42"		120.0	135.0	120.0	135.0	65.0	75.0
45"		120.0	135.0	120.0	135.0	65.0	75.0
48"		60.0	60.0	80.0	80.0	65.0	75.0
51"		60.0	60.0	80.0	80.0	65.0	75.0
54"		60.0	60.0	80.0	80.0	−	−
57"		60.0	60.0	80.0	80.0	−	−
60"		60.0	60.0	80.0	80.0	−	−
63"		60.0	60.0	80.0	80.0	−	−
66"		60.0	60.0	80.0	80.0	−	−
69"		60.0	60.0	80.0	80.0	−	−
33"	103−1/2"	120.0	135.0	120.0	135.0	65.0	75.0
36"		120.0	135.0	120.0	135.0	65.0	75.0
39"		120.0	135.0	120.0	135.0	65.0	75.0
42"		120.0	135.0	120.0	135.0	65.0	75.0
45"		90.0	90.0	80.0	80.0	65.0	75.0
48"		60.0	60.0	80.0	80.0	65.0	75.0
51"		60.0	60.0	80.0	80.0	−	−
54"		60.0	60.0	80.0	80.0	−	−
57"		60.0	60.0	80.0	80.0	−	−
60"		60.0	60.0	80.0	80.0	−	−
63"		60.0	60.0	80.0	80.0	−	−
66"		60.0	60.0	80.0	80.0	−	−
69"		60.0	60.0	80.0	80.0	−	−
33"	109−1/2"	120.0	135.0	120.0	135.0	65.0	75.0
36"		120.0	135.0	120.0	135.0	65.0	75.0
39"		120.0	135.0	120.0	135.0	65.0	75.0
42"		90.0	90.0	80.0	80.0	65.0	75.0
45"		60.0	60.0	80.0	80.0	65.0	75.0
48"		60.0	60.0	80.0	80.0	−	−
51"		60.0	60.0	80.0	80.0	−	−
54"		60.0	60.0	80.0	80.0	−	−
57"		60.0	60.0	80.0	80.0	−	−
60"		60.0	60.0	80.0	80.0	−	−
63"		60.0	60.0	80.0	80.0	−	−
66"		60.0	60.0	80.0	80.0	−	−
69"		60.0	60.0	80.0	80.0	−	−
33"	115−1/2"	120.0	135.0	120.0	135.0	65.0	75.0
36"		120.0	135.0	120.0	135.0	65.0	75.0
39"		120.0	135.0	120.0	135.0	65.0	75.0
42"		60.0	60.0	80.0	80.0	65.0	75.0
45"		60.0	60.0	80.0	80.0	65.0	75.0
48"		60.0	60.0	80.0	80.0	−	−
51"		60.0	60.0	80.0	80.0	−	−
54"		60.0	60.0	80.0	80.0	−	−
57"		60.0	60.0	80.0	80.0	−	−
60"		60.0	60.0	80.0	80.0	−	−
63"		60.0	60.0	80.0	80.0	−	−
66"		60.0	60.0	80.0	80.0	−	−

GLASS LOAD CAPACITY - PSF

NOMINAL DIMS.		GLASS TYPES					
		'G1' & 'G2'		'G3' & 'G4'		'G5' & 'G6'	
D.L.O. WIDTH	D.L.O. HEIGHT	EXT.(+)	INT.(−)	EXT.(+)	INT.(−)	EXT.(+)	INT.(−)
33"	121−1/2"	120.0	135.0	120.0	135.0	65.0	75.0
36"		120.0	135.0	120.0	135.0	65.0	75.0
39"		60.0	60.0	80.0	80.0	65.0	75.0
42"		60.0	60.0	80.0	80.0	65.0	75.0
45"		60.0	60.0	80.0	80.0	−	−
48"		60.0	60.0	80.0	80.0	−	−
51"		60.0	60.0	80.0	80.0	−	−
54"		60.0	60.0	80.0	80.0	−	−
57"		60.0	60.0	80.0	80.0	−	−
60"		60.0	60.0	80.0	80.0	−	−
63"		60.0	60.0	80.0	80.0	−	−
33"	127−1/2"	120.0	135.0	120.0	135.0	65.0	75.0
36"		90.0	90.0	80.0	80.0	65.0	75.0
39"		60.0	60.0	80.0	80.0	65.0	75.0
42"		60.0	60.0	80.0	80.0	−	−
45"		60.0	60.0	80.0	80.0	−	−
48"		60.0	60.0	80.0	80.0	−	−
51"		60.0	60.0	80.0	80.0	−	−
54"		60.0	60.0	80.0	80.0	−	−
57"		60.0	60.0	80.0	80.0	−	−
60"		60.0	60.0	80.0	80.0	−	−
33"	133−1/2"	120.0	135.0	120.0	135.0	65.0	75.0
36"		60.0	60.0	80.0	80.0	65.0	75.0
39"		60.0	60.0	80.0	80.0	−	−
42"		60.0	60.0	80.0	80.0	−	−
45"		60.0	60.0	80.0	80.0	−	−
48"		60.0	60.0	80.0	80.0	−	−
51"		60.0	60.0	80.0	80.0	−	−
54"		60.0	60.0	80.0	80.0	−	−
57"		60.0	60.0	80.0	80.0	−	−
33"	139−1/2"	90.0	90.0	80.0	80.0	65.0	75.0
36"		60.0	60.0	80.0	80.0	65.0	75.0
39"		60.0	60.0	80.0	80.0	−	−
42"		60.0	60.0	80.0	80.0	−	−
45"		60.0	60.0	80.0	80.0	−	−
48"		60.0	60.0	80.0	80.0	−	−
51"		60.0	60.0	80.0	80.0	−	−
54"		60.0	60.0	80.0	80.0	−	−
57"		60.0	60.0	80.0	80.0	−	−

INTERPOLATION BETWEEN WIDTHS OR HEIGHTS ALLOWED.

NOTE:
GLASS CAPACITIES ON THIS SHEET ARE
BASED ON ASTM E1300-09 (3 SEC. GUSTS).

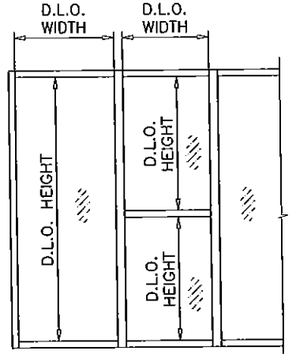

GLASS

Engr: JAVAD AHMAD
CIVIL
FLA PE # 70592
C.A.N. 3538

JUN 09 2014

Approved as complying with the Florida Building Code
Date July 3, 2014
NOA# 14.0415.06
Miami Dade Product Control
By Manuel Perez

AL-FAROOQ CORPORATION
ENGINEERS & PRODUCT DEVELOPMENT
1235 S.W. 87 AVE
MIAMI, FLORIDA 33174
TEL. (305) 264-8100 FAX. (305) 262-6978

COMP-ANL\W14-12AGP

SERIES FRONT SET ALUM WINDOWALL SYS. (L.M.I.)

Aldora Aluminum & Glass Products Inc.
11500 MIRAMAR PARKWAY SUITE 300
MIRAMAR, FL. 33025
TEL. (305) 888-6288 FAX. (305) 888-6289

revisions:

no	date	by	description

date: 03-21-14
scale: -
dr. by: HAMID
chk. by:

drawing no. W14-12

sheet 3 of 19

DESIGN LOAD CAPACITY – PSF MULLION WITHOUT INTERMEDIATE HORIZONTALS			
NOMINAL DIMS.		MULLION 'M1' JAMB 'J1'	
WIDTH (W)	FRAME HEIGHT	EXT.(+)	INT.(–)
30"	84"	90.0	90.0
36"		90.0	90.0
42"		90.0	90.0
48"		90.0	90.0
54"		90.0	90.0
60"		90.0	90.0
61"		90.0	90.0
66"		80.0	80.0
72"		80.0	80.0
30"	90"	90.0	90.0
36"		90.0	90.0
42"		90.0	90.0
48"		90.0	90.0
54"		90.0	90.0
57"		87.9	87.9
60"		80.0	80.0
66"		80.0	80.0
72"		76.8	76.8
30"	96"	90.0	90.0
36"		90.0	90.0
42"		90.0	90.0
48"		85.6	85.6
54"		78.0	78.0
60"		72.2	72.2
66"		67.8	67.8
72"		64.5	64.5
30"	102"	90.0	90.0
36"		90.0	90.0
42"		83.3	83.3
48"		74.2	74.2
50"		71.7	71.7
54"		67.3	67.3
60"		62.1	62.1
66"		58.1	58.1
70"		55.9	55.9
30"	108"	90.0	90.0
36"		80.1	80.1
42"		69.8	69.8
48"		62.3	62.3
54"		56.7	56.7
60"		52.3	52.3
66"		48.9	48.9
30"	114"	80.0	80.0
36"		67.8	67.8
42"		59.0	59.0
48"		52.5	52.5
54"		47.6	47.6
60"		43.9	43.9
63"		42.3	42.3
30"	120"	68.9	68.9
36"		57.9	57.9
42"		50.3	50.3
48"		44.7	44.7
54"		40.5	40.5
60"		37.2	37.2

DESIGN LOAD CAPACITY – PSF MULLION WITHOUT INTERMEDIATE HORIZONTALS			
NOMINAL DIMS.		MULLION 'M2' JAMB 'J2'/'J2A'	
WIDTH (W)	FRAME HEIGHT	EXT.(+)	INT.(–)
30"	84"	120.0	135.0
36"		120.0	135.0
42"		120.0	135.0
48"		120.0	135.0
54"		120.0	135.0
60"		120.0	135.0
66"		80.0	80.0
72"		80.0	80.0
30"	90"	120.0	135.0
36"		120.0	135.0
42"		120.0	135.0
48"		120.0	135.0
54"		120.0	135.0
56"		120.0	135.0
60"		80.0	80.0
66"		80.0	80.0
72"		80.0	80.0
30"	96"	120.0	135.0
36"		120.0	135.0
42"		120.0	135.0
48"		120.0	135.0
52"		120.0	135.0
54"		80.0	80.0
60"		80.0	80.0
66"		80.0	80.0
72"		80.0	80.0
30"	102"	120.0	135.0
39"		120.0	135.0
42"		120.0	135.0
48"		120.0	135.0
49"		120.0	135.0
54"		80.0	80.0
60"		80.0	80.0
66"		80.0	80.0
72"		80.0	80.0
30"	108"	120.0	135.0
36"		120.0	135.0
42"		120.0	135.0
46"		120.0	135.0
48"		80.0	80.0
54"		80.0	80.0
60"		80.0	80.0
66"		80.0	80.0
72"		80.0	80.0

DESIGN LOAD CAPACITY – PSF MULLION WITHOUT INTERMEDIATE HORIZONTALS			
NOMINAL DIMS.		MULLION 'M2' JAMB 'J2'/'J2A'	
WIDTH (W)	FRAME HEIGHT	EXT.(+)	INT.(–)
30"	114"	120.0	135.0
36"		120.0	135.0
42"		120.0	135.0
44"		120.0	135.0
48"		80.0	80.0
54"		80.0	80.0
60"		80.0	80.0
66"		80.0	80.0
72"		80.0	80.0
30"	120"	120.0	135.0
36"		120.0	135.0
42"		120.0	134.5
48"		80.0	80.0
54"		80.0	80.0
60"		80.0	80.0
66"		80.0	80.0
72"		80.0	80.0
30"	126"	80.0	80.0
36"		80.0	80.0
42"		80.0	80.0
48"		80.0	80.0
54"		80.0	80.0
60"		80.0	80.0
66"		78.9	78.9
68"		77.1	77.1
30"	132"	80.0	80.0
36"		80.0	80.0
42"		80.0	80.0
48"		80.0	80.0
54"		80.0	80.0
60"		73.3	73.3
65"		68.7	68.7
30"	138"	80.0	80.0
36"		80.0	80.0
42"		80.0	80.0
48"		77.3	77.3
54"		69.7	69.7
60"		62.6	62.6
62"		61.9	61.9
30"	144"	80.0	80.0
36"		80.0	80.0
42"		76.7	76.7
48"		67.8	67.8
54"		61.0	61.0
60"		55.7	55.7

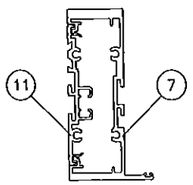

JAMB 'J1'

Ix IN^4	Sx IN^3
5.684	2.521

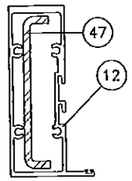

JAMB 'J2'

	Ix IN^4	Sx IN^3
ALUMINUM	4.027	1.788
STEEL	1.519	.760
TOTAL Ix ALUM + Ix STL X 2.9	8.432	

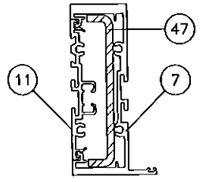

JAMB 'J2A'

	Ix IN^4	Sx IN^3
ALUMINUM	5.684	2.521
STEEL	1.519	.760
TOTAL Ix ALUM + Ix STL X 2.9	10.089	

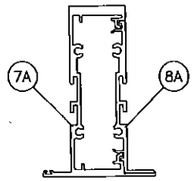

MULLION 'M1'

Ix IN^4	Sx IN^3
5.670	2.514

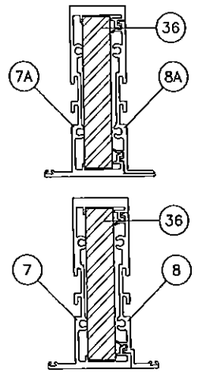

MULLION 'M2'

	Ix IN^4	Sx IN^3
ALUMINUM	5.670	2.514
STEEL	4.000	2.000
TOTAL Ix ALUM + Ix STL X 2.9	17.270	

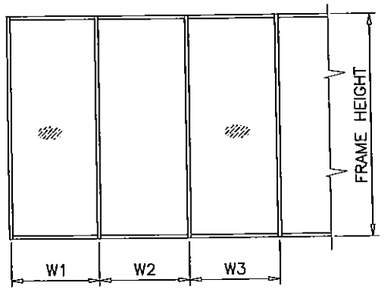

WIDTH (W) = W1
AT FRAME JAMB

WIDTH (W) = $\frac{W2 + W3}{2}$
AT FRAME MULLION

MULLIONS

Engr: JAVAD AHMAD
CIVIL
FLA. PE # 70592
C.A.N. 3538

JUN 09 2014

Approved as complying with the Florida Building Code
Date July 3 2014
NOA# 14-0415.06
Miami Dade Product Control
By Manuel Perez

AL-FAROOQ CORPORATION
ENGINEERS & PRODUCT DEVELOPMENT
1235 S.W. 87 AVE
MIAMI, FLORIDA 33174
TEL. (305) 264-8100 FAX. (305) 262-6978

COMP-ANL\W14-12AGP

SERIES FRONT SET ALUM WINDOWALL SYS. (L.M.I.)

Aldora Aluminum & Glass Products Inc.
11500 MIRAMAR PARKWAY SUITE 300
MIRAMAR, FL. 33025
TEL. (305) 888-6288 FAX. (305) 888-6289

revisions:

no	date	by	description

date: 03-21-14
scale: –
dr. by: HAMID
chk. by:

drawing no. W14-12

sheet 4 of 19

DESIGN LOAD CAPACITY – PSF MULLION WITHOUT INTERMEDIATE HORIZONTALS			
NOMINAL DIMS.		MULLION 'M3' JAMB 'J3'	
WIDTH (W)	FRAME HEIGHT	EXT.(+)	INT.(–)
30"	84"	90.0	90.0
36"		90.0	90.0
42"		90.0	90.0
48"		90.0	90.0
54"		90.0	90.0
60"		80.0	80.0
66"		80.0	80.0
72"		80.0	80.0
30"	90"	90.0	90.0
36"		90.0	90.0
42"		90.0	90.0
48"		90.0	90.0
51"		90.0	90.0
54"		80.0	80.0
60"		80.0	80.0
66"		80.0	80.0
72"		77.6	77.6
30"	96"	90.0	90.0
36"		90.0	90.0
42"		90.0	90.0
48"		86.5	86.5
54"		78.8	78.8
60"		73.0	73.0
66"		68.5	68.5
72"		62.5	62.5
30"	102"	80.0	80.0
36"		80.0	80.0
42"		80.0	80.0
48"		75.0	75.0
54"		68.1	68.1
60"		62.8	62.8
66"		58.7	58.7
70"		56.5	56.5
30"	108"	80.0	80.0
36"		80.0	80.0
42"		71.6	71.6
48"		63.9	63.9
54"		58.1	58.1
60"		53.6	53.6
66"		50.2	50.2
30"	114"	80.0	80.0
36"		69.5	69.5
42"		50.5	50.5
48"		53.9	53.9
54"		48.8	48.8
60"		45.0	45.0
63"		43.4	43.4
30"	120"	70.5	70.5
36"		59.4	59.4
42"		51.6	51.6
48"		45.8	45.8
54"		41.5	41.5
60"		38.1	38.1

DESIGN LOAD CAPACITY – PSF MULLION WITHOUT INTERMEDIATE HORIZONTALS			
NOMINAL DIMS.		MULLION 'M4' JAMB 'J4'	
WIDTH (W)	FRAME HEIGHT	EXT.(+)	INT.(–)
30"	84"	100.0	100.0
36"		100.0	100.0
42"		100.0	100.0
48"		100.0	100.0
54"		100.0	100.0
60"		100.0	100.0
66"		60.0	60.0
72"		60.0	60.0
30"	90"	100.0	100.0
36"		100.0	100.0
42"		100.0	100.0
48"		100.0	100.0
54"		100.0	100.0
56"		100.0	100.0
60"		60.0	60.0
66"		60.0	60.0
72"		60.0	60.0
30"	96"	100.0	100.0
36"		100.0	100.0
42"		100.0	100.0
48"		100.0	100.0
52"		100.0	100.0
54"		60.0	60.0
60"		60.0	60.0
66"		60.0	60.0
72"		60.0	60.0
30"	102"	100.0	100.0
39"		100.0	100.0
42"		100.0	100.0
48"		100.0	100.0
49"		100.0	100.0
54"		60.0	60.0
60"		60.0	60.0
66"		60.0	60.0
72"		60.0	60.0
30"	108"	100.0	100.0
36"		100.0	100.0
42"		100.0	100.0
46"		98.7	98.7
48"		60.0	60.0
54"		60.0	60.0
60"		60.0	60.0
66"		60.0	60.0
72"		60.0	60.0

DESIGN LOAD CAPACITY – PSF MULLION WITHOUT INTERMEDIATE HORIZONTALS			
NOMINAL DIMS.		MULLION 'M4' JAMB 'J4'	
WIDTH (W)	FRAME HEIGHT	EXT.(+)	INT.(–)
30"	114"	100.0	100.0
36"		100.0	100.0
42"		95.5	95.5
44"		91.5	91.5
48"		60.0	60.0
54"		60.0	60.0
60"		60.0	60.0
66"		60.0	60.0
72"		60.0	60.0
30"	120"	100.0	100.0
36"		99.0	99.0
42"		85.8	85.8
48"		60.0	60.0
54"		60.0	60.0
60"		60.0	60.0
66"		58.2	58.2
72"		54.5	54.5
30"	126"	60.0	60.0
36"		60.0	60.0
42"		60.0	60.0
48"		60.0	60.0
54"		60.0	60.0
60"		56.5	56.5
66"		52.2	52.2
72"		51.0	51.0
30"	132"	60.0	60.0
36"		60.0	60.0
42"		60.0	60.0
48"		60.0	60.0
54"		56.0	56.0
60"		51.1	51.1
65"		47.8	47.8
30"	138"	60.0	60.0
36"		60.0	60.0
42"		60.0	60.0
48"		56.8	56.8
54"		51.1	51.1
60"		46.5	46.5
62"		45.2	45.2
30"	144"	60.0	60.0
36"		60.0	60.0
42"		58.8	58.8
48"		52.0	52.0
54"		46.6	46.6
60"		42.4	42.4

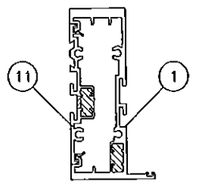

JAMB 'J3'

Ix IN^4	Sx IN^3
5.813	2.538

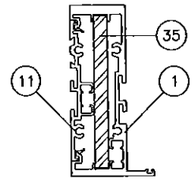

JAMB 'J4'

	Ix IN^4	Sx IN^3
ALUMINUM	5.813	2.538
STEEL	2.000	1.000
TOTAL Ix ALUM + Ix STL X 2.9	11.613	

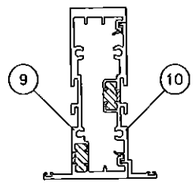

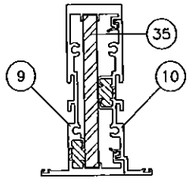

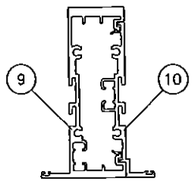

MULLION 'M3'

Ix IN^4	Sx IN^3
5.813	2.529

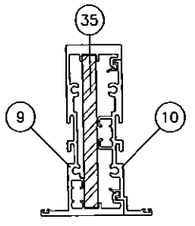

MULLION 'M4'

	Ix IN^4	Sx IN^3
ALUMINUM	5.813	2.529
STEEL	2.000	1.000
TOTAL Ix ALUM + Ix STL X 2.9	11.613	

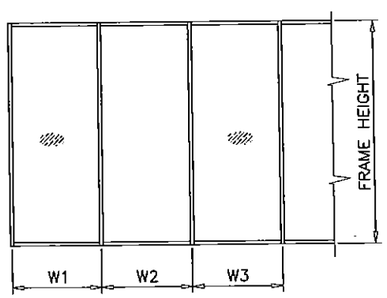

WIDTH (W) = W1
AT FRAME JAMB

WIDTH (W) = $\frac{W2 + W3}{2}$
AT FRAME MULLION

MULLIONS

Engr: JAVAD AHMAD
CIVIL
FLA. PE # 70592
C.A.N. 3538

JUN 09 2014

Approved as complying with the Florida Building Code
Date July 3, 2014
NOA# 14-0415.06
Miami Dade Product Control
By

AL-FAROOQ CORPORATION
ENGINEERS & PRODUCT DEVELOPMENT
1235 S.W. 87 AVE
MIAMI, FLORIDA 33174
TEL (305) 264-8100 FAX. (305) 262-6978

COMP-ANL\W14-12AGP

SERIES FRONT SET ALUM WINDOWALL SYS. (L.M.I.)

Aldora Aluminum & Glass Products Inc.
11500 MIRAMAR PARKWAY SUITE 300
MIRAMAR, FL. 33025
TEL. (305) 888-6289 FAX. (305) 888-6288

revisions:			
no	date	by	description

date: 03-21-14
scale: –
dr. by: HAMID
chk. by:

drawing no.
W14-12

sheet 5 of 19

DESIGN LOAD CAPACITY – PSF
MULLION
WITH INTERMEDIATE HORIZONTALS

NOMINAL DIMS.		MULLION 'M1' JAMB 'J1'	
WIDTH (W)	FRAME HEIGHT	EXT.(+)	INT.(–)
30"	84"	90.0	90.0
36"		90.0	90.0
42"		90.0	90.0
48"		90.0	90.0
54"		90.0	90.0
60"		85.3	85.3
61"		83.9	83.9
66"		76.6	76.6
72"		70.2	70.2
30"	90"	90.0	90.0
36"		90.0	90.0
42"		90.0	90.0
48"		90.0	90.0
54"		81.5	81.5
57"		77.2	77.2
60"		72.5	72.5
66"		65.9	65.9
72"		60.4	60.4
30"	96"	90.0	90.0
36"		90.0	90.0
42"		90.0	90.0
48"		79.7	79.7
54"		70.8	70.8
60"		62.9	62.9
66"		57.2	57.2
72"		52.4	52.4
30"	102"	90.0	90.0
36"		90.0	90.0
42"		78.2	78.2
48"		68.4	68.4
50"		65.7	65.7
54"		60.8	60.8
60"		54.7	54.7
66"		49.7	49.7
70"		46.9	46.9
30"	108"	90.0	90.0
36"		76.8	76.8
42"		65.8	65.8
48"		57.6	57.6
54"		51.2	51.2
60"		46.1	46.1
66"		41.9	41.9
30"	114"	78.4	78.4
36"		65.3	65.3
42"		56.0	56.0
48"		49.0	49.0
54"		43.5	43.5
60"		39.2	39.2
63"		37.3	37.3
30"	120"	67.2	67.2
36"		56.0	56.0
42"		48.0	48.0
48"		42.0	42.0
54"		37.3	37.3
60"		33.6	33.6

DESIGN LOAD CAPACITY – PSF
MULLION
WITH INTERMEDIATE HORIZONTALS

NOMINAL DIMS.		MULLION 'M2' JAMB 'J2'/'J2A'	
WIDTH (W)	FRAME HEIGHT	EXT.(+)	INT.(–)
30"	84"	120.0	135.0
36"		120.0	135.0
42"		120.0	135.0
48"		120.0	135.0
54"		120.0	135.0
60"		120.0	135.0
66"		80.0	80.0
72"		80.0	80.0
30"	90"	120.0	135.0
36"		120.0	135.0
42"		120.0	135.0
48"		120.0	135.0
54"		120.0	135.0
56"		120.0	135.0
60"		80.0	80.0
66"		80.0	80.0
72"		80.0	80.0
30"	96"	120.0	135.0
36"		120.0	135.0
42"		120.0	135.0
48"		120.0	135.0
52"		120.0	135.0
54"		80.0	80.0
60"		80.0	80.0
66"		80.0	80.0
72"		80.0	80.0
30"	102"	120.0	135.0
39"		120.0	135.0
42"		120.0	135.0
48"		120.0	135.0
49"		120.0	135.0
54"		80.0	80.0
60"		80.0	80.0
66"		80.0	80.0
72"		80.0	80.0
30"	108"	120.0	135.0
36"		120.0	135.0
42"		120.0	135.0
46"		120.0	135.0
48"		80.0	80.0
54"		80.0	80.0
60"		80.0	80.0
66"		80.0	80.0
72"		80.0	80.0

DESIGN LOAD CAPACITY – PSF
MULLION
WITH INTERMEDIATE HORIZONTALS

NOMINAL DIMS.		MULLION 'M2' JAMB 'J2'/'J2A'	
WIDTH (W)	FRAME HEIGHT	EXT.(+)	INT.(–)
30"	114"	120.0	135.0
36"		120.0	135.0
42"		120.0	135.0
44"		120.0	135.0
48"		80.0	80.0
54"		80.0	80.0
60"		80.0	80.0
66"		80.0	80.0
72"		80.0	80.0
30"	120"	120.0	135.0
36"		120.0	135.0
42"		128.3	128.3
48"		80.0	80.0
54"		80.0	80.0
60"		80.0	80.0
66"		80.0	80.0
72"		74.8	74.8
30"	126"	80.0	80.0
36"		80.0	80.0
42"		80.0	80.0
48"		80.0	80.0
54"		80.0	80.0
60"		77.5	77.5
66"		70.5	70.5
68"		68.5	68.5
30"	132"	80.0	80.0
36"		80.0	80.0
42"		80.0	80.0
48"		80.0	80.0
54"		75.0	75.0
60"		67.5	67.5
65"		62.3	62.3
30"	138"	80.0	80.0
36"		80.0	80.0
42"		80.0	80.0
48"		73.8	73.8
54"		65.6	65.6
60"		59.1	59.1
62"		57.1	57.1
30"	144"	80.0	80.0
36"		80.0	80.0
42"		74.2	74.2
48"		65.0	65.0
54"		57.7	57.7
60"		52.0	52.0

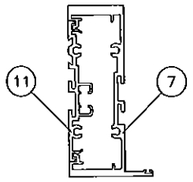

JAMB 'J1'

Ix IN^4	Sx IN^3
5.684	2.521

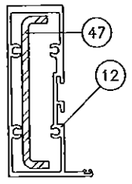

JAMB 'J2'

	Ix IN^4	Sx IN^3
ALUMINUM	4.027	1.788
STEEL	1.519	.760
TOTAL Ix ALUM + Ix STL X 2.9	8.432	

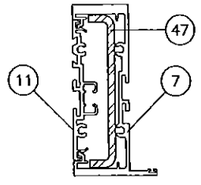

JAMB 'J2A'

	Ix IN^4	Sx IN^3
ALUMINUM	5.684	2.521
STEEL	1.519	.760
TOTAL Ix ALUM + Ix STL X 2.9	10.089	

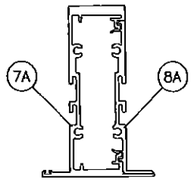

MULLION 'M1'

Ix IN^4	Sx IN^3
5.670	2.514

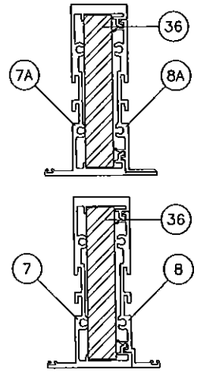

MULLION 'M2'

	Ix IN^4	Sx IN^3
ALUMINUM	5.670	2.514
STEEL	4.000	2.000
TOTAL Ix ALUM + Ix STL X 2.9	17.270	

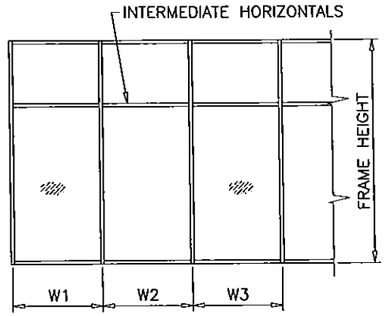

WIDTH (W) = W1
AT FRAME JAMB

WIDTH (W) = $\frac{W2 + W3}{2}$
AT FRAME MULLION

MULLIONS

Engr: JAVAD AHMAD
CIVIL
FLA. PE # 70592
C.A.N. 3538

JUN 09 2014

Approved as complying with the Florida Building Code
Date JUN 3 2014
NOA# 14-0415.06
Miami Dade Product Control
By Manuel Perez

AL-FAROOQ CORPORATION
ENGINEERS & PRODUCT DEVELOPMENT
1235 S.W. 87 AVE
MIAMI, FLORIDA 33174
TEL. (305) 264-8100 FAX. (305) 262-6978

COMP-ANL\W14-12AGP

SERIES FRONT SET ALUM WINDOWALL SYS. (L.M.I.)

Aldora Aluminum & Glass Products Inc.
11500 MIRAMAR PARKWAY SUITE 300
MIRAMAR, FL. 33025
TEL. (305) 888-6288 FAX. (305) 888-6289

revisions:

no	date	by	description

date: 03-21-14
scale: –
dr. by: HAMID
chk. by:

drawing no. W14-12

DESIGN LOAD CAPACITY – PSF MULLION WITH INTERMEDIATE HORIZONTALS			
NOMINAL DIMS.		MULLION 'M3' JAMB 'J3'	
WIDTH (W)	FRAME HEIGHT	EXT.(+)	INT.(–)
30"	84"	90.0	90.0
36"		90.0	90.0
42"		90.0	90.0
48"		90.0	90.0
54"		90.0	90.0
60"		80.0	80.0
66"		77.4	77.4
72"		70.9	70.9
30"	90"	90.0	90.0
36"		90.0	90.0
42"		90.0	90.0
48"		90.0	90.0
51"		87.2	87.2
54"		80.0	80.0
60"		73.2	73.2
66"		66.6	66.6
72"		61.0	61.0
30"	96"	90.0	90.0
36"		90.0	90.0
42"		90.0	90.0
48"		81.5	81.5
54"		70.7	70.7
60"		63.6	63.6
66"		57.8	57.8
72"		53.0	53.0
30"	102"	80.0	80.0
36"		80.0	80.0
42"		80.0	80.0
48"		70.1	70.1
54"		62.3	62.3
60"		56.1	56.1
66"		51.0	51.0
70"		48.1	48.1
30"	108"	80.0	80.0
36"		78.8	78.8
42"		67.5	67.5
48"		59.1	59.1
54"		52.5	52.5
60"		47.3	47.3
66"		43.0	43.0
30"	114"	80.0	80.0
36"		67.0	67.0
42"		57.4	57.4
48"		50.2	50.2
54"		44.6	44.6
60"		40.2	40.2
63"		38.3	38.3
30"	120"	68.9	68.9
36"		57.4	57.4
42"		49.2	49.2
48"		43.1	43.1
54"		38.3	38.3
60"		34.4	34.4

DESIGN LOAD CAPACITY – PSF MULLION WITH INTERMEDIATE HORIZONTALS			
NOMINAL DIMS.		MULLION 'M4' JAMB 'J4'	
WIDTH (W)	FRAME HEIGHT	EXT.(+)	INT.(–)
30"	84"	100.0	100.0
36"		100.0	100.0
42"		100.0	100.0
48"		100.0	100.0
54"		100.0	100.0
60"		100.0	100.0
66"		60.0	60.0
72"		60.0	60.0
30"	90"	100.0	100.0
36"		100.0	100.0
42"		100.0	100.0
48"		100.0	100.0
54"		100.0	100.0
56"		100.0	100.0
60"		60.0	60.0
66"		60.0	60.0
72"		60.0	60.0
30"	96"	100.0	100.0
36"		100.0	100.0
42"		100.0	100.0
48"		100.0	100.0
52"		100.0	100.0
54"		60.0	60.0
60"		60.0	60.0
66"		60.0	60.0
72"		60.0	60.0
30"	102"	100.0	100.0
39"		100.0	100.0
42"		100.0	100.0
48"		99.8	99.8
49"		97.7	97.7
54"		60.0	60.0
60"		60.0	60.0
66"		60.0	60.0
72"		60.0	60.0
30"	108"	100.0	100.0
36"		100.0	100.0
42"		100.0	100.0
46"		92.9	92.9
48"		60.0	60.0
54"		60.0	60.0
60"		60.0	60.0
66"		60.0	60.0
72"		60.0	60.0

DESIGN LOAD CAPACITY – PSF MULLION WITH INTERMEDIATE HORIZONTALS			
NOMINAL DIMS.		MULLION 'M4' JAMB 'J4'	
WIDTH (W)	FRAME HEIGHT	EXT.(+)	INT.(–)
30"	114"	100.0	100.0
36"		100.0	100.0
42"		91.3	91.3
44"		87.1	87.1
48"		60.0	60.0
54"		60.0	60.0
60"		60.0	60.0
66"		58.1	58.1
72"		53.2	53.2
30"	120"	100.0	100.0
36"		96.1	96.1
42"		82.4	82.4
48"		60.0	60.0
54"		60.0	60.0
60"		57.7	57.7
66"		52.4	52.4
72"		48.1	48.1
30"	126"	60.0	60.0
36"		60.0	60.0
42"		60.0	60.0
48"		60.0	60.0
54"		58.1	58.1
60"		52.3	52.3
66"		47.5	47.5
72"		46.2	46.2
30"	132"	60.0	60.0
36"		60.0	60.0
42"		60.0	60.0
48"		59.3	59.3
54"		53.0	53.0
60"		47.7	47.7
65"		44.0	44.0
30"	138"	60.0	60.0
36"		60.0	60.0
42"		60.0	60.0
48"		54.5	54.5
54"		48.4	48.4
60"		43.6	43.6
62"		42.2	42.2
30"	144"	60.0	60.0
36"		60.0	60.0
42"		56.9	56.9
48"		49.8	49.8
54"		44.3	44.3
60"		39.8	39.8

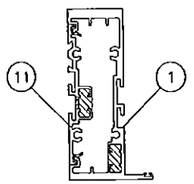

JAMB 'J3'

Ix IN^4	Sx IN^3
5.813	2.538

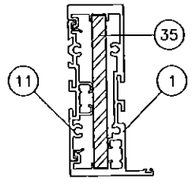

JAMB 'J4'

	Ix IN^4	Sx IN^3
ALUMINUM	5.813	2.538
STEEL	2.000	1.000
TOTAL Ix ALUM + Ix STL X 2.9	11.613	

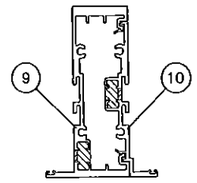

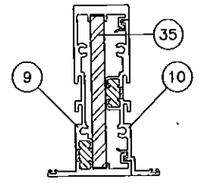

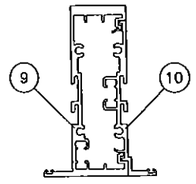

MULLION 'M3'

Ix IN^4	Sx IN^3
5.813	2.529

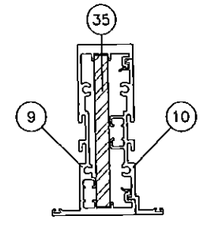

MULLION 'M4'

	Ix IN^4	Sx IN^3
ALUMINUM	5.813	2.529
STEEL	2.000	1.000
TOTAL Ix ALUM + Ix STL X 2.9	11.613	

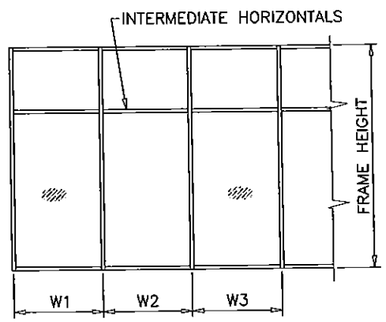

WIDTH (W) = W1
AT FRAME JAMB

WIDTH (W) = $\frac{W2 + W3}{2}$
AT FRAME MULLION

MULLIONS

Engr: JAVAD AHMAD
CIVIL
FLA. PE # 70592
C.A.N. 3538

JUN 09 2014

Approved as complying with the Florida Building Code
Date July 3, 2014
NOA# 14-0415.06
Miami Dade Product Control
By: Manuel Perez

AL-FAROOQ CORPORATION
ENGINEERS & PRODUCT DEVELOPMENT
1235 S.W. 87 AVE
MIAMI, FLORIDA 33174
TEL. (305) 264-8100 FAX. (305) 262-6978

COMP-ANL\W14-12AGP

SERIES FRONT SET ALUM WINDOWALL SYS. (L.M.I.)

Aldora Aluminum & Glass Products Inc.
11500 MIRAMAR PARKWAY SUITE 300
MIRAMAR, FL. 33025
TEL. (305) 888-6289 FAX. (305) 888-6288

revisions:			
no	date	by	description

date: 03-21-14
scale: –
dr. by: HAMID
chk. by:

drawing no. W14-12

WOOD BUCKS AND METAL STRUCTURE NOT BY ALDORA MUST SUSTAIN LOADS IMPOSED BY GLAZING SYSTEM AND TRANSFER THEM TO THE BUILDING STRUCTURE.

TYPICAL ANCHORS: SEE ELEV. FOR SPACING

TYPE 'AW'– 1/4" DIA ULTRACON BY 'ELCO' (Fu=177 KSI, Fy=155 KSI)
INTO 2BY WOOD BUCKS OR WOOD STRUCTURES
WITH 1–1/2" MIN. PENETRATION INTO WOOD

THRU 1BY WOOD BUCKS INTO CONCRETE OR MASONRY
WITH 1–1/2" MIN. EMBED INTO CONCRETE (HEAD/SILL/JAMBS)
WITH 1–1/4" MIN. EMBED INTO MASONRY (JAMBS)

TYPE 'AC'– 1/4" DIA ULTRACON BY 'ELCO' (Fu=177 KSI, Fy=155 KSI)
DIRECTLY INTO CONCRETE OR MASONRY
WITH 1–1/2" MIN. EMBED INTO CONCRETE (HEAD/SILL/JAMBS)
WITH 1–1/4" MIN. EMBED INTO MASONRY (JAMBS)

ANCHOR EDGE DISTANCES
INTO CONCRETE AND MASONRY = 2–1/2" MIN.
INTO WOOD STRUCTURE = 1" MIN.

TYPE 'BW'– 5/16" DIA ULTRACON BY 'ELCO' (Fu=177 KSI, Fy=155 KSI)
INTO 2BY WOOD BUCKS OR WOOD STRUCTURES
WITH 1–1/2" MIN. PENETRATION INTO WOOD

THRU 1BY WOOD BUCKS INTO CONCRETE OR MASONRY
WITH 1–1/2" MIN. EMBED INTO CONCRETE (HEAD/SILL/JAMBS)
WITH 1–1/4" MIN. EMBED INTO MASONRY (JAMBS)

TYPE 'BC'– 5/16" DIA ULTRACON BY 'ELCO' (Fu=177 KSI, Fy=155 KSI)
DIRECTLY INTO CONCRETE OR MASONRY
WITH 1–1/2" MIN. EMBED INTO CONCRETE (HEAD/SILL/JAMBS)
WITH 1–1/4" MIN. EMBED INTO MASONRY (JAMBS)

ANCHOR EDGE DISTANCES
INTO CONCRETE AND MASONRY = 2–1/2" MIN.
INTO WOOD STRUCTURE = 1–1/2" MIN.

TYPE 'CM'– #14 SELF DRILLING SCREWS ST/ST (GRADE 5 CRS)
INTO METAL STRUCTURES
STEEL : 1/8" THK. MIN. (Fy = 36 KSI MIN.)
ALUMINUM : 1/8" THK. MIN. (6063–T5 MIN.)
(STEEL IN CONTACT WITH ALUMINUM TO BE PLATED OR PAINTED)

ANCHOR EDGE DISTANCES
INTO METAL STRUCTURE = 1/2" MIN.

CONCRETE AT HEAD, SILL OR JAMBS f'c = 3000 PSI MIN.
C–90 HOLLOW/FILLED BLOCK AT JAMBS f'm = 2000 PSI MIN.

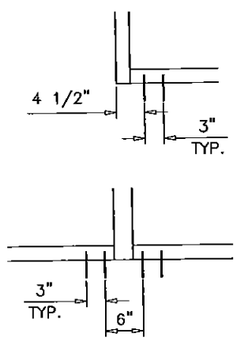

AW2, AC2, BW2, BC2, CM2

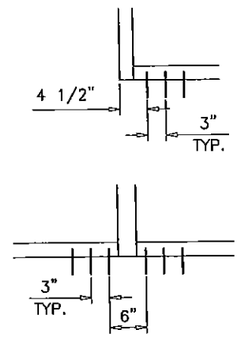

AW3, AC3, BW3, BC3, CM3

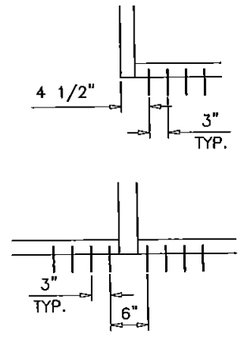

AW4, AC4, BW4, CM4

ANCHORS TYPES:

AW2 = (2) ANCHORS TYPE 'AW' AT EACH SIDE OF JAMB AND MULLION
AC2 = (2) ANCHORS TYPE 'AC' AT EACH SIDE OF JAMB AND MULLION
BW2 = (2) ANCHORS TYPE 'BW' AT EACH SIDE OF JAMB AND MULLION
BC2 = (2) ANCHORS TYPE 'BC' AT EACH SIDE OF JAMB AND MULLION
CM2 = (2) ANCHORS TYPE 'CM' AT EACH SIDE OF JAMB AND MULLION

AW3 = (3) ANCHORS TYPE 'AW' AT EACH SIDE OF JAMB AND MULLION
AC3 = (3) ANCHORS TYPE 'AC' AT EACH SIDE OF JAMB AND MULLION
BW3 = (3) ANCHORS TYPE 'BW' AT EACH SIDE OF JAMB AND MULLION
BC3 = (3) ANCHORS TYPE 'BC' AT EACH SIDE OF JAMB AND MULLION
CM3 = (3) ANCHORS TYPE 'CM' AT EACH SIDE OF JAMB AND MULLION

AW4 = (4) ANCHORS TYPE 'AW' AT EACH SIDE OF JAMB AND MULLION
AC4 = (4) ANCHORS TYPE 'AC' AT EACH SIDE OF JAMB AND MULLION
BW4 = (4) ANCHORS TYPE 'BW' AT EACH SIDE OF JAMB AND MULLION
CM4 = (4) ANCHORS TYPE 'CM' AT EACH SIDE OF JAMB AND MULLION

SEE SHEETS 9 & 10 FOR ANCHOR CAPACITIES.

ANCHORS

Engr: JAVAD AHMAD
CIVIL
FLA. PE # 70592
C.A.N. 3538
JUN 09 2014

Approved as complying with the Florida Building Code
Date July 3 2014
NOA# 14-0415.06
Miami Dade Product Control
By

AL-FAROOQ CORPORATION
ENGINEERS & PRODUCT DEVELOPMENT
1235 S.W. 87 AVE
MIAMI, FLORIDA 33174
TEL. (305) 264-8100 FAX. (305) 262-6978

COMP–ANL\W14–12AGP

SERIES FRONT SET ALUM WINDOWALL SYS. (L.M.I.)

Aldora Aluminum & Glass Products Inc.
11500 MIRAMAR PARKWAY SUITE 300
MIRAMAR, FL. 33025
TEL. (305) 888–6288 FAX. (305) 888–6289

revisions:

no	date	by	description

date: 03–21–14
scale: –
dr. by: HAMID
chk. by:

drawing no. W14–12

sheet 8 of 19

ANCHOR LOAD CAPACITY – PSF
EXT.(+) & INT.(–)

NOMINAL DIMS.		ANCHORS TYPE 'AW'						ANCHORS TYPE 'AC'					
		3/8" MAX. SHIMS			1/4" MAX. SHIMS			3/8" MAX. SHIMS			1/4" MAX. SHIMS		
WIDTH (W)	FRAME HEIGHT	AW2	AW3	AW4	AW2	AW3	AW4	AC2	AC3	AC4	AC2	AC3	AC4
30"	96"	99.1	135.0	135.0	118.0	135.0	135.0	99.1	135.0	135.0	135.0	135.0	135.0
36"		85.7	128.6	135.0	102.2	135.0	135.0	85.7	128.6	135.0	135.0	135.0	135.0
42"		76.4	114.7	135.0	91.1	135.0	135.0	76.4	114.7	135.0	122.1	135.0	135.0
48"		69.7	104.5	135.0	83.0	124.5	135.0	69.7	104.5	135.0	111.3	135.0	135.0
52"		66.1	99.2	132.3	78.8	118.2	135.0	66.1	99.2	132.3	105.7	135.0	135.0
54"		64.6	96.9	129.2	77.0	115.5	135.0	64.6	96.9	129.2	103.3	135.0	135.0
60"		60.8	91.2	121.6	72.4	108.7	135.0	60.8	91.2	121.6	97.2	135.0	135.0
66"		57.9	86.9	115.8	69.0	103.5	135.0	57.9	86.9	115.8	92.5	135.0	135.0
72"		55.7	83.6	111.5	66.4	99.6	132.8	55.7	83.6	111.5	89.1	133.6	135.0
30"	102"	92.2	135.0	135.0	109.9	135.0	135.0	92.2	135.0	135.0	135.0	135.0	135.0
36"		79.6	119.4	135.0	94.9	135.0	135.0	79.6	119.4	135.0	127.2	135.0	135.0
42"		70.8	106.2	135.0	84.3	126.5	135.0	70.8	106.2	135.0	113.1	135.0	135.0
48"		64.3	96.5	128.6	76.6	114.9	135.0	64.3	96.5	128.6	102.8	135.0	135.0
52"		60.9	91.4	121.8	72.6	108.9	135.0	60.9	91.4	121.8	97.4	135.0	135.0
54"		59.4	89.2	118.9	70.8	106.2	135.0	59.4	89.2	118.9	95.0	135.0	135.0
60"		55.7	83.6	111.5	66.4	99.6	132.8	55.7	83.6	111.5	89.1	133.6	135.0
66"		52.9	79.3	105.7	63.0	94.5	126.0	52.9	79.3	105.7	84.5	126.7	135.0
72"		50.7	76.0	101.3	60.4	90.5	120.7	50.7	76.0	101.3	81.0	121.5	135.0
30"	108"	86.3	129.4	135.0	102.8	135.0	135.0	86.3	129.4	135.0	135.0	135.0	135.0
36"		74.3	111.5	135.0	88.5	132.8	135.0	74.3	111.5	135.0	118.8	135.0	135.0
42"		65.9	98.8	131.8	78.5	117.8	135.0	65.9	98.8	131.8	105.3	135.0	135.0
48"		59.7	89.6	119.4	71.1	106.7	135.0	59.7	89.6	119.4	95.4	135.0	135.0
52"		56.5	84.7	112.9	67.3	100.9	134.5	56.5	84.7	112.9	90.2	135.0	135.0
54"		55.0	82.6	110.1	65.6	98.4	131.2	55.0	82.6	110.1	88.0	132.0	135.0
60"		51.4	77.2	102.9	61.3	91.9	122.6	51.4	77.2	102.9	82.2	123.3	135.0
66"		48.6	73.0	97.3	57.9	86.9	115.9	48.6	73.0	97.3	77.7	116.6	135.0
72"		46.4	69.7	92.9	55.3	83.0	110.7	46.4	69.7	92.9	74.2	111.3	135.0
30"	114"	81.1	121.6	135.0	96.6	135.0	135.0	81.1	121.6	135.0	129.6	135.0	135.0
36"		69.7	104.5	135.0	83.0	124.5	135.0	69.7	104.5	135.0	111.3	135.0	135.0
42"		61.6	92.5	123.3	73.4	110.2	135.0	61.6	92.5	123.3	98.5	135.0	135.0
48"		55.7	83.6	111.5	66.4	99.6	132.8	55.7	83.6	111.5	89.1	133.6	135.0
52"		52.6	78.9	105.2	62.7	94.0	125.4	52.6	78.9	105.2	84.1	126.1	135.0
54"		51.2	76.9	102.5	61.1	91.6	122.1	51.2	76.9	102.5	81.9	122.9	135.0
60"		47.8	71.7	95.5	56.9	85.4	113.8	47.8	71.7	95.5	76.3	114.5	135.0
66"		45.0	67.6	90.1	53.7	80.5	107.3	45.0	67.6	90.1	72.0	108.0	135.0
72"		42.9	64.3	85.7	51.1	76.6	102.2	42.9	64.3	85.7	68.5	102.8	135.0
30"	120"	76.4	114.7	135.0	91.1	135.0	135.0	76.4	114.7	135.0	122.1	135.0	135.0
36"		65.6	98.4	131.1	78.1	117.2	135.0	65.6	98.4	131.1	104.8	135.0	135.0
42"		57.9	86.9	115.8	69.0	103.5	135.0	57.9	86.9	115.8	92.5	135.0	135.0
48"		52.3	78.4	104.5	62.3	93.4	124.5	52.3	78.4	104.5	83.5	125.3	135.0
52"		49.3	73.9	98.5	58.7	88.0	117.4	49.3	73.9	98.5	78.7	118.1	135.0
54"		47.9	71.9	95.9	57.1	85.7	114.2	47.9	71.9	95.9	76.6	114.9	135.0
60"		44.6	66.9	89.2	53.1	79.7	106.2	44.6	66.9	89.2	71.3	106.9	135.0
66"		41.9	62.9	83.9	50.0	74.9	99.9	41.9	62.9	83.9	67.0	100.5	134.0
72"		39.8	59.7	79.6	47.4	71.1	94.9	39.8	59.7	79.6	63.6	95.4	127.2
30"	126"	72.3	108.5	135.0	86.1	129.2	135.0	72.3	108.5	135.0	115.5	135.0	135.0
36"		61.9	92.9	123.9	73.8	110.7	135.0	61.9	92.9	123.9	99.0	135.0	135.0
42"		54.6	81.9	109.2	65.0	97.6	130.1	54.6	81.9	109.2	87.2	130.9	135.0
48"		49.2	73.8	98.4	58.6	87.9	117.2	49.2	73.8	98.4	78.6	117.9	135.0
52"		46.3	69.5	92.6	55.2	82.7	110.3	46.3	69.5	92.6	74.0	111.0	135.0
54"		45.0	67.6	90.1	53.7	80.5	107.3	45.0	67.6	90.1	72.0	108.0	135.0
60"		41.8	62.7	83.6	49.8	74.7	99.6	41.8	62.7	83.6	66.8	100.2	133.6
66"		39.2	58.8	78.5	46.7	70.1	93.5	39.2	58.8	78.5	62.7	94.0	125.4

ANCHOR LOAD CAPACITY – PSF
EXT.(+) & INT.(–)

NOMINAL DIMS.		ANCHORS TYPE 'AW'						ANCHORS TYPE 'AC'					
		3/8" MAX. SHIMS			1/4" MAX. SHIMS			3/8" MAX. SHIMS			1/4" MAX. SHIMS		
WIDTH (W)	FRAME HEIGHT	AW2	AW3	AW4	AW2	AW3	AW4	AC2	AC3	AC4	AC2	AC3	AC4
30"	132"	68.6	102.9	135.0	81.7	122.6	163.4	68.6	102.9	135.0	109.6	135.0	135.0
36"		58.7	88.0	117.3	69.9	104.8	139.8	58.7	88.0	117.3	93.8	135.0	135.0
42"		51.6	77.5	103.3	61.5	92.3	123.1	51.6	77.5	103.3	82.5	123.8	135.0
48"		46.4	69.7	92.9	55.3	83.0	110.7	46.4	69.7	92.9	74.2	111.3	135.0
52"		43.7	65.5	87.4	52.0	78.1	104.1	43.7	65.5	87.4	69.8	104.7	135.0
54"		42.5	63.7	84.9	50.6	75.9	101.2	42.5	63.7	84.9	67.9	101.8	135.0
60"		39.3	59.0	78.7	46.9	70.3	93.7	39.3	59.0	78.7	62.9	94.3	125.7
30"	138"	65.2	97.9	130.5	77.7	116.6	155.5	65.2	97.9	130.5	104.3	135.0	135.0
36"		55.7	83.6	111.5	66.4	99.6	132.8	55.7	83.6	111.5	89.1	133.6	135.0
42"		49.0	73.5	98.0	58.4	87.6	116.7	49.0	73.5	98.0	78.3	117.5	135.0
48"		44.0	66.0	88.0	52.4	78.6	104.8	44.0	66.0	88.0	70.3	105.5	135.0
52"		41.3	62.0	82.7	49.3	73.9	98.5	41.3	62.0	82.7	66.1	99.1	132.1
54"		40.2	60.3	80.3	47.9	71.8	95.7	40.2	60.3	80.3	64.2	96.3	128.4
60"		37.2	55.7	74.3	44.3	66.4	88.5	37.2	55.7	74.3	59.4	89.1	118.8
30"	144"	62.2	93.3	124.4	74.1	111.2	148.2	62.2	93.3	124.4	99.4	135.0	135.0
36"		53.1	79.6	106.2	63.2	94.9	126.5	53.1	79.6	106.2	84.8	127.2	135.0
42"		46.6	69.9	93.2	55.5	83.3	111.1	46.6	69.9	93.2	74.5	111.7	135.0
48"		41.8	62.7	83.6	49.8	74.7	99.6	41.8	62.7	83.6	66.8	100.2	133.6
52"		39.2	58.9	78.5	46.7	70.1	93.5	39.2	58.9	78.5	62.7	94.1	125.4
54"		38.1	57.2	76.2	45.4	68.1	90.8	38.1	57.2	76.2	60.9	91.4	121.8
60"		35.2	52.8	70.4	41.9	62.9	83.9	35.2	52.8	70.4	56.3	84.4	112.5

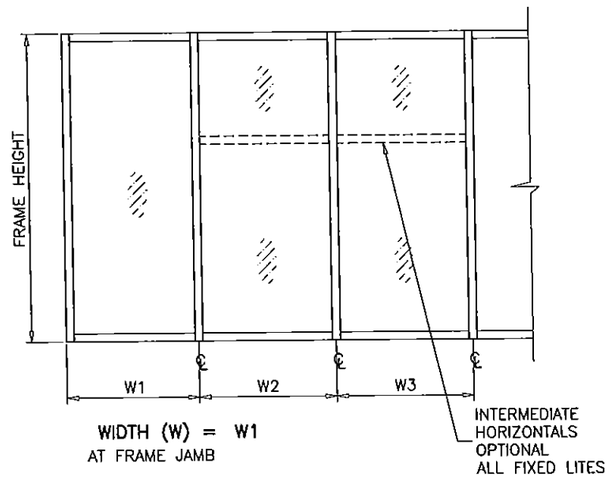

WIDTH (W) = W1
AT FRAME JAMB

WIDTH (W) = $\frac{W2 + W3}{2}$
AT FRAME MULLION

SEE SHEET 8 FOR ANCHOR TYPES.

ANCHORS

Engr: JAVAD AHMAD
CIVIL
FLA. PE # 70592
C.A.N. 3538

JUN 0 9 2014

Approved as complying with the Florida Building Code
Date 4/4/2014
NOA# 14-0415.06
Miami Dade Product Control
By

AL-FAROOQ CORPORATION
ENGINEERS & PRODUCT DEVELOPMENT
1235 S.W. 87 AVE
MIAMI, FLORIDA 33174
TEL. (305) 264-8100 FAX. (305) 262-6978

COMP-ANL\W14-12AGP

SERIES FRONT SET ALUM WINDOWALL SYS. (L.M.I.)

Aldora Aluminum & Glass Products Inc.
11500 MIRAMAR PARKWAY SUITE 300
MIRAMAR, FL. 33025
TEL. (305) 888-6288 FAX. (305) 888-6289

revisions:

no	date	by	description

date: 03-21-14
scale: -
dr. by: HAMID
chk. by:

drawing no. W14-12

ANCHOR LOAD CAPACITY – PSF
EXT.(+) & INT.(–)

NOMINAL DIMS.		ANCHORS TYPE 'BW' 3/8" MAX. SHIMS			ANCHORS TYPE 'BC' 3/8" SHIMS		ANCHORS TYPE 'BC' 1/4" SHIMS	ANCHORS TYPE 'CM' 3/8" MAX. SHIMS			ANCHORS TYPE 'CM' 1/4" SHIMS
WIDTH (W)	FRAME HEIGHT	BW2	BW3	BW4	BC2	BC3	BC2	CM2	CM3	CM4	CM2
30"	96"	135.0	135.0	135.0	135.0	135.0	135.0	118.0	135.0	135.0	135.0
36"		135.0	135.0	135.0	135.0	135.0	135.0	102.2	135.0	135.0	135.0
42"		123.6	135.0	135.0	135.0	135.0	135.0	91.1	135.0	135.0	135.0
48"		112.7	135.0	135.0	128.7	135.0	135.0	83.0	124.5	135.0	135.0
52"		107.0	135.0	135.0	122.2	135.0	135.0	78.8	118.2	135.0	135.0
54"		104.5	135.0	135.0	119.3	135.0	135.0	77.0	115.5	135.0	135.0
60"		98.3	135.0	135.0	112.3	135.0	135.0	72.4	108.7	135.0	135.0
66"		93.6	135.0	135.0	106.9	135.0	135.0	69.0	103.5	135.0	135.0
72"		90.1	135.0	135.0	102.9	135.0	135.0	66.4	99.6	132.8	133.3
30"	102"	135.0	135.0	135.0	135.0	135.0	135.0	109.9	135.0	135.0	135.0
36"		128.8	135.0	135.0	135.0	135.0	135.0	94.9	135.0	135.0	135.0
42"		114.5	135.0	135.0	130.7	135.0	135.0	84.3	126.5	135.0	135.0
48"		104.0	135.0	135.0	118.8	135.0	135.0	76.6	114.9	135.0	135.0
52"		98.5	135.0	135.0	112.5	135.0	135.0	72.6	108.9	135.0	135.0
54"		96.1	135.0	135.0	109.8	135.0	135.0	70.8	106.2	135.0	135.0
60"		90.1	135.0	135.0	102.9	135.0	135.0	66.4	99.6	132.8	133.3
66"		85.5	128.3	135.0	97.6	135.0	132.0	63.0	94.5	126.0	126.5
72"		81.9	122.9	135.0	93.6	135.0	126.5	60.4	90.5	120.7	121.2
30"	108"	135.0	135.0	135.0	135.0	135.0	135.0	102.8	135.0	135.0	135.0
36"		120.2	135.0	135.0	135.0	135.0	135.0	88.5	132.8	135.0	135.0
42"		106.6	135.0	135.0	121.7	135.0	135.0	78.5	117.8	135.0	135.0
48"		96.6	135.0	135.0	110.3	135.0	135.0	71.1	106.7	135.0	135.0
52"		91.3	135.0	135.0	104.3	135.0	135.0	67.3	100.9	134.5	135.0
54"		89.0	133.5	135.0	101.7	135.0	135.0	65.6	98.4	131.2	131.7
60"		83.2	124.8	135.0	95.0	135.0	128.5	61.3	91.9	122.6	123.1
66"		78.7	118.0	135.0	89.8	134.7	121.5	57.9	86.9	115.9	116.4
72"		75.1	112.7	135.0	85.8	128.7	116.0	55.3	83.0	110.7	111.1
30"	114"	131.1	135.0	135.0	135.0	135.0	135.0	96.6	135.0	135.0	135.0
36"		112.7	135.0	135.0	128.7	135.0	135.0	83.0	124.5	135.0	135.0
42"		99.7	135.0	135.0	113.8	135.0	135.0	73.4	110.2	135.0	135.0
48"		90.1	135.0	135.0	102.9	135.0	135.0	66.4	99.6	132.8	133.3
52"		85.1	127.6	135.0	97.2	135.0	131.4	62.7	94.0	125.4	125.9
54"		82.9	124.3	135.0	94.7	135.0	128.0	61.1	91.6	122.1	122.6
60"		77.3	115.9	135.0	88.2	132.3	119.3	56.9	85.4	113.8	114.3
66"		72.8	109.3	135.0	83.2	124.8	112.5	53.7	80.5	107.3	107.7
72"		69.3	104.0	135.0	79.2	118.8	107.1	51.1	76.6	102.2	102.6
30"	120"	123.6	135.0	135.0	135.0	135.0	135.0	91.1	135.0	135.0	135.0
36"		106.0	135.0	135.0	121.1	135.0	135.0	78.1	117.2	135.0	135.0
42"		93.6	135.0	135.0	106.9	135.0	135.0	69.0	103.5	135.0	135.0
48"		84.5	126.8	135.0	96.5	135.0	130.5	62.3	93.4	124.5	125.0
52"		79.7	119.5	135.0	91.0	135.0	123.0	58.7	88.0	117.4	117.8
54"		77.5	116.3	135.0	88.5	132.8	119.7	57.1	85.7	114.2	114.7
60"		72.1	108.2	135.0	82.3	123.5	111.4	53.1	79.7	106.2	106.7
66"		67.8	101.7	135.0	77.4	135.0	104.7	50.0	74.9	99.9	100.3
72"		64.4	96.6	128.8	73.5	135.0	99.4	47.4	71.1	94.9	95.2
30"	126"	116.9	135.0	135.0	133.5	135.0	135.0	86.1	129.2	135.0	135.0
36"		100.1	135.0	135.0	114.4	135.0	135.0	73.8	110.7	135.0	135.0
42"		88.3	132.4	135.0	100.8	135.0	135.0	65.0	97.6	130.1	130.6
48"		79.5	119.3	135.0	90.8	135.0	122.8	58.6	87.9	117.2	117.6
52"		74.9	112.3	135.0	85.5	128.3	115.6	55.2	82.7	110.3	110.8
54"		72.8	109.3	135.0	83.2	124.8	112.5	53.7	80.5	107.3	107.7
60"		67.6	101.4	135.0	77.2	115.8	104.4	49.8	74.7	99.6	100.0
66"		63.4	95.2	126.9	72.4	108.7	98.0	46.7	70.1	93.5	93.8

ANCHOR LOAD CAPACITY – PSF
EXT.(+) & INT.(–)

NOMINAL DIMS.		ANCHORS TYPE 'BW' 3/8" MAX. SHIMS			ANCHORS TYPE 'BC' 3/8" SHIMS		ANCHORS TYPE 'BC' 1/4" SHIMS	ANCHORS TYPE 'CM' 3/8" MAX. SHIMS			ANCHORS TYPE 'CM' 1/4" SHIMS
WIDTH (W)	FRAME HEIGHT	BW2	BW3	BW4	BC2	BC3	BC2	CM2	CM3	CM4	CM2
30"	132"	110.9	135.0	135.0	126.7	135.0	135.0	81.7	122.6	135.0	135.0
36"		94.9	135.0	135.0	108.4	135.0	135.0	69.9	104.8	135.0	135.0
42"		83.5	125.3	135.0	95.4	135.0	129.0	61.5	92.3	123.1	123.6
48"		75.1	112.7	135.0	85.8	128.7	116.0	55.3	83.0	110.7	111.1
52"		70.6	106.0	135.0	80.7	121.0	109.1	52.0	78.1	104.1	104.5
54"		68.7	103.0	135.0	78.4	117.6	106.1	50.6	75.9	101.2	101.6
60"		63.6	95.4	127.2	72.7	109.0	98.3	46.9	70.3	93.7	94.1
30"	138"	105.5	135.0	135.0	120.5	135.0	135.0	77.7	116.6	135.0	135.0
36"		90.1	135.0	135.0	102.9	135.0	135.0	66.4	99.6	132.8	133.3
42"		79.2	118.9	135.0	90.5	135.0	122.4	58.4	87.6	116.7	117.2
48"		71.2	106.7	135.0	81.3	121.9	109.9	52.4	78.6	104.8	105.3
52"		66.9	100.3	133.7	76.4	114.5	103.3	49.3	73.9	98.5	98.9
54"		65.0	97.4	129.9	74.2	111.3	100.3	47.9	71.8	95.7	96.1
60"		60.1	90.1	120.2	68.6	102.9	92.8	44.3	66.4	88.5	88.9
30"	144"	100.6	135.0	135.0	114.9	135.0	135.0	74.1	111.2	135.0	135.0
36"		85.8	128.8	135.0	98.0	135.0	132.6	63.2	94.9	126.5	127.0
42"		75.4	113.1	135.0	86.1	129.1	116.4	55.5	83.3	111.1	111.5
48"		67.6	101.4	135.0	77.2	115.8	104.4	49.8	74.7	99.6	100.0
52"		63.5	95.2	126.9	72.5	108.7	98.0	46.7	70.1	93.5	93.9
54"		61.6	92.4	123.3	70.4	105.6	95.2	45.4	68.1	90.8	91.2
60"		56.9	85.4	113.9	65.0	97.5	87.9	41.9	62.9	83.9	84.2

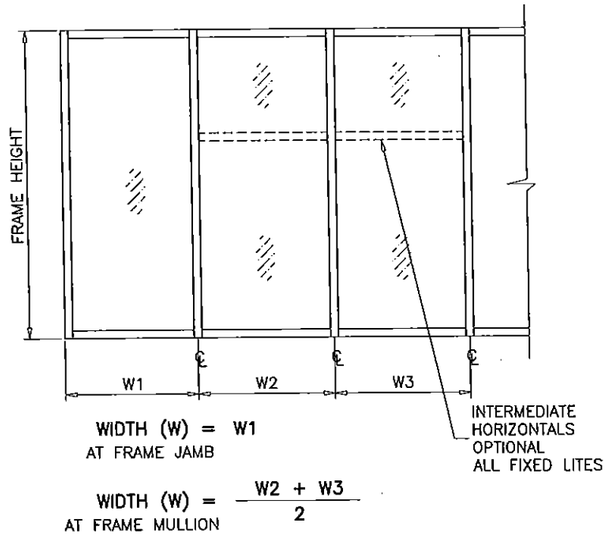

WIDTH (W) = W1
AT FRAME JAMB

WIDTH (W) = $\frac{W2 + W3}{2}$
AT FRAME MULLION

SEE SHEET 8 FOR ANCHOR TYPES.

ANCHORS

Engr: JAVAD AHMAD
CIVIL
FLA. PE # 70592
C.A.N. 3538

JUN 09 2014

Approved as complying with the Florida Building Code
Date July 3 2014
NOA# 14-0415.06
Miami Dade Product Control
By: Manuel Perez

afc

AL-FAROOQ CORPORATION
ENGINEERS & PRODUCT DEVELOPMENT
1235 S.W. 87 AVE
MIAMI, FLORIDA 33174
TEL. (305) 264-8100 FAX. (305) 262-6978

COMP-ANL\W14-12AGP

SERIES FRONT SET ALUM WINDOWALL SYS. (L.M.I.)

Aldora Aluminum & Glass Products Inc.
11500 MIRAMAR PARKWAY SUITE 300
MIRAMAR, FL. 33025
TEL. (305) 888-6288 FAX. (305) 888-6289

revisions:

no	date	by	description

date: 03-21-14
scale: –
dr. by: HAMID
chk. by:

drawing no.
W14-12

DOOR MULLION LOAD CAPACITY		
NOMINAL DIMS.		W/O REINF.
WIDTH (W)	FRAME HEIGHT	EXT.(+) & INT.(−)
30"	84"	90.0
36"		90.0
42"		90.0
48"		90.0
54"		90.0
60"		90.0
30"	96"	90.0
36"		90.0
42"		90.0
48"		87.2
54"		77.5
60"		69.8
30"	97-3/4"	90.0
36"		90.0
42"		90.0
48"		83.1
54"		73.9
58"		68.8

DOOR MULLION LOAD CAPACITY		
NOMINAL DIMS.		WITH REINF.
WIDTH (W)	FRAME HEIGHT	EXT.(+) & INT.(−)
30"	84"	90.0
36"		90.0
42"		90.0
48"		90.0
54"		90.0
60"		90.0
30"	96"	90.0
36"		90.0
42"		90.0
48"		90.0
54"		90.0
60"		90.0
30"	102"	90.0
36"		90.0
42"		90.0
48"		90.0
54"		90.0
60"		90.0
30"	108"	90.0
36"		90.0
42"		90.0
48"		90.0
54"		90.0
60"		82.0
30"	114"	90.0
36"		90.0
42"		90.0
48"		90.0
54"		81.8
60"		73.6
30"	120"	90.0
36"		90.0
42"		90.0
48"		83.0
54"		73.8

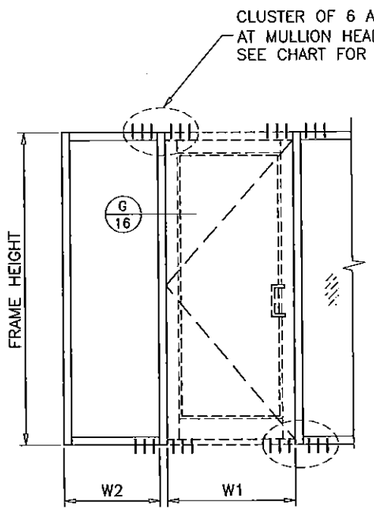

$$\text{WIDTH (W)} = \frac{W1 + W2}{2}$$

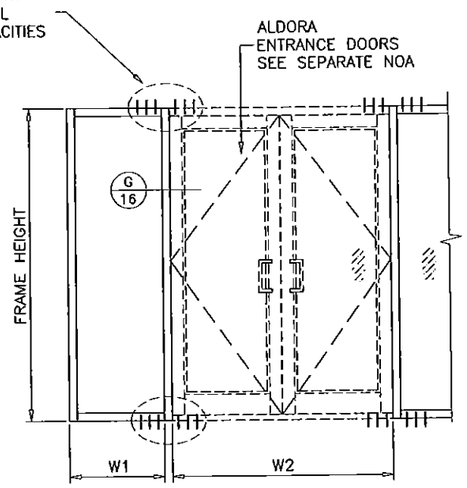

$$\text{WIDTH (W)} = \frac{W1}{2} + \frac{W2}{4}$$

$$\text{WIDTH (W)} = \frac{W1 + W2}{2}$$

DOOR MULLION ANCHORS LOAD CAPACITY - PSF				
NOMINAL DIMS.		ANCHOR TYPES 'AW' & 'AC'	ANCHOR TYPES 'CM'	ANCHOR TYPES 'BW' & 'BC'
WIDTH (W)	FRAME HEIGHT	EXT. (+) INT. (−)	EXT. (+) INT. (−)	EXT. (+) INT. (−)
30"	84"	90.0	90.0	90.0
36"		90.0	90.0	90.0
42"		90.0	90.0	90.0
48"		89.6	90.0	90.0
54"		79.6	90.0	90.0
60"		71.7	85.4	90.0
30"	96"	90.0	90.0	90.0
36"		90.0	90.0	90.0
42"		89.6	90.0	90.0
48"		78.4	90.0	90.0
54"		69.7	83.0	90.0
60"		62.7	74.7	90.0
30"	97-3/4"	90.0	90.0	90.0
36"		90.0	90.0	90.0
42"		88.0	90.0	90.0
48"		77.0	90.0	90.0
54"		68.4	81.5	90.0
60"		61.6	73.4	90.0
30"	102"	90.0	90.0	90.0
36"		90.0	90.0	90.0
42"		84.3	90.0	90.0
48"		73.8	87.9	90.0
54"		65.6	78.1	90.0
60"		59.0	70.3	90.0
30"	108"	90.0	90.0	90.0
36"		90.0	90.0	90.0
42"		79.6	90.0	90.0
48"		69.7	83.0	90.0
54"		61.9	73.8	90.0
60"		55.7	66.4	90.0
30"	120"	90.0	90.0	90.0
36"		83.6	90.0	90.0
42"		71.7	85.4	90.0
48"		62.7	74.7	90.0
54"		55.7	66.4	90.0
60"		50.2	59.8	81.1

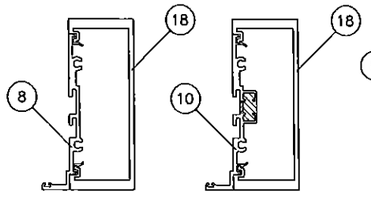

DOOR MULLION
W/O REINF.

Ix IN^4	Sx IN^3
6.063	2.695

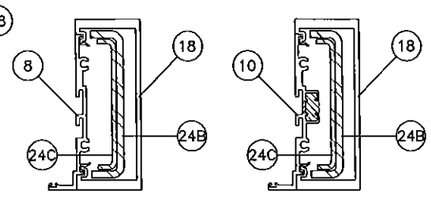

DOOR MULLION
WITH REINF.

	Ix IN^4	Sx IN^3
ALUMINUM	6.063	2.695
STEEL	6.795	1.209
TOTAL Ix ALUM + Ix STL X 2.9	12.858	

DOOR MULLION

Engr: JAVAD AHMAD
CIVIL
FLA. PE # 70592
C.A.N. 3538

JUL 09 2014

approved as complying with the Florida Building Code
Date July 3 2014
NOA# 14-0415.06
Miami Dade Product Control
By Manuel Perez

AL-FAROOQ CORPORATION
ENGINEERS & PRODUCT DEVELOPMENT
1235 S.W. 87 AVE
MIAMI, FLORIDA 33174
TEL. (305) 264-8100 FAX. (305) 262-6978

COMP-ANL\W14-12AGP

SERIES FRONT SET ALUM WINDOWALL SYS. (L.M.I.)

Aldora Aluminum & Glass Products Inc.
11500 MIRAMAR PARKWAY SUITE 300
MIRAMAR, FL. 33025
TEL. (305) 888-6288 FAX. (305) 888-6289

revisions:

no	date	by	description

date: 03-21-14
scale: -
dr. by: HAMID
chk. by:

drawing no. W14-12

DOOR MULLION LOAD CAPACITY – PSF				
NOMINAL DIMS.				WITH REINF.
FRAME HEIGHT INCHES	DOOR HEIGHT INCHES	WIDTH (W1) INCHES	WIDTH (W2) INCHES	EXT. (+) INT. (–)
108	84	72	30	90.0
			36	90.0
			42	90.0
			48	90.0
			54	90.0
			60	90.0
		84	30	90.0
			36	90.0
			42	90.0
			48	90.0
			54	90.0
			60	86.8
120	84	72	30	90.0
			36	88.9
			42	83.6
			48	78.9
			54	74.7
			60	71.0
		84	30	85.5
			36	80.6
			42	76.2
			48	72.3
			54	68.8
			60	65.6
108	96	72	30	90.0
			36	90.0
			42	90.0
			48	90.0
			54	90.0
			60	90.0
		84	30	90.0
			36	90.0
			42	90.0
			48	90.0
			54	90.0
			60	90.0
120	96	72	30	90.0
			36	90.0
			42	89.4
			48	84.0
			54	79.3
			60	75.1
		84	30	90.0
			36	86.8
			42	81.8
			48	77.3
			54	73.3
			60	69.6

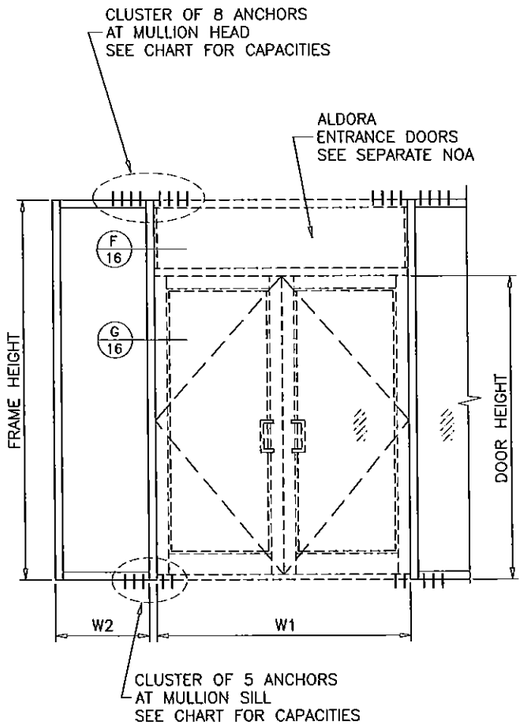

DOOR MULLION ANCHORS LOAD CAPACITY – PSF						
NOMINAL DIMS.				ANCHOR TYPES 'AW' & 'AC'	ANCHOR TYPES 'CM'	ANCHOR TYPES 'BW' & 'BC'
FRAME HEIGHT INCHES	DOOR HEIGHT INCHES	WIDTH (W1) INCHES	WIDTH (W2) INCHES	EXT. (+) INT. (–)	EXT. (+) INT. (–)	EXT. (+) INT. (–)
108	96	72	30	91.0	108.4	135.0
			36	85.7	102.2	135.0
			42	81.1	96.6	131.1
			48	76.9	91.6	124.3
			54	73.1	87.1	118.2
			60	69.7	83.0	112.7
		84	30	81.6	97.2	131.9
			36	77.3	92.1	125.0
			42	73.5	87.6	118.9
			48	70.0	83.4	113.3
			54	66.9	79.7	108.2
			60	64.0	76.2	103.5
120	96	72	30	84.7	100.9	135.0
			36	79.6	94.9	128.8
			42	75.1	89.5	121.5
			48	71.1	84.8	115.1
			54	67.6	80.5	109.3
			60	64.3	76.6	104.0
		84	30	76.0	90.5	122.9
			36	71.9	85.7	116.3
			42	68.2	81.3	110.4
			48	64.9	77.4	105.0
			54	61.9	73.8	100.1
			60	59.2	70.5	95.7

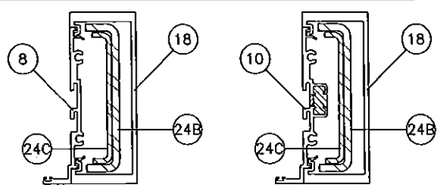

DOOR MULLION
WITH REINF.

	Ix IN^4	Sx IN^3
ALUMINUM	6.063	2.695
STEEL	6.795	1.209
TOTAL Ix ALUM + Ix STL X 2.9	12.858	

DOOR MULLION

Engr: JAVAD AHMAD
CIVIL
FLA. PE # 70592
C.A.I. 3538

JUN 0 9 2014

Approved as complying with the Florida Building Code
Date July 3, 2014
NOA# 14-0415.06
Miami Dade Product Control
By

AL-FAROOQ CORPORATION
ENGINEERS & PRODUCT DEVELOPMENT
1235 S.W. 87 AVE
MIAMI, FLORIDA 33174
TEL. (305) 264-8100 FAX. (305) 262-6978

COMP-ANL\W14-12AGP

SERIES FRONT SET ALUM WINDOWALL SYS. (L.M.I.)

Aldora Aluminum & Glass Products Inc.
11500 MIRAMAR PARKWAY SUITE 300
MIRAMAR, FL. 33025
TEL. (305) 888-6288 FAX. (305) 888-6289

revisions:

no	date	by	description

date: 03-21-14
scale: –
dr. by: HAMID
chk. by:

drowing no. W14-12

sheet 11.1 of 19

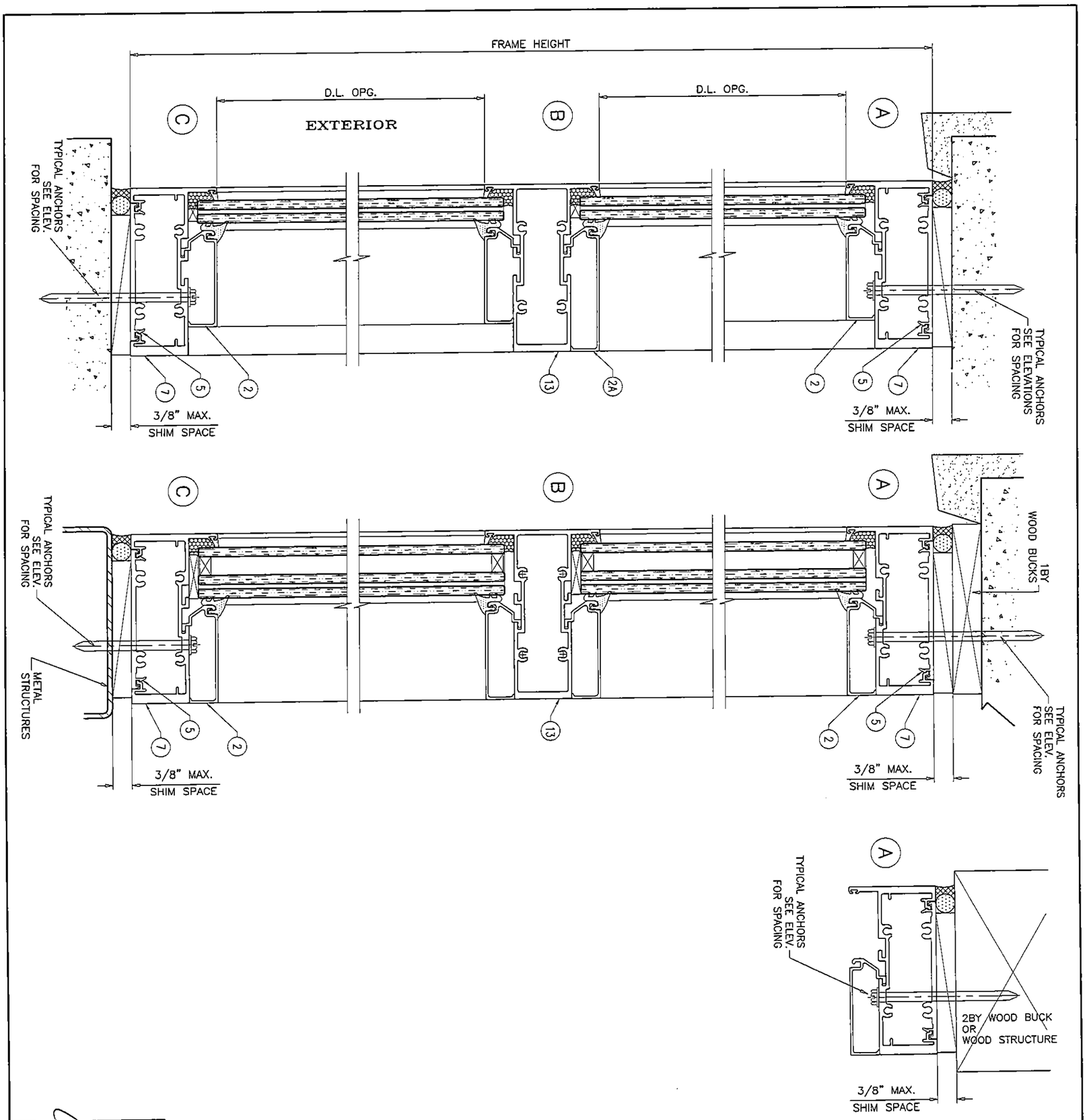

Engr: JAVAD AHMAD
CIVIL
FLA. PE # 70592
C.A.N. 3538

JUN 09 2014

Approved as complying with the Florida Building Code
Date July 3, 2014
NOA# 14-0415.06
Miami Dade Product Control
By: Manuel Perez

sheet 12 of 19	drawing no. W14-12	date: 03-21-14	scale: 3/8" = 1"
		dr. by: HAMID	chk. by:

revisions:

no	date	by	description

SERIES FRONT SET ALUM WINDOWALL SYS. (L.M.I.)

Aldora Aluminum & Glass Products Inc.
11500 MIRAMAR PARKWAY SUITE 300
MIRAMAR, FL. 33025
TEL. (305) 888-6288 FAX. (305) 888-6289

AL-FAROOQ CORPORATION
ENGINEERS & PRODUCT DEVELOPMENT
1235 S.W. 87 AVE
MIAMI, FLORIDA 33174
TEL. (305) 264-8100 FAX. (305) 262-6978

afc

COMP-ANL\W14-12AGP

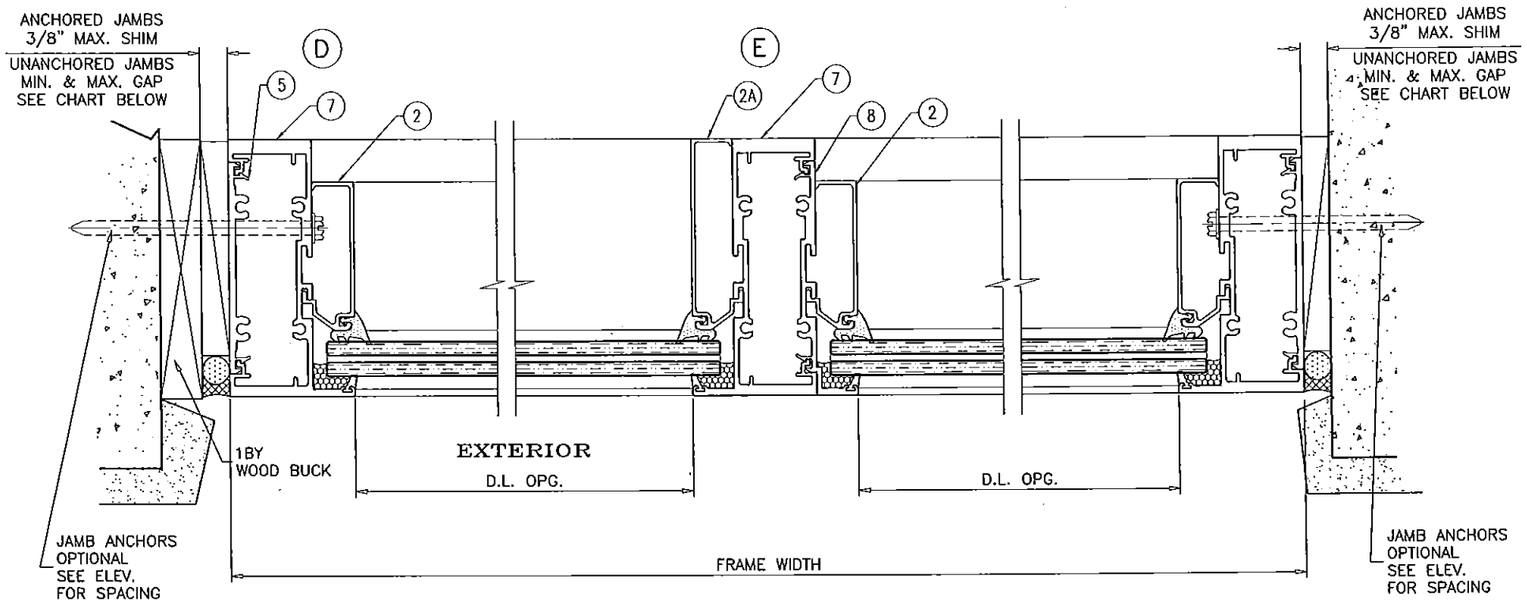

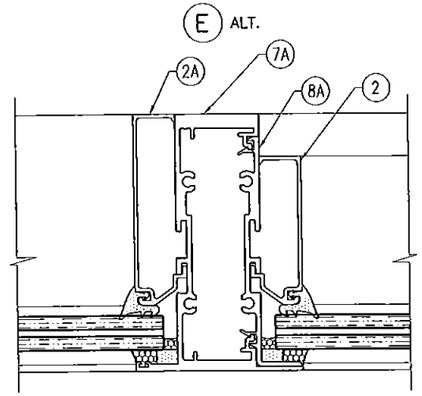

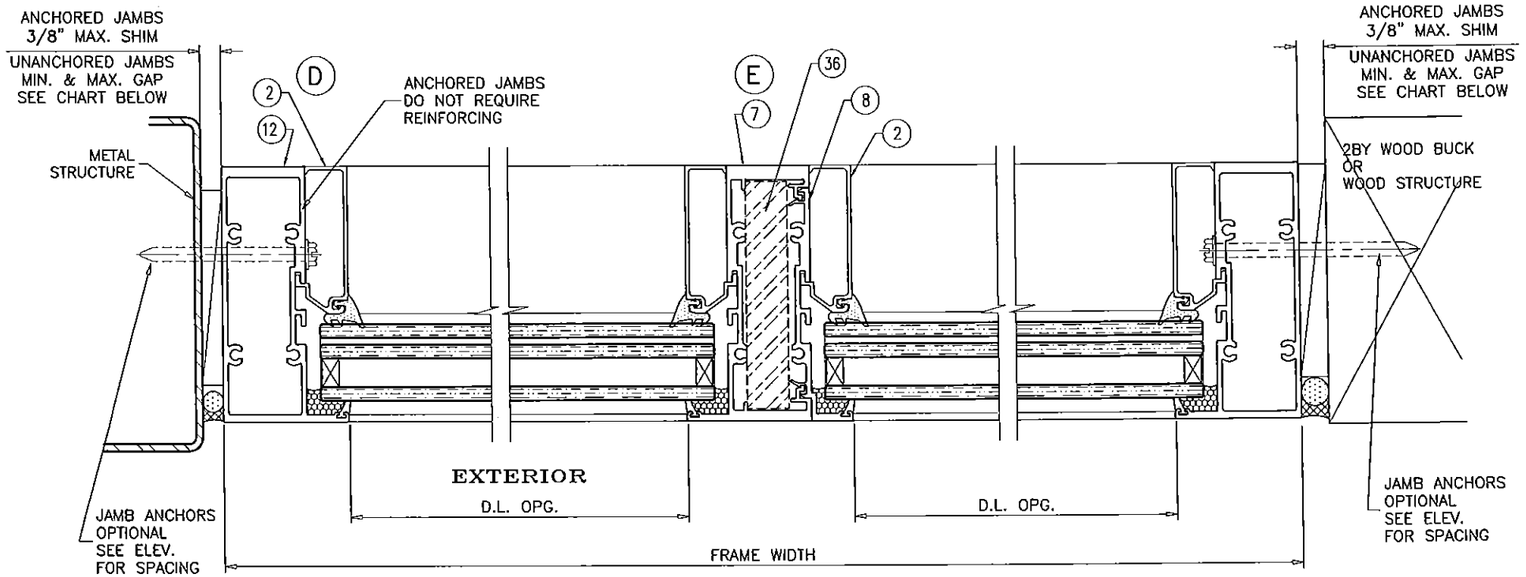

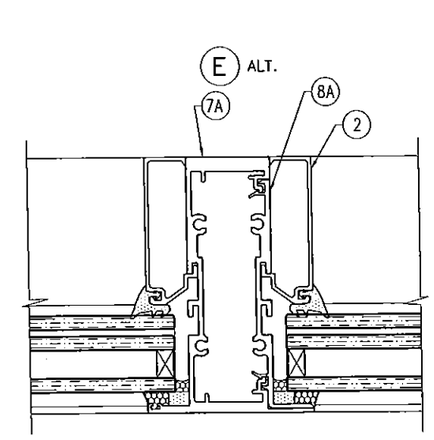

MAX. FRAME HEIGHT	MAX. GAPS FOR UNANCHORED JAMBS			
	MULLION M1, M3 JAMB J1, J2, J3		MULLION M2, M4 JAMB J2, J4	
	MIN.	MAX.	MIN.	MAX.
84"	1/4"	1"	1/4"	1"
96"	1/4"	1"	1/4"	1"
108"	1/4"	1"	3/8"	1"
120"	1/4"	1"	3/8"	1"
132"	–	–	3/8"	1"
144"	–	–	3/8"	1"

NOTE:
MAX. MOVEMENT CONSIDERED=100% STRETCH.
PLEASE REFER TO SEALANT MANUFACTURER'S DATA AND APPLICATION MANUAL FOR COMPATABILITY OF SEALANT TO SUBSTRATE & WINDOWALL MATERIAL/FINISH AND COMPLIANCE FOR WARRANTY.
REFER TO ACI-117-10 FOR CONSTRUCTION TOLERANCES.

ALTERNATE SEALANTS AT JAMB GAPS CAN BE DESIGNED BY ENGINEER OF RECORD BASED ON MANUFACTURER GUIDE LINES.

GAPS LESS THAN 1/4" MAY BE DESIGNED BY ENGINEER OF RECORD BY THE USE OF BOND BREAKER TAPE OR 15% OF GAP ALLOWED MOVEMENT.

REFER TO SHEETS 4 THRU 7 FOR SELECTION OF MULLION/JAMB WITH REINFORCED & UNREINFORCED FRAMES.

Engr: JAVAD AHMAD
CIVIL
FLA. PE # 70592
C.A.N. 3538
JUN 09 2014

Approved as complying with the Florida Building Code
Date: JUN 3 2014
NOA# 14-0415.06
Miami Dade Product Control
By: Manuel Perez

AL-FAROOQ CORPORATION
ENGINEERS & PRODUCT DEVELOPMENT
1235 S.W. 87 AVE
MIAMI, FLORIDA 33174
TEL (305) 264-8100 FAX. (305) 262-6978

COMP-ANL\W14-12AGP

SERIES FRONT SET ALUM WINDOWALL SYS. (L.M.I.)

Aldora Aluminum & Glass Products Inc.
11500 MIRAMAR PARKWAY SUITE 300
MIRAMAR, FL. 33025
TEL. (305) 888-6288 FAX. (305) 888-6289

revisions:

no	date	by	description

date: 03-21-14
scale: 3/8" = 1"
dr. by: HAMID
chk. by:

drawing no.
W14-12

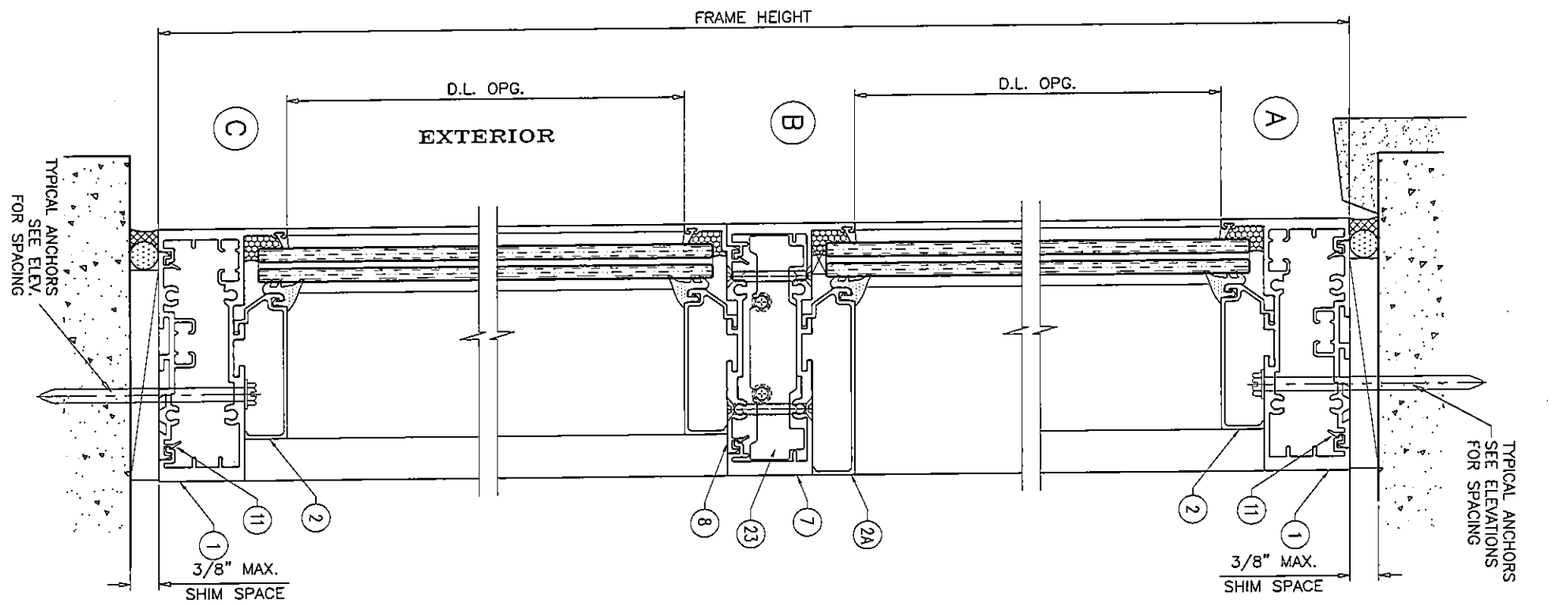

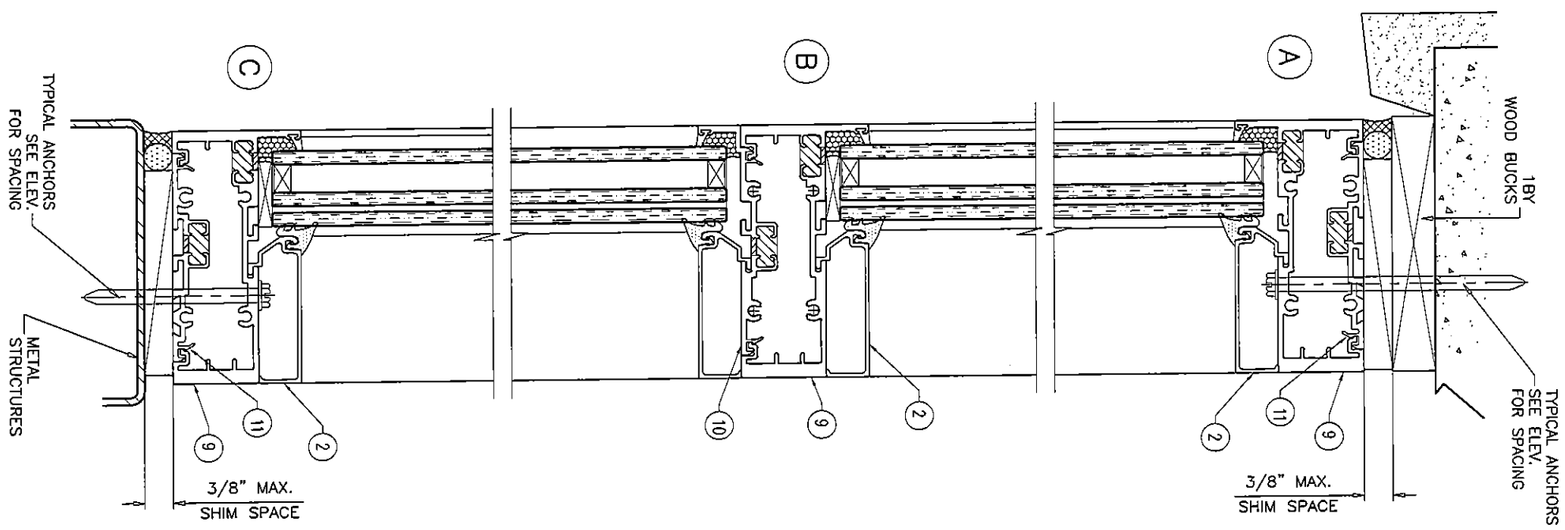

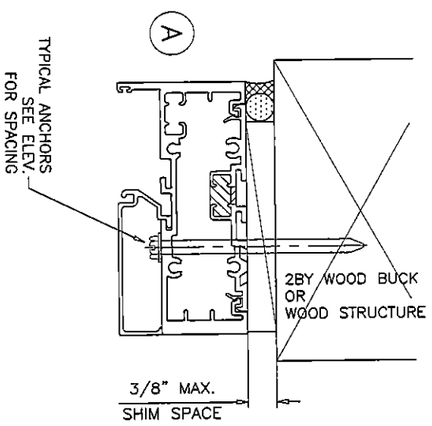

Engr. JAVAD AHMAD
CIVIL
FLA. PE # 70592
C.A.R. 3538

JUN 09 2014

"Approved as complying with the Florida Building Code"
Date: June 3, 2014
NOA# 14-0415.02
Miami Date Product Control
By:

sheet 14 of 19	drawing no. W14-12	date: 03-21-14 scale: 3/8" = 1" dr. by: HAMID chk. by:

revisions:

no	date	by	description

SERIES FRONT SET ALUM WINDOWALL SYS. (L.M.I.)

Aldora Aluminum & Glass Products Inc.
11500 MIRAMAR PARKWAY SUITE 300
MIRAMAR, FL. 33025
TEL. (305) 888-6288 FAX. (305) 888-6289

AL-FAROOQ CORPORATION
ENGINEERS & PRODUCT DEVELOPMENT
1235 S.W. 87 AVE
MIAMI, FLORIDA 33174
TEL. (305) 264-8100 FAX. (305) 262-6978

afc

COMP-ANL\W14-12AGP

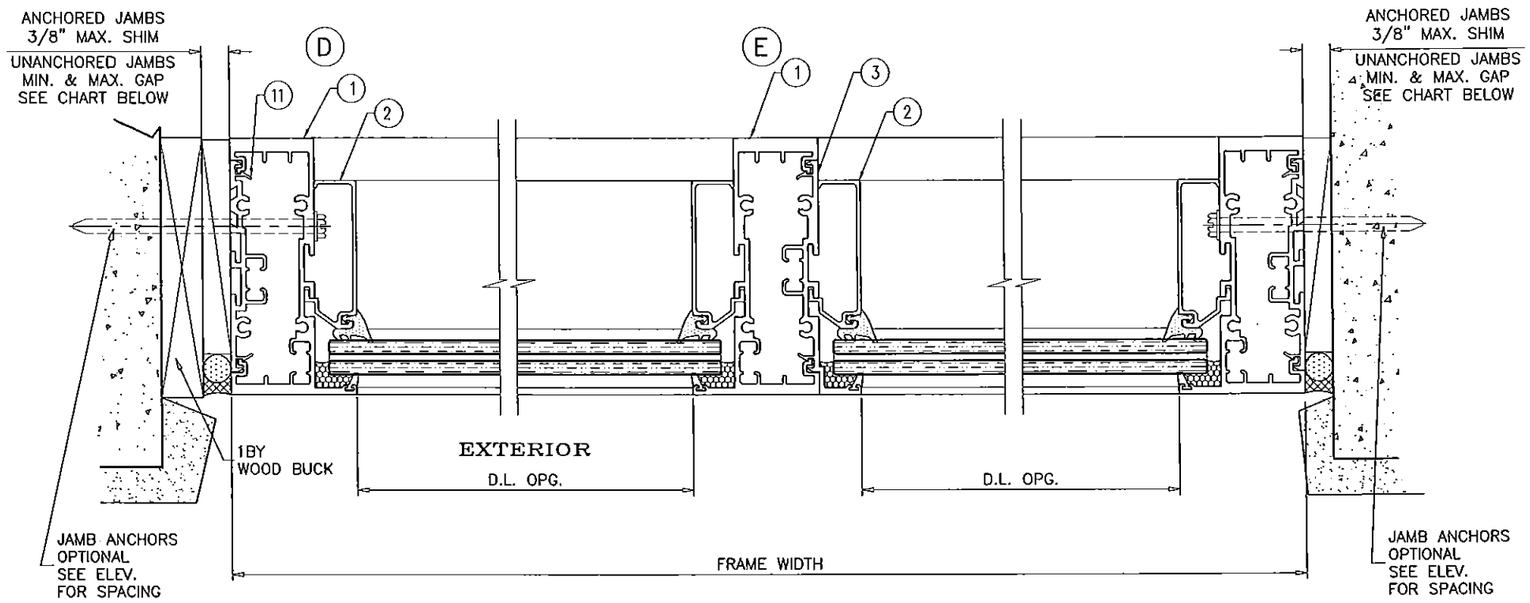

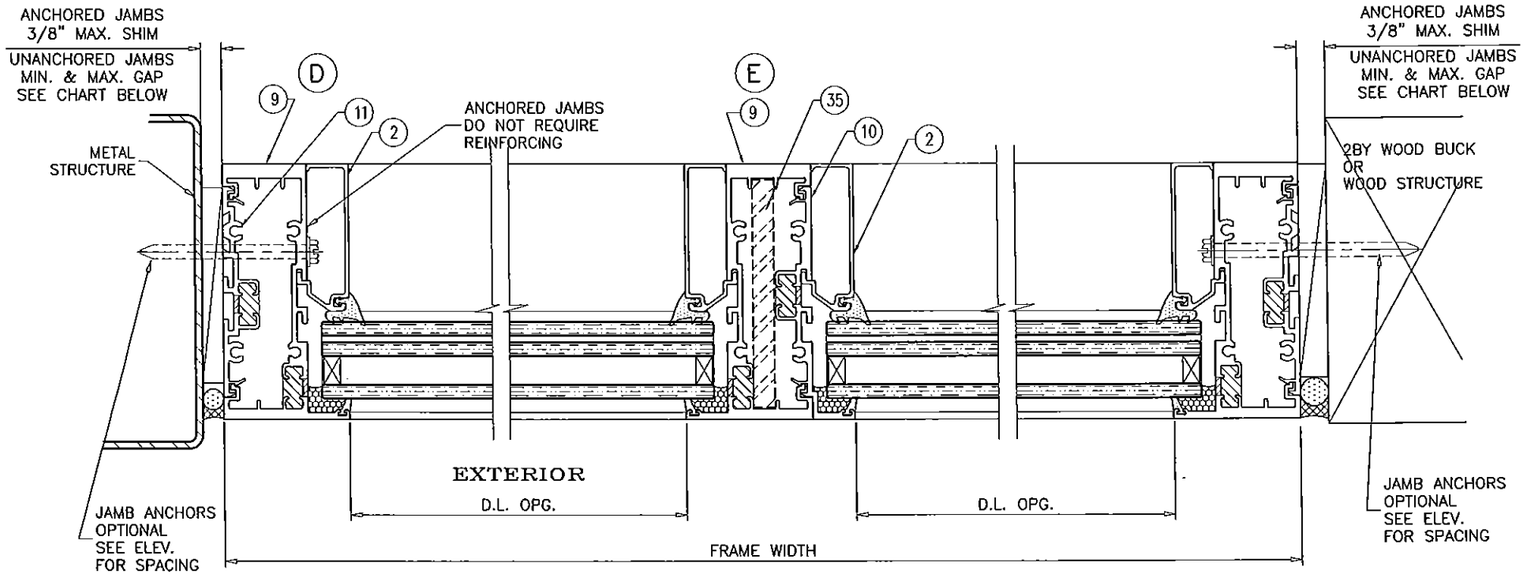

MAX. FRAME HEIGHT	MAX. GAPS FOR UNANCHORED JAMBS			
	MULLION M1, M3 JAMB J1, J2, J3		MULLION M2, M4 JAMB J2, J4	
	MIN.	MAX.	MIN.	MAX.
84"	1/4"	1"	1/4"	1"
96"	1/4"	1"	1/4"	1"
108"	1/4"	1"	3/8"	1"
120"	1/4"	1"	3/8"	1"
132"	–	–	3/8"	1"
144"	–	–	3/8"	1"

NOTE:
MAX. MOVEMENT CONSIDERED=100% STRETCH.
PLEASE REFER TO SEALANT MANUFACTURER'S DATA AND APPLICATION MANUAL FOR COMPATABILITY OF SEALANT TO SUBSTRATE & WINDOWALL MATERIAL/FINISH AND COMPLIANCE FOR WARRANTY.
REFER TO ACI-117-10 FOR CONSTRUCTION TOLERANCES.

ALTERNATE SEALANTS AT JAMB GAPS CAN BE DESIGNED BY ENGINEER OF RECORD BASED ON MANUFACTURER GUIDE LINES.

GAPS LESS THAN 1/4" MAY BE DESIGNED BY ENGINEER OF RECORD BY THE USE OF BOND BREAKER TAPE OR 15% OF GAP ALLOWED MOVEMENT.

REFER TO SHEETS 4 THRU 7 FOR SELECTION OF MULLION/JAMB WITH REINFORCED & UNREINFORCED FRAMES.

Engr: JAVAD AHMAD
CIVIL
FLA. PE # 70592
C.A.N. 3588

JUN 09 2014

Approved as complying with the Florida Buiding Code
Date JULY 3, 2014
NOA# 14-0415.06
Miami Dade Product Control
By

AL-FAROOQ CORPORATION
ENGINEERS & PRODUCT DEVELOPMENT
1235 S.W. 87 AVE
MIAMI, FLORIDA 33174
TEL. (305) 264-8100 FAX. (305) 262-6978

COMP-ANL\W14-12AGP

SERIES FRONT SET ALUM WINDOWALL SYS. (L.M.I.)

Aldora Aluminum & Glass Products Inc.
11500 MIRAMAR PARKWAY SUITE 300
MIRAMAR, FL. 33025
TEL. (305) 888-6288 FAX. (305) 888-6289

revisions:

no	date	by	description

date: 03-21-14
scale: 3/8" = 1"
dr. by: HAMID
chk. by:

drawing no.
W14-12

SEE SEPARATE NOA FOR DESIGN LOAD CAPACITY OF DOORS AND DOOR ANCHORS.

LOWER VALUES FROM DOORS NOA OR STOREFRONT SYSTEM CAPACITY CHARTS WILL APPLY TO ENTIRE SYSTEM.

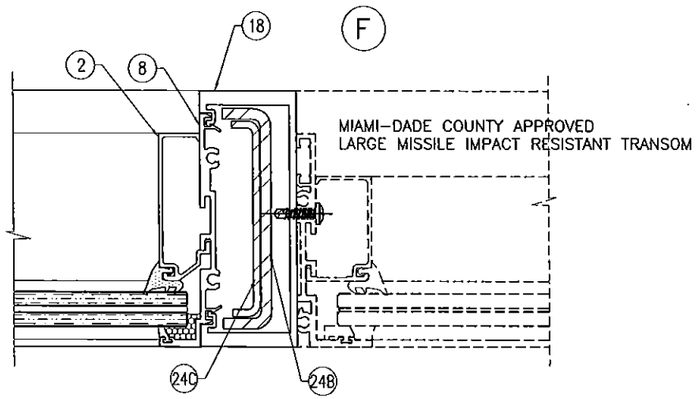

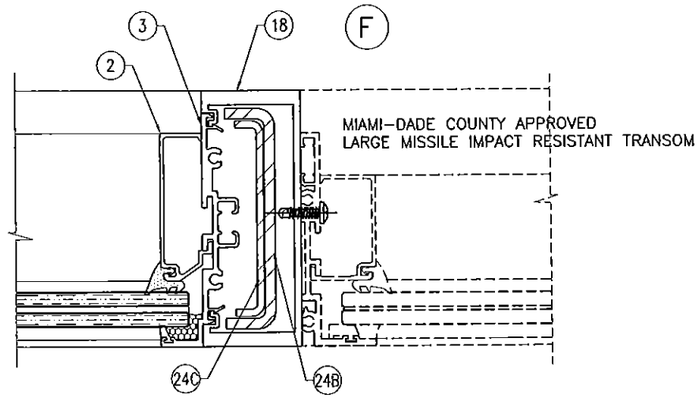

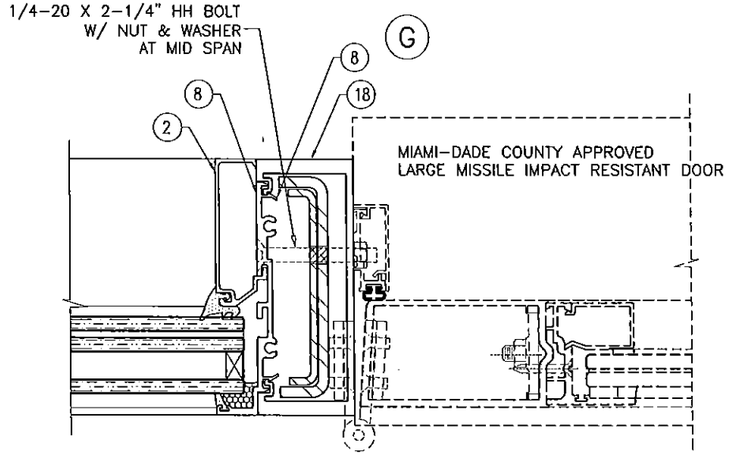

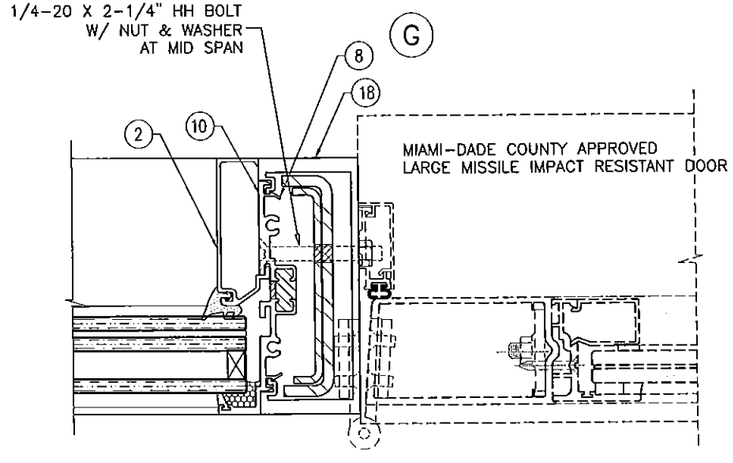

Engr: JAVAD AHMAD
CIVIL
FLA. PE # 70592
C.A.N. 3538

JUN 09 2014

Approved as complying with the Florida Building Code
Date July 3, 2014
NOA# 14-0415.06
Miami Dade Product Control
By Manuel Perez

AL-FAROOQ CORPORATION
ENGINEERS & PRODUCT DEVELOPMENT
1235 S.W. 87 AVE
MIAMI, FLORIDA 33174
TEL. (305) 264-8100 FAX. (305) 262-6978
COMP-ANL\W14-12AGP

SERIES FRONT SET ALUM WINDOWALL SYS. (L.M.I.)

Aldora Aluminum & Glass Products Inc.
11500 MIRAMAR PARKWAY SUITE 300
MIRAMAR, FL. 33025
TEL (305) 888-6288 FAX. (305) 888-6289

revisions:

no	date	by	description

date: 03-21-14
scale: 3/8" = 1"
dr. by: HAMID
chk. by:

drawing no.
W14-12

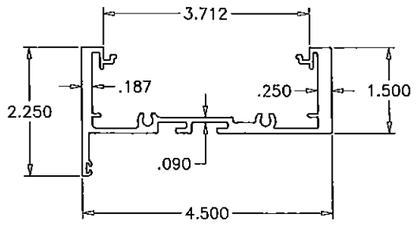

7 HEAD/SILL/JAMB/INTERMEDIATE & MULLION

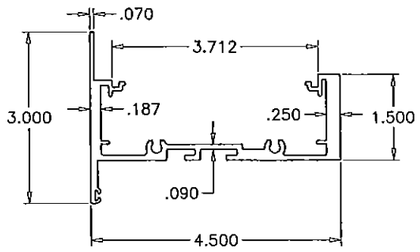

7A INTERMEDIATE HORIZ. & MULLION TYPE 2

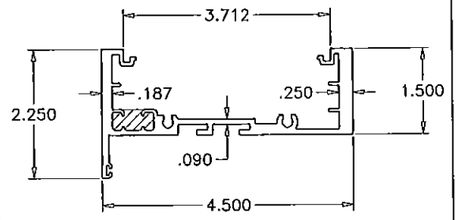

9 POUR & DEBRIDGE HEAD/SILL/JAMB/INTERMEDIATE & MULLION

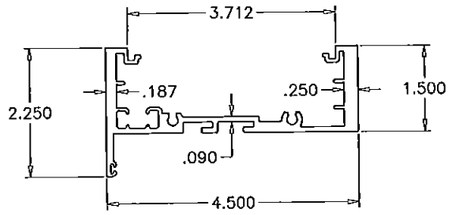

1 HEAD/SILL/JAMB/INTERMEDIATE & MULLION

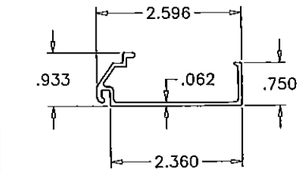

2 GLASS STOP

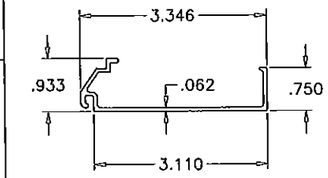

2A GLASS STOP

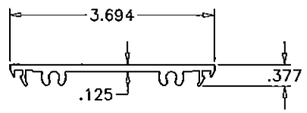

5 PLAIN SNAP

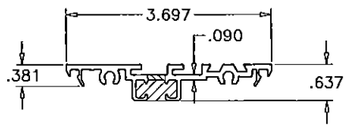

11 POUR AND DEBRIDGE PLAIN SNAP

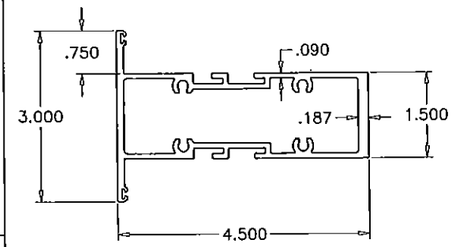

13 INTERMEDIATE HORIZONTAL

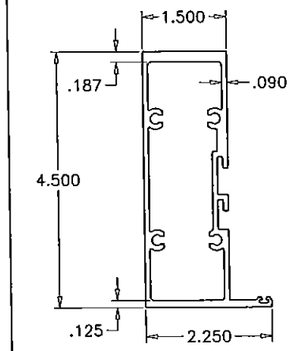

12 HEAD/JAMB/SILL

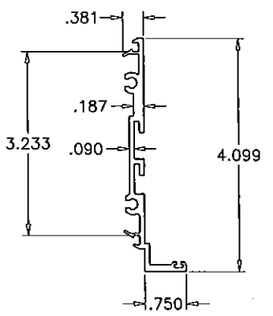

8 FIN SNAP

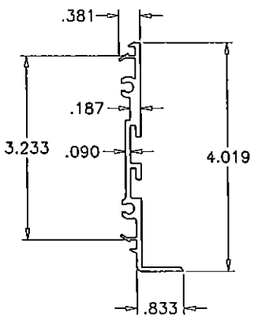

8A FIN SNAP TYPE 2

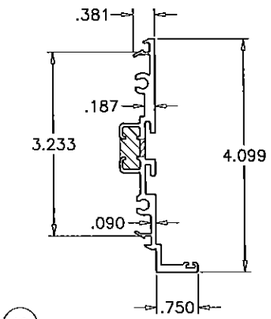

10 POUR & DEBRIDGE FIN SNAP

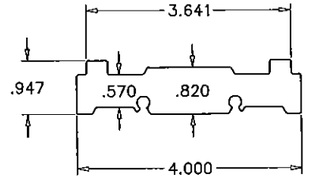

23 SHEAR BLOCK

18 DOOR FRAME JAMB

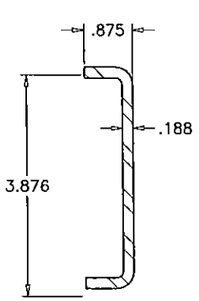

24B DOOR REINF. CHANNEL

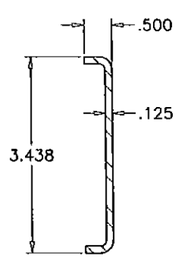

24C DOOR REINF. CHANNEL

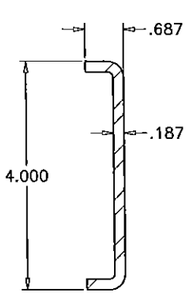

47 JAMB REINF. CHANNEL

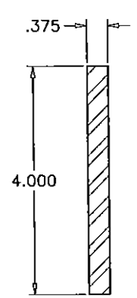

35 JAMB/MULLION REINF. BAR

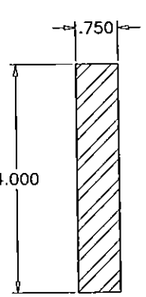

36 MULLION REINF. BAR

Engr: JAVAD AHMAD
CIVIL
FLA. PE # 70592
C.A.N. 3638

JUN 09 2014

Approved as complying with the Florida Building Code
Date JULY 3, 2014
NOA# 14-04.15.06
Miami Dade Product Control
By Manuel Perez

af c

AL-FAROOQ CORPORATION
ENGINEERS & PRODUCT DEVELOPMENT
1235 S.W. 87 AVE
MIAMI, FLORIDA 33174
TEL. (305) 264-8100 FAX. (305) 262-6978
COMP-ANL\W14-12AGP

SERIES FRONT SET ALUM WINDOWALL SYS. (L.M.I.)

Aldora Aluminum & Glass Products Inc.
11500 MIRAMAR PARKWAY SUITE 300
MIRAMAR, FL. 33025
TEL. (305) 888-6288 FAX. (305) 888-6289

revisions:			
no	date	by	description

date: 03-21-14
scale: 3/8" = 1"
dr. by: HAMID
chk. by:

drawing no.
W14-12

ITEM #	PART #	REQ'D	DESCRIPTION	MATERIAL	MANF. / SUPPLIER / REMARKS
1	SMI-311	AS REQ'D	HEAD, INTERM., SILL, JAMB AND MULLION- HEAVY.	6063-T6	-
2	SMI-312	AS REQ'D	GLASS STOP	6063-T6	-
2A	SMI-314	AS REQ'D	GLASS STOP (LARGER)	6063-T6	-
3	SMI-313	AS REQ'D	FIN SNAP	6063-T6	-
4	SMI-094	AS REQ'D	PLAIN SNAP	6063-T6	-
5	SMI-004	AS REQ'D	PLAIN SNAP	6063-T6	-
7	SMI-316	AS REQ'D	HEAD, INTERM., SILL, JAMB & MULLION- HEAVY	6063-T6	-
7A	SMI-321	AS REQ'D	INTERMEDIATE HORIZONTAL & MULLION- TYPE 2	6063-T6	-
8	SMI-317	AS REQ'D	FIN SNAP	6063-T6	-
8A	SMI-322	AS REQ'D	FIN SNAP TYPE 2	6063-T6	-
9	SMI-311T	AS REQ'D	POUR & DEBRIDGE HEAD, INTERM., SILL, JAMB & MULLION- HEAVY.	6063-T6	-
10	SMI-313T	AS REQ'D	POUR & DEBRIDGE FIN SNAP	6063-T6	-
11	SMI-094T	AS REQ'D	POUR & DEBRIDGE PLAIN SNAP	6063-T6	-
12	SMI-318	AS REQ'D	HEAD, JAMB & SILL.	6063-T6	-
13	SMI-319	AS REQ'D	INTERMEDIATE HORIZONTAL	6063-T6	-
18	SMI-005	AS REQ'D	DOOR FRAME JAMB	6063-T6	-
23	SMI-320	AS REQ'D	SHEAR BLOCK (1" LG.)	6063-T6	-
24B	7/8"X3 7/8"X7/8"	AS REQ'D	REINFORCING CHANNEL 3/16"THK.	STEEL	-
24C	1/2"X3 7/16"X1/2"	AS REQ'D	REINFORCING CHANNEL 1/8"THK.	STEEL	-
25	SMI-G01	AS REQ'D	GASKET (AT INTERIOR)	EPDM	TREMCO
26	SMI-G13	AS REQ'D	SPACER / RETAINER OUTER GASKET	SANTOPRENE	MELTPOINT PLASTICS INTERNATIONAL.
27	SMI-G17	AS REQ'D	SINGLE FACE FOAM TAPE (3/8" X 1/4")	VINYL FOAM	FRANK LOWE
30	SMI-G12	AS REQ'D	DOUBLE FACE FOAM TAPE (3/16" X 1/2")	VINYL FOAM	FRANK LOWE
32	SMI-SB04	2 PER GL.	SETTING BLOCKS (3/8" X 1 1/4" X 4" LG.)	EPDM	TREMCO, DUROMETER 80±5 SHORE A
34	SMI-SB07	2 PER GL.	SETTING BLOCKS (1/4" X 1 1/4" X 4" LG.)	EPDM	TREMCO, DUROMETER 80±5 SHORE A
35	3/8" X 4"	AS REQ'D	REINFORCING BAR	STEEL	-
36	3/4" X 4"	AS REQ'D	REINFORCING BAR	STEEL	-
46	#12 X 1 1/2"	4/CORNER	FRAME ASSEMBLY SCREWS	ST. STEEL	HEX. HEAD MACHINE SCREW
47	11/16"X 4" X 11/16"	AS REQ'D	JAMB REINFORCING CHANNEL 3/16"THK.	STEEL	-

Engr: JAVAD AHMAD
CIVIL
FLA. PE # 70592
C.A.N. 3538

JUN 09 2014

Approved as complying with the Florida Building Code
Date: July 3, 2014
NOA# 14-0415.06
Miami Dade Product Control
By

AL-FAROOQ CORPORATION
ENGINEERS & PRODUCT DEVELOPMENT
1235 S.W. 87 AVE
MIAMI, FLORIDA 33174
TEL. (305) 264-8100 FAX. (305) 262-6978

COMP-ANL\W14-12AGP

SERIES FRONT SET ALUM WINDOWALL SYS. (L.M.I.)

Aldora Aluminum & Glass Products Inc.
11500 MIRAMAR PARKWAY SUITE 300
MIRAMAR, FL. 33025
TEL. (305) 888-6288 FAX. (305) 888-6289

revisions:

no	date	by	description

date: 03-21-14
scale: 3/8" = 1"
dr. by: HAMID
chk. by:

drawing no.
W14-12

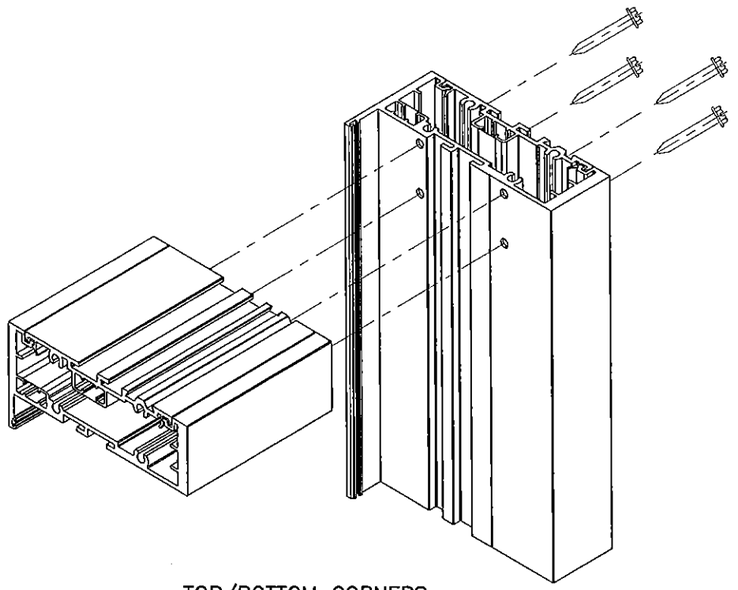

TOP/BOTTOM CORNERS

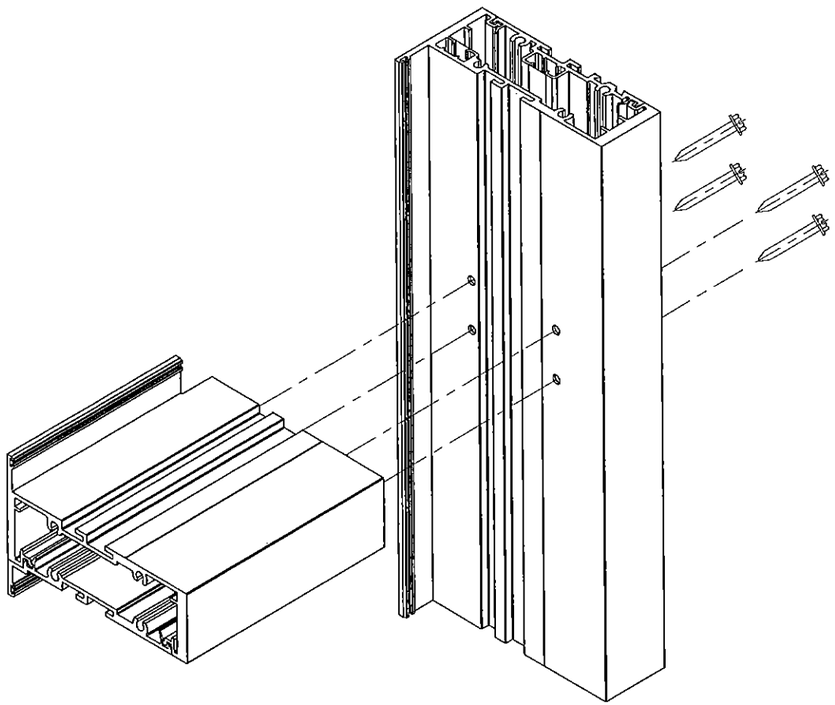

INTERMEDIATE CORNERS

Engr: JAVAD AHMAD
CIVIL
FLA. PE # 70592
C.A.N. 3538

JUN 09 2014

Approved as complying with the Florida Building Code
Date July 3, 2014
NOA# 14-0415.06
Miami Dade Product Control
By Manuel Perez

AL-FAROOQ CORPORATION
ENGINEERS & PRODUCT DEVELOPMENT
1235 S.W. 87 AVE
MIAMI, FLORIDA 33174
TEL. (305) 264-8100 FAX. (305) 262-6978

COMP-ANL\W14-12AGP

SERIES FRONT SET ALUM WINDOWALL SYS. (L.M.I.)

Aldora Aluminum & Glass Products Inc.
11500 MIRAMAR PARKWAY SUITE 300
MIRAMAR, FL. 33025
TEL. (305) 888-6288 FAX. (305) 888-6289

revisions:

no	date	by	description

date: 03-21-14
scale: 3/8" = 1"
dr. by: HAMID
chk. by:

drawing no.
W14-12

sheet 19 of 19