MIAMI-DADE COUNTY
DEPARTMENT OF REGULATORY AND ECONOMIC RESOURCES (RER)
BOARD AND CODE ADMINISTRATION DIVISION

MIAMI-DADE COUNTY
PRODUCT CONTROL SECTION
11805 SW 26 Street, Room 208
T (786) 315-2590 F (786) 315-2599
www.miamidade.gov/economy

NOTICE OF ACCEPTANCE (NOA)

Global Performance Windows, Inc. dba Epsylon USA
2115 SW 2nd Street
Pompano Beach, FL 33069

SCOPE:

This NOA is being issued under the applicable rules and regulations governing the use of construction materials. The documentation submitted has been reviewed and accepted by Miami-Dade County RER - Product Control Section to be used in Miami Dade County and other areas where allowed by the Authority Having Jurisdiction (AHJ).

This NOA shall not be valid after the expiration date stated below. The Miami-Dade County Product Control Section (In Miami Dade County) and/or the AHJ (in areas other than Miami Dade County) reserve the right to have this product or material tested for quality assurance purposes. If this product or material fails to perform in the accepted manner, the manufacturer will incur the expense of such testing and the AHJ may immediately revoke, modify, or suspend the use of such product or material within their jurisdiction. RER reserves the right to revoke this acceptance, if it is determined by Miami-Dade County Product Control Section that this product or material fails to meet the requirements of the applicable building code.

This product is approved as described herein, and has been designed to comply with the Florida Building Code, including the High Velocity Hurricane Zone.

DESCRIPTION: Series "EUSA WW 4 SG" Aluminum Window Wall System – S.M.I.

APPROVAL DOCUMENT: Drawing No. **EUSA MDC-004**, titled "Aluminum Window Wall - Series WW4SG - Small Missile Impact", sheets 1 through 19 of 19, dated 04/04/14, with revision #2 dated 09/03/14, prepared by Facade and Envelope Engineering Consultants, LLC, signed and sealed by Manuel Morales, P.E., bearing the Miami–Dade County Product Control Approval stamp with the Notice of Acceptance number and approval date by the Miami–Dade County Product Control Section.

MISSILE IMPACT RATING: Small Missile Impact Resistant.

LABELING: Each unit shall bear a permanent label with the manufacturer's name or logo, city, state, model/series, and following statement: "Miami-Dade County Product Control Approved", unless otherwise noted herein.

RENEWAL of this NOA shall be considered after a renewal application has been filed and there has been no change in the applicable building code negatively affecting the performance of this product.

TERMINATION of this NOA will occur after the expiration date or if there has been a revision or change in the materials, use, and/or manufacture of the product or process. Misuse of this NOA as an endorsement of any product, for sales, advertising or any other purposes shall automatically terminate this NOA. Failure to comply with any section of this NOA shall be cause for termination and removal of NOA.

ADVERTISEMENT: The NOA number preceded by the words Miami-Dade County, Florida, and followed by the expiration date may be displayed in advertising literature. If any portion of the NOA is displayed, then it shall be done in its entirety.

INSPECTION: A copy of this entire NOA shall be provided to the user by the manufacturer or its distributors and shall be available for inspection at the job site at the request of the Building Official.

This NOA consists of this page 1 and evidence pages E-1 and E-2, as well as approval document mentioned above.

The submitted documentation was reviewed by **Manuel Perez, P.E.**

MIAMI-DADE COUNTY APPROVED

10/16/14

Global Performance Windows, Inc. dba Epsylon USA

NOTICE OF ACCEPTANCE: EVIDENCE SUBMITTED

A. DRAWINGS

1. Manufacturer's die drawings and sections.
2. Drawing No **EUSA MDC-004**, titled "Aluminum Window Wall - Series WW4SG - Small Missile Impact", sheets 1 through 19 of 19, dated 04/04/14, with revision #2 dated 09/03/14, prepared by Facade and Envelope Engineering Consultants, LLC, signed and sealed by Manuel Morales, P.E.

B. TESTS

1. Test reports on: 1) Air Infiltration Test, per FBC, TAS 202–94
   2) Uniform Static Air Pressure Test, Loading per FBC, TAS 202–94
   3) Water Resistance Test, per FBC, TAS 202–94
   4) Large Missile Impact Test per FBC, TAS 201–94
   5) Small Missile Impact Test per FBC, TAS 201–94
   6) Cyclic Wind Pressure Loading per FBC, TAS 203–94

   along with marked-up drawings and installation diagram of a series 3,4SG aluminum window wall system, prepared by Fenestration Testing Laboratory, Inc., Test Report No. **FTL-7275**, dated 06/27/13, signed and sealed by Jorge A. Naya, Jr., P.E.
2. Test reports on: 1) Uniform Static Air Pressure Test, Loading per FBC, TAS 202–94
   2) Uniform Static Air Pressure Test, Loading per FBC, TAS 202–94
   3) Water Resistance Test, per FBC, TAS 202–94
   4) Small Missile Impact Test per FBC, TAS 201–94
   5) Cyclic Wind Pressure Loading per FBC, TAS 203–94

   along with marked-up drawings and installation diagram of a series SD20 aluminum sliding glass door, prepared by Fenestration Testing Laboratory, Inc., Test Report No. **FTL-7349**, dated 07/05/13, signed and sealed by Jorge A. Naya, Jr., P.E.

C. CALCULATIONS

1. Anchor verification calculations and structural analysis, complying with **FBC-2010**, dated 04/10/14, prepared by Facade and Envelope Engineering Consultants, LLC, signed and sealed by Manuel Morales, P.E.
2. Glazing complies with **ASTM E1300-09.**

D. QUALITY ASSURANCE

1. Miami-Dade Department of Regulatory and Economic Resources (RER)

Manuel Perez

Manuel Perez, P.E.
Product Control Examiner
NOA No. 14-0415.07
Expiration Date: September 11, 2019
Approval Date: September 11, 2014

NOTICE OF ACCEPTANCE: EVIDENCE SUBMITTED

E. MATERIAL CERTIFICATIONS

1. Notice of Acceptance No. **12–1231.10** issued to **Eastman Chemical Company (MA)** for their "**Saflex Clear and Color Glass Interlayers**" dated 03/28/13, expiring on 05/21/16.

F. STATEMENTS

1. Statement letter of conformance, complying with **FBC-2010**, dated 04/10/14, prepared by Facade and Envelope Engineering Consultants, LLC, signed and sealed by Manuel Morales, P.E.
2. Statement letter of no financial interest, dated 04/10/14, prepared by Facade and Envelope Engineering Consultants, LLC, signed and sealed by Manuel Morales, P.E.
3. Proposal **#13-0331**, approved by Product Control Section, dated May 15, 2013, signed by Jaime Gascon, P.E., Supervisor, Product Control Section.
4. Proposal **#13-0331R**, approved by Product Control Section, dated July 10, 2013, signed by Manuel Perez, P.E., Product Control Examiner, Product Control Section.
5. Distributor Agreement between Epsylon Concept, Inc., Quebec, Canada and Global Performance Windows, Inc. dba Epsylon USA, Pompano Beach, Florida, USA, dated 10/11/14, signed by Jean Lefrancois and Gabriel Matteau, respectively.

G. OTHERS

1. None.

Manuel Perez

Manuel Perez, P.E.
Product Control Examiner
NOA No. 14-0415.07
Expiration Date: September 11, 2019
Approval Date: September 11, 2014

EPSYLON USA (EUSA)
SERIES WW-4SG ALUMINUM
WINDOW WALL
SMALL MISSILE IMPACT

APPROVAL DRAWINGS

GENERAL NOTES

1. THIS PRODUCT HAS BEEN DESIGNED AND TESTED IN ACCORDANCE WITH THE FLORIDA BUILDING CODE 2010 EDITION, INCLUDING THE REQUIREMENTS FOR HIGH VELOCITY HURRICANE ZONES (HVHZ).

2. THIS PRODUCT IS AN ALUMINUM WINDOW WALL SYSTEM, SMALL MISSILE IMPACT RESISTANT, THAT CAN BE USED ONLY AT ELEVATIONS ABOVE 30'-0" OF GRADE LEVEL WITHOUT HURRICANE PROTECTIVE SHUTTERS. HURRICANE PROTECTIVE SHUTTERS SHALL BE REQUIRED FOR INSTALLATIONS BELOW 30'-0" ABOVE GRADE.

3. DESIGN LOAD RATING FOR THIS PRODUCT TO BE AS PER CHARTS HEREIN INCLUDED FOR A MAXIMUM OF +210 / -210 PSF.

4. THIS SYSTEM MAY BE USED IN CONJUNCTION WITH SMALL MISSILE IMPACT RESISTANT DOORS HAVING VALID MIAMI-DADE PRODUCT APPROVAL. THE LOWER DESIGN PRESSURE BETWEEN THE STOREFRONT OR DOOR APPROVAL SHALL APPLY TO THE ENTIRE SYSTEM.

5. THE DESIGN LOADS OF THE LOCATION WHERE THE PRODUCT WILL BE USED MUST BE CERTIFIED BY A PROFESSIONAL ARCHITECT OR ENGINEER REGISTERED IN THE STATE OF FLORIDA FOR EACH SPECIFIC PROJECT.

6. IT SHALL BE RESPONSIBILITY OF THE CONTRACTOR, ARCHITECT OR ENGINEER OF RECORD TO VERIFY:
   - 6.1. THE STABILITY OF THE STRUCTURE WHERE THE PRODUCT IS TO BE INSTALLED TO ENSURE PROPER ANCHORAGE.
   - 6.2. THE PROJECT DESIGN CRITERIA AND APPLICABLE CODES AND ORDINANCES
   - 6.3. THE ADEQUACY AND APPLICABILITY OF THIS APPROVAL.

7. ANCHORS SHALL BE AS LISTED IN THIS DOCUMENT AND SPACED AS INDICATED ON SHEET 2, 3 AND 4. LISTED EMBEDMENT SHALL BE BEYOND EXTERIOR OR INTERIOR FINISH OF SUBSTRATES. A LOAD DURATION INCREASE HAS BEEN USED IN DESIGN OF ANCHORS INTO WOOD ONLY.

8. ANCHORING OR LOADING CONDITIONS NOT SHOWN ON THESE DETAILS ARE NOT PART OF THIS APPROVAL DOCUMENT.

9. ALUMINUM: ALL ALUMINUM EXTRUSIONS SHALL BE 6063-T6 ALLOY MINIMUM. PLEASE REFER TO SHEET 11 FOR BILL OF MATERIALS.

10. GLASS: THIS PRODUCT IS APPROVED TO BE GLAZED WITH THE FOLLOWING GLASS COMPOSITION

    GT-2. 9/16 " THK. LAMINATED GLASS: 1/4 " THK. FULLY TEMPERED + 0.060" SAFLEX CLEAR AND GLASS INTERLAYERS BY EASTMAN CHEMICAL COMPANY + 1/4" THK. FULLY TEMPERED

APPROVAL USE INSTRUCTIONS

1. DETERMINE APPLICABLE PROJECT WINDLOADS PER FBC APPROVED METHODS.
2. VERIFY GLASS CAPACITY BASED ON DIMENSIONS AND APPLICABLE PRESSURES PER TABLE ON SHEET 5 OF 19.
3. VERIFY MULLION CAPACITY BASED ON DIMENSIONS AND APPLICABLE PRESSURES PER TABLES ON SHEET 6 OF 19.
4. DETERMINE REQUIRED FASTENERS FOR PROJECT DIMENSIONS, SUBSTRATES AND WINDLOAD REQUIREMENTS PER TABLES ON SHEETS 8 AND 9 OF 19.
5. LOWEST PRESSURE FROM STEPS 2 THROUGH 4 ABOVE SHALL CONTROL THE ALLOWABLE PRESSURE FOR THE OPENING.
6. FOR JAMBS USED AS DOOR MULLIONS VERIFY CAPACITY PER TABLE ON SHEET 7 OF 19.
7. WHEN DOORS ARE CONNECTED TO SYSTEM, MINIMUM ALLOWABLE PRESSURE BETWEEN THIS NOA AND DOOR NOA SHALL CONTROL ALLOWABLE PRESSURE FOR ENTIRE OPENING.

DRAWINGS INDEX

SHEET	TITLE	REV	DATE
1	COVER SHEET	2	9/3/2014
2	TYPICAL ELEVATION	1	7/26/2014
3	TYPICAL ELEVATION	2	9/3/2014
4	ANCHOR LAYOUT / GLAZING DET.	2	9/3/2014
5	GLASS CAPACITY CHART	2	9/3/2014
6	MULLION CAPACITY CHART	2	9/3/2014
7	JAMB CAPACITY CHART	2	9/3/2014
8	ANCHOR CAPACITY CHART	2	9/3/2014
9	ANCHOR CAPACITY CHART	2	9/3/2014
10	TYPICAL DETAILS	2	9/3/2014
11	TYPICAL DETAILS	2	9/3/2014
12	TYPICAL DETAILS	2	9/3/2014
13	TYPICAL DETAILS	2	9/3/2014
14	TYPICAL DETAILS	2	9/3/2014
15	TYPICAL DETAILS	2	9/3/2014
16	TYPICAL DETAILS	2	9/3/2014
17	EXTRUSION DIMENSIONS	1	7/26/2014
18	BILL OF MATERIALS	1	7/26/2014
19	ISOMETRIC DRAWING	2	9/3/2014

Approved as complying with the Florida Building Code
Date Sept. 11 2014
NOA# 14-0415.07
Miami Dade Product Control
By Manuel Perez

MANUEL MORALES LICENSE No 71643 STATE OF FLORIDA PROFESSIONAL ENGINEER

GLOBAL PERFORMANCE WINDOWS, INC
D.B.A. EPSYLON, USA

2115 S.W. 2ND STREET
POMPANO BEACH, FL 33069
PH: 954.942.3322
FAX: 954.942.3215
www.epsylon.ca

PROJECT NAME
ALUMINUM WINDOW WALL SERIES WW4SG SMALL MISSILE IMPACT

SHEET TITLE
COVER SHEET

SCALE: n.t.s.

PREPARED BY: FEEC	DRAWN BY: O.C.
ISSUE DATE: 4/04/14	REVIEWED BY: M.M.

DRAWING REVISION LOG

No.	Date:	Revision:
1	7/26/2014	PER MDC COMMENTS
2	9/3/2014	PER MDC COMMENTS

ENGINEER:
FACADE AND ENVELOPE
ENGINEERING CONSULTANTS, LLC
CA# 30168
8950 SW 74th Court
22nd Floor Suite A-31
Miami, FL 33156 | (786) 592-0181

SIGNED AND SEALED DRAWINGS CHECKED FOR STRUCTURAL COMPLIANCE ONLY BY:
FACADE AND ENVELOPE ENGINEERING CONSULTANTS, LLC

9/03/14
MANUEL MORALES, P.E.
FL. REG. # 71643

DWG. EUSA MDC-004

EPSYLON - WW 4SG LAMINATED WINDOW WALL SYSTEMS (S.M.I)

MIAMI-DADE COUNTY APPROVED IMPACT RESISTANT SHUTTERS ARE NOT REQUIRED FOR INSTALLATIONS AT 30'-0" AND GREATER ABOVE GRADE.

GENERAL NOTES:

- IMPACT RATE: SMALL MISSILE IMPACT
- DESIGN PRESSURE: SEE TABLES ON PAGES 5 THRU 9
- GLASS: GT-2: (SEE GLASS DESCRIPTION ON PAGE 1)
- GLASS BITE: SEE DETAILS
- JAMBS: 2 1/2" JAMBS
- MULLION: 4" MULLION
- ALUMINUM ALLOY: 6063-T6
- REINFORCEMENT: AT DOOR JAMBS AND VERTICAL MULLIONS (SEE TABLE ON PAGES 6 AND 7)
- CONCRETE fc: 3000 PSI MIN.
- REFER TO BILL OF MATERIAL FOR COMPLETE DESCRIPTION FOR ALL PRODUCTS ON PAGE 18.

THIS PRODUCT HAS BEEN DESIGNED AND TESTED TO COMPLY WITH THE REQUIREMENTS OF THE FLORIDA BUILDING CODE 2010 EDITION INCLUDING HIGH VELOCITY HURRICANE ZONE (HVHZ)

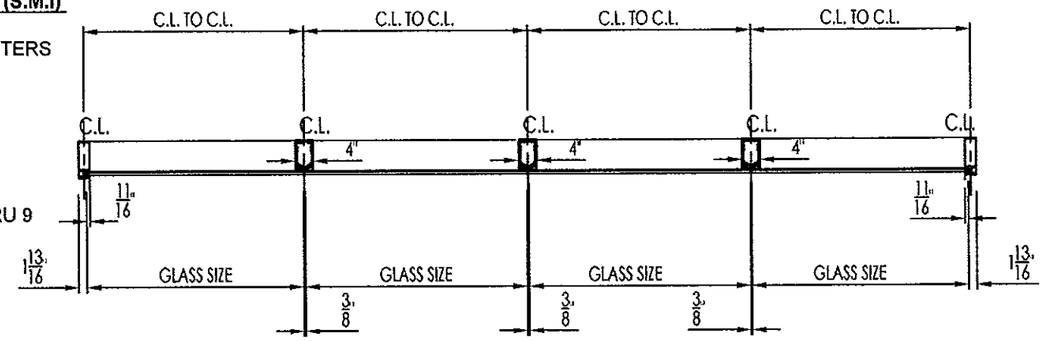

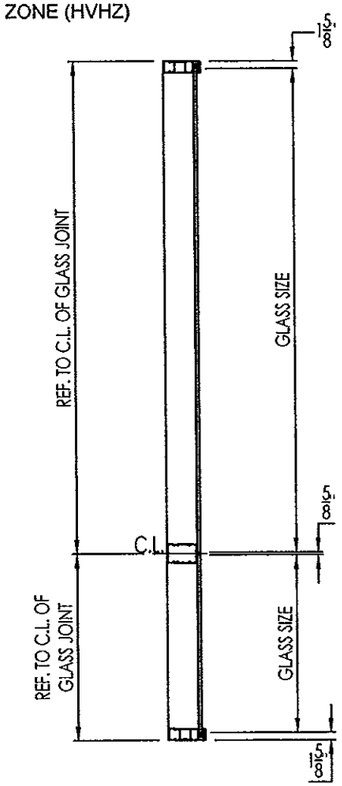

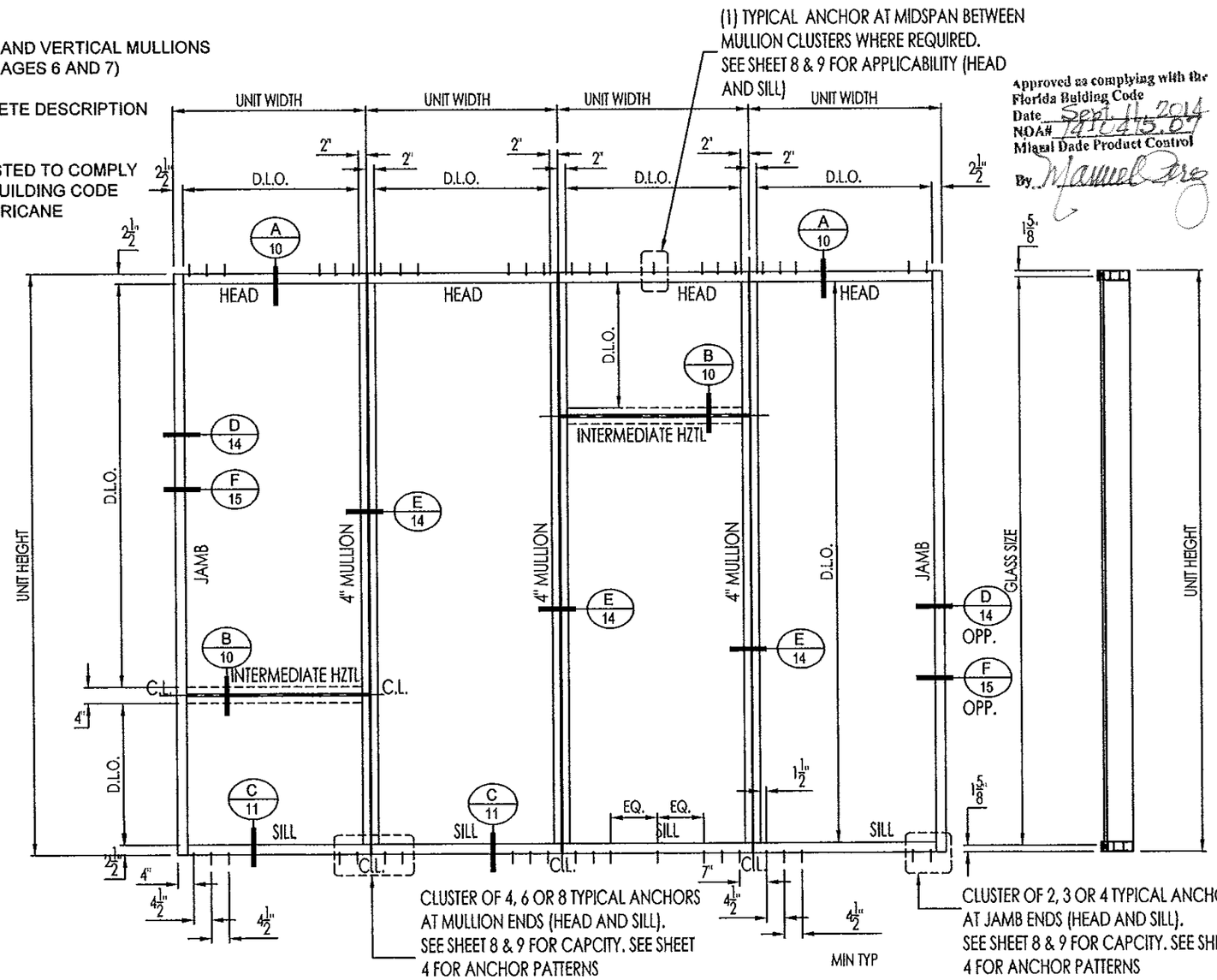

Approved as complying with the Florida Building Code
Date Sept 11, 2014
NOA# 14-0415.04
Miami Dade Product Control
By Manuel Perez

GLOBAL PERFORMANCE WINDOWS, INC
D.B.A. EPSYLON, USA

2115 S.W. 2ND STREET
POMPANO BEACH, FL 33069
PH: 954.942.3322
FAX: 954.942.3215
www.epsylon.ca

PROJECT NAME
ALUMINUM WINDOW WALL SERIES WW4SG SMALL MISSILE IMPACT

SHEET TITLE
TYPICAL ELEVATIONS

SCALE: 3/8" = 1'-0"

PREPARED BY: FEEC	DRAWN BY: O.C.
ISSUE DATE: 4/04/14	REVIEWED BY: M.M.

DRAWING REVISION LOG

No.	Date:	Revision:
1	7/26/2014	PER MDC COMMENTS
2	9/3/2014	PER MDC COMMENTS

ENGINEER:
FACADE AND ENVELOPE ENGINEERING CONSULTANTS, LLC
CA# 30168
8950 SW 74th Court
22nd Floor Suite A-31
Miami, FL 33156 | (786) 592-0181

SIGNED AND SEALED DRAWINGS CHECKED FOR STRUCTURAL CONFIGURATION ONLY

FACADE AND ENVELOPE ENGINEERING CONSULTANTS, LLC
MANUEL MORALES
LICENSE No 71843
STATE OF FLORIDA
PROFESSIONAL ENGINEER
9/9/14

DWG No.
EUSA MDC-004

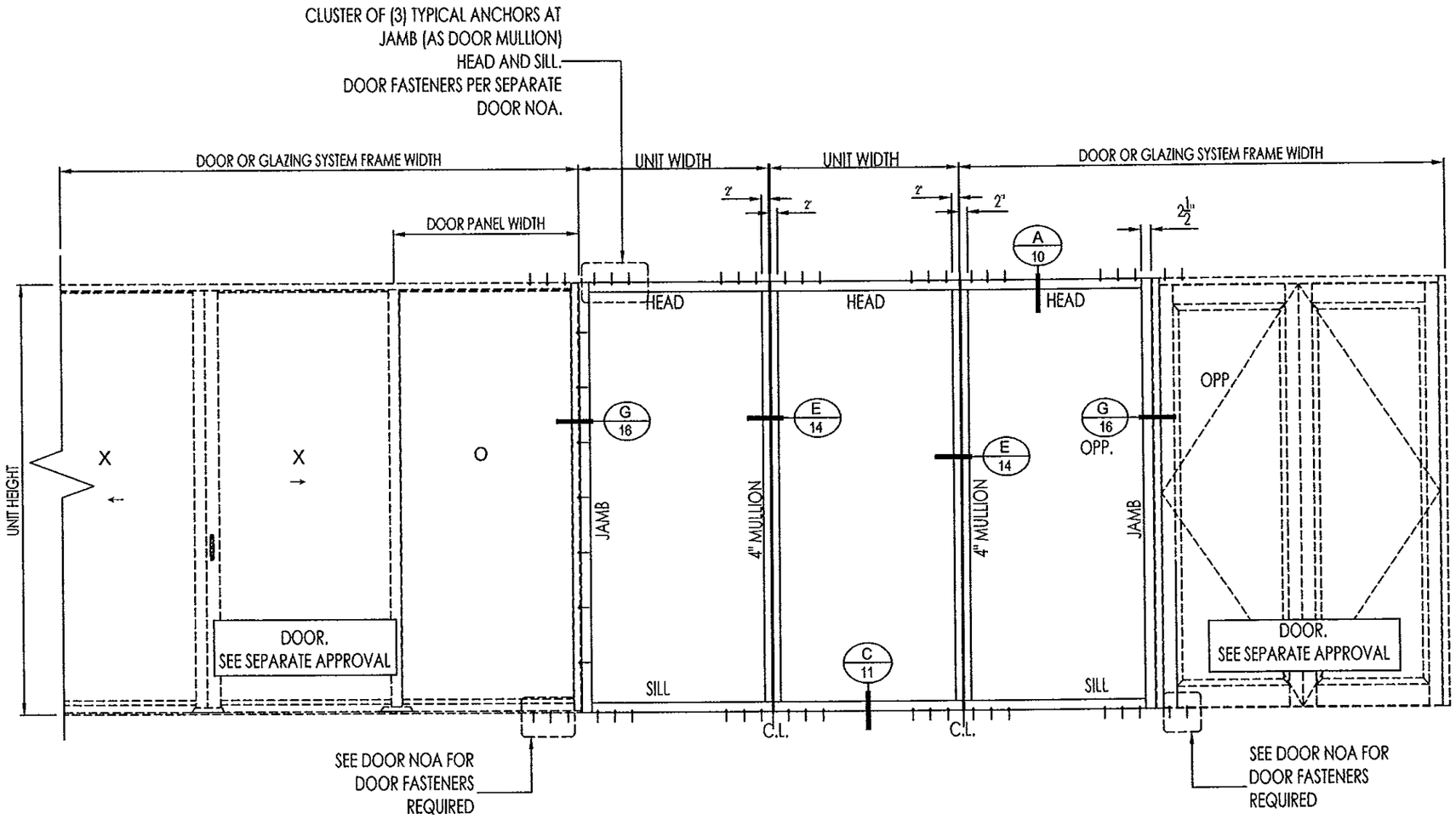

Approved as complying with the Florida Building Code
Date Sept. 11, 2014
NOA# 14-10415.07
Miami Dade Product Control
By Manuel Perez

MANUEL MORALES
LICENSE
No 71643
STATE OF FLORIDA
PROFESSIONAL ENGINEER

GLOBAL PERFORMANCE WINDOWS, INC

D.B.A. EPSYLON, USA

2115 S.W. 2ND STREET
POMPANO BEACH, FL 33069
PH: 954.942.3322
FAX: 954.942.3215
www.epsylon.ca

PROJECT NAME

ALUMINUM WINDOW WALL
SERIES WW4SG
SMALL MISSILE IMPACT

SHEET TITLE

TYPICAL ELEVATIONS

SCALE: 3/8" = 1'-0"

PREPARED BY: FEEC	DRAWN BY: O.C.
ISSUE DATE: 4/04/14	REVIEWED BY: M.M.

DRAWING REVISION LOG

No.	Date:	Revision:
1	7/26/2014	PER MDC COMMENTS
2	9/3/2014	PER MDC COMMENTS

ENGINEER:

FACADE AND ENVELOPE
ENGINEERING CONSULTANTS, LLC
CA# 30168
8950 SW 74th Court
22nd Floor Suite A-31
Miami, FL 33156 | (786) 592-0181

SIGNED AND SEALED DRAWINGS CHECKED FOR STRUCTURAL COMPLIANCE ONLY BY:

FACADE AND ENVELOPE
ENGINEERING CONSULTANTS, LLC

9/03/14

MANUEL MORALES, P.E.
FL. REG. # 71643

DWG No. EUSA MDC-004

SHEET 3 OF 19

ANCHOR LAYOUTS AT HEAD AND SILL

4 BOLTS

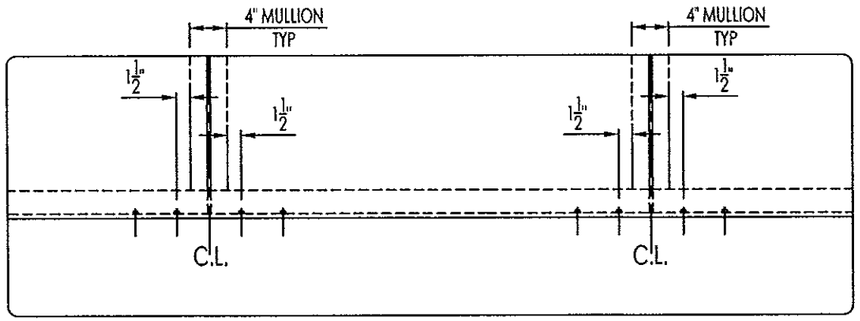

6 BOLTS

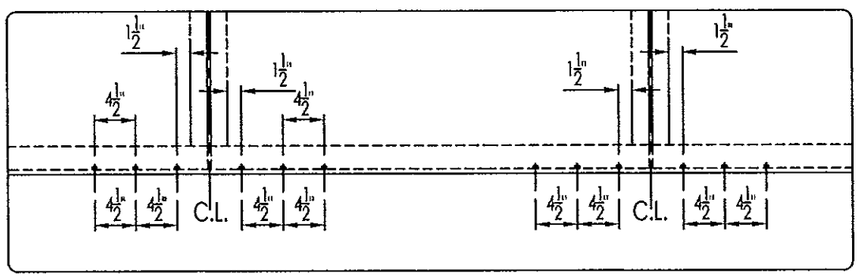

6 + 1 BOLTS

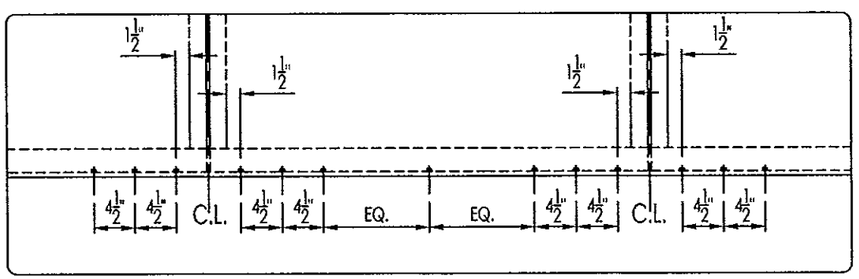

8 BOLTS

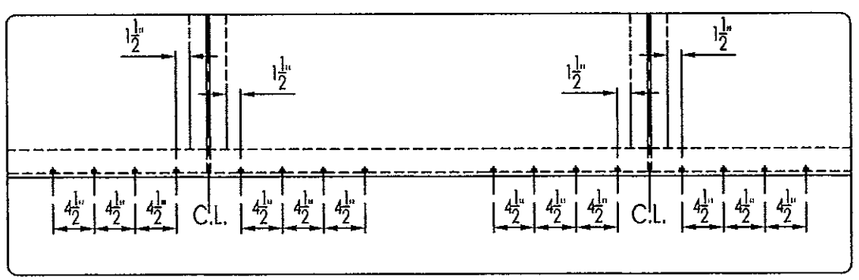

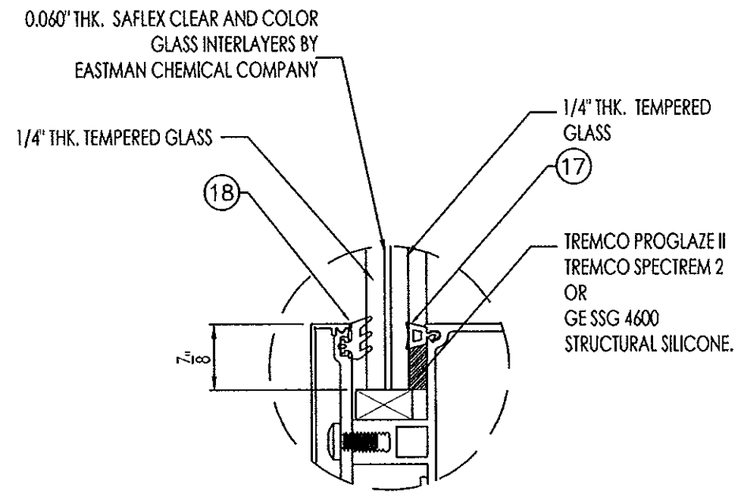

GLASS TYPE 2: (GT-2)
HEAD AND SILL
GLAZING DETAIL

Approved as complying with the
Florida Building Code
Date Sept. 11, 2014
NOA# 14110415.07
Miami Dade Product Control
By Manuel Perez

MANUEL MORALES
LICENSE
No 71643
STATE OF
FLORIDA
PROFESSIONAL ENGINEER

9/03/14

MANUEL MORALES, P.E.
FL. REG. # 71643

GLOBAL
PERFORMANCE
WINDOWS, INC
D.B.A. EPSYLON, USA

2115 S.W. 2ND STREET
POMPANO BEACH, FL 33069
PH: 954.942.3322
FAX: 954.942.3215
www.epsylon.ca

PROJECT NAME

ALUMINUM WINDOW WALL
SERIES WW4SG
SMALL MISSILE IMPACT

SHEET TITLE

ANCHOR LAYOUTS
AND
GLAZING DETAIL

SCALE: 3/8" = 1'-0"

PREPARED BY: FEEC	DRAWN BY: O.C.
ISSUE DATE: 4/04/14	REVIEWED BY: M.M.

DRAWING REVISION LOG

No.	Date:	Revision:
1	7/26/2014	PER MDC COMMENTS
2	9/3/2014	PER MDC COMMENTS

ENGINEER:

FACADE AND ENVELOPE
ENGINEERING CONSULTANTS, LLC
CA# 30168
8950 SW 74th Court
22nd Floor Suite A-31
Miami, FL 33156 | (786) 592-0181

SIGNED AND SEALED DRAWINGS
CHECKED FOR STRUCTURAL
COMPLIANCE ONLY BY:

FACADE AND ENVELOPE
ENGINEERING CONSULTANTS, LLC

DWG No.
EUSA MDC-004
SHEET 4 OF 19

GLASS BITE (in) AND GLASS LOAD CAPACITY (PSF)

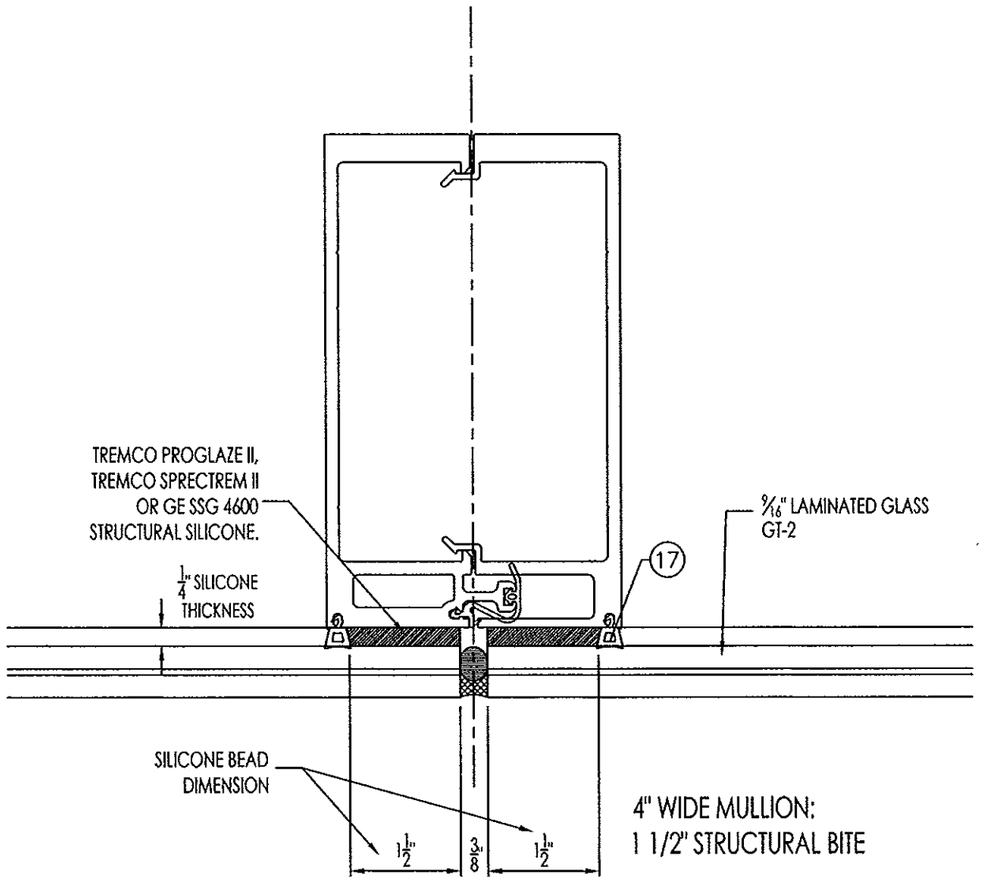

4" WIDE MULLION:
1 1/2" STRUCTURAL BITE

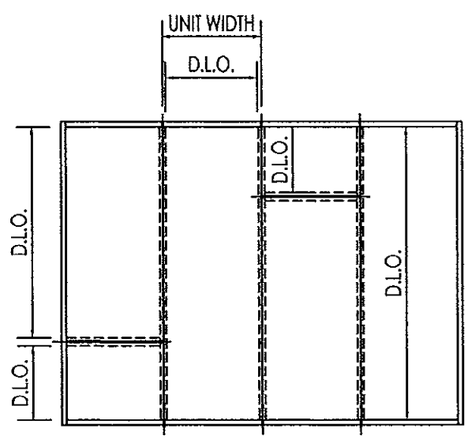

GLASS CAPACITIES BASED ON ASTM E1300-09
WITH 3 SEC GUSTS, LIMITED TO MAXIMUM CYCLIC TEST PRESSURE

INTERPOLATION BETWEEN WIDTHS
OR HEIGHTS IS PERMITTED.

		Allowable Pressure	
DLO Width W (in)	DLO Height L (in)	Pos (+) PSF	Neg (-) PSF
32	103	180.0	-180.0
38	103	180.0	-180.0
44	103	180.0	-180.0
50	103	180.0	-180.0
56	103	180.0	-180.0
32	109	180.0	-180.0
38	109	180.0	-180.0
44	109	180.0	-180.0
50	109	180.0	-180.0
56	109	180.0	-180.0
32	115	180.0	-180.0
38	115	180.0	-180.0
44	115	180.0	-180.0
50	115	180.0	-180.0
56	115	180.0	-180.0
32	121	180.0	-180.0
38	121	180.0	-180.0
44	121	180.0	-180.0
50	121	180.0	-180.0
56	121	180.0	-180.0
32	127	180.0	-180.0
38	127	180.0	-180.0
44	127	180.0	-180.0
50	127	180.0	-180.0
32	133	180.0	-180.0
38	133	180.0	-180.0
44	133	180.0	-180.0
32	139	180.0	-180.0
38	139	180.0	-180.0
44	139	180.0	-180.0

Approved as complying with the Florida Building Code
Date Sept. 11, 2014
NOA# 14-0415.07
Miami Dade Product Control
By Manuel Perez

MANUEL MORALES
LICENSE
No 71643
STATE OF FLORIDA
PROFESSIONAL ENGINEER

9/03/14

MANUEL MORALES, P.E.
FL. REG. # 71643

GLOBAL PERFORMANCE WINDOWS, INC
D.B.A. EPSYLON, USA

2115 S.W. 2ND STREET
POMPANO BEACH, FL 33069
PH: 954.942.3322
FAX: 954.942.3215
www.epsylon.ca

PROJECT NAME
ALUMINUM WINDOW WALL
SERIES WW4SG
SMALL MISSILE IMPACT

SHEET TITLE
GLASS CAPACITY CHART

SCALE: n.t.s.

PREPARED BY: FEEC	DRAWN BY: O.C.
ISSUE DATE: 4/04/14	REVIEWED BY: M.M.

DRAWING REVISION LOG

No.	Date:	Revision:
1	7/26/2014	PER MDC COMMENTS
2	9/3/2014	PER MDC COMMENTS

ENGINEER:
FACADE AND ENVELOPE
ENGINEERING CONSULTANTS, LLC
CA# 30168
8950 SW 74th Court
22nd Floor Suite A-31
Miami, FL 33156 | (786) 592-0181

SIGNED AND SEALED DRAWINGS CHECKED FOR STRUCTURAL COMPLIANCE ONLY BY:
FACADE AND ENVELOPE ENGINEERING CONSULTANTS, LLC

DWG No. EUSA MDC-004

MULLION DESIGN LOAD CAPACITY (PSF)
WITH OR WITHOUT INTERMEDIATE HORIZONTAL

		Allowable Pressure (PSF)			
Panel Dimensions (in)		MULLION M1		MULLION M2	
Width	Height	POS (+)	NEG (-)	POS (+)	NEG (-)
36	96	210.0	-210.0	210.0	-210.0
42	96	210.0	-210.0	210.0	-210.0
48	96	210.0	-210.0	210.0	-210.0
54	96	210.0	-210.0	210.0	-210.0
60	96	210.0	-210.0	210.0	-210.0
36	102	210.0	-210.0	210.0	-210.0
42	102	210.0	-210.0	210.0	-210.0
48	102	210.0	-210.0	210.0	-210.0
54	102	210.0	-210.0	210.0	-210.0
60	102	140.0	-140.0	180.0	-180.0
36	108	210.0	-210.0	210.0	-210.0
42	108	210.0	-210.0	210.0	-210.0
48	108	210.0	-210.0	210.0	-210.0
54	108	140.0	-140.0	180.0	-180.0
60	108	140.0	-140.0	180.0	-180.0
36	114	210.0	-210.0	210.0	-210.0
42	114	210.0	-210.0	210.0	-210.0
48	114	140.0	-140.0	180.0	-180.0
54	114	140.0	-140.0	180.0	-180.0
60	114	140.0	-140.0	180.0	-180.0
36	120	210.0	-210.0	210.0	-210.0
42	120	140.0	-140.0	180.0	-180.0
48	120	140.0	-140.0	180.0	-180.0
54	120	140.0	-140.0	180.0	-180.0
60	120	140.0	-140.0	180.0	-180.0
36	126	210.0	-210.0	210.0	-210.0
42	126	140.0	-140.0	180.0	-180.0
48	126	140.0	-140.0	180.0	-180.0
54	126	140.0	-140.0	180.0	-180.0
60	126	140.0	-140.0	180.0	-180.0
36	132	210.0	-210.0	210.0	-210.0
42	132	140.0	-140.0	180.0	-180.0
48	132	140.0	-140.0	180.0	-180.0
54	132	140.0	-140.0	180.0	-180.0
36	138	140.0	-140.0	180.0	-180.0
42	138	140.0	-140.0	180.0	-180.0
48	138	140.0	-140.0	180.0	-180.0
36	144	140.0	-140.0	180.0	-180.0
40	144	140.0	-140.0	180.0	-180.0
48	144	140.0	-140.0	180.0	-180.0
36	145.5	140.0	-140.0	180.0	-180.0
40	145.5	140.0	-140.0	180.0	-180.0
48	145.5	140.0	-140.0	180.0	-180.0

INTERPOLATION BETWEEN WIDTHS OR HEIGHTS IS PERMITTED.

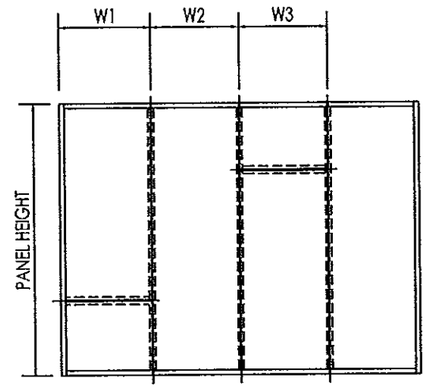

NOMINAL WIDTHS:

AT JAMBS $W = W1$ AT MULLIONS $W = \frac{W2 + W3}{2}$

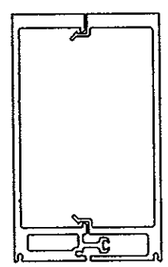

MULLION M1
4" WIDE MULLION

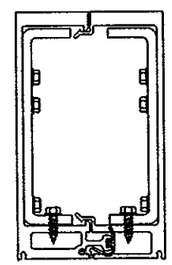

MULLION M2
4" WIDE MULLION
WITH STEEL REINFOCEMENT

Approved as complying with the Florida Building Code
Date Sept. 11, 2014
NOA# 14-0415.07
Miami Dade Product Control
By Manuel Jorge

MANUEL MORALES
LICENSE
No 71643
STATE OF FLORIDA
PROFESSIONAL ENGINEER

GLOBAL PERFORMANCE WINDOWS, INC
D.B.A. EPSYLON, USA

2115 S.W. 2ND STREET
POMPANO BEACH, FL 33069
PH: 954.942.3322
FAX: 954.942.3215
www.epsylon.ca

PROJECT NAME

ALUMINUM WINDOW WALL
SERIES WW4SG
SMALL MISSILE IMPACT

SHEET TITLE

MULLION CAPACITY CHART

SCALE: N.T.S.

PREPARED BY: FEEC	DRAWN BY: O.C.
ISSUE DATE: 4/04/14	REVIEWED BY: M.M.

DRAWING REVISION LOG

No.	Date:	Revision:
1	7/26/2014	PER MDC COMMENTS
2	9/3/2014	PER MDC COMMENTS

ENGINEER:

FACADE AND ENVELOPE
ENGINEERING CONSULTANTS, LLC
CA# 30168
8950 SW 74th Court
22nd Floor Suite A-31
Miami, FL 33156 | (786) 592-0181

SIGNED AND SEALED DRAWINGS CHECKED FOR STRUCTURAL COMPLIANCE ONLY BY:

FACADE AND ENVELOPE ENGINEERING CONSULTANTS, LLC

9/03/14

MANUEL MORALES, P.E.
FL. REG. # 71643

DWG No.
EUSA MDC-004
SHEET 6 OF 19

REINFORCED JAMB DESIGN LOAD CAPACITY (PSF) AS DOOR MULLION

		Allowable Pressure (PSF)	
Panel Dimensions (in)		JAMB J1	
Width	Height	POS (+)	NEG (-)
36	96	110.0	-140.0
42	96	110.0	-140.0
48	96	110.0	-140.0
54	96	110.0	-140.0
60	96	110.0	-140.0
36	102	110.0	-140.0
42	102	110.0	-140.0
48	102	110.0	-140.0
54	102	110.0	-140.0
60	102	110.0	-140.0
36	108	110.0	-140.0
42	108	110.0	-140.0
48	108	110.0	-140.0
54	108	110.0	-140.0
60	108	110.0	-140.0
36	114	110.0	-140.0
42	114	110.0	-140.0
48	114	110.0	-140.0
54	114	110.0	-140.0
60	114	110.0	-140.0
36	120	110.0	-140.0
42	120	110.0	-140.0
48	120	110.0	-140.0
54	120	110.0	-140.0
36	126	110.0	-140.0
42	126	110.0	-140.0
48	126	110.0	-140.0
36	132	110.0	-140.0
42	132	110.0	-140.0
48	132	110.0	-140.0

INTERPOLATION BETWEEN WIDTHS OR HEIGHTS IS PERMITTED.

MINIMUM ALLOWABLE PRESSURE OF WINDOW WALL SYSTEM OR DOOR SYSTEM SHALL CONTROL ALLOWABLE PRESSURE OF ENTIRE OPENING.

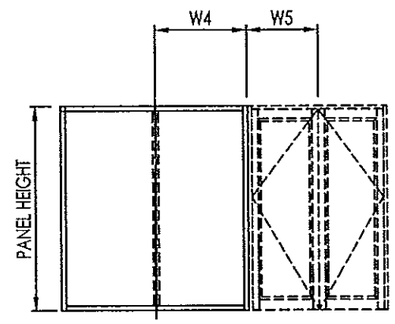

$$\text{WIDTH} = \frac{W4 + W5}{2}$$

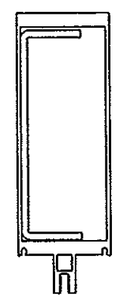

JAMB J1
REINFORCED
JAMB AS
DOOR MULLION

Approved as complying with the Florida Building Code
Date Sept. 11, 2014
NOA# 14-0415.04
Miami Dade Product Control
By. Manuel Perez

MANUEL MORALES LICENSE No 71643 STATE OF FLORIDA PROFESSIONAL ENGINEER

9/03/14

MANUEL MORALES, P.E.
FL. REG. # 71643

GLOBAL PERFORMANCE WINDOWS, INC
D.B.A. EPSYLON, USA

2115 S.W. 2ND STREET
POMPANO BEACH, FL 33069
PH: 954.942.3322
FAX: 954.942.3215
www.epsylon.ca

PROJECT NAME
ALUMINUM WINDOW WALL
SERIES WW4SG
SMALL MISSILE IMPACT

SHEET TITLE
MULLION CAPACITY CHARTS

SCALE: N.T.S.

PREPARED BY: FEEC	DRAWN BY: O.C.
ISSUE DATE: 4/04/14	REVIEWED BY: M.M.

DRAWING REVISION LOG

No.	Date:	Revision:
1	7/26/2014	PER MDC COMMENTS
2	9/3/2014	PER MDC COMMENTS

ENGINEER:
FACADE AND ENVELOPE
ENGINEERING CONSULTANTS, LLC
CA# 30168
8950 SW 74th Court
22nd Floor Suite A-31
Miami, FL 33156 | (786) 592-0181

SIGNED AND SEALED DRAWINGS CHECKED FOR STRUCTURAL COMPLIANCE ONLY BY:
FACADE AND ENVELOPE ENGINEERING CONSULTANTS, LLC

DWG No.
EUSA MDC-004
SHEET 7 OF 19

INTERPOLATION BETWEEN WIDTHS OR HEIGHTS IS PERMITTED.

* = AT PANELS WIDER THAN 48" INSTALL ONE (1) ADDITIONAL TYPICAL ANCHOR AT CENTER OF PANEL

ALLOWABLE PRESSURE (OSF) BASED ON CLUSTER OF BOLTS AT HEAD AND SILL FOR½" SHIM GAP

Panel Dimensions (in)		Type A				Type B				Type C				Type D				Type E			
Width	Height	4 bolts		6 bolts		4 bolts		6 bolts		4 bolts		6 bolts		4 bolts		6 bolts		4 bolts		6 bolts	
		Pos (+)	Neg (-)	Pos (+)	Neg (-)	Pos (+)	Neg (-)	Pos (+)	Neg (-)	Pos (+)	Neg (-)	Pos (+)	Neg (-)	Pos (+)	Neg (-)	Pos (+)	Neg (-)	Pos (+)	Neg (-)	Pos (+)	Neg (-)
36	96	140.0	140.0	140.0	140.0	140.0	140.0	140.0	140.0	124.3	124.3	140.0	140.0	140.0	140.0	140.0	140.0	140.0	140.0	140.0	140.0
42	96	140.0	140.0	140.0	140.0	129.4	129.4	140.0	140.0	106.5	106.5	140.0	140.0	140.0	140.0	140.0	140.0	129.4	129.4	140.0	140.0
48	96	140.0	140.0	140.0	140.0	113.3	113.3	140.0	140.0	93.2	93.2	139.8	139.8	140.0	140.0	140.0	140.0	113.3	113.3	140.0	140.0
* 54	96	133.9	133.9	140.0	140.0	100.7	100.7	140.0	140.0	82.9	82.9	124.3	124.3	140.0	140.0	140.0	140.0	100.7	100.7	140.0	140.0
* 60	96	120.5	120.5	140.0	140.0	90.6	90.6	135.9	135.9	74.6	74.6	111.9	111.9	140.0	140.0	140.0	140.0	90.6	90.6	135.9	135.9
36	102	140.0	140.0	140.0	140.0	140.0	140.0	140.0	140.0	117.0	117.0	140.0	140.0	140.0	140.0	140.0	140.0	140.0	140.0	140.0	140.0
42	102	140.0	140.0	140.0	140.0	121.8	121.8	140.0	140.0	100.3	100.3	140.0	140.0	140.0	140.0	140.0	140.0	121.8	121.8	140.0	140.0
48	102	140.0	140.0	140.0	140.0	106.6	106.6	140.0	140.0	87.7	87.7	131.6	131.6	140.0	140.0	140.0	140.0	106.6	106.6	140.0	140.0
* 54	102	126.0	126.0	140.0	140.0	94.7	94.7	140.0	140.0	78.0	78.0	117.0	117.0	140.0	140.0	140.0	140.0	94.7	94.7	140.0	140.0
* 60	102	113.4	113.4	140.0	140.0	85.3	85.3	127.9	127.9	70.2	70.2	105.3	105.3	138.5	138.5	140.0	140.0	85.3	85.3	127.9	127.9
36	108	140.0	140.0	140.0	140.0	134.2	134.2	140.0	140.0	110.5	110.5	140.0	140.0	140.0	140.0	140.0	140.0	134.2	134.2	140.0	140.0
42	108	140.0	140.0	140.0	140.0	115.0	115.0	140.0	140.0	94.7	94.7	140.0	140.0	140.0	140.0	140.0	140.0	115.0	115.0	140.0	140.0
48	108	133.9	133.9	140.0	140.0	100.7	100.7	140.0	140.0	82.9	82.9	124.3	124.3	140.0	140.0	140.0	140.0	100.7	100.7	140.0	140.0
* 54	108	119.0	119.0	140.0	140.0	89.5	89.5	134.2	134.2	73.7	73.7	110.5	110.5	140.0	140.0	140.0	140.0	89.5	89.5	134.2	134.2
* 60	108	107.1	107.1	140.0	140.0	80.5	80.5	120.8	120.8	66.3	66.3	99.4	99.4	130.8	130.8	140.0	140.0	80.5	80.5	120.8	120.8
36	114	140.0	140.0	140.0	140.0	127.2	127.2	140.0	140.0	104.7	104.7	140.0	140.0	140.0	140.0	140.0	140.0	127.2	127.2	140.0	140.0
42	114	140.0	140.0	140.0	140.0	109.0	109.0	140.0	140.0	89.7	89.7	134.6	134.6	140.0	140.0	140.0	140.0	109.0	109.0	140.0	140.0
48	114	126.8	126.8	140.0	140.0	95.4	95.4	140.0	140.0	78.5	78.5	117.8	117.8	140.0	140.0	140.0	140.0	95.4	95.4	140.0	140.0
* 54	114	112.7	112.7	140.0	140.0	84.8	84.8	127.2	127.2	69.8	69.8	104.7	104.7	137.6	137.6	140.0	140.0	84.8	84.8	127.2	127.2
* 60	114	101.5	101.5	140.0	140.0	76.3	76.3	114.4	114.4	62.8	62.8	94.2	94.2	123.9	123.9	140.0	140.0	76.3	76.3	114.4	114.4
36	120	140.0	140.0	140.0	140.0	120.8	120.8	140.0	140.0	99.4	99.4	140.0	140.0	140.0	140.0	140.0	140.0	120.8	120.8	140.0	140.0
42	120	137.7	137.7	140.0	140.0	103.5	103.5	140.0	140.0	85.2	85.2	127.8	127.8	140.0	140.0	140.0	140.0	103.5	103.5	140.0	140.0
48	120	120.5	120.5	140.0	140.0	90.6	90.6	135.9	135.9	74.6	74.6	111.9	111.9	140.0	140.0	140.0	140.0	90.6	90.6	135.9	135.9
* 54	120	107.1	107.1	140.0	140.0	80.5	80.5	120.8	120.8	66.3	66.3	99.4	99.4	130.8	130.8	140.0	140.0	80.5	80.5	120.8	120.8
* 60	120	96.4	96.4	140.0	140.0	72.5	72.5	108.7	108.7	59.7	59.7	89.5	89.5	117.7	117.7	140.0	140.0	72.5	72.5	108.7	108.7
36	126	140.0	140.0	140.0	140.0	115.0	115.0	140.0	140.0	94.7	94.7	140.0	140.0	140.0	140.0	140.0	140.0	115.0	115.0	140.0	140.0
42	126	131.1	131.1	140.0	140.0	98.6	98.6	140.0	140.0	81.2	81.2	121.8	121.8	140.0	140.0	140.0	140.0	98.6	98.6	140.0	140.0
48	126	114.8	114.8	140.0	140.0	86.3	86.3	129.4	129.4	71.0	71.0	106.5	106.5	140.0	140.0	140.0	140.0	86.3	86.3	129.4	129.4
* 54	126	102.0	102.0	140.0	140.0	76.7	76.7	115.0	115.0	63.1	63.1	94.7	94.7	124.5	124.5	140.0	140.0	76.7	76.7	115.0	115.0
* 60	126	91.8	91.8	137.7	137.7	69.0	69.0	103.5	103.5	56.8	56.8	85.2	85.2	112.1	112.1	140.0	140.0	69.0	69.0	103.5	103.5
36	132	140.0	140.0	140.0	140.0	109.8	109.8	140.0	140.0	90.4	90.4	135.6	135.6	140.0	140.0	140.0	140.0	109.8	109.8	140.0	140.0
42	132	125.2	125.2	140.0	140.0	94.1	94.1	140.0	140.0	77.5	77.5	116.2	116.2	140.0	140.0	140.0	140.0	94.1	94.1	140.0	140.0
48	132	109.5	109.5	140.0	140.0	82.4	82.4	123.5	123.5	67.8	67.8	101.7	101.7	133.7	133.7	140.0	140.0	82.4	82.4	123.5	123.5
* 54	132	97.4	97.4	140.0	140.0	73.2	73.2	109.8	109.8	60.3	60.3	90.4	90.4	118.9	118.9	140.0	140.0	73.2	73.2	109.8	109.8
36	138	139.7	139.7	140.0	140.0	105.0	105.0	140.0	140.0	86.5	86.5	129.7	129.7	140.0	140.0	140.0	140.0	105.0	105.0	140.0	140.0
42	138	119.7	119.7	140.0	140.0	90.0	90.0	135.1	135.1	74.1	74.1	111.2	111.2	140.0	140.0	140.0	140.0	90.0	90.0	135.1	135.1
48	138	104.8	104.8	140.0	140.0	78.8	78.8	118.2	118.2	64.9	64.9	97.3	97.3	127.9	127.9	140.0	140.0	78.8	78.8	118.2	118.2
36	144	133.9	133.9	140.0	140.0	100.7	100.7	140.0	140.0	82.9	82.9	124.3	124.3	140.0	140.0	140.0	140.0	100.7	100.7	140.0	140.0
42	144	114.8	114.8	140.0	140.0	86.3	86.3	129.4	129.4	71.0	71.0	106.5	106.5	140.0	140.0	140.0	140.0	86.3	86.3	129.4	129.4
48	144	100.4	100.4	140.0	140.0	75.5	75.5	113.3	113.3	62.1	62.1	93.2	93.2	122.6	122.6	140.0	140.0	75.5	75.5	113.3	113.3
36	145.5	132.5	132.5	140.0	140.0	99.6	99.6	140.0	140.0	82.0	82.0	123.0	123.0	140.0	140.0	140.0	140.0	99.6	99.6	140.0	140.0
42	145.5	113.6	113.6	140.0	140.0	85.4	85.4	128.1	128.1	70.3	70.3	105.4	105.4	138.7	138.7	140.0	140.0	85.4	85.4	128.1	128.1
48	145.5	99.4	99.4	140.0	140.0	74.7	74.7	112.1	112.1	61.5	61.5	92.3	92.3	121.3	121.3	140.0	140.0	74.7	74.7	112.1	112.1

Approved as complying with the Florida Building Code
Date Sept 4 2014
NOA# 14-0415.07
Miami Dade Product Control
By Manuel Inez

GLOBAL PERFORMANCE WINDOWS, INC
D.B.A. EPSYLON, USA

2115 S.W. 2ND STREET
POMPANO BEACH, FL 33069
PH: 954.942.3322
FAX: 954.942.3215
www.epsylon.ca

PROJECT NAME

ALUMINUM WINDOW WALL
SERIES WW4SG
SMALL MISSILE IMPACT

SHEET TITLE

ANCHOR CAPACITY CHARTS

SCALE: N.T.S.

PREPARED BY: FEEC	DRAWN BY: O.C.
ISSUE DATE: 4/04/14	REVIEWED BY: M.M.

DRAWING REVISION LOG

No.	Date:	Revision:
1	7/26/2014	PER MDC COMMENTS
2	9/3/2014	PER MDC COMMENTS

ENGINEER:

FACADE AND ENVELOPE
ENGINEERING CONSULTANTS, LLC
CA# 30168
8950 SW 74th Court
22nd Floor Suite A-31
Miami, FL 33156 | (786) 592-0181

SIGNED AND SEALED DRAWINGS
ELECTRICAL & STRUCTURAL
COVERING ONLY BY:
FACADE AND ENVELOPE
ENGINEERING CONSULTANTS, LLC

MANUEL INIGUEZ
LICENSE No 71643
STATE OF FLORIDA
PROFESSIONAL ENGINEER
9/03/14
MANUEL INIGUEZ, P.E.
FL. REG. # 71643

DWG No.
EUSA MDC-004
SHEET 8 OF 19

INTERPOLATION BETWEEN WIDTHS OR HEIGHTS IS PERMITTED.

* = AT PANELS WIDER THAN 48" INSTALL ONE (1) ADDITIONAL TYPICAL ANCHOR AT CENTER OF PANEL

ALLOWABLE PRESSURE (OSF) BASED ON CLUSTER OF BOLTS AT HEAD AND SILL FOR½" SHIM GAP

Panel Dimensions (In)		Type A				Type B				Type C				Type D				Type E			
Width	Height	6 bolts + 1		8 bolts		6 bolts + 1		8 bolts		6 bolts + 1		8 bolts		6 bolts + 1		8 bolts		6 bolts + 1		8 bolts	
		Pos (+)	Neg (-)	Pos (+)	Neg (-)	Pos (+)	Neg (-)	Pos (+)	Neg (-)	Pos (+)	Neg (-)	Pos (+)	Neg (-)	Pos (+)	Neg (-)	Pos (+)	Neg (-)	Pos (+)	Neg (-)	Pos (+)	Neg (-)
36	96	210.0	210.0	180.0	180.0	210.0	210.0	180.0	180.0	186.4	186.4	180.0	180.0	210.0	210.0	180.0	180.0	210.0	210.0	180.0	180.0
42	96	210.0	210.0	180.0	180.0	194.1	194.1	180.0	180.0	159.8	159.8	180.0	180.0	210.0	210.0	180.0	180.0	194.1	194.1	180.0	180.0
48	96	210.0	210.0	180.0	180.0	169.9	169.9	180.0	180.0	139.8	139.8	180.0	180.0	210.0	210.0	180.0	180.0	169.9	169.9	180.0	180.0
* 54	96	200.8	200.8	180.0	180.0	151.0	151.0	180.0	180.0	124.3	124.3	165.7	165.7	210.0	210.0	180.0	180.0	151.0	151.0	180.0	180.0
* 60	96	180.7	180.7	180.0	180.0	135.9	135.9	180.0	180.0	111.9	111.9	149.2	149.2	210.0	210.0	180.0	180.0	135.9	135.9	180.0	180.0
36	102	210.0	210.0	180.0	180.0	210.0	210.0	180.0	180.0	175.5	175.5	180.0	180.0	210.0	210.0	180.0	180.0	210.0	210.0	180.0	180.0
42	102	210.0	210.0	180.0	180.0	182.7	182.7	180.0	180.0	150.4	150.4	180.0	180.0	210.0	210.0	180.0	180.0	182.7	182.7	180.0	180.0
48	102	210.0	210.0	180.0	180.0	159.9	159.9	180.0	180.0	131.6	131.6	175.5	175.5	210.0	210.0	180.0	180.0	159.9	159.9	180.0	180.0
* 54	102	189.0	189.0	180.0	180.0	142.1	142.1	180.0	180.0	117.0	117.0	156.0	156.0	210.0	210.0	180.0	180.0	142.1	142.1	180.0	180.0
* 60	102	170.1	170.1	180.0	180.0	127.9	127.9	170.5	170.5	105.3	105.3	140.4	140.4	207.7	207.7	180.0	180.0	127.9	127.9	170.5	170.5
36	108	210.0	210.0	180.0	180.0	201.3	201.3	180.0	180.0	165.7	165.7	180.0	180.0	210.0	210.0	180.0	180.0	201.3	201.3	180.0	180.0
42	108	210.0	210.0	180.0	180.0	172.6	172.6	180.0	180.0	142.1	142.1	180.0	180.0	210.0	210.0	180.0	180.0	172.6	172.6	180.0	180.0
48	108	200.8	200.8	180.0	180.0	151.0	151.0	180.0	180.0	124.3	124.3	165.7	165.7	210.0	210.0	180.0	180.0	151.0	151.0	180.0	180.0
* 54	108	178.5	178.5	180.0	180.0	134.2	134.2	179.0	179.0	110.5	110.5	147.3	147.3	210.0	210.0	180.0	180.0	134.2	134.2	179.0	179.0
* 60	108	160.7	160.7	180.0	180.0	120.8	120.8	161.1	161.1	99.4	99.4	132.6	132.6	196.1	196.1	180.0	180.0	120.8	120.8	161.1	161.1
36	114	210.0	210.0	180.0	180.0	190.7	190.7	180.0	180.0	157.0	157.0	180.0	180.0	210.0	210.0	180.0	180.0	190.7	190.7	180.0	180.0
42	114	210.0	210.0	180.0	180.0	163.5	163.5	180.0	180.0	134.6	134.6	179.4	179.4	210.0	210.0	180.0	180.0	163.5	163.5	180.0	180.0
48	114	190.2	190.2	180.0	180.0	143.1	143.1	180.0	180.0	117.8	117.8	157.0	157.0	210.0	210.0	180.0	180.0	143.1	143.1	180.0	180.0
* 54	114	169.1	169.1	180.0	180.0	127.2	127.2	169.5	169.5	104.7	104.7	139.6	139.6	206.5	206.5	180.0	180.0	127.2	127.2	169.5	169.5
* 60	114	152.2	152.2	180.0	180.0	114.4	114.4	152.6	152.6	94.2	94.2	125.6	125.6	185.8	185.8	180.0	180.0	114.4	114.4	152.6	152.6
36	120	210.0	210.0	180.0	180.0	181.2	181.2	180.0	180.0	149.2	149.2	180.0	180.0	210.0	210.0	180.0	180.0	181.2	181.2	180.0	180.0
42	120	206.6	206.6	180.0	180.0	155.3	155.3	180.0	180.0	127.8	127.8	170.5	170.5	210.0	210.0	180.0	180.0	155.3	155.3	180.0	180.0
48	120	180.7	180.7	180.0	180.0	135.9	135.9	180.0	180.0	111.9	111.9	149.2	149.2	210.0	210.0	180.0	180.0	135.9	135.9	180.0	180.0
* 54	120	160.7	160.7	180.0	180.0	120.8	120.8	161.1	161.1	99.4	99.4	132.6	132.6	196.1	196.1	180.0	180.0	120.8	120.8	161.1	161.1
* 60	120	144.6	144.6	180.0	180.0	108.7	108.7	145.0	145.0	89.5	89.5	119.3	119.3	176.5	176.5	180.0	180.0	108.7	108.7	145.0	145.0
36	126	210.0	210.0	180.0	180.0	172.6	172.6	180.0	180.0	142.1	142.1	180.0	180.0	210.0	210.0	180.0	180.0	172.6	172.6	180.0	180.0
42	126	196.7	196.7	180.0	180.0	147.9	147.9	180.0	180.0	121.8	121.8	162.3	162.3	210.0	210.0	180.0	180.0	147.9	147.9	180.0	180.0
48	126	172.1	172.1	180.0	180.0	129.4	129.4	172.6	172.6	106.5	106.5	142.1	142.1	210.0	210.0	180.0	180.0	129.4	129.4	172.6	172.6
* 54	126	153.0	153.0	180.0	180.0	115.0	115.0	153.4	153.4	94.7	94.7	126.3	126.3	186.8	186.8	180.0	180.0	115.0	115.0	153.4	153.4
* 60	126	137.7	137.7	180.0	180.0	103.5	103.5	138.1	138.1	85.2	85.2	113.6	113.6	168.1	168.1	180.0	180.0	103.5	103.5	138.1	138.1
36	132	210.0	210.0	180.0	180.0	164.7	164.7	180.0	180.0	135.6	135.6	180.0	180.0	210.0	210.0	180.0	180.0	164.7	164.7	180.0	180.0
42	132	187.8	187.8	180.0	180.0	141.2	141.2	180.0	180.0	116.2	116.2	155.0	155.0	210.0	210.0	180.0	180.0	141.2	141.2	180.0	180.0
48	132	164.3	164.3	180.0	180.0	123.5	123.5	164.7	164.7	101.7	101.7	135.6	135.6	200.6	200.6	180.0	180.0	123.5	123.5	164.7	164.7
* 54	132	146.0	146.0	180.0	180.0	109.8	109.8	146.4	146.4	90.4	90.4	120.5	120.5	178.3	178.3	180.0	180.0	109.8	109.8	146.4	146.4
36	138	209.5	209.5	180.0	180.0	157.6	157.6	180.0	180.0	129.7	129.7	172.9	172.9	210.0	210.0	180.0	180.0	157.6	157.6	180.0	180.0
42	138	179.6	179.6	180.0	180.0	135.1	135.1	180.0	180.0	111.2	111.2	148.2	148.2	210.0	210.0	180.0	180.0	135.1	135.1	180.0	180.0
48	138	157.2	157.2	180.0	180.0	118.2	118.2	157.6	157.6	97.3	97.3	129.7	129.7	191.9	191.9	180.0	180.0	118.2	118.2	157.6	157.6
36	144	200.8	200.8	180.0	180.0	151.0	151.0	180.0	180.0	124.3	124.3	165.7	165.7	210.0	210.0	180.0	180.0	151.0	151.0	180.0	180.0
42	144	172.1	172.1	180.0	180.0	129.4	129.4	172.6	172.6	106.5	106.5	142.1	142.1	210.0	210.0	180.0	180.0	129.4	129.4	172.6	172.6
48	144	150.6	150.6	180.0	180.0	113.3	113.3	151.0	151.0	93.2	93.2	124.3	124.3	183.9	183.9	180.0	180.0	113.3	113.3	151.0	151.0
36	145.5	198.7	198.7	180.0	180.0	149.4	149.4	180.0	180.0	123.0	123.0	164.0	164.0	210.0	210.0	180.0	180.0	149.4	149.4	180.0	180.0
42	145.5	170.4	170.4	180.0	180.0	128.1	128.1	170.8	170.8	105.4	105.4	140.6	140.6	208.0	208.0	180.0	180.0	128.1	128.1	170.8	170.8
48	145.5	149.1	149.1	180.0	180.0	112.1	112.1	149.4	149.4	92.3	92.3	123.0	123.0	182.0	182.0	180.0	180.0	112.1	112.1	149.4	149.4

Approved as complying with the Florida Building Code
Date Sept. 11, 2014
NOA# 14064.15.07
Miami Dade Product Control
By Manuel Sierra

GLOBAL PERFORMANCE WINDOWS, INC
D.B.A. EPSYLON, USA

2115 S.W. 2ND STREET
POMPANO BEACH, FL 33069
PH: 954.942.3322
FAX: 954.942.3215
www.epsylon.ca

PROJECT NAME

ALUMINUM WINDOW WALL
SERIES WW4SG
SMALL MISSILE IMPACT

SHEET TITLE

ANCHOR CAPACITY CHARTS

SCALE: N.T.S.

PREPARED BY: FEEC	DRAWN BY: O.C.
ISSUE DATE: 4/04/14	REVIEWED BY: M.M.

DRAWING REVISION LOG

No.	Date:	Revision:
1	7/26/2014	PER MDC COMMENTS
2	9/3/2014	PER MDC COMMENTS

ENGINEER:

FACADE AND ENVELOPE
ENGINEERING CONSULTANTS, LLC
CA# 30168
8950 SW 74th Court
22nd Floor Suite A-31
Miami, FL 33156 | (786) 592-0181

MANUEL MORALES LICENSE No. 71643 STATE OF FLORIDA PROFESSIONAL ENGINEER

SIGNED AND SEALED DRAWINGS CHECKED FOR STRUCTURAL COMPLIANCE ONLY BY:
FACADE AND ENVELOPE ENGINEERING CONSULTANTS, LLC

9/03/14

MANUEL MORALES, P.E.
FL. REG. # 71643

DWG No.
EUSA MDC-004
SHEET 9 OF 19

WEEP HOLES:
- TWO (2) 1/2" X 1/4" WEEP HOLES AT PRESSURE PLATE COVERS AT 6" FROM ENDS.
- THREE (3) 13/16" X 1/4" WEEP HOLES AT PRESSURE PLATE AT 4 1/2" FROM ENDS AND AT MIDSPAN.

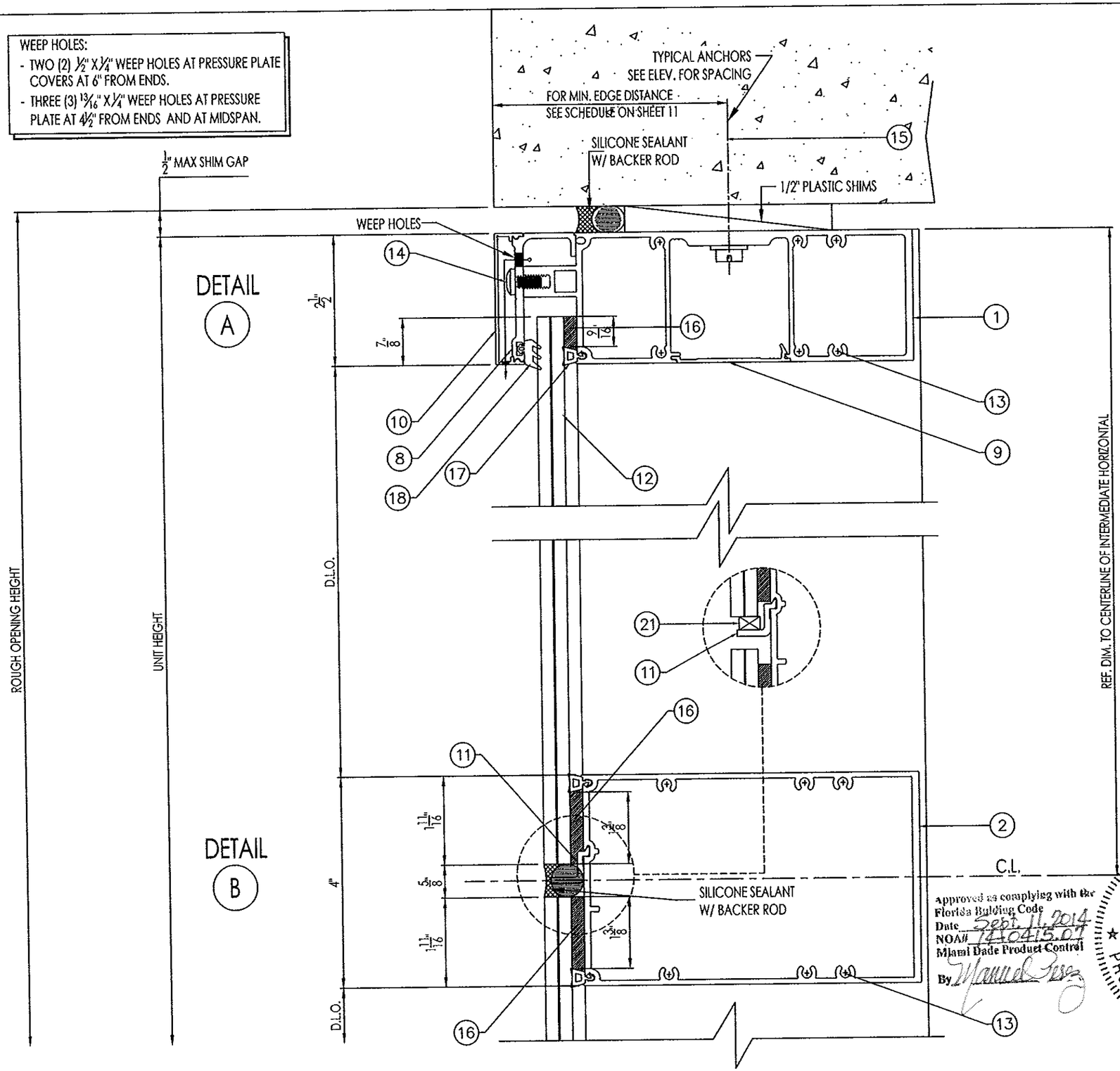

Approved as complying with the Florida Building Code
Date Sept. 11, 2014
NOA# 14040415.04
Miami Dade Product Control
By Manuel Morales

MANUEL MORALES
LICENSE
No 71643
STATE OF FLORIDA
PROFESSIONAL ENGINEER

9/03/14

MANUEL MORALES, P.E.
FL. REG. # 71643

GLOBAL PERFORMANCE WINDOWS, INC
D.B.A. EPSYLON, USA

2115 S.W. 2ND STREET
POMPANO BEACH, FL 33069
PH: 954.942.3322
FAX: 954.942.3215
www.epsylon.ca

PROJECT NAME
ALUMINUM WINDOW WALL
SERIES WW4SG
SMALL MISSILE IMPACT

SHEET TITLE
TYPICAL DETAILS

SCALE: 6" = 1'-0"

PREPARED BY: FEEC	DRAWN BY: O.C.
ISSUE DATE: 4/04/14	REVIEWED BY: M.M.

DRAWING REVISION LOG

No.	Date:	Revision:
1	7/26/2014	PER MDC COMMENTS
2	9/3/2014	PER MDC COMMENTS

ENGINEER:
FACADE AND ENVELOPE
ENGINEERING CONSULTANTS, LLC
CA# 30168
8950 SW 74th Court
22nd Floor Suite A-31
Miami, FL 33156 | (786) 592-0181

SIGNED AND SEALED DRAWINGS CHECKED FOR STRUCTURAL COMPLIANCE ONLY BY:
FACADE AND ENVELOPE ENGINEERING CONSULTANTS, LLC

DWG No.
EUSA MDC-004
SHEET 10 OF 19

WEEP HOLES:
- TWO (2) ½" X ¼" WEEP HOLES AT PRESSURE PLATE COVERS AT 6" FROM ENDS.
- THREE (3) 13/16" X ¼" WEEP HOLES AT PRESSURE PLATE AT 4½" FROM ENDS AND AT MIDSPAN.

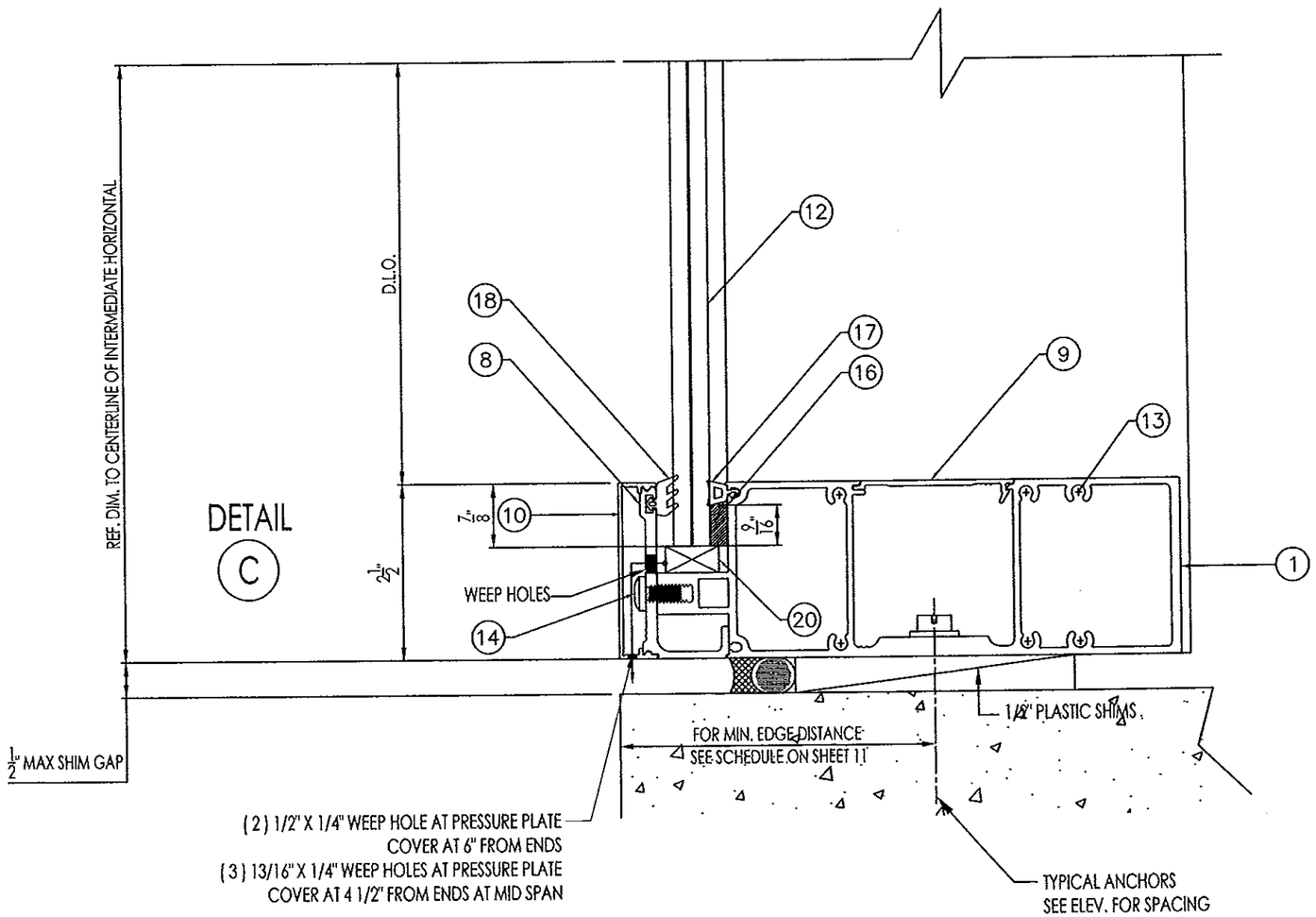

TYPICAL ANCHOR TYPES:

A: 3/8" DIA. POWERS WEDGEBOLT WITH 3" EMBEDMENT, 4 1/2" MINIMUM SPACING AND 4 1/2" EDGE DISTANCE INTO 3000 PSI MIN CONCRETE

B: 3/8" DIA. POWERS WEDGEBOLT THROUGH UP TO 2X WOOD BUCK WITH 3" EMBEDMENT, 4 1/2" MINIMUM SPACING AND 4 1/2" EDGE DISTANCE INTO 3000 PSI MIN CONCRETE

C: 3/8" DIA. GRADE 5 MACHINE SCREW INTO METAL STRUCTURE (STEEL (FY = 36 KSI) OR ALUMINUM (FY = 25 KSI) MINIMUM 1/8" THICK)

D: 1/2" DIA. GRADE 5 MACHINE SCREW INTO METAL STRUCTURE (STEEL (FY = 36 KSI) OR ALUMINUM (FY = 25 KSI) MINIMUM 1/8" THICK)

E: 3/8" DIA. GRADE 5 LAG BOLT WITH 3" EMBEDMENT INTO WOOD STRUCTURE AND 2" MIN EDGE DISTANCE

ADDITIONAL SEALANT:

SILICONE SEALANT AT ALL FRAME CORNERS.

Approved as complying with the Florida Building Code
Date Sept. 11, 2014
NOA# 14-0415.07
Miami Dade Product Control
By Manuel Seres

MANUEL MORALES LICENSE No 71643 STATE OF FLORIDA PROFESSIONAL ENGINEER

9/03/14

GLOBAL PERFORMANCE WINDOWS, INC
D.B.A. EPSYLON, USA

2115 S.W. 2ND STREET
POMPANO BEACH, FL 33069
PH: 954.942.3322
FAX: 954.942.3215
www.epsylon.ca

PROJECT NAME

ALUMINUM WINDOW WALL SERIES WW4SG SMALL MISSILE IMPACT

SHEET TITLE

TYPICAL DETAILS

SCALE: 6"=1'-0"

PREPARED BY: FEEC	DRAWN BY: O.C.
ISSUE DATE: 4/04/14	REVIEWED BY: M.M.

DRAWING REVISION LOG

No.	Date:	Revision:
1	7/26/2014	PER MDC COMMENTS
2	9/3/2014	PER MDC COMMENTS

ENGINEER:

FACADE AND ENVELOPE ENGINEERING CONSULTANTS, LLC
CA# 30168
8950 SW 74th Court
22nd Floor Suite A-31
Miami, FL 33156 | (786) 592-0181

SIGNED AND SEALED DRAWINGS CHECKED FOR STRUCTURAL COMPLIANCE ONLY BY:
FACADE AND ENVELOPE ENGINEERING CONSULTANTS, LLC

MANUEL MORALES, P.E.
FL. REG. # 71643

DWG No.
EUSA MDC-004
SHEET 11 OF 19

METAL STRUCTURES NOT BY EPSYLON, USA MUST SUPPORT THE LOADS IMPOSED BY THE GLAZING SYSTEM AND TRANSFER THEM TO THE SUPPORTING STRUCTURE.

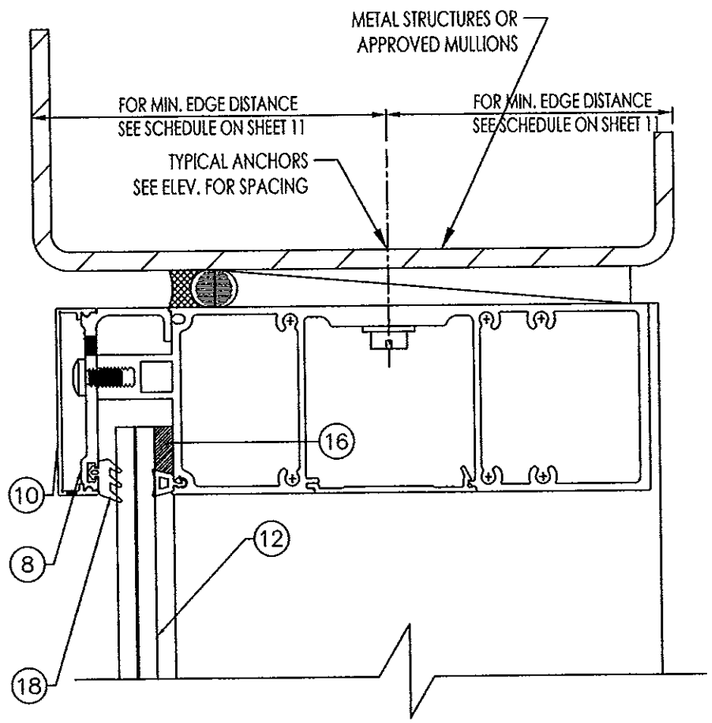

DETAIL
(A.1) (HEAD ALTERNATE)

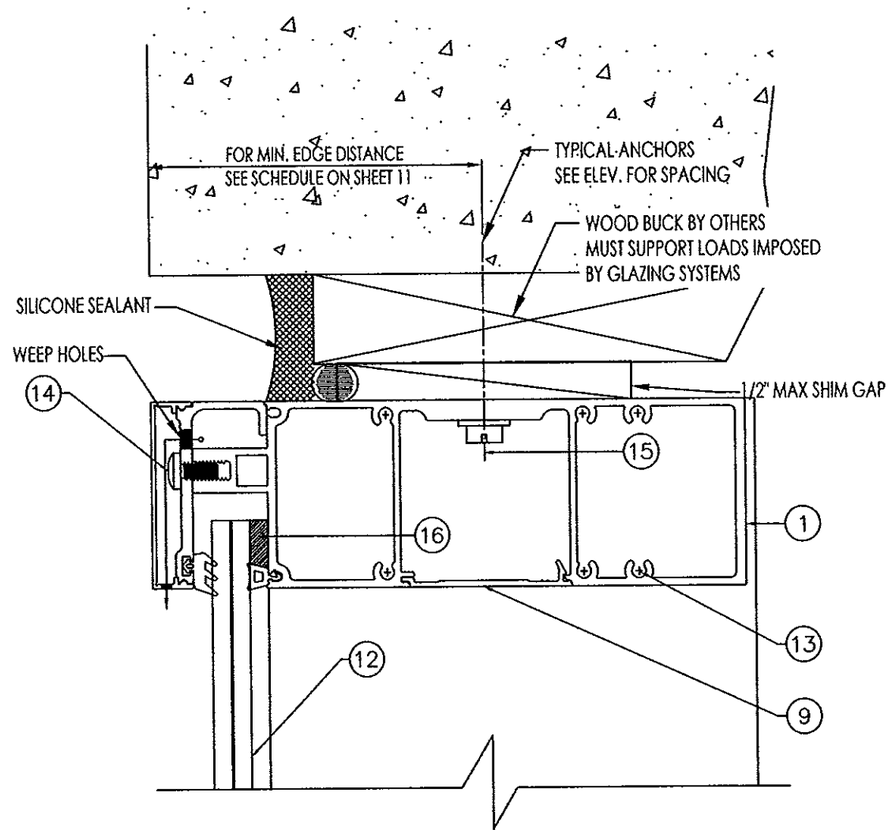

DETAIL
(A.2) (HEAD ALTERNATE)

Approved as complying with the Florida Building Code
Date Sept. 11, 2014
NOA# 14-0415.07
Miami Dade Product Control
By Manuel Berro

MANUEL MORALES
LICENSE
No 71643
STATE OF
FLORIDA
PROFESSIONAL ENGINEER

9/03/14

GLOBAL PERFORMANCE WINDOWS, INC
D.B.A. EPSYLON, USA

2115 S.W. 2ND STREET
POMPANO BEACH, FL 33069
PH: 954.942.3322
FAX: 954.942.3215
www.epsylon.ca

PROJECT NAME

ALUMINUM WINDOW WALL
SERIES WW4SG
SMALL MISSILE IMPACT

SHEET TITLE

TYPICAL DETAILS

SCALE: 6" = 1'-0"

PREPARED BY: FEEC	DRAWN BY: O.C.
ISSUE DATE: 4/04/14	REVIEWED BY: M.M.

DRAWING REVISION LOG

No.	Date:	Revision:
1	7/26/2014	PER MDC COMMENTS
2	9/3/2014	PER MDC COMMENTS

ENGINEER:

FACADE AND ENVELOPE
ENGINEERING CONSULTANTS, LLC
CA# 30168
8950 SW 74th Court
22nd Floor Suite A-31
Miami, FL 33156 | (786) 592-0181

SIGNED AND SEALED DRAWINGS CHECKED FOR STRUCTURAL COMPLIANCE ONLY BY:

FACADE AND ENVELOPE
ENGINEERING CONSULTANTS, LLC

MANUEL MORALES, P.E.
FL. REG. # 71643

DWG No.
EUSA MDC-004
SHEET 12 OF 19

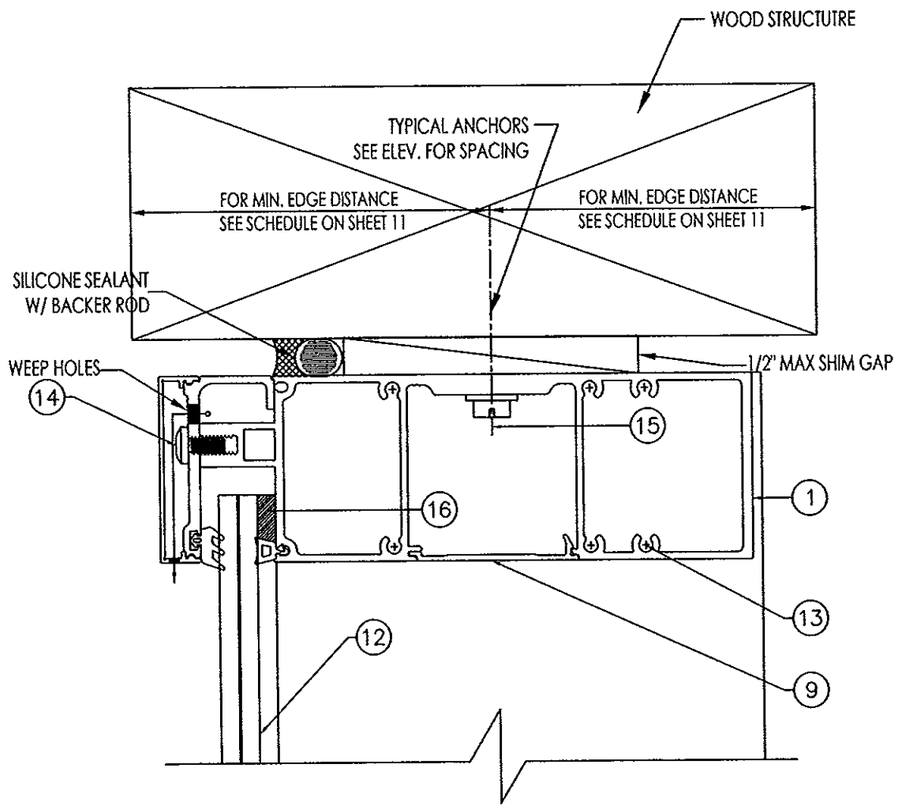

DETAIL
A.3 (HEAD ALTERNATE)

Approved as complying with the Florida Building Code
Date Sept. 11, 2014
NOA# 14-0415.07
Miami Dade Product Control
By Manuel Perez

MANUEL MORALES
LICENSE
No 71643
STATE OF
FLORIDA
PROFESSIONAL ENGINEER

GLOBAL PERFORMANCE WINDOWS, INC
D.B.A. EPSYLON, USA

2115 S.W. 2ND STREET
POMPANO BEACH, FL 33069
PH: 954.942.3322
FAX: 954.942.3215
www.epsylon.ca

PROJECT NAME

ALUMINUM WINDOW WALL
SERIES WW4SG
SMALL MISSILE IMPACT

SHEET TITLE

TYPICAL DETAILS

SCALE: 6"=1'-0"

PREPARED BY: FEEC	DRAWN BY: O.C.
ISSUE DATE: 4/04/14	REVIEWED BY: M.M.

DRAWING REVISION LOG

No.	Date:	Revision:
1	7/26/2014	PER MDC COMMENTS
2	9/3/2014	PER MDC COMMENTS

ENGINEER:

FACADE AND ENVELOPE
ENGINEERING CONSULTANTS, LLC
CA# 30168
8950 SW 74th Court
22nd Floor Suite A-31
Miami, FL 33156 | (786) 592-0181

SIGNED AND SEALED DRAWINGS CHECKED FOR STRUCTURAL COMPLIANCE ONLY BY:

FACADE AND ENVELOPE
ENGINEERING CONSULTANTS, LLC

9/03/14

MANUEL MORALES, P.E.
FL. REG. # 71643

DWG No.
EUSA MDC-004
SHEET 13 OF 19

MINIMUM PERIMETER SEALANT JOINT WIDTH SHALL BE ¼". ACI 117-10 AND AISC 303-05 RECOMMEND A MAXIMUM VARIATION FROM THE PLUM OF 1" FOR A 10' SPAN.

JOINT WIDTHS WIDER THAN 1" SHALL BE REVIEWED BY DELEGATED ENGINEER OR ARCHITECT OF RECORD.

REFER TO PERIMETER SEALANT MANUFACTURER'S PUBLISHED LITERATURE FOR INSTALLATION INSTRUCTIONS INCLUDING SURFACE PREPARATION, COMPATIBILITY AND WARRANTY REQUIREMENTS.

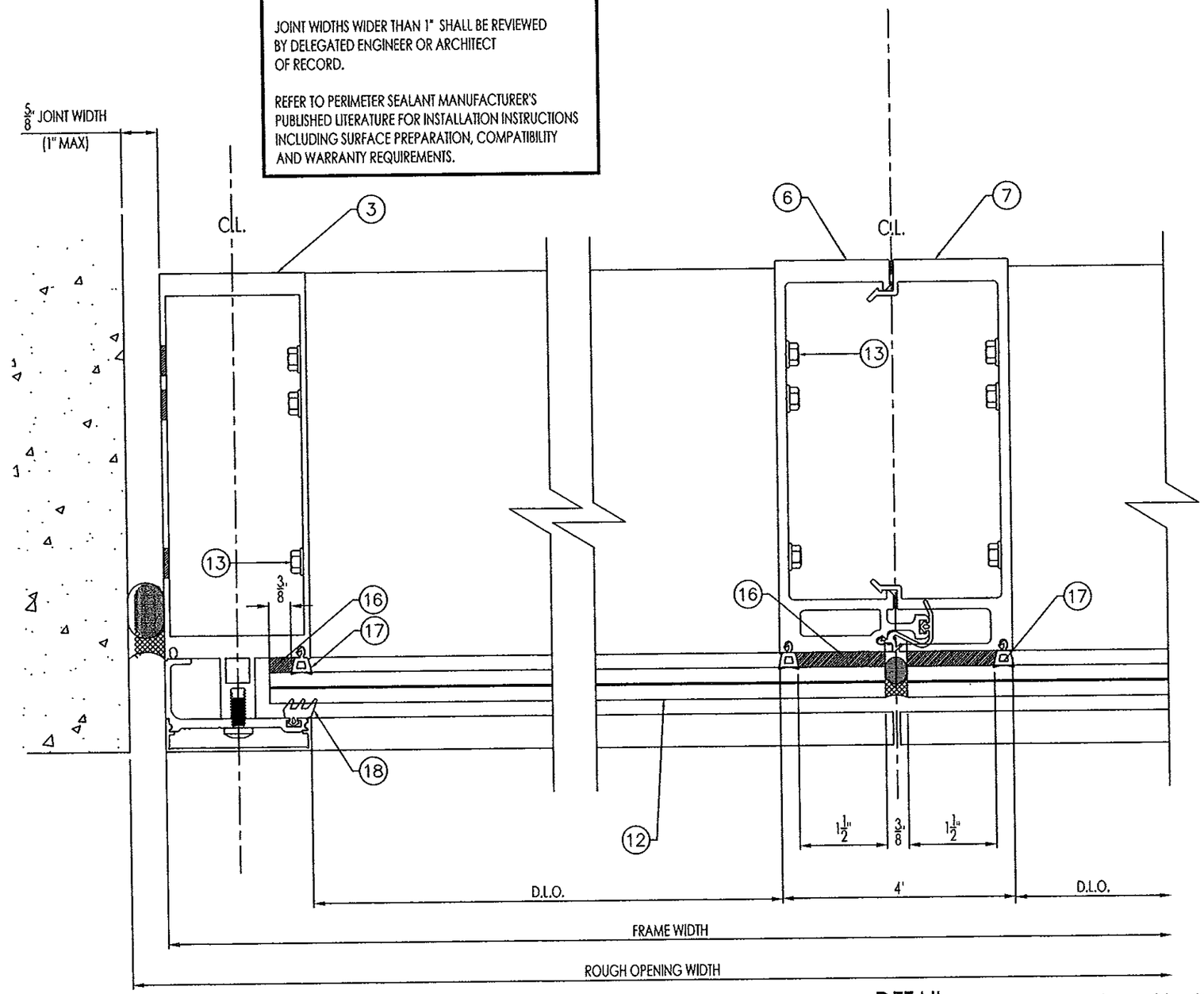

DETAIL D

DETAIL E

Approved as complying with the Florida Building Code
Date Sept. 11, 2014
NOA# 14-0415.07
Miami Dade Product Control
By Manuel Perez

MANUEL MORALES
LICENSE
No 71643
STATE OF FLORIDA
PROFESSIONAL ENGINEER

9/03/14

MANUEL MORALES, P.E.
FL. REG. # 71643

GLOBAL PERFORMANCE WINDOWS, INC

D.B.A. EPSYLON, USA

2115 S.W. 2ND STREET
POMPANO BEACH, FL 33069
PH: 954.942.3322
FAX: 954.942.3215
www.epsylon.ca

PROJECT NAME

ALUMINUM WINDOW WALL
SERIES WW4SG
SMALL MISSILE IMPACT

SHEET TITLE

TYPICAL DETAILS

SCALE: 6"=1'-0"

PREPARED BY: FEEC	DRAWN BY: O.C.
ISSUE DATE: 4/04/14	REVIEWED BY: M.M.

DRAWING REVISION LOG

No.	Date:	Revision:
1	7/26/2014	PER MDC COMMENTS
2	9/3/2014	PER MDC COMMENTS

ENGINEER:

FACADE AND ENVELOPE
ENGINEERING CONSULTANTS, LLC
CA# 30168
8950 SW 74th Court
22nd Floor Suite A-31
Miami, FL 33156 | (786) 592-0181

SIGNED AND SEALED DRAWINGS CHECKED FOR STRUCTURAL COMPLIANCE ONLY BY:

FACADE AND ENVELOPE ENGINEERING CONSULTANTS, LLC

DWG No.

EUSA MDC-004

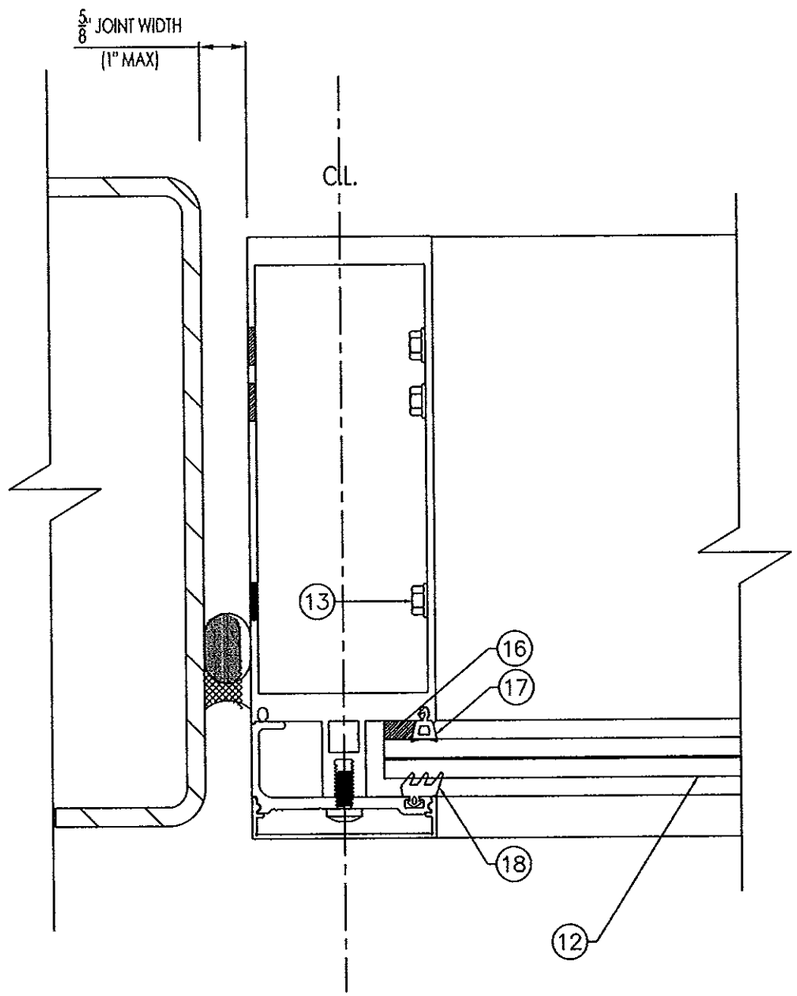

DETAIL
F

MINIMUM PERIMETER SEALANT JOINT WIDTH SHALL BE ¼". ACI 117-10 AND AISC 303-05 RECOMMEND A MAXIMUM VARIATION FROM THE PLUM OF 1" FOR A 10' SPAN.

JOINT WIDTHS WIDER THAN 1" SHALL BE REVIEWED BY DELEGATED ENGINEER OR ARCHITECT OF RECORD.

REFER TO PERIMETER SEALANT MANUFACTURER'S PUBLISHED LITERATURE FOR INSTALLATION INSTRUCTIONS INCLUDING SURFACE PREPARATION, COMPATIBILITY AND WARRANTY REQUIREMENTS.

Approved as complying with the Florida Building Code
Date Sept. 11, 2014
NOA# 14-0415.07
Miami Dade Product Control
By Manuel Perez

MANUEL MORALES
LICENSE
No 71643
STATE OF FLORIDA
PROFESSIONAL ENGINEER

9/03/14

GLOBAL PERFORMANCE WINDOWS, INC
D.B.A. EPSYLON, USA

2115 S.W. 2ND STREET
POMPANO BEACH, FL 33069
PH: 954.942.3322
FAX: 954.942.3215
www.epsylon.ca

PROJECT NAME

ALUMINUM WINDOW WALL
SERIES WW4SG
SMALL MISSILE IMPACT

SHEET TITLE

TYPICAL DETAILS

SCALE: 4" = 1'-0"

PREPARED BY: FEEC	DRAWN BY: O.C.
ISSUE DATE: 4/04/14	REVIEWED BY: M.M.

DRAWING REVISION LOG

No.	Date:	Revision:
1	7/26/2014	PER MDC COMMENTS
2	9/3/2014	PER MDC COMMENTS

ENGINEER:

FACADE AND ENVELOPE
ENGINEERING CONSULTANTS, LLC
CA# 30168
8950 SW 74th Court
22nd Floor Suite A-31
Miami, FL 33156 | (786) 592-0181

SIGNED AND SEALED DRAWINGS CHECKED FOR STRUCTURAL COMPLIANCE ONLY BY:

FACADE AND ENVELOPE
ENGINEERING CONSULTANTS, LLC

MANUEL MORALES, P.E.
FL. REG. # 71643

DWG No.
EUSA MDC-004
SHEET 15 OF 19

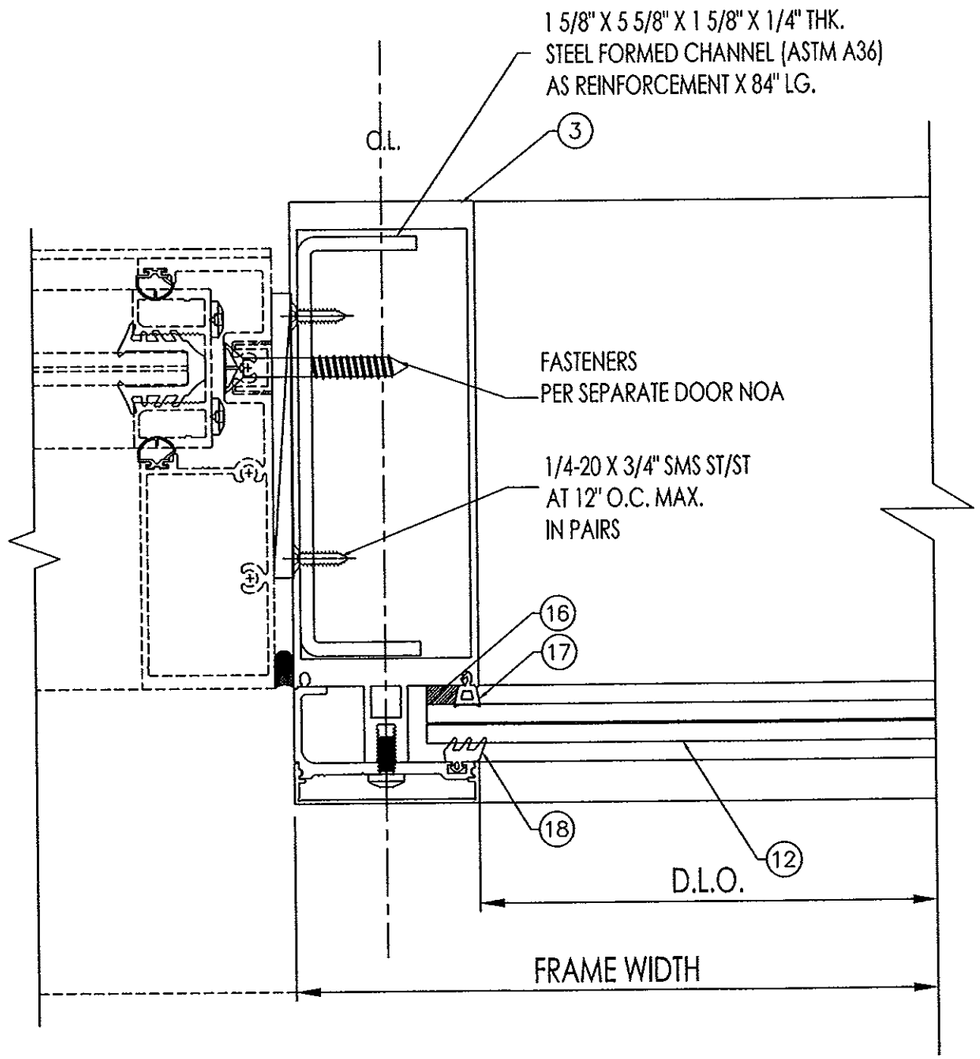

DETAIL
G

SEE SEPARATE NOA FOR DESIGNLOAD CAPACITIES ON SLIDING GLASS DOOR OR SWING DOOR.
MINIMUM CAPACITY OF BOTH SYSTEMS WILL CONTROL ALLOWABLE PRESSURE FOR ENTIRE OPENING

Approved as complying with the Florida Building Code
Date Sept. 11 2014
NOA# 14-0415.01
Miami Dade Product Control
By Manuel Perez

MANUEL MORALES
LICENSE
No 71643
STATE OF FLORIDA
PROFESSIONAL ENGINEER

GLOBAL PERFORMANCE WINDOWS, INC
D.B.A. EPSYLON, USA

2115 S.W. 2ND STREET
POMPANO BEACH, FL 33069
PH: 954.942.3322
FAX: 954.942.3215
www.epsylon.ca

PROJECT NAME
ALUMINUM WINDOW WALL
SERIES WW4SG
SMALL MISSILE IMPACT

SHEET TITLE
TYPICAL DETAILS

SCALE: 6"=1'-0"

PREPARED BY: FEEC	DRAWN BY: O.C.
ISSUE DATE: 4/04/14	REVIEWED BY: M.M.

DRAWING REVISION LOG

No.	Date:	Revision:
1	7/26/2014	PER MDC COMMENTS
2	9/3/2014	PER MDC COMMENTS

ENGINEER:
FACADE AND ENVELOPE
ENGINEERING CONSULTANTS, LLC
CA# 30168
8950 SW 74th Court
22nd Floor Suite A-31
Miami, FL 33156 | (786) 592-0181

SIGNED AND SEALED DRAWINGS CHECKED FOR STRUCTURAL COMPLIANCE ONLY BY:
FACADE AND ENVELOPE ENGINEERING CONSULTANTS, LLC

9/03/14

MANUEL MORALES, P.E.
FL. REG. # 71643

DWG No.
EUSA MDC-004
SHEET 16 OF 19

ALUMINUM EXTRUSION DIMENSIONS

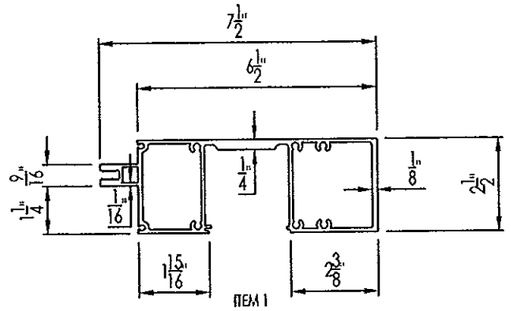

ITEM 1 PART # 60061
HEAD AND SILL
ALUMINUM 6063-T6

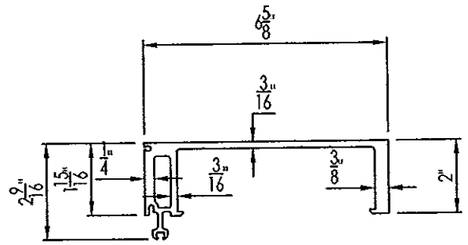

ITEM 6 PART # 60086
FEMALE MULLION (4" MULLION)
ALUMINUM 6063-T6

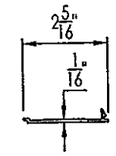

ITEM 9 PART # 64005
SNAP COVER (FOR ANCHOR)
ALUMINUM 6063-T6

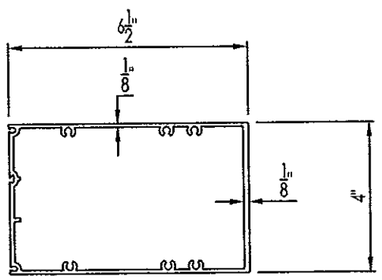

ITEM 2 PART # 60079
INTERMEDIATE HORIZONTAL
ALUMINUM 6063-T6

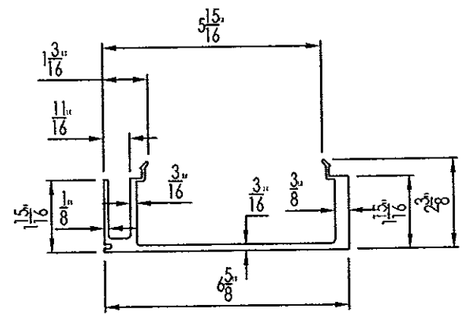

ITEM 7 PART # 60087
MALE MULLION (4" MULLION)
ALUMINUM 6063-T6

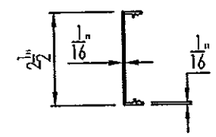

ITEM 10 PART # 54023
COVER
ALUMINUM 6063-T6

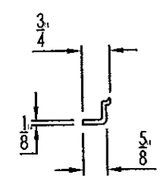

ITEM 11 PART # 11012
GLASS SUPPORT ADAPTER
ALUMINUM 6063-T6

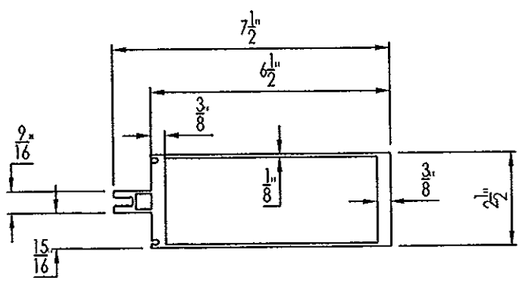

ITEM 3 PART # 50017
JAMB
ALUMINUM 6063-T6

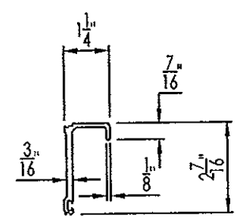

ITEM 8 PART # 53011
PRESSURE PLATE
ALUMINUM 6063-T6

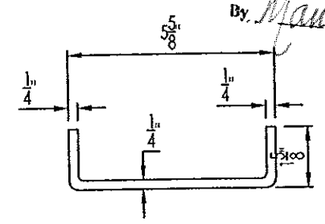

JAMB REINFORCING AT DOOR
STEEL FORMED CHANNEL
ASTM A36

Approved as complying with the Florida Building Code
Date Sept. 11, 2014
NOA# 14-0415.07
Miami Dade Product Control
By. Manuel Perez

MANUEL MORALES
LICENSE
No 71643
STATE OF FLORIDA
PROFESSIONAL ENGINEER

9/03/14

MANUEL MORALES, P.E.
FL. REG. # 71643

GLOBAL PERFORMANCE WINDOWS, INC
D.B.A. EPSYLON, USA

2115 S.W. 2ND STREET
POMPANO BEACH, FL 33069
PH: 954.942.3322
FAX: 954.942.3215
www.epsylon.ca

PROJECT NAME
ALUMINUM WINDOW WALL
SERIES WW4SG
SMALL MISSILE IMPACT

SHEET TITLE
ALUMINUM EXTRUSION DIMENSIONS

SCALE: 3" = 1'-0"

PREPARED BY: FEEC	DRAWN BY: O.C.
ISSUE DATE: 4/04/14	REVIEWED BY: M.M.

DRAWING REVISION LOG

No.	Date:	Revision:
1	7/26/2014	PER MDC COMMENTS
2	9/3/2014	PER MDC COMMENTS

ENGINEER:
FACADE AND ENVELOPE
ENGINEERING CONSULTANTS, LLC
CA# 30168
8950 SW 74th Court
22nd Floor Suite A-31
Miami, FL 33156 | (786) 592-0181

SIGNED AND SEALED DRAWINGS CHECKED FOR STRUCTURAL COMPLIANCE ONLY BY:
FACADE AND ENVELOPE ENGINEERING CONSULTANTS, LLC

DWG No.
EUSA MDC-004
SHEET 17 OF 19

BILL OF MATERIALS

ITEM	PART NUMBER, DESCRIPTION	MATERIAL	QUANTITY / SPACING
1	60061, WINDOW HEAD / SILL	6063-T6	AS REQUIRED
2	60079, INTERMEDIATE HORIZONTAL	6063-T6	AS REQUIRED
3	50017, WINDOW JAMB	6063-T6	AS REQUIRED
6	60086, 4" MULLION, FEMALE	6063-T6	AS REQUIRED
7	60087, 4" MULLION, MALE	6063-T6	AS REQUIRED
8	53011, PRESSURE PLATE	6063-T6	AS REQUIRED
9	64005, SNAP COVER	6063-T6	AS REQUIRED
10	54023, EXTERIOR COVER CAP	6063-T6	AS REQUIRED
11	11012, GLASS SUPPORT ADAPTER	6063-T6	4" LG. AT 1/4 POINTS
12	GT-2: SMALL MISSILE IMPACT GLASS (SEE DESCRIPTION ON PAGE 1 OF 12)	9/16 " LAMINATED GLASS	-
13	#14 X 1 1/2" LG.HH SMS	304 ST/ST	6 PER EACH HZTL MEMBER
14	1/4-20 X 9/16" LG. MS	304 ST/ST	AT COVER ADAPTER: 6" O.C.
15	TYPICAL ANCHORS	CARBON STEEL	SEE SHEET 8 FOR FASTENER TYPES
16	TREMCO PROGLAZE II OR GE SSG 4600, STRUCTURAL SILICONE.	-	AS REQUIRED
17	90006 TREMCO GLAZING SPACER	SILICONE	GLASS PERIMETER
18	90000 TREMCO GLAZING GASKET	EPDM DURO 70	GLASS PERIMETER
19	90103 TREMCO WEATHER STRIPPING GASKET	SILICONE	AT MULLIONS
20	3/8" X 3/4" X 4" LG. SETTING BLOCK	SILICONE	AT 1/4 POINTS
21	1/4" X 3/8" X 4" LG. SETTING BLOCK	SILICONE	AT EACH INT. GLASS SUPPORT
22	1 5/8 X 5 5/8" X 1 5/8 " X 1/4 " THK. STEEL FORMED CHANNEL		AT VERTICAL MULLIONS AS REQUIRED
23	# 14 X 3/4" LONG HH SMS		AT STEEL CHANNEL REINFORCING 8" O.C.

Approved as complying with the
Florida Building Code
Date Sept. 11, 2014
NOA# 14-0415.07
Miami Dade Product Control
By

GLOBAL PERFORMANCE WINDOWS, INC
D.B.A. EPSYLON, USA

2115 S.W. 2ND STREET
POMPANO BEACH, FL 33069
PH: 954.942.3322
FAX: 954.942.3215
www.epsylon.ca

PROJECT NAME

ALUMINUM WINDOW WALL
SERIES WW4SG
SMALL MISSILE IMPACT

SHEET TITLE

BILL OF MATERIALS

SCALE: N.T.S

PREPARED BY: FEEC	DRAWN BY: O.C.
ISSUE DATE: 4/04/14	REVIEWED BY: M.M.

DRAWING REVISION LOG

No.	Date:	Revision:
1	7/26/2014	PER MDC COMMENTS
2	9/3/2014	PER MDC COMMENTS

ENGINEER:

FACADE AND ENVELOPE
ENGINEERING CONSULTANTS, LLC
CA# 30168
8950 SW 74th Court
22nd Floor Suite A-31
Miami, FL 33156 | (786) 592-0181

MANUEL MORALES LICENSE No 71643 STATE OF FLORIDA PROFESSIONAL ENGINEER

SIGNED AND SEALED DRAWINGS CHECKED FOR STRUCTURAL COMPLIANCE ONLY BY:
FACADE AND ENVELOPE ENGINEERING CONSULTANTS, LLC

9/03/14

MANUEL MORALES, P.E.
FL. REG. # 71643

DWG No.
EUSA MDC-004
SHEET 18 OF 19

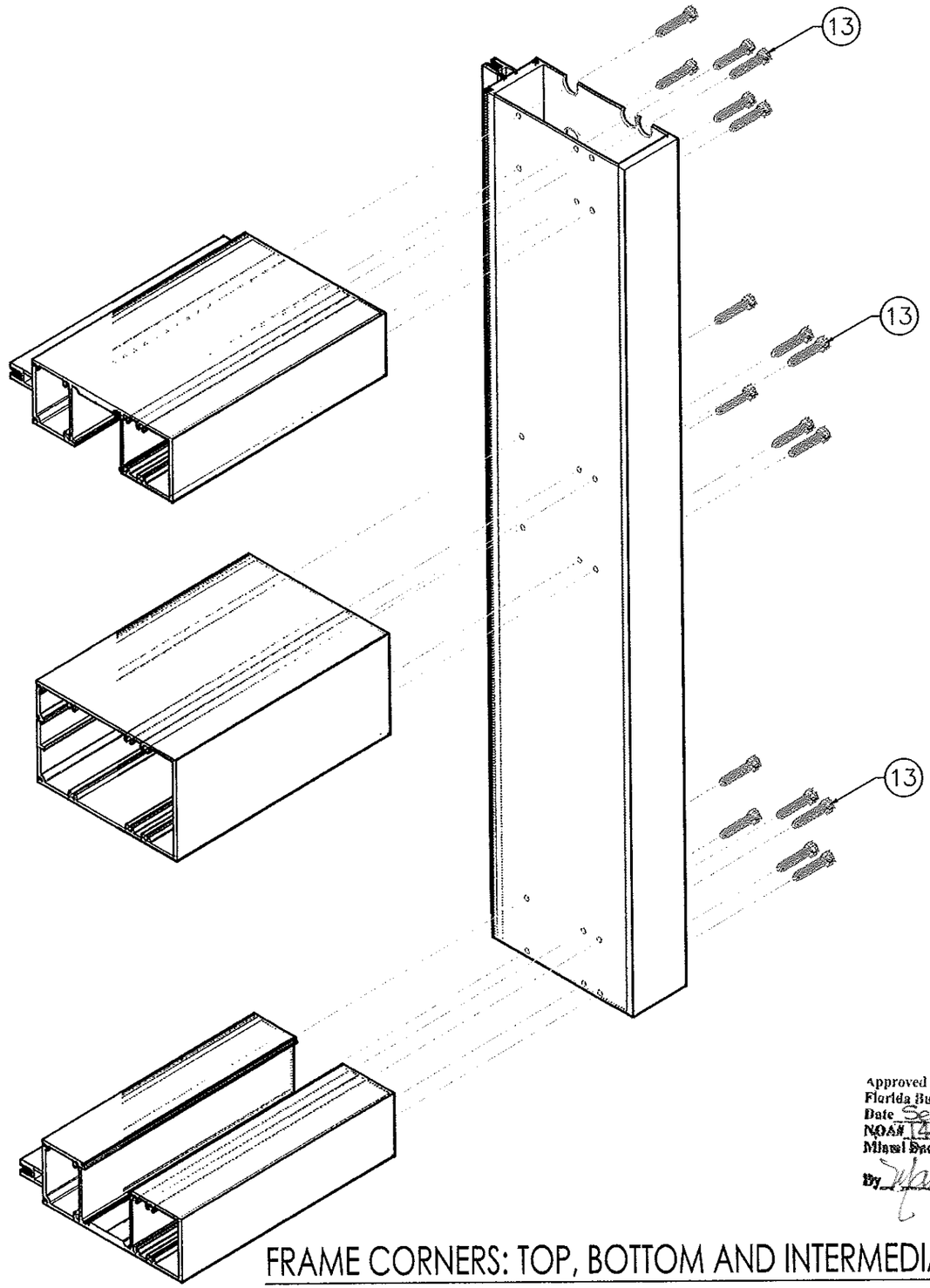

FRAME CORNERS: TOP, BOTTOM AND INTERMEDIATE

Approved as complying with the
Florida Building Code
Date Sept. 11, 2014
NOA# 14-0415.07
Miami Dade Product Control
By

MANUEL MORALES
LICENSE
No 71643
STATE OF FLORIDA
PROFESSIONAL ENGINEER

9/03/14

GLOBAL PERFORMANCE WINDOWS, INC
D.B.A. EPSYLON, USA

2115 S.W. 2ND STREET
POMPANO BEACH, FL 33069
PH: 954.942.3322
FAX: 954.942.3215
www.epsylon.ca

PROJECT NAME

ALUMINUM WINDOW WALL
SERIES WW4SG
SMALL MISSILE IMPACT

SHEET TITLE

ISOMETRIC DRAWING

SCALE: n.t.s.

PREPARED BY: FEEC	DRAWN BY: O.C.
ISSUE DATE: 4/04/14	REVIEWED BY: M.M.

DRAWING REVISION LOG

No.	Date:	Revision:
1	7/26/2014	PER MDC COMMENTS
2	9/3/2014	PER MDC COMMENTS

ENGINEER:

FACADE AND ENVELOPE
ENGINEERING CONSULTANTS, LLC
CA# 30168
8950 SW 74th Court
22nd Floor Suite A-31
Miami, FL 33156 | (786) 592-0181

SIGNED AND SEALED DRAWINGS CHECKED FOR STRUCTURAL COMPLIANCE ONLY BY:

FACADE AND ENVELOPE ENGINEERING CONSULTANTS, LLC

MANUEL MORALES, P.E.
FL. REG. # 71643

DWG No.

EUSA MDC-004