MIAMI-DADE COUNTY
DEPARTMENT OF REGULATORY AND ECONOMIC RESOURCES (RER)
BOARD AND CODE ADMINISTRATION DIVISION

MIAMI-DADE COUNTY
PRODUCT CONTROL SECTION
11805 SW 26 Street, Room 208
Miami, Florida 33175-2474
T (786) 315-2590 F (786) 315-2599
www.miamidade.gov/economy

NOTICE OF ACCEPTANCE (NOA)

Firestone Building Products Company, LLC
250 West 96 Street
Indianapolis, IN 46260

SCOPE:
This NOA is being issued under the applicable rules and regulations governing the use of construction materials. The documentation submitted has been reviewed and accepted by Miami-Dade County RER- Product Control Section to be used in Miami Dade County and other areas where allowed by the Authority Having Jurisdiction (AHJ).

This NOA shall not be valid after the expiration date stated below. The Miami-Dade County Product Control Section (In Miami Dade County) and/or the AHJ (in areas other than Miami Dade County) reserve the right to have this product or material tested for quality assurance purposes. If this product or material fails to perform in the accepted manner, the manufacturer will incur the expense of such testing and the AHJ may immediately revoke, modify, or suspend the use of such product or material within their jurisdiction. RER reserves the right to revoke this acceptance, if it is determined by Miami-Dade County Product Control Section that this product or material fails to meet the requirements of the applicable building code.

This product is approved as described herein, and has been designed to comply with the High Velocity Hurricane Zone of the Florida Building Code.

DESCRIPTION: " Series 3000 with 1.5" Returns " Aluminum Plate Wall Panel System

APPROVAL DOCUMENT: Drawings #NPD2007 titled " 0.125 Series 3000 Una-Fab Panel ", sheets 1 through 23 of 23, prepared by Firestone Building Products Company, LLC, dated June 10, 2014, signed and sealed by Robert Nieminen, P.E., on June 26, 2014, bearing the Miami-Dade County Product Control Revision stamp with the Notice of Acceptance number and the expiration date by the Miami-Dade County Product Control Section.

MISSILE IMPACT RATING: Large and Small Missile Impact Resistant

LABELING: Each panel shall bear a permanent label with the manufacturer's name or logo, Anoka, MN / Warren, MI / College Park, GA / Las Vegas, NV and the following statement: "Miami-Dade County Product Control Approved", unless otherwise noted herein.

RENEWAL of this NOA shall be considered after a renewal application has been filed and there has been no change in the applicable building code negatively affecting the performance of this product.

TERMINATION of this NOA will occur after the expiration date or if there has been a revision or change in the materials, use, and/or manufacture of the product or process. Misuse of this NOA as an endorsement of any product, for sales, advertising or any other purposes shall automatically terminate this NOA. Failure to comply with any section of this NOA shall be cause for termination and removal of NOA.

ADVERTISEMENT: The NOA number preceded by the words Miami-Dade County, Florida, and followed by the expiration date may be displayed in advertising literature. If any portion of the NOA is displayed, then it shall be done in its entirety.

INSPECTION: A copy of this entire NOA shall be provided to the user by the manufacturer or its distributors and shall be available for inspection at the job site at the request of the Building Official.

This **NOA revises & renews NOA #09-0127.03** and consists of this page 1, evidence submitted pages E-1 & E-2 as well as approval document mentioned above.
The submitted documentation was reviewed by **Helmy A. Makar, P.E., M.S.**

MIAMI-DADE COUNTY APPROVED

08/14/2014

NOA No. 14-0416.02
Expiration Date: 07/22/2019
Approval Date: 08/14/2014

Firestone Building Products Company, LLC

NOTICE OF ACCEPTANCE: EVIDENCE SUBMITTED

1. EVIDENCE SUBMITTED UNDER PREVIOUS APPROVAL # 09-0127.03

A. DRAWINGS

1. *Drawings #NPD2007 titled " 0.125 Aluminum Plate Panel ", sheets 1 through 23 of 23, prepared by Firestone Metal Products, dated November 07, 2008, signed and sealed by L. David Rice, P.E., on June 23, 2009.*

B. TESTS

1. *Test report on: 1) Large Missile Impact Test; 2) Static Air Pressure Test; 3) Cyclic Wind Pressure Test, prepared by Architectural Testing Inc., Test Report No. ATI-77173.01-201-18, dated 10/23/2008, signed and sealed by Joseph A. Reed, P.E.*

C. CALCULATIONS

1. *Calculations titled " Series 3000 Aluminum Panels ", dated November 12, 2008, 20 pages, prepared by Rice Engineering, signed and sealed by L. David Rice, P.E., on November 14, 2008.*

D. QUALITY ASSURANCE

1. *By Miami-Dade county Building Code Compliance Office.*

E. MATERIAL CERTIFICATIONS

1. *Tensile Test Report No. ATI-77173.01-201-18, dated 10/23/2008, signed and sealed by Joseph A. Reed, P.E.*

F. STATEMENTS

1. *Code Compliance letter, dated 11/14/08, prepared by Rice Engineering, signed and sealed by L. David Rice, P.E., on November 14, 2008.*
2. *No financial interest letter, dated 11/14/08, prepared by Rice Engineering, signed and sealed by L. David Rice, P.E., on November 14, 2008.*

2. NEW EVIDENCE SUBMITTED

A. DRAWINGS

1. *Drawings #NPD2007 titled " 0.125 Series 3000 Una-Fab Panel ", sheets 1 through 23 of 23, prepared by Firestone Building Products Company, LLC, dated June 10, 2014, signed and sealed by Robert Nieminen, P.E., on June 26, 2014.*

B. TESTS

1. *None.*

C. CALCULATIONS

1. *None.*

Helmy A. Makar, P.E., M.S.
Product Control Unit Supervisor
NOA No. 14-0416.02
Expiration Date: 07/22/2019
Approval Date: 08/14/2014

D. QUALITY ASSURANCE

1. *By Miami-Dade County Department of Regulatory and Economic Resources.*

E. MATERIAL CERTIFICATIONS

1. *None.*

F. STATEMENTS

1. *Code Compliance letter with the current FBC, dated June 26, 2014, prepared by Trinity ERD, signed and sealed by Robert Nieminen, P.E., on June 26, 2014.*

Helmy A. Makar, P.E., M.S.
Product Control Unit Supervisor
NOA No. 14-0416.02
Expiration Date: 07/22/2019
Approval Date: 08/14/2014

SERIES 3000
UNA-FAB PANEL

BILL OF MATERIALS

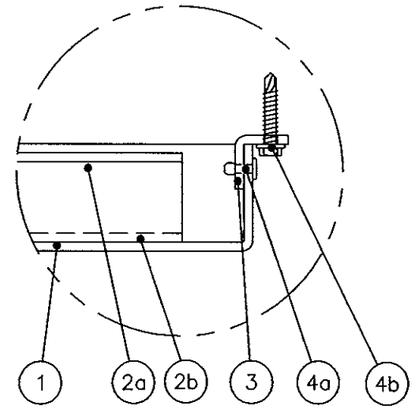

PANEL COMPOSITION

1. (.125) Aluminum Plate Panel (3003-H14)
2a. (.125) Formed Aluminum, Stiffener (6061-T6)
2b. Stiffener attachment, Acrylic adhesive 406/19GB

PANEL FASTENING

3. (.125) Aluminum formed clip (3003-H14)

PANEL FASTENERS

4a. Clip to Panel Fasteners (13" max panel span): Ø3/16" Alum. Body & Steel Mandral rivets. Qty. (2) Per clip
Clip to Panel Fasteners (56.5" max panel span): #10x1" Self Tapping screws. Qty. (2) Per clip
4b. Clip to Subgrit Fastener, #10-16 x 1" (3) Per Clip
4c. Framing fastener, #10-16 x 1-1/2"
4d. Subgrit to substrate #1/4-14 x 1-1/2"

SUBGRIT

5. Hat Channels, 7/8" Deep 14 Ga. (.075) galv.
5a. 8 Ga. (.164) Formed Galvanized, Subgrit
5b. 14 Ga. (.075) Formed Galvanized, Subgrit

ISOLATOR SHIMS & TAPE

6a. Standard glazing isolator shims as needed
6b. Dissimilar metals Separator Tape

SUBSTRATE

7a. 5/8" Gypsum board (Dens Glass)
7b. Valpro Shield underlayment
7c. Valpro Single sided perimeter / joint tape

STUD FRAMING

8a. Tracks, 1-1/2" x 6" 16 Ga. Galv.
8b. Studs, 1-1/2" x 6" 16 Ga. Galv.

FRAMING

9. 2" X 12" Yellow Pine

BACKER ROD

10. Rod, Ø5/8" Open cell neoprene

SEALANT

11. Horizontal and vertical joint sealant ,
Dow corning #756 SMS building sealant

FLASHINGS

12. Aluminum (.040) Perimeter flashing

TRINITY ERD
BUILDING SCIENCE RESEARCH | DESIGN | CONSULTATION

353 Christian Street, Unit #13
Oxford, CT 06478

TEL: 203 262 9245
FAX: 203 262 9243
WWW.TRINITYERD.COM

1. It shall be the responsibility of the structural engineer of record to verify the structural integrity of the structure to support the loads superimposed by the panels.
2. The panels have been designed and tested in accordance with the Florida Building Code and the 2005 Aluminum Design Manual. They are tested in accordance with Miami-Dade County protocol TAS 301. The laboratory tests and test reports are TAS201, TAS202, & TAS203.
3. All metal stud substrate shall be MIN. 16 Ga. Fy = 50 KSI.
4. All structural steel substrate shall be MIN. Fy = 36 KSI.
5. Panel Widths and Heights are limited as shown in elevations and details.
6. Separation of dissimilar materials must be maintained per section 2003.8.4 of the FBC.
7. This panel system has been tested, analyzed, and approved for design pressures not to exceed 120 PSF.
8. Clip spacing may not be altered. Each clip and fastener used must be installed as detailed on the drawings.

Maximum Design Pressure = +/- 120.0 psf
Maximum Panel Widths and Heights are limited as shown in Elevations and Details in sheet 2 of 23

PRODUCT REVISED
as complying with the Florida Building Code
Acceptance No 14-0416.02
Expiration Date 07/22/2019
By [signature]
Miami Dade Product Control

ROBERT NIEMINEN
LICENSE
No 59166
06/26/2014
STATE OF FLORIDA
PROFESSIONAL ENGINEER

01 OF 23 PAGES

NO.	DATE	BY	DESCRIPTION OF REVISIONS
5			
4			
3			
2			
1			

** NOTE TO INSTALLER **
These drawings represent Firestone's interpretation of the original architectural drawings. It is the responsibility of the installer to coordinate these drawings with the actual field conditions and dimensions as well as all other trade and provide Firestone with all panel face dimensions for fabrication. Please note that Firestone will not accept any responsibility for any delays or costs incurred due to changes made after the project has been released for fabrication. Firestone reserves the right to pursue compensation for costs incurred due to any changes made after the release for fabrication date.

Firestone BUILDING PRODUCTS
UNA-CLAD
1001 LUND BLVD. ANOKA, MINNESOTA 55303
NATIONWIDE 1-800-426-7737 LOCAL (763) 576-9595
Copyright © by Firestone Metal Products / UNA-CLAD

PROJECT NAME: MIAMI DADE BUILDING CODES
CUSTOMER NAME: FIRESTONE BUILDING PRODUCTS
PANEL DESCRIPTION: SERIES 3000 with 1.5" RETURNS
DRAWING DESCRIPTION: COVER
DATE: 06.10.14
SCALE FACTOR: 1=1
DRAFTER: JWJ
DRAWING NUMBER: NPD2007-004001
PAGE NUMBER: 001
FAB. NUMBER: 14485

TRINITY ERD
BUILDING SCIENCE RESEARCH | DESIGN | CONSULTATION

353 Christian Street, Unit #13
Oxford, CT 06478

TEL: 203 262 9245
FAX: 203 262 9243
WWW.TRINITYERD.COM

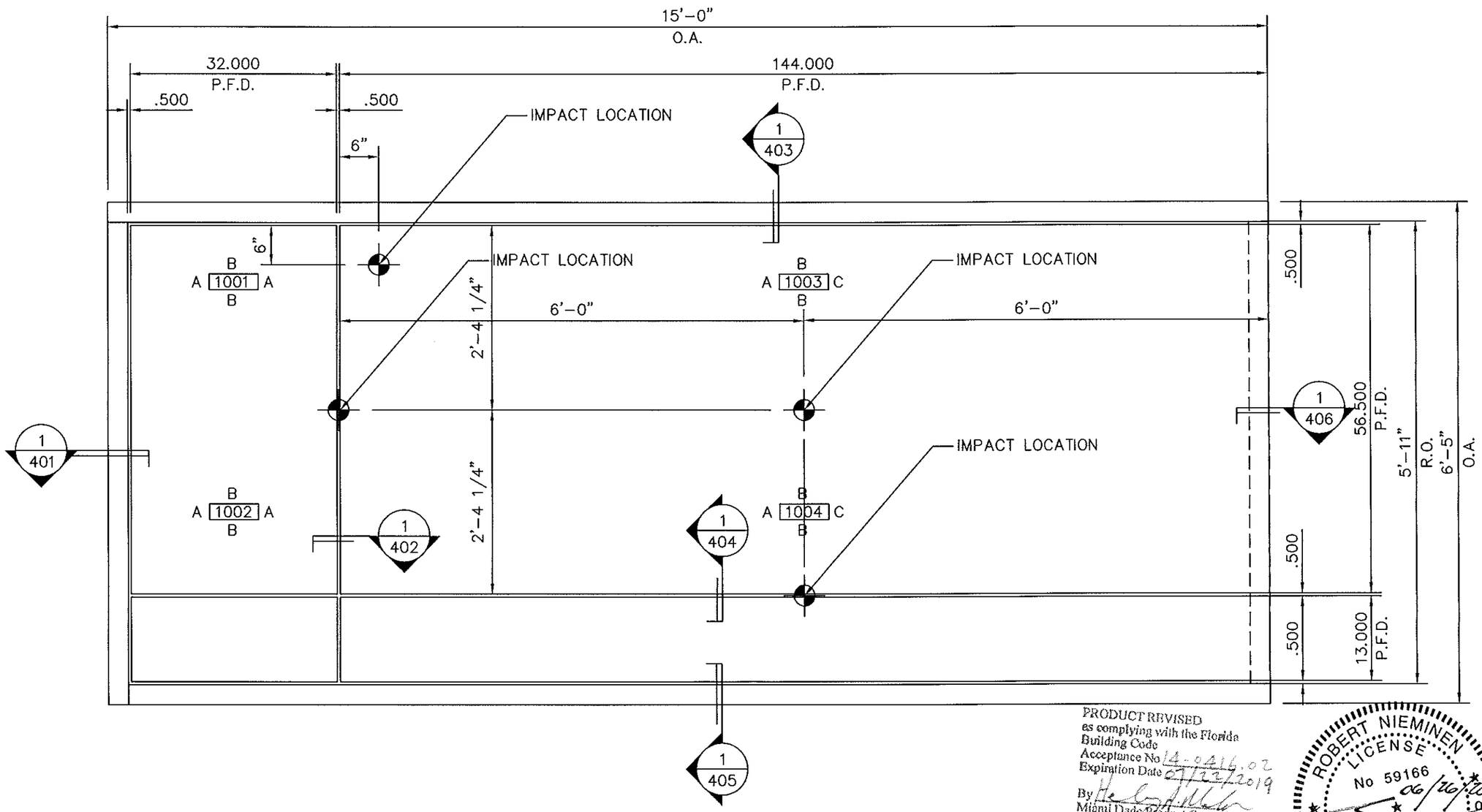

PRODUCT REVISED
as complying with the Florida
Building Code
Acceptance No 14-0416.02
Expiration Date 01/22/2019
By
Miami Dade Product Control

ROBERT NIEMINEN
LICENSE
No 59166
06/26/2014
STATE OF FLORIDA
PROFESSIONAL ENGINEER

1/201 ELEVATION
SCALE: 3/4" = 1'-0"

NO.	DATE	BY	DESCRIPTION OF REVISIONS
5			
4			
3			
2			
1			

** NOTE TO INSTALLER **
These drawings represent Firestones' interpretation of the original architectural drawings. It is the responsibility of the installer to coordinate these drawings with the actual field conditions and dimensions as well as all other trade and provide Firestone with all panel face dimensions for fabrication. Please note that Firestone will not accept any responsibility for any delays or costs incurred due to changes made after the project has been released for fabrication. Firestone reserves the right to pursue compensation for costs incurred due to any changes made after the release for fabrication date.

Firestone BUILDING PRODUCTS
UNI-CLAD
1001 LUND BLVD. ANOKA, MINNESOTA 55303
NATIONWIDE: 1-800-426-7737 LOCAL: (763) 576-9595
Copyright © by Firestone Metal Products / UNI-CLAD

PROJECT NAME: MIAMI DADE BUILDING CODES
CUSTOMER NAME: FIRESTONE BUILDING PRODUCTS
PANEL DESCRIPTION: SERIES 3000 with 1.5" RETURNS
DRAWING DESCRIPTION: ELEVATIONS

DATE: 06.10.14
SCALE FACTOR: 1=16
DRAFTER: JWJ
DRAWING NUMBER: NPD2007-004201
PAGE NUMBER: 201

FAB. NUMBER: 14485

TRINITY ERD
BUILDING SCIENCE RESEARCH | DESIGN | CONSULTATION
353 Christian Street, Unit #13
Oxford, CT 06478
TEL: 203 262 9245
FAX: 203 262 9243
WWW.TRINITYERD.COM

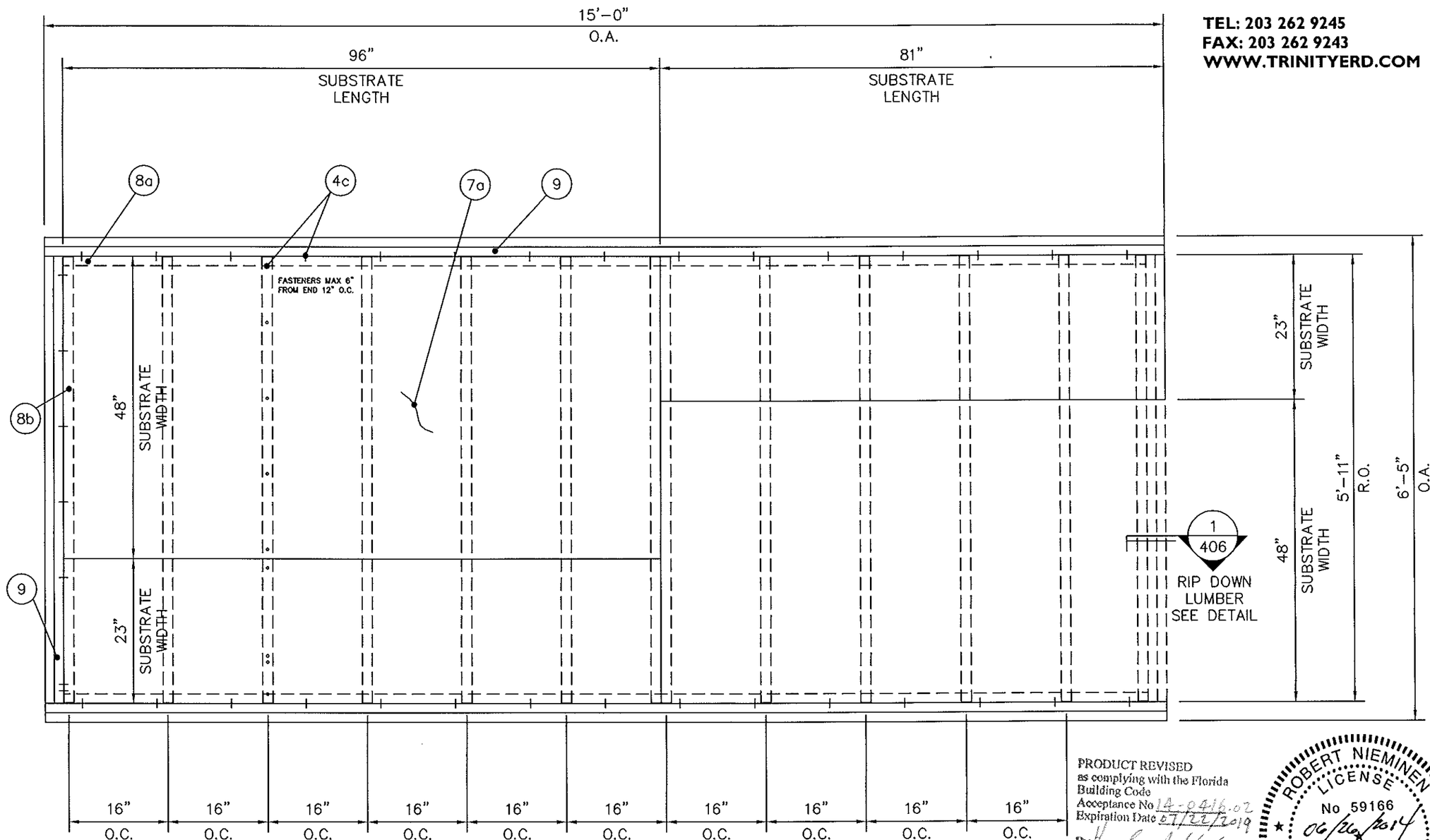

PRODUCT REVISED
as complying with the Florida Building Code
Acceptance No 14-0416.02
Expiration Date 07/22/2019
By
Miami Dade Product Control

ROBERT NIEMINEN
LICENSE
No 59166
06/26/2014
STATE OF FLORIDA
PROFESSIONAL ENGINEER

1 / 202 SUBSTRATE ELEVATION
SCALE: 3/4" = 1'-0"

NO.	DATE	BY	DESCRIPTION OF REVISIONS
5			
4			
3			
2			
1			

** NOTE TO INSTALLER **
These drawings represent Firestone's interpretation of the original construction drawings. It is the responsibility of the installer to coordinate these drawings with the actual field conditions and dimensions as well as all other trade and provide Firestone with all panel face dimensions for fabrication. Please note that Firestone will not accept any responsibility for any delays or costs incurred due to changes made after the project has been released for fabrication. Firestone reserves the right to pursue compensation for costs incurred due to any changes made after the release for fabrication date.

Firestone BUILDING PRODUCTS
UNA-CLAD
1001 LUND BLVD. ANOKA, MINNESOTA 55303
NATIONWIDE 1-800-426-7737 LOCAL (763) 576-9595
Copyright © by Firestone Metal Products / UNA-CLAD

PROJECT NAME: MIAMI DADE BUILDING CODES
CUSTOMER NAME: FIRESTONE BUILDING PRODUCTS
PANEL DESCRIPTION: SERIES 3000 with 1.5" RETURNS
DRAWING DESCRIPTION: ELEVATIONS
DATE: 06.10.14
SCALE FACTOR: 1=16
DRAFTER: JWJ
DRAWING NUMBER: NPD2007-004202
PAGE NUMBER: 202

FAB. NUMBER: 14485

TRINITY ERD
BUILDING SCIENCE RESEARCH | DESIGN | CONSULTATION

353 Christian Street, Unit #13
Oxford, CT 06478

TEL: 203 262 9245
FAX: 203 262 9243
WWW.TRINITYERD.COM

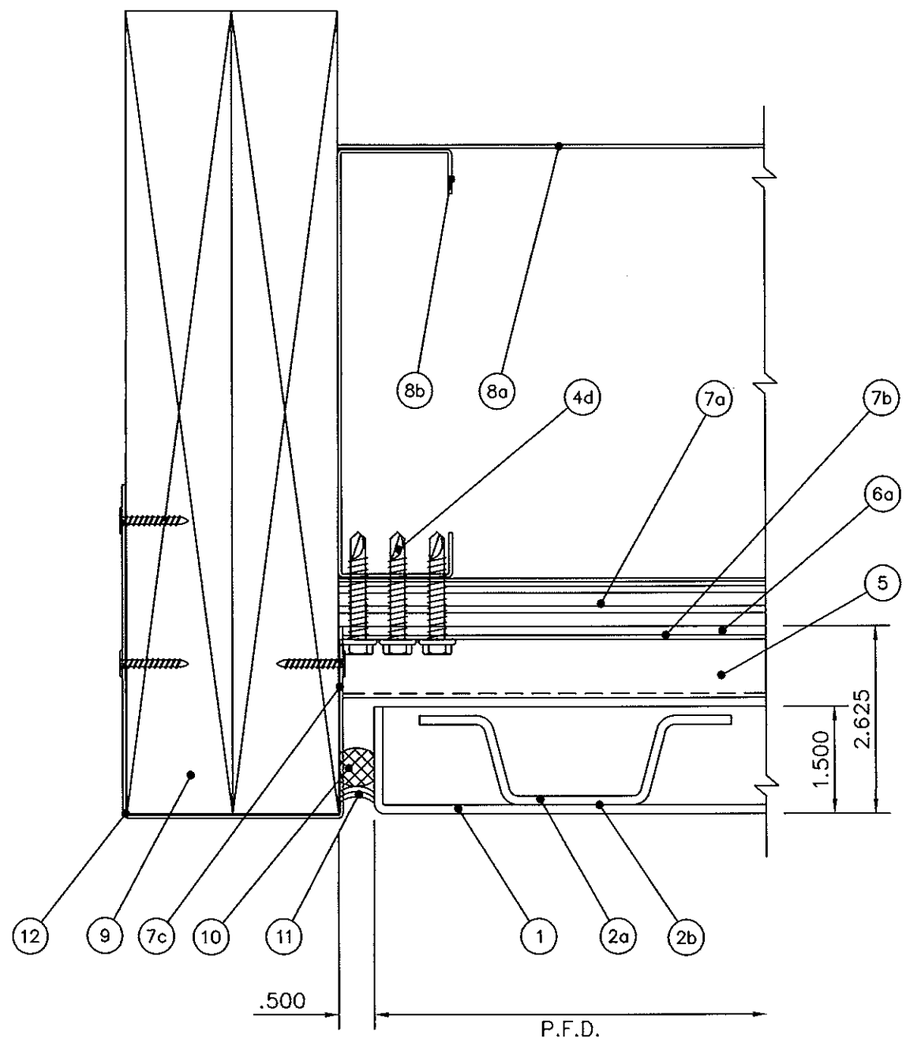

PRODUCT REVISED
as complying with the Florida
Building Code
Acceptance No 14-0416.02
Expiration Date 07/22/2019
By
Miami Dade Product Control

ROBERT NIEMINEN
LICENSE
No 59166
06/26/2014
STATE OF FLORIDA
PROFESSIONAL ENGINEER

1 / 401 PANEL TERMINATION DETAIL
SCALE: 6" = 1'- 0"

NO.	DATE	BY	DESCRIPTION OF REVISIONS
5			
4			
3			
2			
1			

** NOTE TO INSTALLER **
These drawings represent Firestones' interpretation of the original architectural drawings. It is the responsibility of the installer to coordinate these drawings with the actual field conditions and dimensions as well as all other trade and provide Firestone with all panel face dimensions for fabrication. Please note that Firestone will not accept any responsibility for any delays or costs incurred due to changes made after the project has been released for fabrication. Firestone reserves the right to pursue compensation for costs incurred due to any changes made after the release for fabrication date.

Firestone BUILDING PRODUCTS
UNI-CLAD
1001 LUND BLVD. ANOKA, MINNESOTA 55303
NATIONWIDE 1-800-426-7737 LOCAL (763) 576-8595
Copyright © by Firestone Metal Products / UNI-CLAD

PROJECT NAME: MIAMI DADE BUILDING CODES
CUSTOMER NAME: FIRESTONE BUILDING PRODUCTS
PANEL DESCRIPTION: SERIES 3000 with 1.5" RETURNS
DRAWING DESCRIPTION: DETAILS

DATE: 06.10.14
SCALE FACTOR: 1=2
DRAFTER: JWJ
DRAWING NUMBER: NPD2007-004401
PAGE NUMBER: 401

FAB. NUMBER: 14485

TRINITY ERD
BUILDING SCIENCE RESEARCH | DESIGN | CONSULTATION

353 Christian Street, Unit #13
Oxford, CT 06478

TEL: 203 262 9245
FAX: 203 262 9243
WWW.TRINITYERD.COM

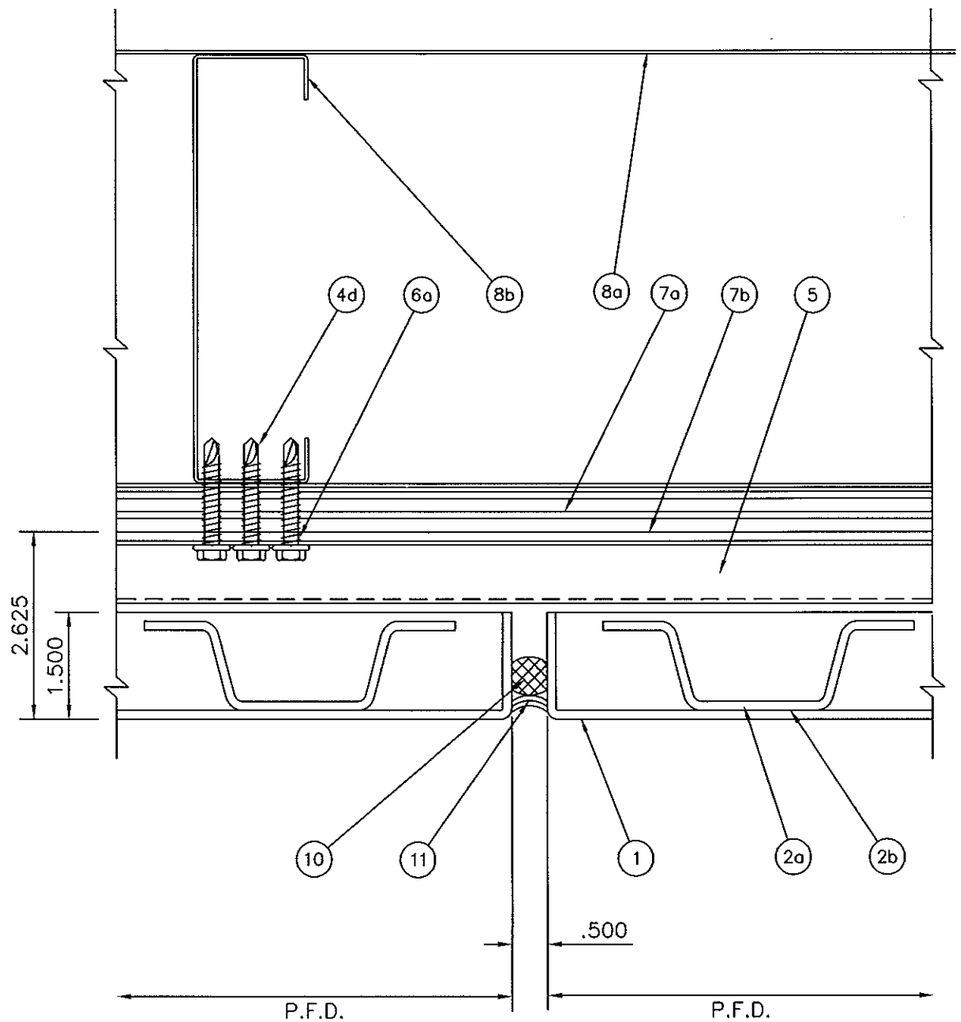

PRODUCT REVISED
as complying with the Florida
Building Code
Acceptance No 14-0416.02
Expiration Date 07/22/2019
By
Miami Dade Product Control

ROBERT NIEMINEN
LICENSE
No 59166
06/26/2019
STATE OF
FLORIDA
PROFESSIONAL ENGINEER

1 / 402 TYP. VERTICAL JOINT DETAIL
SCALE: 6" = 1'- 0"

NO.	DATE	BY	DESCRIPTION OF REVISIONS
A			
A			
A			
A			
A			

** NOTE TO INSTALLER **
These drawings represent Firestone's interpretation of the original architectural drawings. It is the responsibility of the installer to coordinate these drawings with the actual field conditions and dimensions as well as all other trade and provide Firestone with all panel face dimensions for fabrication. Please note that Firestone will not accept any responsibility for any delays or costs incurred due to changes made after the project has been released for fabrication. Firestone reserves the right to pursue compensation for costs incurred due to any changes made after the release for fabrication date.

Firestone BUILDING PRODUCTS
UNI-CLAD
1001 LUND BLVD. ANOKA, MINNESOTA 55303
NATIONWIDE 1-800-426-7737 LOCAL (763) 576-9595
Copyright © by Firestone Metal Products / UNI-CLAD

PROJECT NAME: MIAMI DADE BUILDING CODES
CUSTOMER NAME: FIRESTONE BUILDING PRODUCTS
PANEL DESCRIPTION: SERIES 3000 with 1.5" RETURNS
DRAWING DESCRIPTION: DETAILS
DATE: 06.10.14
SCALE FACTOR: 1=2
DRAFTER: JWJ
DRAWING NUMBER: RPD2007-004402
PAGE NUMBER: 402

05 OF 23 PAGES

FAB. NUMBER: 14485

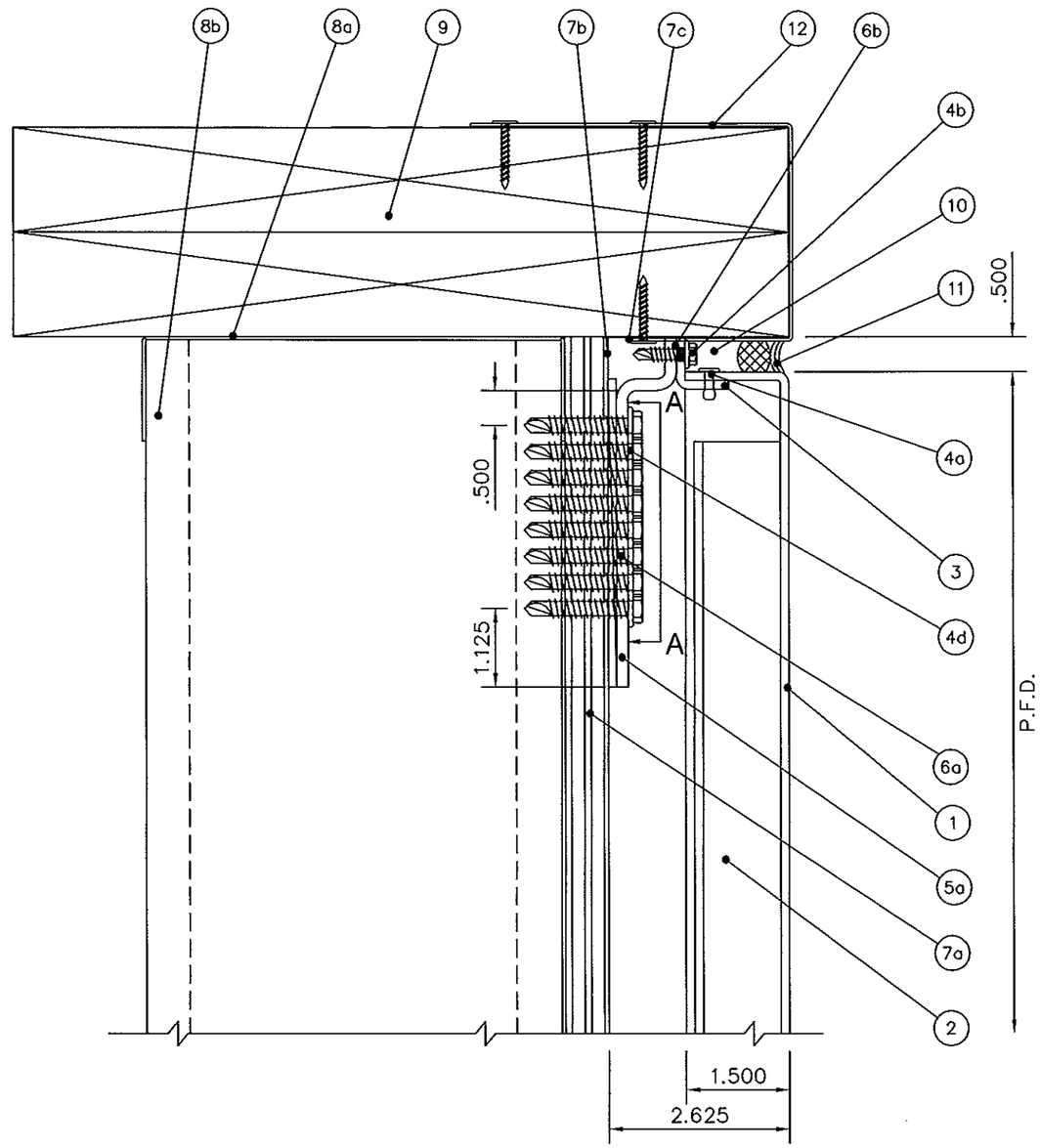

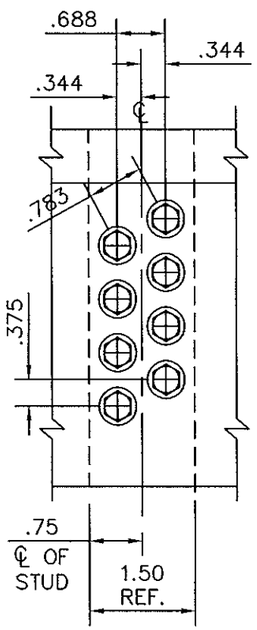

SECTION A-A

PRODUCT REVISED
as complying with the Florida
Building Code
Acceptance No 14-0416.02
Expiration Date 07/22/2019
By
Miami Dade Product Control

ROBERT NIEMINEN
LICENSE
No 59166
06/26/2014
STATE OF
FLORIDA
PROFESSIONAL ENGINEER

1 / 403 HEAD TERMINATION DETAIL
SCALE: 6" = 1'- 0"

TRINITY ERD
BUILDING SCIENCE RESEARCH | DESIGN | CONSULTATION

353 Christian Street, Unit #13
Oxford, CT 06478

TEL: 203 262 9245
FAX: 203 262 9243
WWW.TRINITYERD.COM

NO.	DATE	BY	DESCRIPTION OF REVISIONS
A			
A			
A			
A			
A			
A			

*** NOTE TO INSTALLER ***

These drawings represent Firestones interpretation of the original construction documents. It is the responsibility of the installer to coordinate these drawings with the actual field conditions and dimensions as well as all other trade and provide Firestone with all panel face dimensions for fabrication. Please note that Firestone will not accept any responsibility for any delays or costs incurred due to changes made after the project has been released for fabrication. Firestone reserves the right to pursue compensation for costs incurred due to any changes made after the release for fabrication date.

Firestone BUILDING PRODUCTS
UNA-CLAD
1001 LUND BLVD. ANOKA, MINNESOTA 55303
NATIONWIDE 1-800-426-7737 LOCAL (763) 576-9595

Copyright © by Firestone Metal Products / UNA-CLAD

PROJECT NAME: MIAMI DADE BUILDING CODES
CUSTOMER NAME: FIRESTONE BUILDING PRODUCTS
PANEL DESCRIPTION: SERIES 3000 with 1.5" RETURNS
DRAWING DESCRIPTION: DETAILS

DATE: 06.10.14
SCALE FACTOR: 1=2
DRAFTER: JWJ
DRAWING NUMBER: NP02007-004403
PAGE NUMBER: 403

06 OF 23 PAGES

FAB. NUMBER: 14485

TRINITY ERD
BUILDING SCIENCE RESEARCH | DESIGN | CONSULTATION

353 Christian Street, Unit #13
Oxford, CT 06478

TEL: 203 262 9245
FAX: 203 262 9243
WWW.TRINITYERD.COM

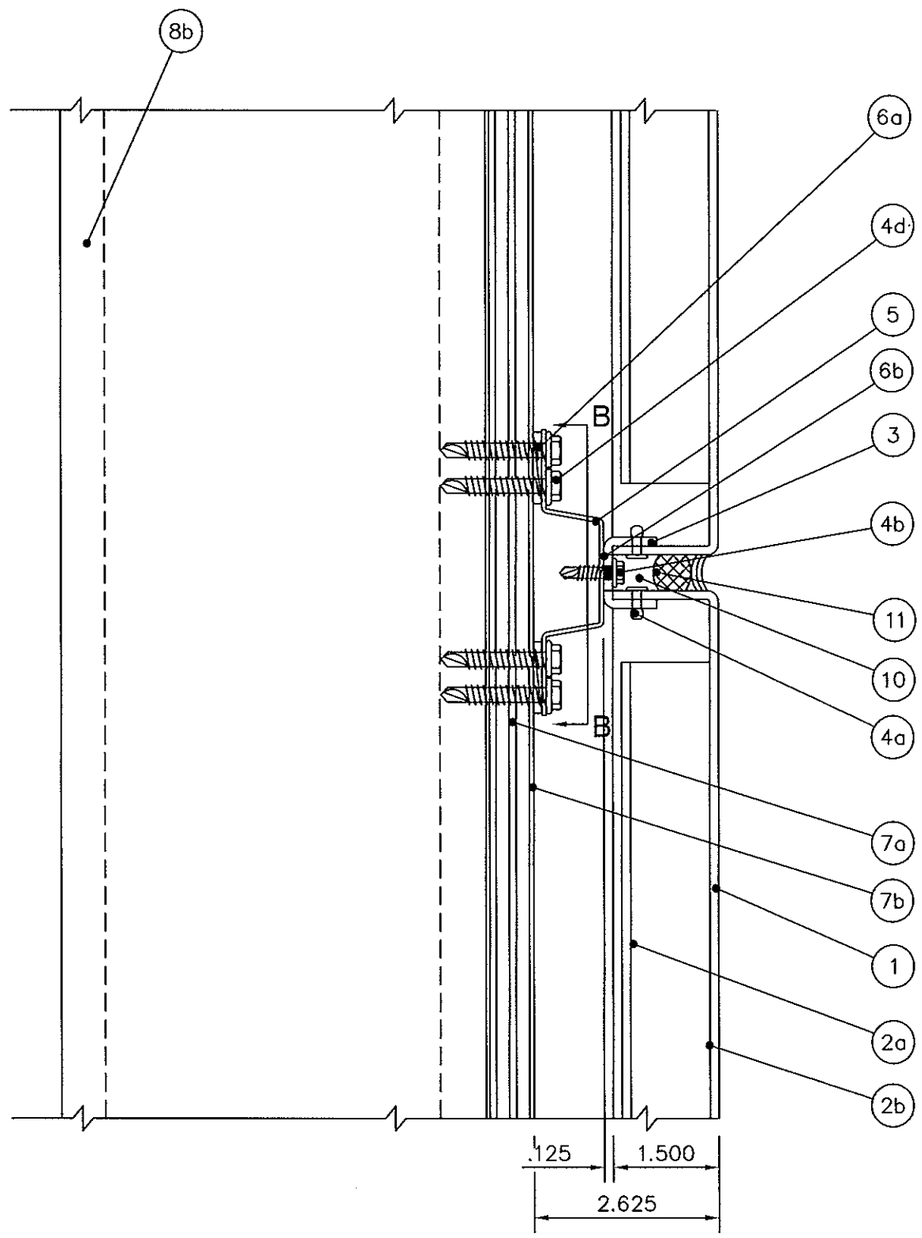

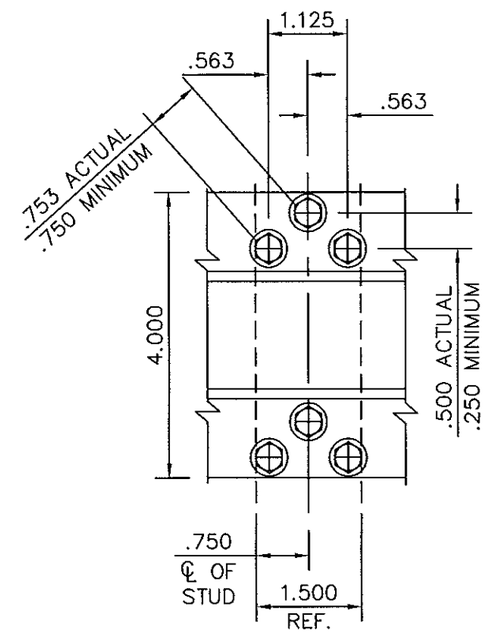

SECTION B-B

PRODUCT REVISED
as complying with the Florida
Building Code
Acceptance No 14-0416.02
Expiration Date 07/22/2019
By
Miami Dade Product Control

ROBERT NIEMINEN
LICENSE
No 59166
06/26/2014
STATE OF
FLORIDA
PROFESSIONAL ENGINEER

1 / 404 TYP. HORZ. JOINT DETAIL
SCALE: 6" = 1'- 0"

07 OF 23 PAGES

NO.	DATE	BY	DESCRIPTION OF REVISIONS
1			
2			
3			
4			
5			

** NOTE TO INSTALLER **
These drawings represent Firestones interpretation of the original construction drawings. It is the responsibility of the installer to coordinate these drawings with the actual field conditions and dimensions as well as all other trade and provide Firestone with all panel face dimensions for fabrication. Please note that Firestone will not accept any responsibility for any delays or costs incurred due to changes made after the project has been released for fabrication. Firestone reserves the right to pursue compensation for costs incurred due to any changes made after this release for fabrication date.

Firestone BUILDING PRODUCTS
UNI-CLAD
1001 LUND BLVD. ANOKA, MINNESOTA 55303
NATIONWIDE 1-800-426-7737 LOCAL (763) 576-9595
Copyright © by Firestone Metal Products / UNI-CLAD

PROJECT NAME: MIAMI DADE BUILDING CODES
CUSTOMER NAME: FIRESTONE BUILDING PRODUCTS
PANEL DESCRIPTION: SERIES 3000 with 1.5" RETURNS
DRAWING DESCRIPTION: DETAILS

DATE: 06.10.14
SCALE FACTOR: 1=2
DRAFTER: JWJ
DRAWING NUMBER: NPD2007-004404
PAGE NUMBER: 404

FAB. NUMBER: 14485

TRINITY ERD
BUILDING SCIENCE RESEARCH | DESIGN | CONSULTATION

353 Christian Street, Unit #13
Oxford, CT 06478

TEL: 203 262 9245
FAX: 203 262 9243
WWW.TRINITYERD.COM

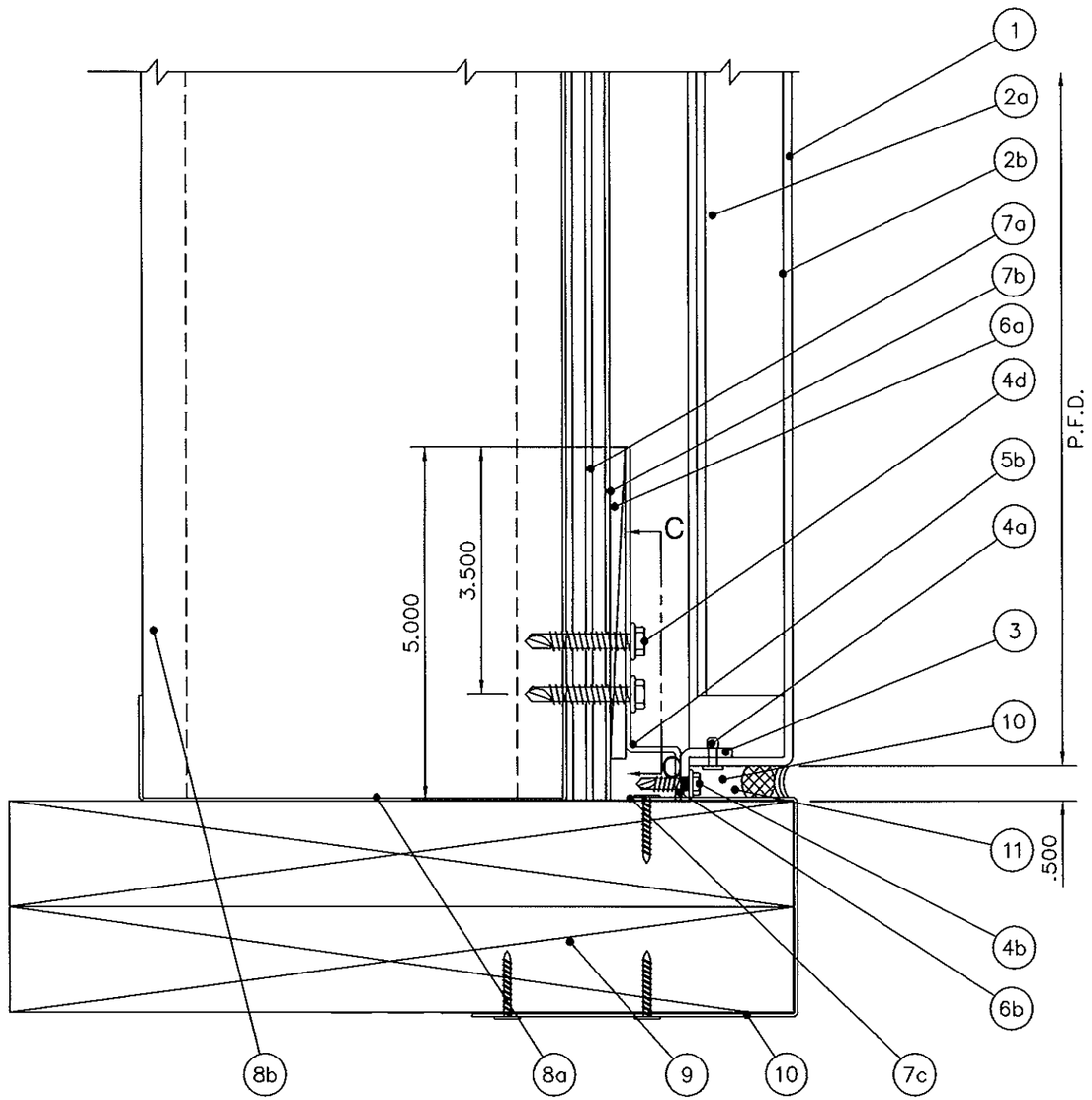

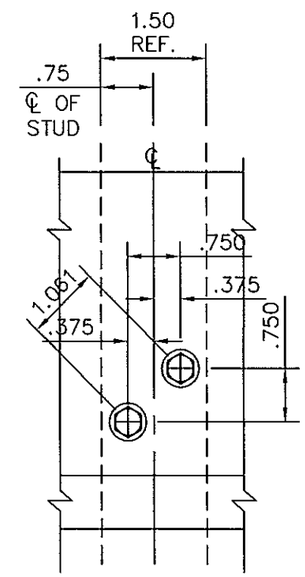

SECTION C-C

PRODUCT REVISED
as complying with the Florida
Building Code
Acceptance No 14-0416.02
Expiration Date 07/22/2019
By
Miami Dade Product Control

ROBERT NIEMINEN
LICENSE
No 59166
06/26/2014
STATE OF
FLORIDA
PROFESSIONAL ENGINEER

1 / 405 BASE TERMINATION DETAIL
SCALE: 6" = 1'- 0"

NO.	DATE	BY	DESCRIPTION OF REVISIONS
5			
4			
3			
2			
1			

*** NOTE TO INSTALLER ***
These drawings represent Firestone's interpretation of the original construction documents. It is the responsibility of the installer to coordinate these drawings with the actual field conditions and dimensions as well as all other trade and provide Firestone with all panel face dimensions for fabrication. Please note that Firestone will not accept any responsibility for any delays or costs incurred due to changes made after the project has been released for fabrication. Firestone reserves the right to pursue compensation for costs incurred due to any changes made after the release for fabrication date.

Firestone BUILDING PRODUCTS
UNA-CLAD™
1001 LUND BLVD. ANOKA, MINNESOTA 55303
NATIONWIDE 1-800-426-7737 LOCAL (763) 576-9595
Copyright © by Firestone Metal Products / UNA-CLAD

PRODUCT NAME: MIAMI DADE BUILDING CODES
CUSTOMER NAME: FIRESTONE BUILDING PRODUCTS
PANEL DESCRIPTION: SERIES 3000 with 1.5" RETURNS
DRAWING DESCRIPTION: DETAILS
DATE: 06.10.14
SCALE FACTOR: 1=2
DRAFTER: JWJ
DRAWING NUMBER: NP02007-004405
PAGE NUMBER: 405

FAB. NUMBER: 14485

TRINITY ERD
BUILDING SCIENCE RESEARCH | DESIGN | CONSULTATION

353 Christian Street, Unit #13
Oxford, CT 06478

TEL: 203 262 9245
FAX: 203 262 9243
WWW.TRINITYERD.COM

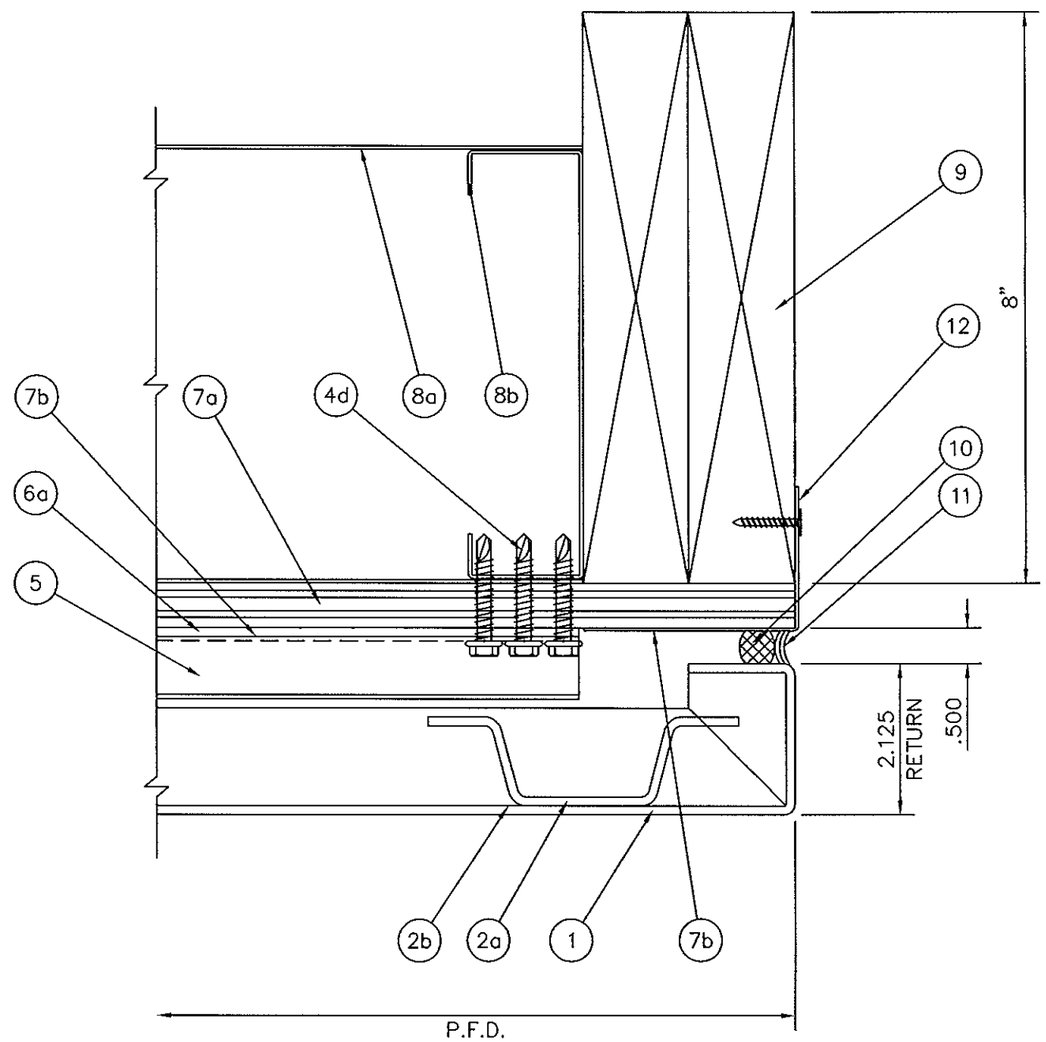

PRODUCT REVISED
as complying with the Florida
Building Code
Acceptance No 14-0416.02
Expiration Date 07/22/2019
By
Miami Dade Product Control

ROBERT NIEMINEN
LICENSE
No 59166
06/26/2014
STATE OF
FLORIDA
PROFESSIONAL ENGINEER

1 / 406 OUTSIDE CORNER DETAIL
SCALE: 6" = 1'- 0"

NO.	DATE	BY	DESCRIPTION OF REVISIONS
1			
2			
3			
4			
5			

*** NOTE TO INSTALLER ***
These drawings represent Firestone interpretation of the original construction drawings. It is the responsibility of the installer to coordinate these drawings with the actual field conditions and dimensions as well as all other trade and provide Firestone with all panel face dimensions for fabrication. Please note that Firestone will not accept any responsibility for any delays or costs incurred due to changes made after the project has been released for fabrication. Firestone reserves the right to pursue compensation for costs incurred due to any changes made after this release for fabrication date.

Firestone BUILDING PRODUCTS
UNA-CLAD
1001 LUND BLVD, ANOKA, MINNESOTA 55303
NATIONWIDE 1-800-426-7737 LOCAL (763) 576-9595
Copyright © by Firestone Metal Products / UNA-CLAD

PROJECT NAME: MIAMI DADE BUILDING CODES
CUSTOMER NAME: FIRESTONE BUILDING PRODUCTS
PANEL DESCRIPTION: SERIES 3000 with 1.5" RETURNS
DRAWING DESCRIPTION: DETAILS
DATE: 06.10.14
SCALE FACTOR: 1=2
DRAFTER: JWJ
DRAWING NUMBER: NPD2007-004406
PAGE NUMBER: 406
09 OF 23 PAGES
FAB. NUMBER: 14485

THIS IS THE ORIENTATION OF THE PANEL AS IT RELATES TO THE BUILDING ELEVATION THE ARROW POINTS UP

CLIPS SPACED 2" TO 4" FROM
EACH END AND 4" O.C. MAX TYP.

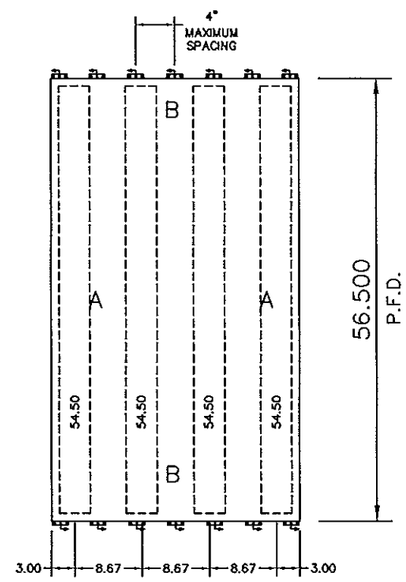

FACE = + 1.300

TOP

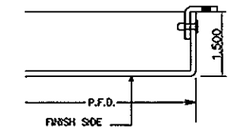

DETAIL B

FACE = + 1.300

BOTTOM

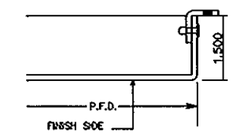

DETAIL B

FACE = + 1.300

LEFT

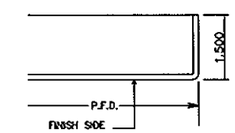

DETAIL A

FACE = + 1.300

RIGHT

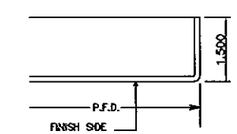

DETAIL A

TRINITY ERD
BUILDING SCIENCE RESEARCH | DESIGN | CONSULTATION

353 Christian Street, Unit #13
Oxford, CT 06478

TEL: 203 262 9245
FAX: 203 262 9243
WWW.TRINITYERD.COM

ROBERT NIEMINEN LICENSE No 59166 06/26/2014 STATE OF FLORIDA PROFESSIONAL ENGINEER

PRODUCT REVISED
as complying with the Florida Building Code
Acceptance No 14-0416.02
Expiration Date 07/22/2019
By
Miami Dade Product Control

FINISH SIDE UP

1001

GRAIN DIRECTION

Firestone BUILDING PRODUCTS
UNA-CLAD
NATIONWIDE 1-800-426-7737 LOCAL (763) 576-9595

Copyright © by Firestone Metal Products / UNA-CLAD

PANEL DESCRIPTION SERIES 3000

PANEL NUMBER	QTY.	WIDTH	LENGTH
1001	1	56.500	32.000

PFD = PANEL FACE DIMENSION

1.250" STIFFENERS
FOR LOCATION SEE ABOVE

CUSTOMER: FIRESTONE BUILDING PRODUCTS		DRAWN BY: JWJ
FAB NUMBER: 13292	RELEASE: 1	SCALE: 1=20
MATERIAL: Aluminum		DATE: 06.25.14
THICKNESS: 0.125	DRAWING NO. NPD2007-004 REL1 PN1001.dwg	
FINISH: Sierra Tan	PRE: ☐ POST: ☒	PAGE NO. 1 of 4

THIS IS THE ORIENTATION OF THE PANEL AS IT RELATES TO THE BUILDING ELEVATION THE ARROW POINTS UP

CLIPS SPACED 2" TO 4" FROM
EACH END AND 4" O.C. MAX TYP.

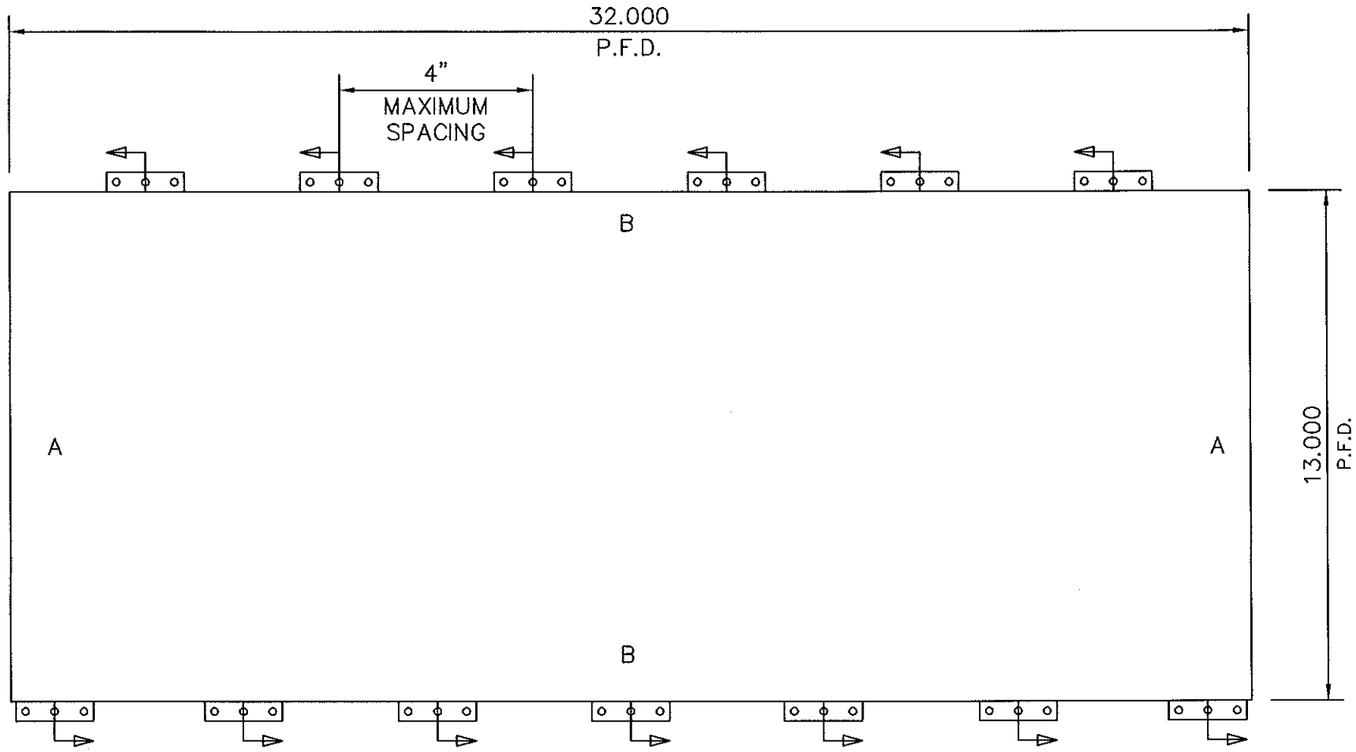

FACE = + 1.300

TOP

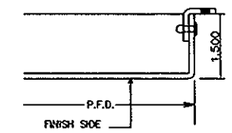

DETAIL B

FACE = + 1.300

BOTTOM

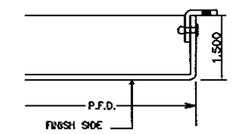

DETAIL B

FACE = + 1.300

LEFT

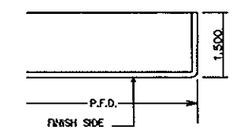

DETAIL A

FACE = + 1.300

RIGHT

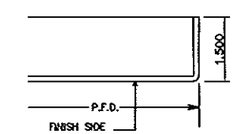

DETAIL A

TRINITY ERD
BUILDING SCIENCE RESEARCH | DESIGN | CONSULTATION

353 Christian Street, Unit #13
Oxford, CT 06478

TEL: 203 262 9245
FAX: 203 262 9243
WWW.TRINITYERD.COM

ROBERT NIEMINEN
LICENSE
No 59166
06/26/2014
STATE OF FLORIDA
PROFESSIONAL ENGINEER

PRODUCT REVISED
as complying with the Florida Building Code
Acceptance No. 14-0416.02
Expiration Date 07/22/2019
By
Miami Dade Product Control

FINISH SIDE UP

1002

GRAIN DIRECTION

110F23 PAGES

Firestone BUILDING PRODUCTS
UNA-CLAD
NATIONWIDE 1-800-426-7737 LOCAL (763) 576-9595
Copyright © by Firestone Metal Products / UNA-CLAD

PANEL DESCRIPTION SERIES 3000

PANEL NUMBER	QTY.	WIDTH	LENGTH
1002	1	13.000	32.000

PFD = PANEL FACE DIMENSION

CUSTOMER: FIRESTONE BUILDING PRODUCTS		DRAWN BY: JWJ
FAB NUMBER: 13292	RELEASE: 1	SCALE: 1=4
MATERIAL: Aluminum		DATE: 06.25.14
THICKNESS: 0.125	DRAWING NO. NPD2007-004 REL1 PN1002.dwg	
FINISH: Sierra Tan	PRE: ☐ POST: ☒	PAGE NO. 2 of 4

THIS IS THE ORIENTATION OF THE PANEL AS IT RELATES TO THE BUILDING ELEVATION THE ARROW POINTS UP

CLIPS SPACED 2" TO 4" FROM EACH END AND 4" O.C. MAX TYP.

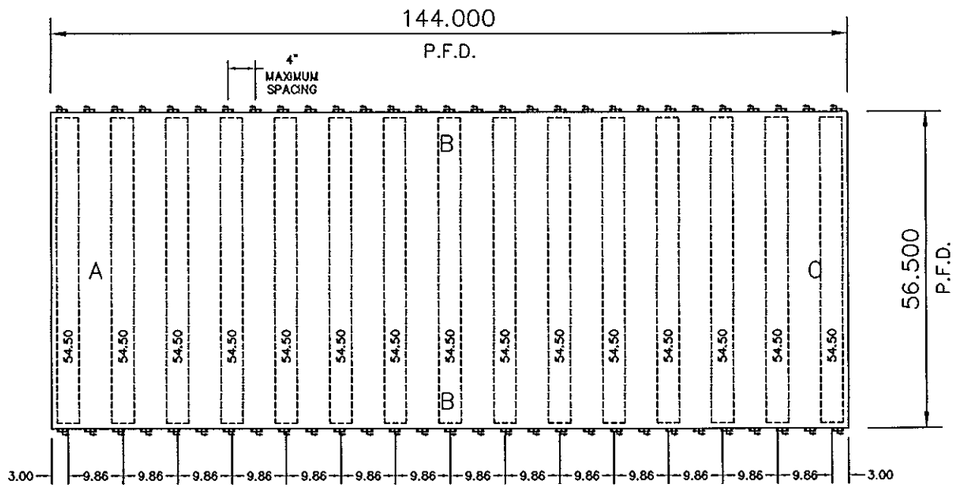

FACE = + 1.300

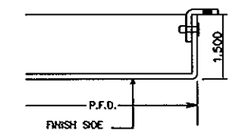

TOP

DETAIL B

FACE = + 1.300

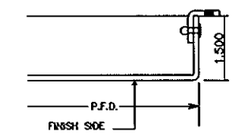

BOTTOM

DETAIL B

FACE = + 1.300

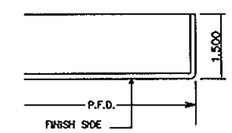

LEFT

DETAIL A

FACE = + 3.225

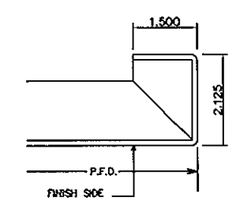

RIGHT

DETAIL C

PRODUCT REVISED
as complying with the Florida Building Code
Acceptance No 14-0416.02
Expiration Date 07/22/2019
By
Miami Dade Product Control

FINISH SIDE UP

1003

GRAIN DIRECTION

12 OF 23 PAGES

TRINITY ERD
BUILDING SCIENCE RESEARCH | DESIGN | CONSULTATION
353 Christian Street, Unit #13
Oxford, CT 06478
TEL: 203 262 9245
FAX: 203 262 9243
WWW.TRINITYERD.COM

ROBERT NIEMINEN LICENSE No 59166 06/26/2014 STATE OF FLORIDA PROFESSIONAL ENGINEER

Firestone BUILDING PRODUCTS
UNA-CLAD
NATIONWIDE 1-800-426-7737 LOCAL (763) 576-9595
Copyright © by Firestone Metal Products / UNA-CLAD

PANEL DESCRIPTION SERIES 3000

PANEL NUMBER	QTY.	WIDTH	LENGTH
1003	1	56.500	144.000

PFD = PANEL FACE DIMENSION

1.250" STIFFENERS FOR LOCATION SEE ABOVE

CUSTOMER: FIRESTONE BUILDING PRODUCTS		DRAWN BY: JWJ
FAB NUMBER: 13292	RELEASE: 1	SCALE: 1=28
MATERIAL: Aluminum		DATE: 06.25.14
THICKNESS: 0.125	DRAWING NO. NPD2007-004 REL1 PN1003.dwg	
FINISH: Sierra Tan	PRE: ☐ POST: ☒	PAGE NO. 3 of 4

THIS IS THE ORIENTATION OF THE PANEL AS IT RELATES TO THE BUILDING ELEVATION THE ARROW POINTS UP

CLIPS SPACED 2" TO 4" FROM EACH END AND 4" O.C. MAX TYP.

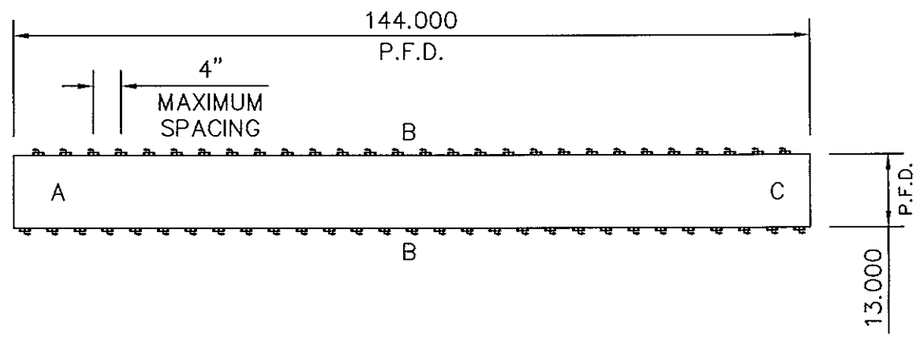

FACE = + 1.300

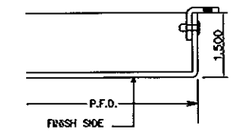

TOP

DETAIL B

FACE = + 1.300

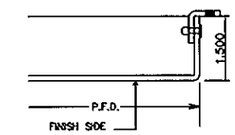

BOTTOM

DETAIL B

FACE = + 1.300

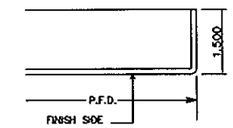

LEFT

DETAIL A

FACE = + 3.225

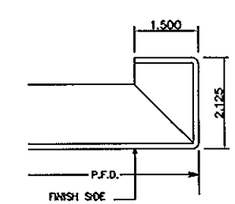

RIGHT

DETAIL C

PRODUCT REVISED
as complying with the Florida
Building Code
Acceptance No 14-0416.02
Expiration Date 07/22/2019
By
Miami Dade Product Control

FINISH SIDE UP

1004

GRAIN DIRECTION

13 OF 23 PAGES

TRINITY ERD
BUILDING SCIENCE RESEARCH | DESIGN | CONSULTATION

353 Christian Street, Unit #13
Oxford, CT 06478

TEL: 203 262 9245
FAX: 203 262 9243
WWW.TRINITYERD.COM

ROBERT NIEMINEN
LICENSE
No 59166
STATE OF FLORIDA
PROFESSIONAL ENGINEER

Firestone BUILDING PRODUCTS
UNA-CLAD
NATIONWIDE 1-800-426-7737 LOCAL (763) 576-9595
Copyright © by Firestone Metal Products / UNA-CLAD

PANEL DESCRIPTION SERIES 3000

PANEL NUMBER	QTY.	WIDTH	LENGTH
1004	1	13.000	144.000

PFD = PANEL FACE DIMENSION

CUSTOMER: FIRESTONE BUILDING PRODUCTS		DRAWN BY: JWJ
FAB NUMBER: 13292	RELEASE: 1	SCALE: 1=28
MATERIAL: Aluminum		DATE: 06.25.14
THICKNESS: 0.125	DRAWING NO. NPD2007-004 REL1 PN1004.dwg	
FINISH: Sierra Tan	PRE: ☐ POST: ☒	PAGE NO. 4 of 4

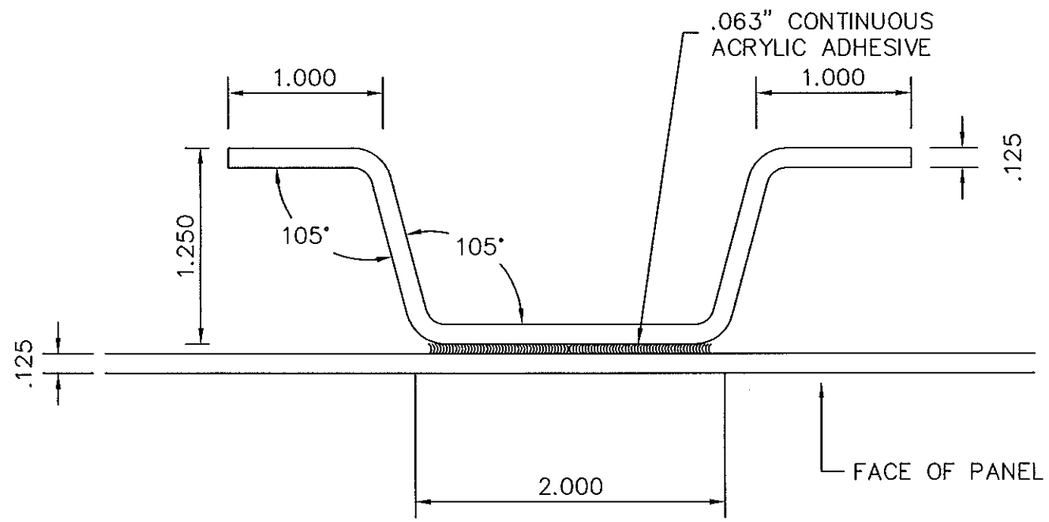

DESCRIPTION	PANEL STIFFENER CHANNEL			
PART #	QTY.	LENGTH	FIELD APPLIED	SHOP APPLIED
ST1	19	54.50		X

TRINITY ERD
BUILDING SCIENCE RESEARCH | DESIGN | CONSULTATION

353 Christian Street, Unit #13
Oxford, CT 06478

TEL: 203 262 9245
FAX: 203 262 9243
WWW.TRINITYERD.COM

ROBERT NIEMINEN
LICENSE
No 59166
06/26/2014
STATE OF FLORIDA
PROFESSIONAL ENGINEER

PRODUCT REVISED
complying with the Florida
Building Code
Acceptance No 14-0416.02
Expiration Date 07/22/2019
By
Miami Dade Product Control

14 OF 23 PAGES

Firestone
BUILDING PRODUCTS
UNA-CLAD
NATIONWIDE 1-800-426-7737 LOCAL (763) 576-9595
Copyright © by Firestone Metal Products / UNA-CLAD

PANEL DESCRIPTION SERIES 3000

PANEL NUMBER	QTY.	WIDTH	LENGTH

PFD = PANEL FACE DIMENSION

CUSTOMER: FIRESTONE BUILDING PRODUCTS		DRAWN BY: JWJ
FAB NUMBER: 13292	RELEASE: 1	SCALE: 1=1
MATERIAL: Aluminum		DATE: 06.25.14
THICKNESS: 0.125	DRAWING NO. NPD2007-004 Rel1 Stiffener Count.dwg	
FINISH: Mill Finish	PRE: ☐ POST: ☐	PAGE NO. P1

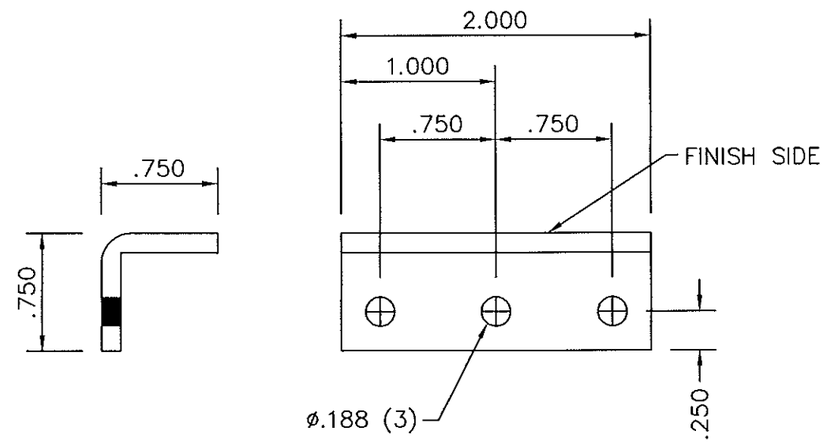

ROBERT NIEMINEN
LICENSE
No. 59166
06/26/2014
STATE OF
FLORIDA
PROFESSIONAL ENGINEER

TRINITY ERD
BUILDING SCIENCE RESEARCH | DESIGN | CONSULTATION
353 Christian Street, Unit #13
Oxford, CT 06478
TEL: 203 262 9245
FAX: 203 262 9243
WWW.TRINITYERD.COM

DESCRIPTION	.125" ALUMINUM PANEL CLIP			
PART #	QTY.	LENGTH	FIELD APPLIED	SHOP APPLIED
C1	568	2.00	X	

PRODUCT REVISED
as complying with the Florida
Building Code
Acceptance No 14-0416.02
Expiration Date 07/22/2019
By
Miami Dade Product Control

Firestone
BUILDING PRODUCTS
UNA-CLAD
NATIONWIDE 1-800-426-7737 LOCAL (763) 576-9595
Copyright © by Firestone Metal Products / UNA-CLAD

PANEL DESCRIPTION SERIES 3000			
PANEL NUMBER	QTY.	WIDTH	LENGTH
PFD = PANEL FACE DIMENSION			

CUSTOMER: FIRESTONE BUILDING PRODUCTS		DRAWN BY: JWJ
FAB NUMBER: 13292	RELEASE: 5	SCALE: 1=1
MATERIAL: Aluminum		DATE: 06.25.14
THICKNESS: 0.125	DRAWING NO. NPD2007-004 Rel5 Clip Count.dwg	
FINISH: Mill Finish	PRE: ☐ POST: ☐	PAGE NO. P2

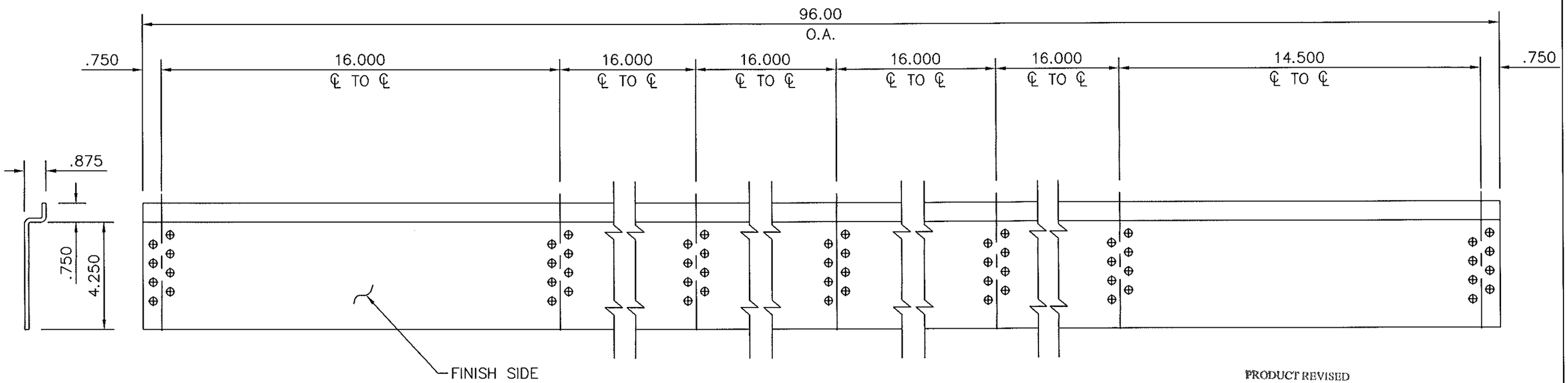

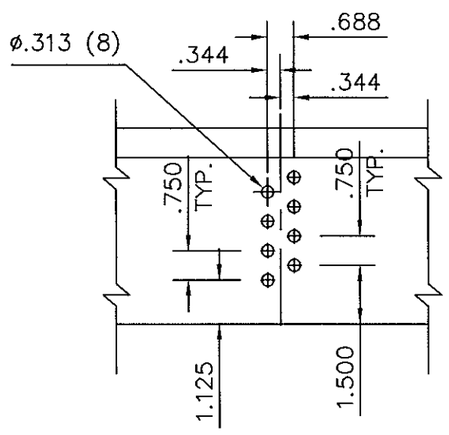

DESCRIPTION	"Z" SUBGRIT			
PART #	QTY.	LENGTH	FIELD APPLIED	SHOP APPLIED
P001	4	96.00		X

PRODUCT REVISED
as complying with the Florida
Building Code
Acceptance No 14-0416.02
Expiration Date 07/22/2019
By
Miami Dade Product Control

TRINITY ERD
BUILDING SCIENCE RESEARCH | DESIGN | CONSULTATION
353 Christian Street, Unit #13
Oxford, CT 06478
TEL: 203 262 9245
FAX: 203 262 9243
WWW.TRINITYERD.COM

ROBERT NIEMINEN
LICENSE
No 59166
06/26/2014
STATE OF FLORIDA
PROFESSIONAL ENGINEER

Firestone
BUILDING PRODUCTS
UNA-CLAD
NATIONWIDE 1-800-426-7737 LOCAL (763) 576-9595
Copyright © by Firestone Metal Products / UNA-CLAD

PANEL DESCRIPTION Series 3000

PANEL NUMBER	QTY.	WIDTH	LENGTH

PFD = PANEL FACE DIMENSION

CUSTOMER: FIRESTONE BUILDING PRODUCTS		DRAWN BY: JWJ
FAB NUMBER:13292	RELEASE: 5	SCALE:1=4
MATERIAL: GALV. STEEL		DATE: 06.25.14
THICKNESS: 8 Ga. (0.164)	DRAWING NO.NPD2007-004 Rel5 P001.dwg	
FINISH: N/A	PRE:☐POST☐	PAGE NO. P1

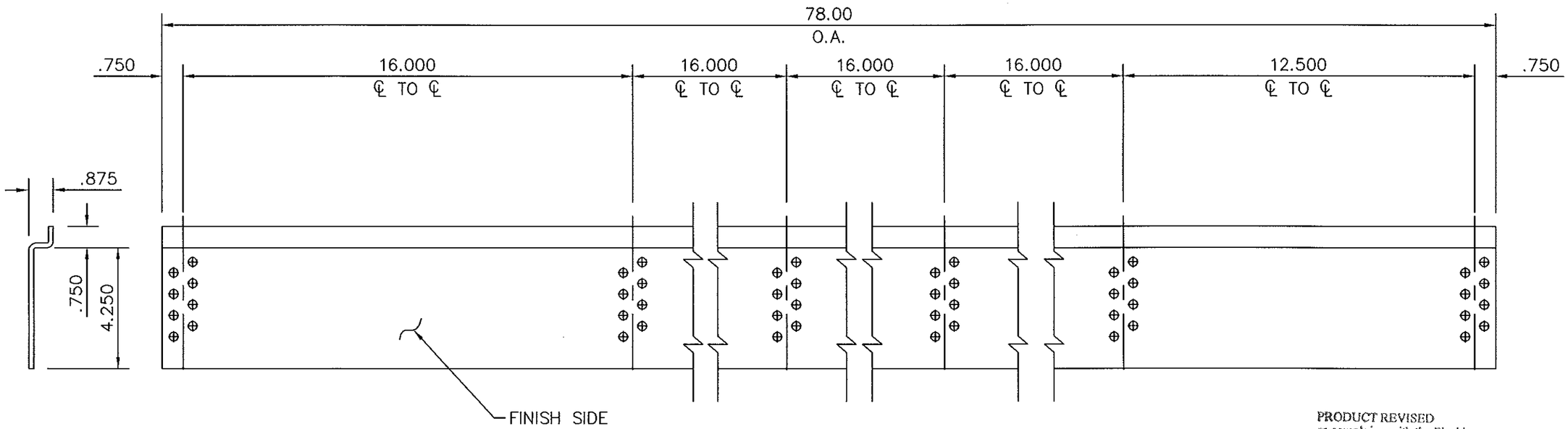

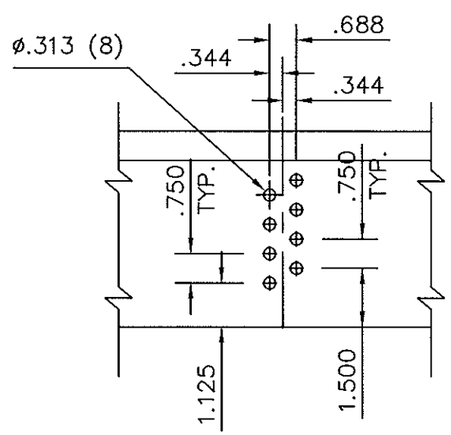

DESCRIPTION	"Z" REINFORCEMENT			
PART #	QTY.	LENGTH	FIELD APPLIED	SHOP APPLIED
P002	4	78.00		X

PRODUCT REVISED
as comptying with the Florida
Building Code
Acceptance No 14-0416.02
Expiration Date 07/22/2019
By
Miami Dade Product Control

TRINITY ERD
BUILDING SCIENCE RESEARCH | DESIGN | CONSULTATION

353 Christian Street, Unit #13
Oxford, CT 06478

TEL: 203 262 9245
FAX: 203 262 9243
WWW.TRINITYERD.COM

ROBERT NIEMINEN
LICENSE
No 59166
06/26/2014
STATE OF
FLORIDA
PROFESSIONAL ENGINEER

Firestone
BUILDING PRODUCTS
UNA-CLAD
NATIONWIDE 1-800-426-7737 LOCAL (763) 576-9595
Copyright © by Firestone Metal Products / UNA-CLAD

PANEL DESCRIPTION Series 3000				
PANEL NUMBER	QTY.	WIDTH	LENGTH	
PFD = PANEL FACE DIMENSION				

CUSTOMER: FIRESTONE BUILDING PRODUCTS		DRAWN BY: JWJ
FAB NUMBER:13292	RELEASE:5	SCALE:1=4
MATERIAL: GALV. STEEL		DATE: 06.25.14
THICKNESS: 8 Ga. (0.164)	DRAWING NO.NPD2007-004 Rel5 P002.dwg	
FINISH: N/A	PRE:☐POST☐	PAGE NO. P2

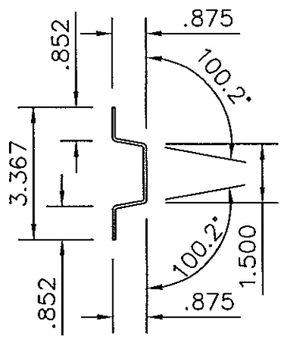

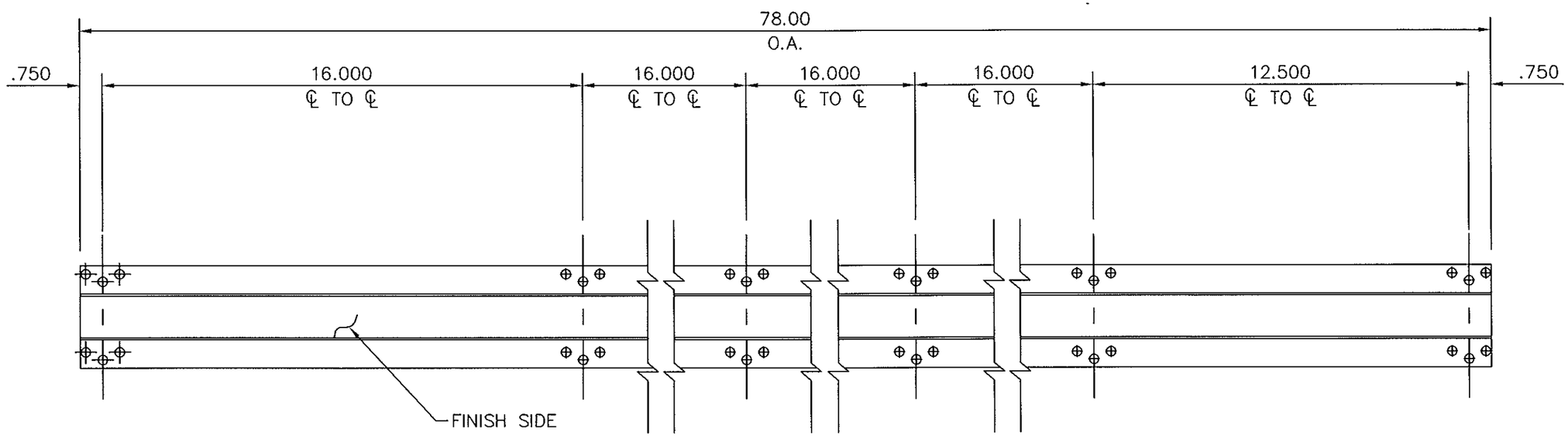

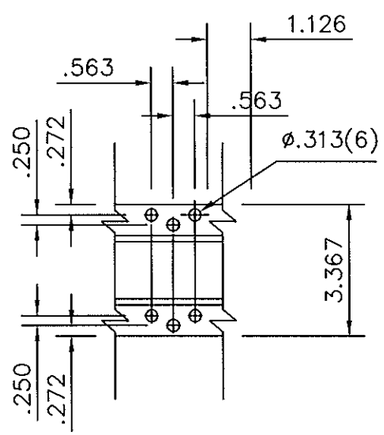

DESCRIPTION	HAT CHANNEL			
PART #	QTY.	LENGTH	FIELD APPLIED	SHOP APPLIED
P006	4	78.00		X

PRODUCT REVISED
as complying with the Florida
Building Code
Acceptance No 14-0416.02
Expiration Date 07/22/2019
By
Miami Dade Product Control

TRINITY ERD
BUILDING SCIENCE RESEARCH | DESIGN | CONSULTATION

353 Christian Street, Unit #13
Oxford, CT 06478

TEL: 203 262 9245
FAX: 203 262 9243
WWW.TRINITYERD.COM

ROBERT NIEMINEN
LICENSE
No 59166
06/24/2014
STATE OF
FLORIDA
PROFESSIONAL ENGINEER

Firestone
BUILDING PRODUCTS
UNA-CLAD
NATIONWIDE 1-800-426-7737 LOCAL (763) 576-9595
Copyright © by Firestone Metal Products / UNA-CLAD

PANEL DESCRIPTION Series 3000			
PANEL NUMBER	QTY.	WIDTH	LENGTH
PFD = PANEL FACE DIMENSION			

CUSTOMER: FIRESTONE BUILDING PRODUCTS		DRAWN BY: JWJ
FAB NUMBER:13292	RELEASE: 5	SCALE:1=4
MATERIAL: GALV. STEEL		DATE: 06.25.14
THICKNESS: 14 Ga. (0.075)	DRAWING NO.NPD2007-004 Rel5 P006.dwg	
FINISH: N/A	PRE:☐POST☐	PAGE NO. P6

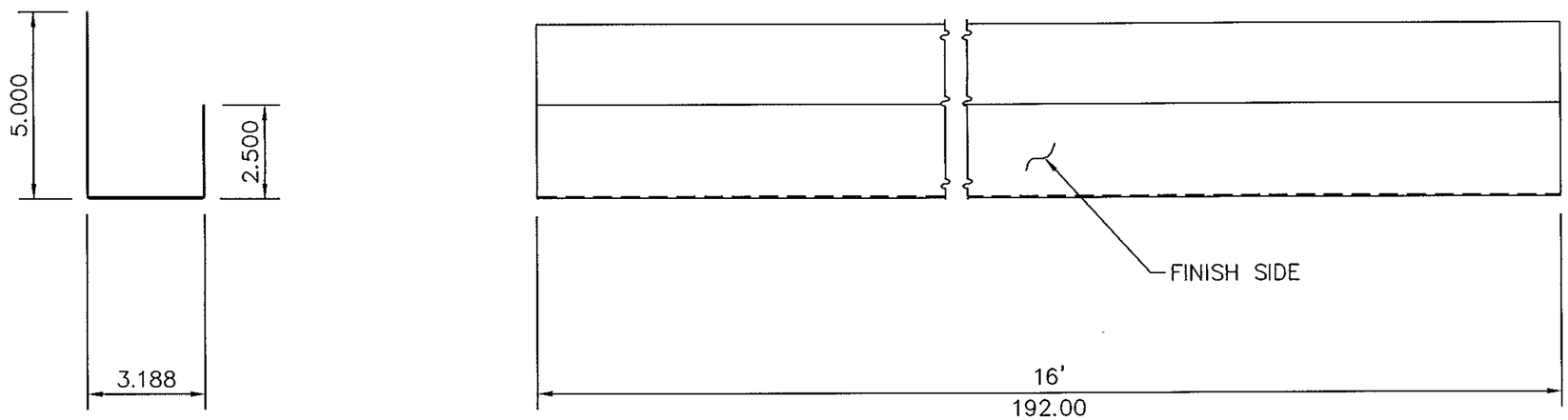

PRODUCT REVISED
as complying with the Florida
Building Code
Acceptance No 14-0416.02
Expiration Date 07/22/2019
By
Minxai Dado Product Control

DESCRIPTION	.040 ALUM FLASHING			
PART #	QTY.	LENGTH	FIELD APPLIED	SHOP APPLIED
P007	12	192.00		X

TRINITY ERD
BUILDING SCIENCE RESEARCH | DESIGN | CONSULTATION
353 Christian Street, Unit #13
Oxford, CT 06478
TEL: 203 262 9245
FAX: 203 262 9243
WWW.TRINITYERD.COM

ROBERT NIEMINEN
LICENSE
No 59166
06/26/2014
STATE OF
FLORIDA
PROFESSIONAL ENGINEER

Firestone
BUILDING PRODUCTS
UNA-CLAD
NATIONWIDE 1-800-426-7737 LOCAL (763) 576-9595
Copyright © by Firestone Metal Products / UNA-CLAD

PANEL DESCRIPTION Series 3000

PANEL NUMBER	QTY.	WIDTH	LENGTH

PFD = PANEL FACE DIMENSION

CUSTOMER: FIRESTONE BUILDING PRODUCTS		DRAWN BY: JWJ
FAB NUMBER:13292	RELEASE: 5	SCALE:1=4
MATERIAL: 3003-H14		DATE: 06.25.14
THICKNESS: .040	DRAWING NO.NPD2007-004 Rel5 P007.dwg	
FINISH: N/A	PRE:☐POST☐	PAGE NO. P7

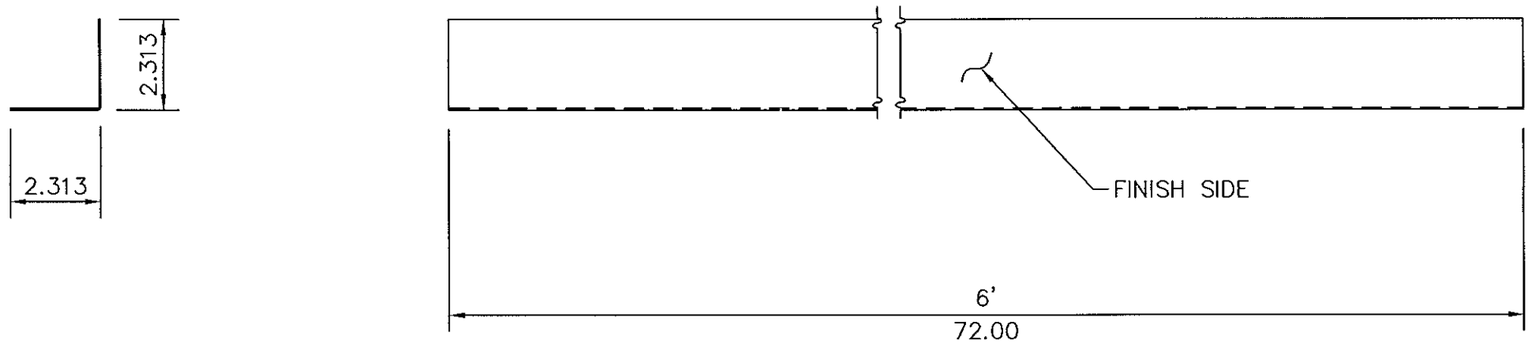

PRODUCT REVISED
as complying with the Florida
Building Code
Acceptance No 14-0416.02
Expiration Date 07/22/2019
By
Miami Dade Product Control

DESCRIPTION	.040 ALUM FLASHING			
PART #	QTY.	LENGTH	FIELD APPLIED	SHOP APPLIED
P008	4	72.00		X

TRINITY ERD
BUILDING SCIENCE RESEARCH | DESIGN | CONSULTATION

353 Christian Street, Unit #13
Oxford, CT 06478

TEL: 203 262 9245
FAX: 203 262 9243
WWW.TRINITYERD.COM

ROBERT NIEMINEN
LICENSE
No 59166
06/26/2014
STATE OF FLORIDA
PROFESSIONAL ENGINEER

Firestone BUILDING PRODUCTS
UNA-CLAD
NATIONWIDE 1-800-426-7737 LOCAL (763) 576-9595
Copyright © by Firestone Metal Products / UNA-CLAD

PANEL DESCRIPTION Series 3000			
PANEL NUMBER	QTY.	WIDTH	LENGTH
PFD = PANEL FACE DIMENSION			

CUSTOMER: FIRESTONE BUILDING PRODUCTS		DRAWN BY: JWJ
FAB NUMBER:13292	RELEASE: 5	SCALE:1=4
MATERIAL: 3003-H14		DATE: 06.25.14
THICKNESS: .040	DRAWING NO.NPD2007-004 Rel5 P008.dwg	
FINISH: N/A	PRE:☐POST☐	PAGE NO. P8