MIAMI-DADE COUNTY
PRODUCT CONTROL SECTION
11805 SW 26 Street, Room 208
Miami, Florida 33175-2474
T (786) 315-2590 F (786) 315-2599
www.miamidade.gov/economy

DEPARTMENT OF REGULATORY AND ECONOMIC RESOURCES (RER)
BOARD AND CODE ADMINISTRATION DIVISION

NOTICE OF ACCEPTANCE (NOA)

Premix - Marbletite Manufacturing Co. Inc.
1259 NW 21 Street
Pompano Beach FL 33069

SCOPE:

This NOA is being issued under the applicable rules and regulations governing the use of construction materials. The documentation submitted has been reviewed and accepted by Miami-Dade County RER-Product Control Section to be used in Miami Dade County and other areas where allowed by the Authority Having Jurisdiction (AHJ).

This NOA shall not be valid after the expiration date stated below. The Miami-Dade County Product Control Section (In Miami Dade County) and/or the AHJ (in areas other than Miami Dade County) reserve the right to have this product or material tested for quality assurance purposes. If this product or material fails to perform in the accepted manner, the manufacturer will incur the expense of such testing and the AHJ may immediately revoke, modify, or suspend the use of such product or material within their jurisdiction. RER reserves the right to revoke this acceptance, if it is determined by Miami-Dade County Product Control Section that this product or material fails to meet the requirements of the applicable building code.

This product is approved as described herein, and has been designed to comply with the Florida Building Code, including the High Velocity Hurricane Zone.

DESCRIPTION: P.M. Concentrate over 5/8" Plywood Sheathing – L.M.I.

APPROVAL DOCUMENT: Drawing **1363,** titled "P.M. Concentrate Single Coat Stucco System over 5/8" Plywood Sheathing", sheets 1 through 4 of 4, dated 10/19/2005, with revision A1 dated 05/12/2010, prepared by W.W. Schaefer Engineering & Consulting P.A., signed and sealed by Warren W. Schaefer, P.E., bearing the Miami-Dade County Product Control revision stamp with the Notice of Acceptance number and expiration date by the Miami-Dade County Product Control Section.

MISSILE IMPACT RATING: Large Missile Impact Resistant

LABELING: Each component shall bear a permanent label with the manufacturer's name or logo, city, state and following statement: "Miami-Dade County Product Control Approved", unless otherwise noted herein.

RENEWAL of this NOA shall be considered after a renewal application has been filed and there has been no change in the applicable building code negatively affecting the performance of this product.

TERMINATION of this NOA will occur after the expiration date or if there has been a revision or change in the materials, use, and/or manufacture of the product or process. Misuse of this NOA as an endorsement of any product, for sales, advertising or any other purposes shall automatically terminate this NOA. Failure to comply with any section of this NOA shall be cause for termination and removal of NOA.

ADVERTISEMENT: The NOA number preceded by the words Miami-Dade County, Florida, and followed by the expiration date may be displayed in advertising literature. If any portion of the NOA is displayed, then it shall be done in its entirety.

INSPECTION: A copy of this entire NOA shall be provided to the user by the manufacturer or its distributors and shall be available for inspection at the job site at the request of the Building Official.

This NOA **revises NOA # 11-1110.03** and consists of this page 1 and evidence page E-1, as well as approval document mentioned above.

The submitted documentation was reviewed by **Carlos M. Utrera, P.E.**

MIAMI-DADE COUNTY APPROVED

06/05/2014

NOTICE OF ACCEPTANCE: EVIDENCE SUBMITTED

A. DRAWINGS ***"Submitted under NOA # 10-0518.15"***

1. Drawing No. **1363,** titled "P.M. Concentrate Single Coat Stucco System over 5/8" Plywood Sheathing", sheets 1 through 4 of 4, dated 10/19/2005, with revision A1 dated 05/12/2010, prepared by W.W. Schaefer Engineering & Consulting P.A., signed and sealed by Warren W. Schaefer, P.E.

B. TESTS ***"Submitted under NOA # 05-0324.03"***

1. Test reports on 1) Air Infiltration Test, per FBC, TAS 202-94
   2) Uniform Static Air Pressure Test, Loading per FBC TAS 202-94
   3) Water Resistance Test, per FBC, TAS 202-94
   4) Small Missile Impact Test per FBC, TAS 201-94
   5) Cyclic Wind Pressure Loading per FBC, TAS 203-94

   along with marked-up drawings and installation diagram of Stucco Wall Panels Specimens # S1-1, S1-2, S2-1 and S4-1, dated 10/28/2004 and Specimens # S2-2, S2-3, S3-1 and S3-2, dated 12/23/2004, both prepared by Hurricane Test Laboratory, LLC, Test Report No. **0235-0508-04**, signed and sealed by Vinu J. Abraham, P.E.

C. CALCULATIONS

1. None.

D. QUALITY ASSURANCE

1. Miami-Dade Department of Regulatory and Economic Resources (RER)

E. MATERIAL CERTIFICATIONS

1. None.

F. STATEMENTS

1. Statement letter of code conformance to 2010 FBC and 5th edition (2014), prepared by W.W. Schaefer Engineering & Consulting, P.A., dated 04/10/2014, signed and sealed by Warren W. Schaefer, P.E.

   "Submitted under NOA # 11-1110.03"

2. No financial interest letter prepared by W. W. Schaefer Engineering & Consulting, P.A., dated 11/01/2011, signed and sealed by Warren W. Schaefer, P.E.

06/05/2014

Carlos M. Utrera, P.E.
Product Control Examiner
NOA No. 14-0423.12
Expiration Date: December 08, 2015
Approval Date: June 12, 2014

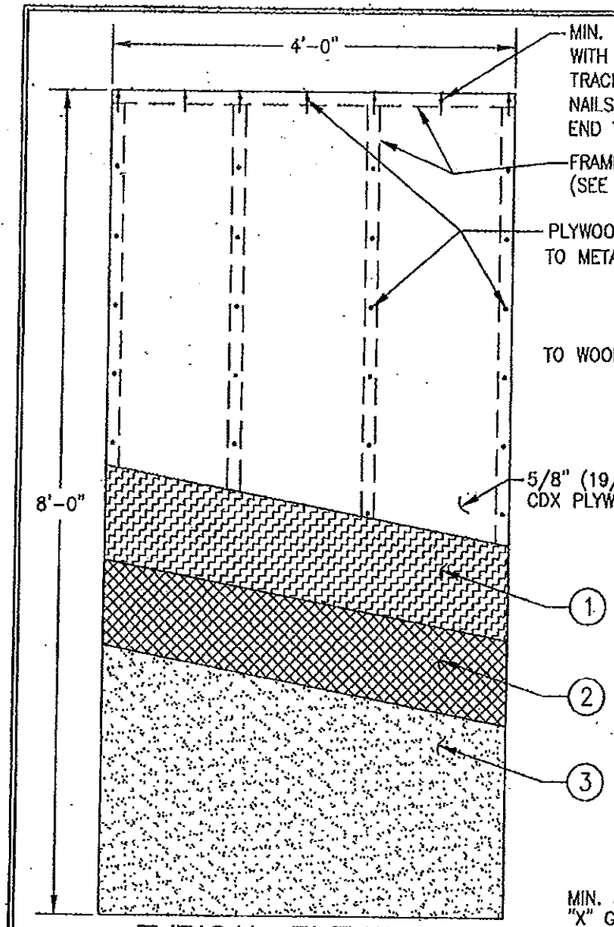

TYPICAL ELEVATION

DIMENSIONS SHOWN ARE TESTED DIMENSIONS

PRODUCT RENEWED
as complying with the Florida Building Code
Acceptance No 10-0518.15
Expiration Date 12/08/2015
By
Miami Dade Product Control Division

PRODUCT REVISED
as complying with the Florida Building Code
Acceptance No 11-1110.03
Expiration Date 12/08/2015
By
Miami Dade Product Control

PRODUCT REVISED
as complying with the Florida Building Code
Acceptance No 14-0423.12
Expiration Date 12/08/2015
By
Miami Dade Product Control

ALLOWABLE DESIGN PRESSURE	
POSITIVE	NEGATIVE
80 PSF	80 PSF
LARGE MISSILE IMPACT APPROVED	

GENERAL NOTES:

1. THIS SYSTEM HAS BEEN DESIGNED IN ACCORDANCE WITH THE FLORIDA BUILDING CODE (FBC) FOR USE IN HIGH VELOCITY HURRICANE ZONES (HVHZ)
2. THIS SYSTEM HAS BEEN TESTED IN ACCORDANCE WITH PROTOCALS TAS 201 TAS 202 & TAS 203 FOR LARGE MISSLE IMPACT, AIR, WATER, STRUCTURAL & CYCLIC LOAD TESTING.
3. THIS SYSTEM SHALL BE APPLIED BY A LICENSED PLASTERING CONTRACTOR FOLLOWING THIS NOTICE OF ACCEPTANCE, THE RECOMMENDATIONS OF PREMIX MARBLETITE, AND SECTION 2512 OF THE FLORIDA BUILDING CODE.
4. THE ENGINEER AND/OR ARCHITECT OF RECORD FOR EACH PROJECT USING THIS SYSTEM SHALL DESIGN THE SUPPORTING STUD FRAMING, SHEATHING & THEIR ATTACHMENTS AS REQUIRED TO MEET CODE AND SUPPORT REQUIRED DESIGN PRESSURES AND TO INSURE CONFORMANCE WITH ALL REQUIRED STUD DEFLECTION & STRESS LIMITATIONS AS REQUIRED BY ALL GOVERNING CODES & THIS DOCUMENT.
5. MAXIMUM ALLOWABLE DEFLECTION FOR THIS ASSEMBLY SHALL BE LIMITED BY THE LESSOR OF L/240 OR AS REQUIRED BY CODE.
6. THIS SYSTEM IS A LARGE MISSILE IMPACT APPROVED SYSTEM PROVIDING IT IS INSTALLED OVER THE 5/8" PLYWOOD SHEATHING SPECIFIED.
7. THIS STUCCO SYSTEM SHALL NOT BE CONSIDERED TO OR BE USED FOR TRANSFER OF DIAPHRAM ACTION OF WALL TO STRUCTURE.
8. DETAILS ON SHEETS 2 & 3 ARE TYPICAL AND SHOW INTENT TO PREVENT WATER INFILTRATION INTO AND BEHIND THIS SYSTEM. ALTERNATE DETAILING AND SPECIFIC CONDITIONS NOT COVERED BY THE TYPICAL DETAILS ARE THE RESPONSIBILITY OF THE LICENSED DESIGN PROFESSIONAL IN CONSULTATION WITH PREMIX-MARBLETITE.
9. THIS APPROVAL DOES NOT INCLUDE HORIZONTAL USE OF THIS SYSTEM. IT ONLY INCLUDES WALL APPLICATION.
10. INCREASE OF STRESSES AND/OR ALLOWABLE ANCHOR LOADS DUE TO WIND PRESSURE HAVE NOT BEEN USED WITH THIS APPROVAL EXCEPT FOR WOOD FASTENERS.

MATERIAL LIST

NUMBER	ITEM	SUPPLIER	NOTES
1	MOISTURE BARRIER (ASTM D226)	N/A	STANDARD 15 LB. ASPHALT ROOFING FELT SECURED TO PLYWOOD WITH 1 1/4" STAPLES AT 16" O.C. IN BOTH DIRECTIONS. OVERLAP SHALL BE MINIMUM OF 2".
2	METAL LATH (ASTM C847)	N/A	GALVANIZED 2.5 LB/SQ. YD. METAL LATH IN ACCORDANCE WITH FLORIDA BUILDING CODE CHAPTER 25. FASTEN TO SHEATHING & METAL STUDS WITH #8 X 1 1/4" ZINK PLATED SPACE THREADED SCREWS AND TO SHEATHING AND WOOD STUDS WITH 1 1/4" STAPLES. FASTENERS SHALL BE PLACED PER CODE BUT NOT TO EXCEED 6" O.C. ALONG EACH STUD & PERIMETER FRAMING MEMBER.
3	MIN. 1/2" THICK P.M. CONCENTRATE FIBER REINFORCED STUCCO APPLIED WITH TROWEL	PREMIX MARBLETITE	STUCCO IN ACCORDANCE WITH FLORIDA BUILDING CODE CHAPTER 25 & ASTM C926 PREMIXED & FACTORY BLENDED COMPOUND WITH CHOPPED TYPE "E" GLASS OR POLYPROPYLENE FIBERS. COMPOUND IS MIXED WITH WATER & SAND ON THE JOB SITE AT A RATIO OF ONE(1) 80 LB. BAG OF COMPOUND TO 240 LBS OF SAND AND 5 TO 6 GALLONS OF WATER.

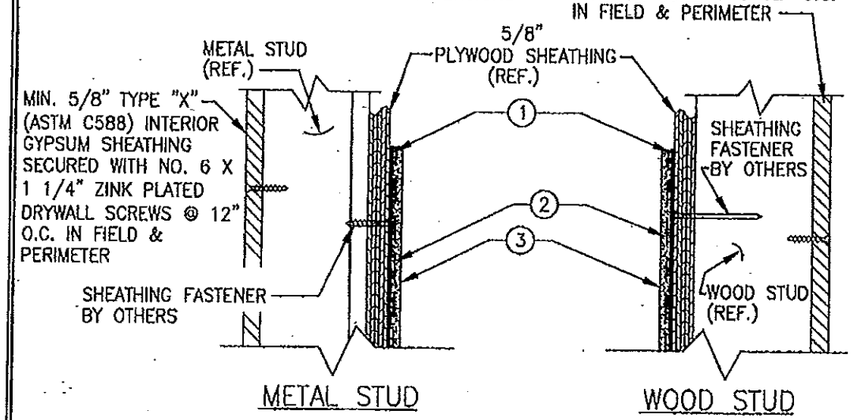

TYPICAL SECTION

FRAMING NOTES:

1. WOOD STUD FRAMING SHALL BE MIN. 2X4 GRADE 2 SOUTHERN YELLOW PINE WITH SPECIFIC GRAVITY OF 0.55 OR GREATER.
2. STEEL STUD (ASTM C955) FRAMING SHALL BE MIN. 3 5/8" X 20 GA. STUDS WITH 1 1/2" FLANGES AND 1/2" RETURNS (Fy = 33 KSI MIN.)
3. ALL STEEL TRACK (ASTM C955) SHALL BE MIN. 3 5/8" X 20 GA. (Fy = 33 KSI MIN.) WITH MIN. 1 1/4" FLANGES.
4. ALL STUD FRAMING SHALL BE AT MAX. 16" O.C.

WARREN W. SCHAEFER LICENSE No. 44135 STATE OF FLORIDA PROFESSIONAL ENGINEER

MAY 1 2 2010

NO.	REVISION DESCRIPTION	BY	DATE
A1	UPDATE TO PRESENT STANDARDS	WWS	05/12/10

DRAWN BY: W.R.M. | CHECKED BY: W.W.S. | PLOT: 1=16 | DATE: 10/19/05

DRAWING TITLE: P.M. CONCENTRATE SINGLE COAT STUCCO SYSTEM OVER 5/8" PLYWOOD SHEATHING

MANUFACTURER: PREMIX MARBLETITE MFG., CO

ARCHITECTURAL FINISHING SYSTEMS
1259 N.W. 21ST STREET
POMPANO BEACH, FL 33069
800-432-5097

CONSULTANTS: W. W. SCHAEFER ENGINEERING & CONSULTING, P.A.
7480 150TH COURT NORTH
PALM BEACH GARDENS, FL 33418
PHONE: 561-744-3424

WARREN W. SCHAEFER, P.E.
P.E. NO. 44135

DRAWING NO. 1363 | REV. A

SHEET NO. 1 OF 4

PRODUCT REVISED
as complying with the Florida Building Code
Acceptance No 11-1110.03
Expiration Date 12/08/2015
By
Miami Dade Product Control

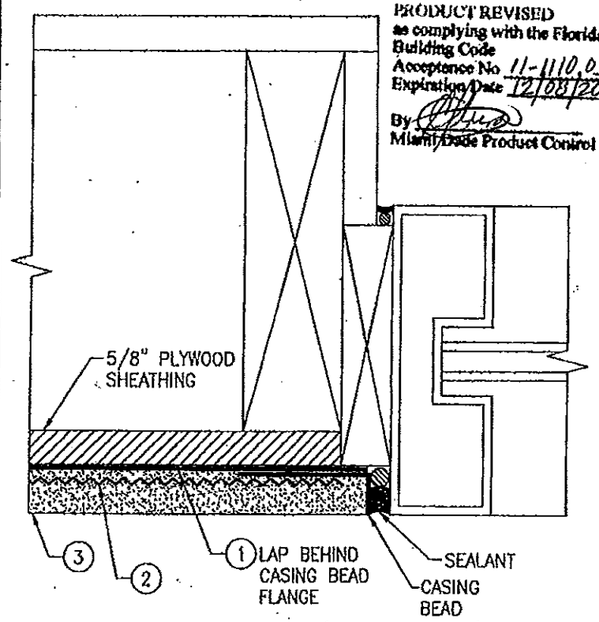

TYPICAL WINDOW/DOOR JAMB & SILL FLUSH MOUNT DETAIL WITHOUT NAIL FIN

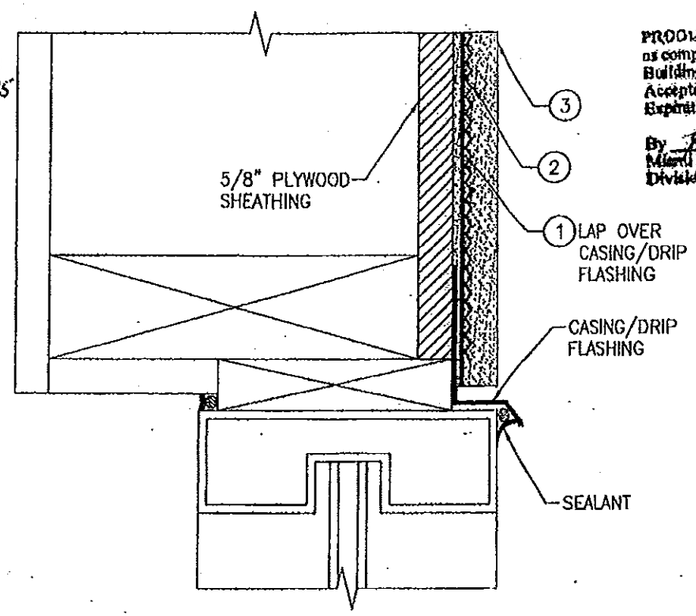

TYPICAL WINDOW/DOOR HEAD FLUSH MOUNT DETAIL WITHOUT NAIL FIN

PRODUCT RENEWED
as complying with the Florida Building Code
Acceptance No 10-0518.15
Expiration Date 12/08/2015
By
Miami Dade Product Control Division

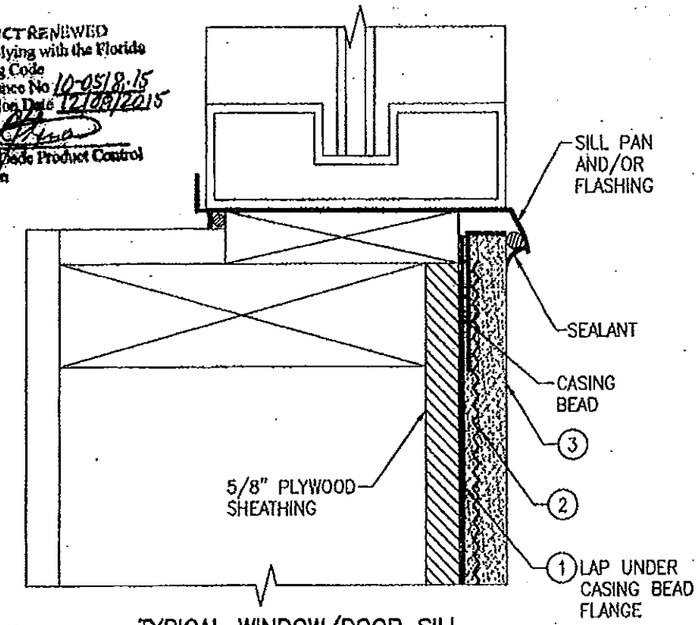

TYPICAL WINDOW/DOOR SILL FLUSH MOUNT DETAIL WITHOUT NAIL FIN

PRODUCT REVISED
as complying with the Florida Building Code
Acceptance No 14-0423.12
Expiration Date 12/08/2015
By
Miami Dade Product Control

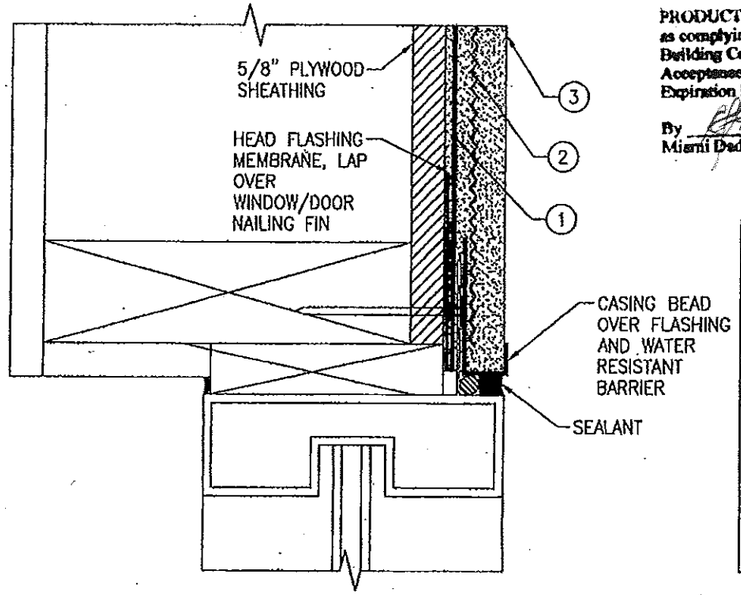

TYPICAL WINDOW/DOOR HEAD & JAMB FLUSH MOUNT DETAIL WITHT NAIL FIN

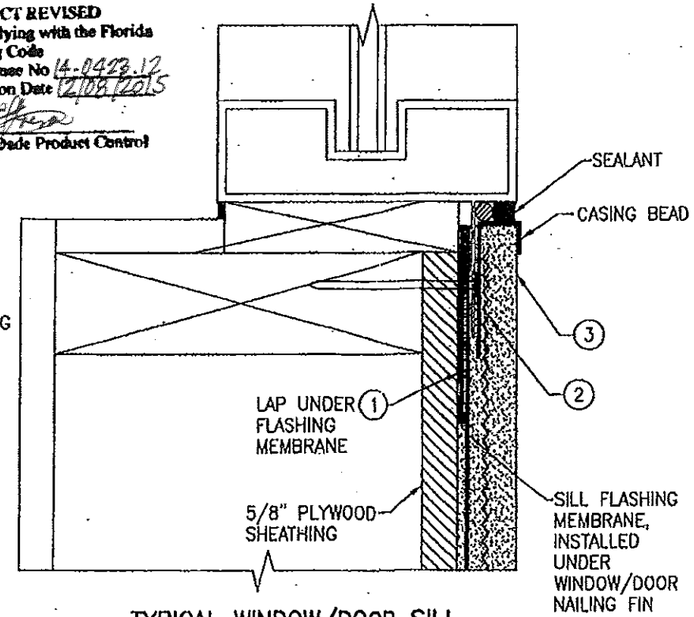

TYPICAL WINDOW/DOOR SILL FLUSH MOUNT DETAIL WITH NAIL FIN

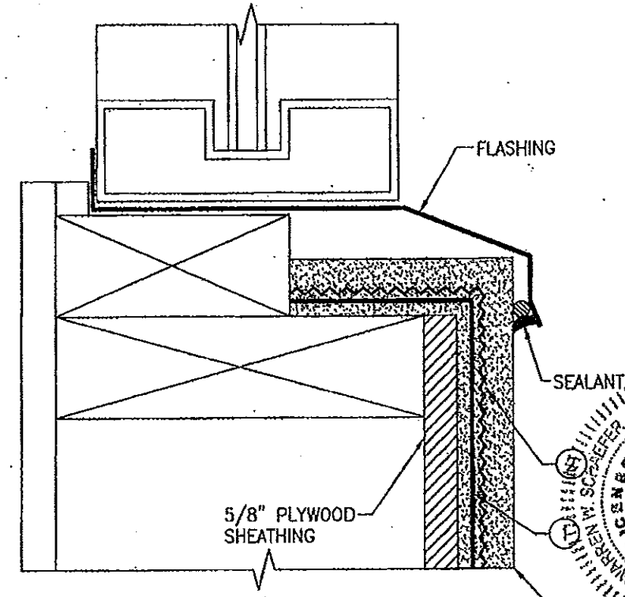

TYPICAL WINDOW/DOOR SILL RECESSED MOUNT DETAIL WITHOUT NAIL FIN

NO.	REVISION DESCRIPTION	BY	DATE

DRAWN BY: W.R.M. | CHECKED BY: W.W.S.
PLOT: 1=2 | DATE: 10/18/05

DRAWING TITLE
P.M. CONCENTRATE SINGLE COAT STUCCO SYSTEM OVER 5/8" PLYWOOD SHEATHING

MANUFACTURER
PREMIX MARBLETITE MFG. CO
ARCHITECTURAL FINISHING SYSTEMS
1259 N.W. 21ST STREET
POMPANO BEACH, FL 33069
800-432-5097

CONSULTANTS
W. W. SCHAEFER ENGINEERING & CONSULTING, P.A.
7480 150TH COURT NORTH
PALM BEACH GARDENS, FL 33418
PHONE: 561-744-3424

CERTIFICATION NO. 44135
MAY 18 2010
STATE OF FLORIDA
WARREN W. SCHAEFER
LICENSE
PROJECT

DRAWING NO. 1363 | REV. A
SHEET NO. 2 OF 4

PRODUCT REVISED
as complying with the Florida
Building Code
Acceptance No 11-1110.03
Expiration Date 12/08/2015
By
Miami Dade Product Control

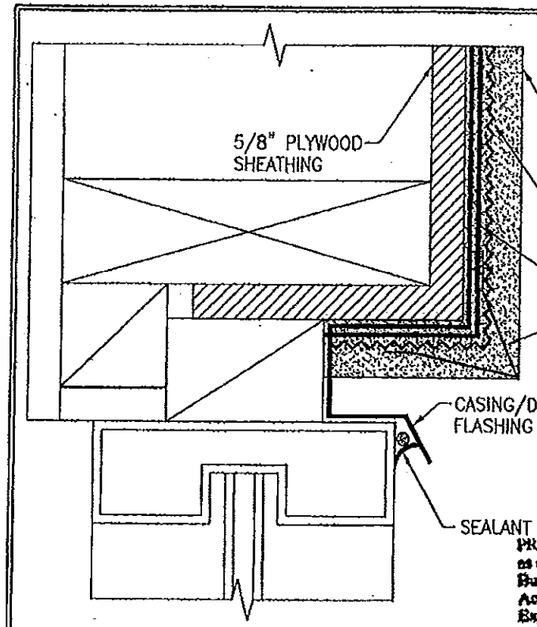

TYPICAL WINDOW/DOOR HEAD & JAMB RECESSED MOUNT DETAIL WITHOUT NAIL FIN

PRODUCT RENEWED
as complying with the Florida
Building Code
Acceptance No 10-0518.15
Expiration Date 12/08/2015
By
Miami Dade Product Control
Division

PRODUCT REVISED
as complying with the Florida
Building Code
Acceptance No 14-0423.12
Expiration Date 12/08/2015
By
Miami Dade Product Control

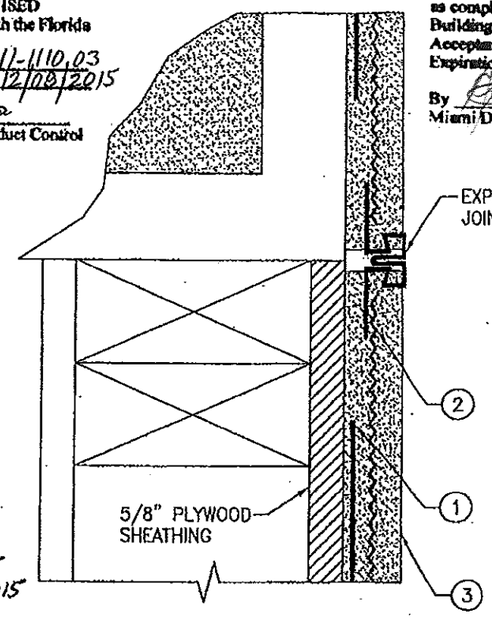

TYPICAL VERTICAL EXPANSION JOINT

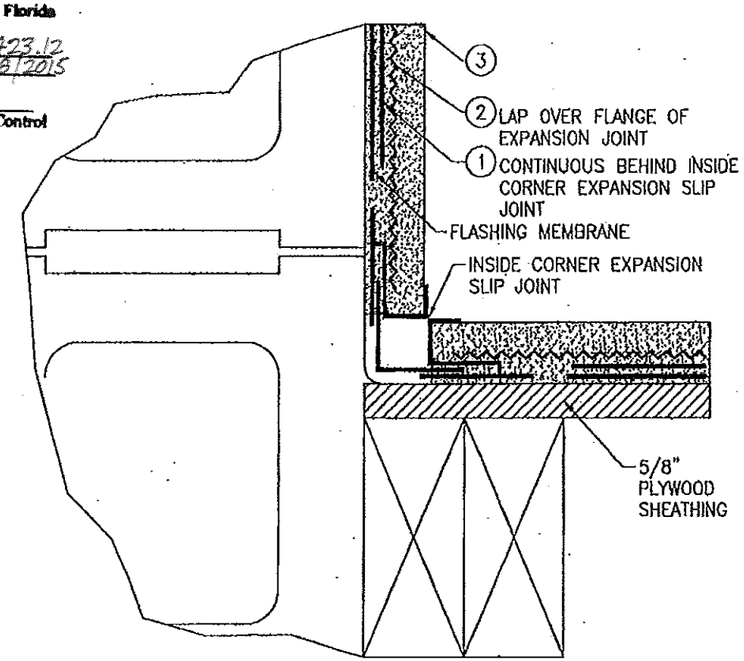

TYPICAL INSIDE CORNER EXPANSION JOINT DETAIL 1

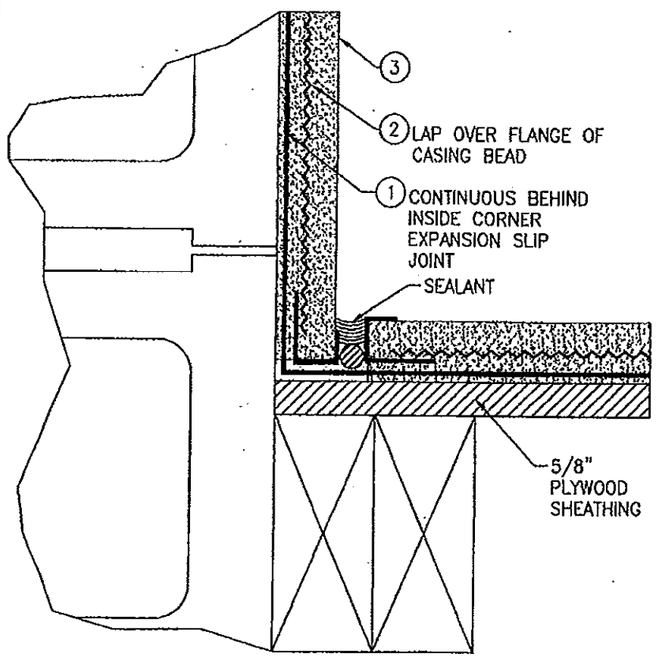

TYPICAL INSIDE CORNER EXPANSION JOINT DETAIL 2

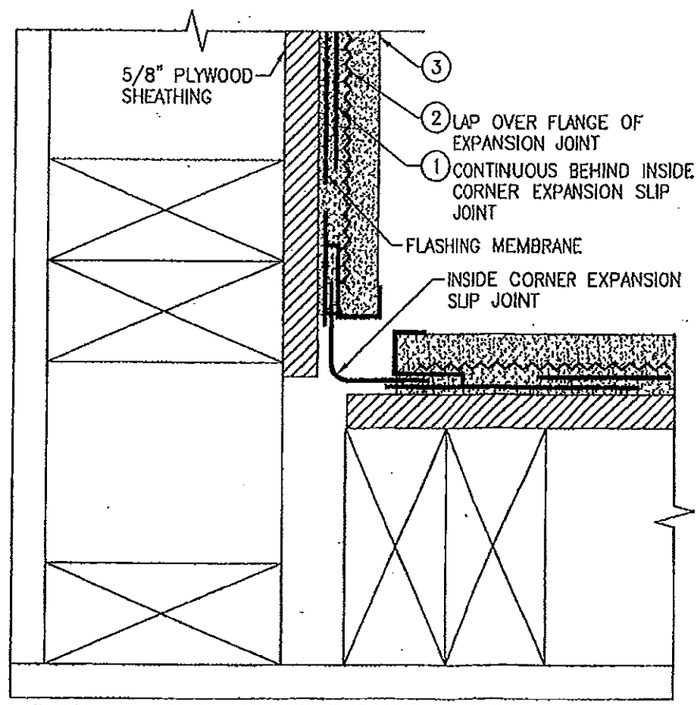

TYPICAL INSIDE CORNER EXPANSION JOINT DETAIL 3

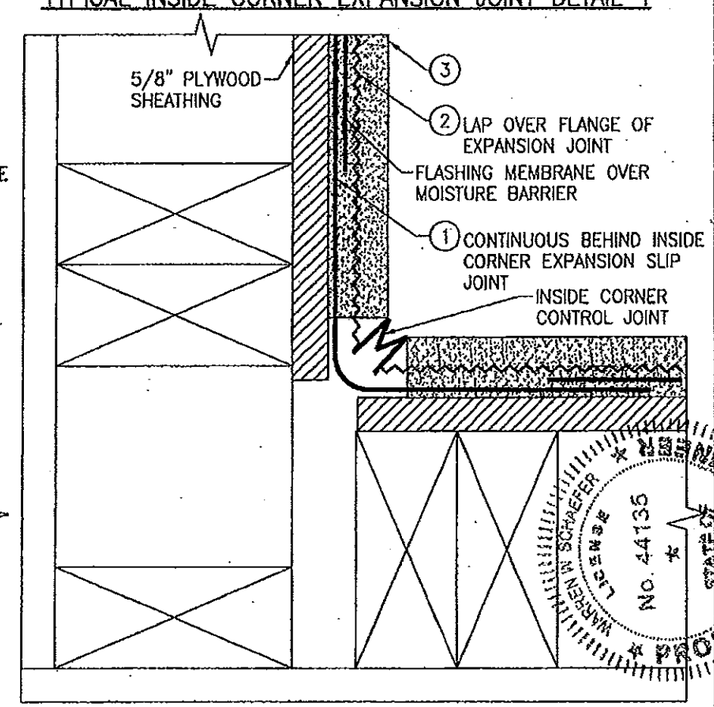

TYPICAL INSIDE CORNER CONTROL JOINT

NO.	REVISION DESCRIPTION	BY	DATE

DRAWN BY: W.R.H. | CHECKED BY: W.W.S.
PLOT: 1=2 | DATE: 10/19/05

DRAWING TITLE: P.M. CONCENTRATE SINGLE COAT STUCCO SYSTEM OVER 5/8" PLYWOOD SHEATHING

MANUFACTURER: PREMIX MARBLETITE MFG. CO.
ARCHITECTURAL FINISHING SYSTEMS
1259 N.W. 21ST STREET
POMPANO BEACH, FL 33069
800-432-5097

CONSULTANTS: W. W. SCHAEFER ENGINEERING & CONSULTING, P.A.
7490 150TH COURT NORTH
PALM BEACH GARDENS, FL 33418
PHONE: 561-744-3424

CERTIFICATION: STATE OF FLORIDA
WARREN W. SCHAEFER
LICENSE No. 44135
PROFESSIONAL ENGINEER
WARREN W. SCHAEFER, P.E.
P.E. NO. 44135

DRAWING NO. 1363 | REV. A
SHEET NO. 3 OF 4

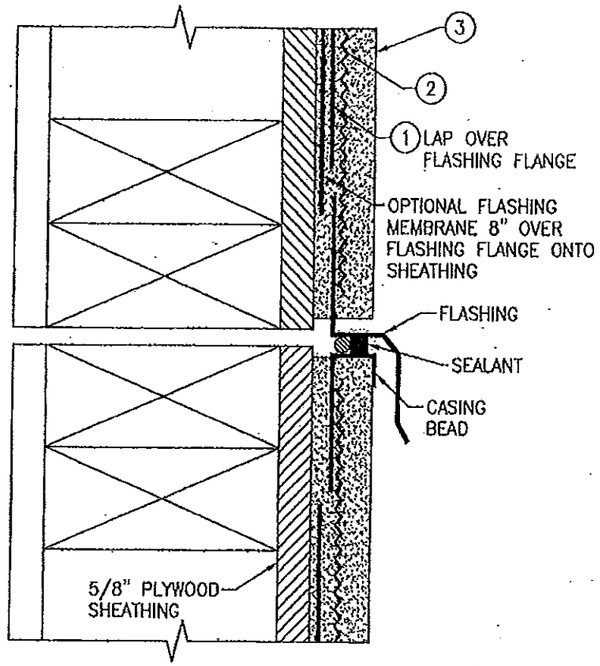

TYPICAL HORIZONTAL EXPANSION JOINT

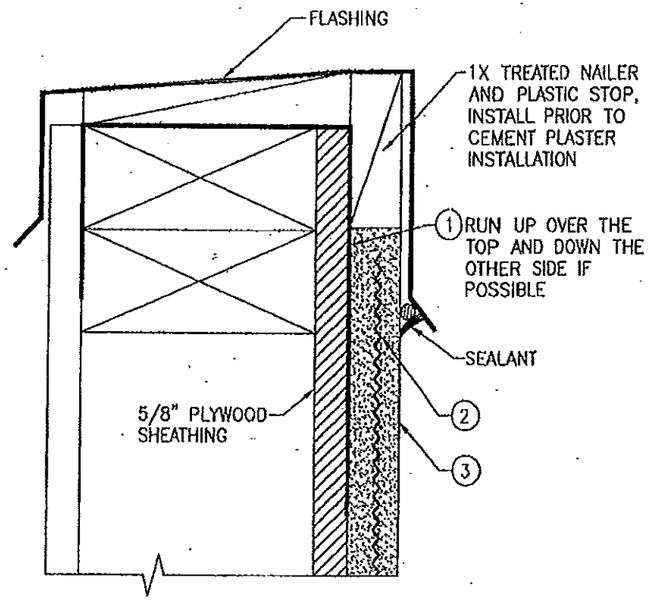

TYPICAL PARAPET COPING DETAIL

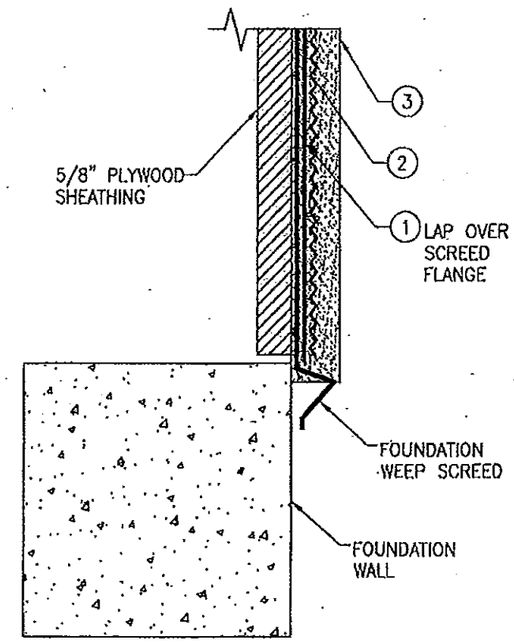

TYPICAL WEEP SCREED FOUNDATION AT CONCRETE

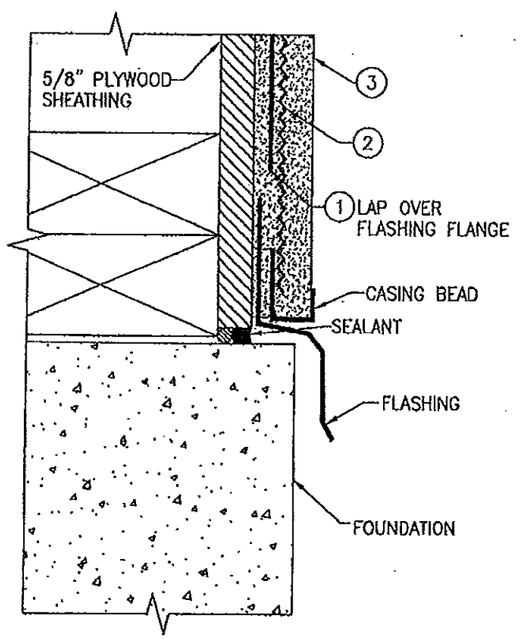

TYPICAL TERMINATION AT FOUNDATION

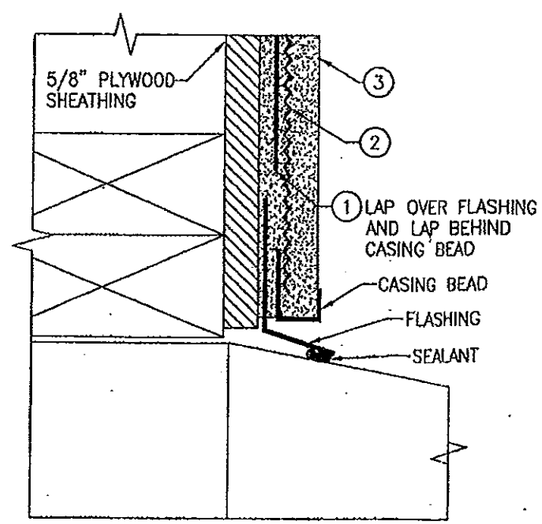

TYPICAL TERMINATION AT SLAB/SIDEWALK

PRODUCT REVISED
as complying with the Florida Building Code
Acceptance No 11-0423.12
Expiration Date 12/08/2015
By
Miami Dade Product Control

PRODUCT REVISED
as complying with the Florida Building Code
Acceptance No 11-1110.03
Expiration Date 12/08/2015
By
Miami Dade Product Control

PRODUCT RENEWED
as complying with the Florida Building Code
Acceptance No 10-0518.15
Expiration Date 12/08/2015
By
Miami Dade Product Control Division

WARREN W. SCHAEFER P.E. No. 44135 STATE OF FLORIDA PROFESSIONAL ENGINEER

DRAWN BY: W.R.M.	CHECKED BY: W.W.S.
PLOT: 1=2	DATE: 10/19/05

NO.	REVISION DESCRIPTION	BY	DATE

DRAWING TITLE
P.M. CONCENTRATE SINGLE COAT STUCCO SYSTEM OVER 5/8" PLYWOOD SHEATHING

MANUFACTURER
PREMIX MARBLETTE MFG. CO
ARCHITECTURAL FINISHING SYSTEMS
1259 N.W. 21ST STREET
POMPANO BEACH, FL 33069
800-432-5097

CONSULTANTS
W. W. SCHAEFER ENGINEERING & CONSULTING, P.A.
7480 130TH COURT NORTH
PALM BEACH GARDENS, FL 33418
PHONE: 561-744-3424

CERTIFICATION
MAY 1 8 2010
WARREN W. SCHAEFER, P.E.
P.E. NO. 44135

DRAWING NO.	REV.
1363	A

SHEET NO.
4 OF 4